AUTHENTICATED
U.S. GOVERNMENT
INFORMATION
GPO

FEDERAL REGISTER

Vol. 76 Friday,

No. 166 August 26, 2011

Pages 53301–53630

OFFICE OF THE FEDERAL REGISTER

The **FEDERAL REGISTER** (ISSN 0097–6326) is published daily, Monday through Friday, except official holidays, by the Office of the Federal Register, National Archives and Records Administration, Washington, DC 20408, under the Federal Register Act (44 U.S.C. Ch. 15) and the regulations of the Administrative Committee of the Federal Register (1 CFR Ch. I). The Superintendent of Documents, U.S. Government Printing Office, Washington, DC 20402 is the exclusive distributor of the official edition. Periodicals postage is paid at Washington, DC.

The **FEDERAL REGISTER** provides a uniform system for making available to the public regulations and legal notices issued by Federal agencies. These include Presidential proclamations and Executive Orders, Federal agency documents having general applicability and legal effect, documents required to be published by act of Congress, and other Federal agency documents of public interest.

Documents are on file for public inspection in the Office of the Federal Register the day before they are published, unless the issuing agency requests earlier filing. For a list of documents currently on file for public inspection, see *www.ofr.gov.*

The seal of the National Archives and Records Administration authenticates the Federal Register as the official serial publication established under the Federal Register Act. Under 44 U.S.C. 1507, the contents of the **Federal Register** shall be judicially noticed.

The **Federal Register** is published in paper and on 24x microfiche. It is also available online at no charge at *www.fdsys.gov*, a service of the U.S. Government Printing Office.

The online edition of the **Federal Register** is issued under the authority of the Administrative Committee of the Federal Register as the official legal equivalent of the paper and microfiche editions (44 U.S.C. 4101 and 1 CFR 5.10). It is updated by 6:00 a.m. each day the **Federal Register** is published and includes both text and graphics from Volume 59, 1 (January 2, 1994) forward. For more information, contact the GPO Customer Contact Center, U.S. Government Printing Office. Phone 202-512-1800 or 866-512-1800 (toll free). E-mail, *gpo@custhelp.com.*

The annual subscription price for the **Federal Register** paper edition is $749 plus postage, or $808, plus postage, for a combined **Federal Register, Federal Register** Index and List of CFR Sections Affected (LSA) subscription; the microfiche edition of the **Federal Register** including the **Federal Register** Index and LSA is $165, plus postage. Six month subscriptions are available for one-half the annual rate. The prevailing postal rates will be applied to orders according to the delivery method requested. The price of a single copy of the daily **Federal Register,** including postage, is based on the number of pages: $11 for an issue containing less than 200 pages; $22 for an issue containing 200 to 400 pages; and $33 for an issue containing more than 400 pages. Single issues of the microfiche edition may be purchased for $3 per copy, including postage. Remit check or money order, made payable to the Superintendent of Documents, or charge to your GPO Deposit Account, VISA, MasterCard, American Express, or Discover. Mail to: U.S. Government Printing Office—New Orders, P.O. Box 979050, St. Louis, MO 63197-9000; or call toll free 1-866-512-1800, DC area 202-512-1800; or go to the U.S. Government Online Bookstore site, see *bookstore.gpo.gov.*

There are no restrictions on the republication of material appearing in the **Federal Register.**

How To Cite This Publication: Use the volume number and the page number. Example: 76 FR 12345.

Postmaster: Send address changes to the Superintendent of Documents, Federal Register, U.S. Government Printing Office, Washington, DC 20402, along with the entire mailing label from the last issue received.

SUBSCRIPTIONS AND COPIES

PUBLIC

Subscriptions:

Paper or fiche	**202–512–1800**
Assistance with public subscriptions	**202–512–1806**

General online information **202–512–1530; 1–888–293–6498**

Single copies/back copies:

Paper or fiche	**202–512–1800**
Assistance with public single copies	**1–866–512–1800 (Toll-Free)**

FEDERAL AGENCIES

Subscriptions:

Paper or fiche	**202–741–6005**
Assistance with Federal agency subscriptions	**202–741–6005**

Printed on recycled paper.

Contents

Federal Register

Vol. 76, No. 166

Friday, August 26, 2011

Agricultural Research Service
NOTICES
Agency Information Collection Activities; Proposals, Submissions, and Approvals, 53397–53398

Agriculture Department
See Agricultural Research Service
See Economic Research Service
See Forest Service

Air Force Department
NOTICES
Privacy Act; Systems of Records, 53421–53422

Army Department
See Engineers Corps

Blind or Severely Disabled, Committee for Purchase From People Who Are
See Committee for Purchase From People Who Are Blind or Severely Disabled

Bureau of Ocean Energy Management, Regulation and Enforcement

NOTICES
Environmental Impact Statements; Availability, etc.:
Outer Continental Shelf, Alaska OCS Region, Chukchi Sea Planning Area, Oil and Gas Lease Sale 193, 53481–53482

Census Bureau
NOTICES
Agency Information Collection Activities; Proposals, Submissions, and Approvals:
Quarterly Survey of Public Pensions, 53402–53403

Centers for Disease Control and Prevention
NOTICES
Meetings:
Board of Scientific Counselors, Office of Public Health Preparedness and Response, 53474

Centers for Medicare & Medicaid Services
NOTICES
Agency Information Collection Activities; Proposals, Submissions, and Approvals, 53474–53475
Meetings:
Medicare Evidence Development and Coverage Advisory Committee, 53475–53478

Civil Rights Commission
NOTICES
Meetings:
Iowa Advisory Committee, 53401
Nebraska Advisory Committee, 53401

Coast Guard
RULES
Drawbridge Operations:
Cape Fear River, Wilmington, NC, 53342–53343
Trent River, New Bern, NC, 53341–53342
Eleventh Coast Guard District Annual Marine Events, 53329–53337
Special Local Regulations and Safety Zones:
Marine Events in Captain of Port Long Island Sound Zone, 53337–53341
PROPOSED RULES
Recreational Vessel Propeller Strike and Carbon Monoxide Poisoning Casualty Prevention, 53364–53369

Commerce Department
See Census Bureau
See Foreign-Trade Zones Board
See International Trade Administration
See National Oceanic and Atmospheric Administration
NOTICES
Agency Information Collection Activities; Proposals, Submissions, and Approvals, 53401–53402

Committee for Purchase From People Who Are Blind or Severely Disabled
NOTICES
Procurement List; Additions and Deletions, 53417–53420

Corporation for National and Community Service
NOTICES
Agency Information Collection Activities; Proposals, Submissions, and Approvals, 53420

Defense Department
See Air Force Department
See Engineers Corps
NOTICES
Privacy Act; Systems of Records, 53420–53421

Economic Research Service
NOTICES
Agency Information Collection Activities; Proposals, Submissions, and Approvals, 53398–53400

Education Department
NOTICES
Agency Information Collection Activities; Proposals, Submissions, and Approvals; Correction, 53425
Applications for New Awards:
Race to the Top — Early Learning Challenge, 53564–53594

Energy Department
See Federal Energy Regulatory Commission

Engineers Corps
NOTICES
Environmental Impact Statements; Availability, etc.:
Larose to Golden Meadow Hurricane Protection Project, Lafourche Parish, LA, 53424–53425
Mechanical and Artificial Creation and Maintenance of Emergent Sandbar Habitat, Riverine Segments of Upper Missouri River, 53422–53423
Southport Sacramento River Early Implementation Project, West Sacramento, CA, 53423–53424

Environmental Protection Agency
PROPOSED RULES
Approval and Promulgation of Air Quality Implementation Plans
Pennsylvania; Adhesives and Sealants, 53369–53371
Definition of Solid Waste, 53376–53377
Oil and Natural Gas Sector:
New Source Performance Standards and National Emission Standards for Hazardous Air Pollutants Reviews, 53371–53372
Pesticide Petitions Filed for Residues of Pesticide Chemicals in or on Various Commodities, 53372–53376
NOTICES
Amendments to Terminate Uses for Certain Pesticide Registrations:
2–(Hydroxymethyl)–2–nitro–1,3–propanediol (Tris Nitro), 53451–53452
Clean Air Act Operating Permit Program:
Reliant Portland Generating Station, Northampton County, PA; Denial of Petition to Reopen 2001 Title V Permit, 53452–53453
Environmental Impact Statements; Availability, etc.:
Weekly Receipt, 53453–53454
Meetings:
Exposure Modeling, 53454

Farm Credit Administration
PROPOSED RULES
Funding and Fiscal Affairs, Loan Policies and Operations, and Funding Operations:
Capital Adequacy Risk-Weighting Revisions; Alternatives to Credit Ratings, 53344–53346

Federal Aviation Administration
RULES
Airspace Designations:
Incorporation by Reference, 53328–53329
Airworthiness Directives:
Agusta S.p.A. Model A109A and A109AII Helicopters, 53312–53314
Agusta S.p.A. Model A109A, A109A II, A109C, and A109K2 Helicopters, 53324–53326
Airbus Model A330–200 and –300 Series Airplanes, 53303–53308
Boeing Co. Model 737–600, –700, –700C, –800, and –900 Series Airplanes, 53317–53324
Cessna Aircraft Co. Airplanes, 53308–53312
Eurocopter France Model EC120B Helicopters, 53326–53328
Eurocopter France Model SA–365N and SA–365N1 Helicopters, 53315–53317
Saab AB, Saab Aerosystems Model SAAB 2000 Airplanes, 53301–53303
PROPOSED RULES
Airworthiness Directives:
BAE SYSTEMS Limited Model BAe 146 Airplanes and Model Avro 146–RJ Airplanes, 53348–53351
Boeing Co. Model DC–9–81 (MD–81), DC–9–82 (MD–82), DC–9–83 (MD–83), DC–9–87 (MD–87), and MD–88 Airplanes, 53346–53348
Amendments of Class E Airspace:
Alice, TX, 53352–53353
Ardmore, OK, 53355–53356
Carroll, IA, 53353–53354
Centerville, IA, 53358–53359
Greenfield, IA, 53356–53357
Winters, TX, 53354–53355
Establishments of Class E Airspace:
Nashville, AR, 53359–53360
Stuart, IA, 53360–53361
Revocations and Amendments of Class E Airspace:
Olathe, KS, 53361–53362
NOTICES
Agency Information Collection Activities; Proposals, Submissions, and Approvals:
Advanced Qualification Program, 53528–53529
Aircraft Registration, 53530
Malfunction or Defect Report, 53529
Protection of Voluntarily Submitted Information, 53528
Reporting of Laser Illumination of Aircraft, 53529–53530
Meetings:
Government/Industry Aeronautical Charting Forum, 53530–53531

Federal Communications Commission
NOTICES
Privacy Act; Systems of Records, 53454–53457

Federal Deposit Insurance Corporation
NOTICES
Terminations of Receivership:
City Savings FSB, Somerset, NJ, 53457–53458
Update Listing of Financial Institutions in Liquidation:
Financial Institutions for which FDIC has been Appointed Receiver, Liquidator, or Manager, 53458

Federal Election Commission
NOTICES
Meetings; Sunshine Act, 53458

Federal Energy Regulatory Commission
NOTICES
Applications:
Pivotal LNG, Inc., 53425–53426
Baseline Filings:
Moss Bluff Hub, LLC, 53426
Competing Preliminary Permit Applications:
Free Flow Power Corp.; Northland Power Mississippi River LLC, 53427–53440
Environmental Assessments; Availability, etc.:
Planned Liquefaction Project, Freeport LNG Development, L.P., et al., 53440–53442
Initial Market-Based Rate Filings Including Requests for Blanket Section 204 Authorizations:
ENBALA Power Networks (USA), Inc., 53443
Viridian Energy MD LLC, 53442
Preliminary Permit Applications:
Northland Power Mississippi River LLC, 53443–53450
Staff Informational Conferences:
Transmission Planning and Cost Allocation by Transmission Owning and Operating Public Utilities, 53450–53451

Federal Highway Administration
NOTICES
Environmental Impact Statements; Availability, etc.:
Hancock and Pearl River Counties, MS; Rescission, 53531–53532
Hancock County, MS, 53531

Federal Housing Enterprise Oversight Office
RULES
Rules of Practice and Procedure, 53596–53629

Federal Housing Finance Agency
RULES
Rules of Practice and Procedure, 53596–53629
NOTICES
Agency Information Collection Activities; Proposals, Submissions, and Approvals, 53458–53474

Federal Housing Finance Board
RULES
Rules of Practice and Procedure, 53596–53629

Federal Procurement Policy Office
PROPOSED RULES
Cost Accounting Standards:
Accounting for Insurance Costs, 53378–53379
Allocation of Home Office Expenses to Segments, 53377–53378

Federal Reserve System
NOTICES
Changes in Bank Control:
Acquisitions of Shares of Bank or Bank Holding Company, 53474

Fish and Wildlife Service
PROPOSED RULES
Endangered and Threatened Wildlife and Plants:
Gray Wolf in Eastern U.S.; Revising List of Endangered and Threatened Wildlife, 53379–53381
Termination of Southern Sea Otter Translocation Program, 53381–53396
Frameworks for Late Season Migratory Bird Hunting, 53536–53561
NOTICES
Endangered and Threatened Wildlife and Plants:
Revised Recovery Plan for Mojave Population of Desert Tortoise (Gopherus agassizii), 53482–53483

Food and Drug Administration
NOTICES
Food Safety Modernization Act:
Domestic and Foreign Facility Reinspections, Recall, and Importer Reinspection User Fee Rates for Fiscal Year 2012; Correction, 53478

Foreign-Trade Zones Board
NOTICES
Applications for Subzone Status:
Foreign-Trade Zone 14, Little Rock, AR; Mitsubishi Power Systems Americas, Inc., Fort Smith, AR, 53403–53404

Forest Service
NOTICES
Environmental Impact Statements; Availability, etc.:
Black Hills National Forest, South Dakota; Thunder Basin National Grassland, Wyoming; Teckla–Osage–Rapid City Transmission 230 kV Project, 53400–53401
San Juan Land Management Plan, Colorado, 53485–53486

Health and Human Services Department
See Centers for Disease Control and Prevention
See Centers for Medicare & Medicaid Services
See Food and Drug Administration
See Health Resources and Services Administration
See National Institutes of Health
PROPOSED RULES
Designation of Medically Underserved Populations and Health Professional Shortage Areas:
Negotiated Rulemaking Committee Meeting, 53377
NOTICES
Applications for New Awards:
Race to the Top — Early Learning Challenge, 53564–53594

Health Resources and Services Administration
NOTICES
Agency Information Collection Activities; Proposals, Submissions, and Approvals, 53478–53479

Homeland Security Department
See Coast Guard

Housing and Urban Development Department
See Federal Housing Enterprise Oversight Office
PROPOSED RULES
Approval of Farm Credit System Lending Institutions in FHA Mortgage Insurance Programs, 53362–53364
NOTICES
Federal Properties Suitable as Facilities to Assist Homeless, 53481

Interior Department
See Bureau of Ocean Energy Management, Regulation and Enforcement
See Fish and Wildlife Service
See Land Management Bureau
See National Park Service
See Office of Natural Resources Revenue

International Trade Administration
NOTICES
Antidumping and Countervailing Duty Administrative Reviews; Initiations and Requests for Revocations in Part, 53404–53408
Antidumping Duty Administrative Reviews; Rescissions:
Pure Magnesium from People's Republic of China, 53408–53409
Corrected Notice of Court Decision Not in Harmony with Final Determinations, etc.:
Wooden Bedroom Furniture from People's Republic of China, 53409–53412

International Trade Commission
NOTICES
Investigations; Terminations:
Certain Wind- and Solar-Powered Light Posts and Street Lamps, 53489

Justice Department
See Justice Programs Office

Justice Programs Office
NOTICES
Agency Information Collection Activities; Proposals, Submissions, and Approvals:
Census of Problem-Solving Courts 2011, 53489–53491

Labor Department
NOTICES
Agency Information Collection Activities; Proposals, Submissions, and Approvals:
Family and Medical Leave Act Employer and Employee Surveys, 2011, 53491

Unemployment Insurance State Quality Service Plan, 53492

Land Management Bureau
NOTICES
Coal Exploration License Applications; Invitations to Participate:
NMNM 126245, New Mexico, 53483–53484
Environmental Impact Statements; Availability, etc.:
Lower Sonoran and Sonoran Desert National Monument, Arizona, 53484–53485
San Juan Land Management Plan, Colorado, 53485–53486
Meetings:
Resource Advisory Council to Boise District, 53486–53487

Legal Services Corporation
NOTICES
Meetings; Sunshine Act, 53492

Management and Budget Office
See Federal Procurement Policy Office

National Highway Traffic Safety Administration
NOTICES
Petitions for Decisions of Inconsequential Noncompliance:
Jaguar Land Rover North America, LLC, 53532–53533

National Institutes of Health
NOTICES
Meetings:
Center for Scientific Review, 53479–53480
Prospective Grants of Exclusive Licenses:
Conjugate Vaccines Against B. anthracis and Monoclonal Antibodies Against Anthrax, 53480–53481

National Oceanic and Atmospheric Administration
RULES
Atlantic Highly Migratory Species:
Commercial Porbeagle Shark Fishery Closure, 53343
NOTICES
Agency Information Collection Activities; Proposals, Submissions, and Approvals:
Alaska Commercial Operator's Annual Report, 53412–53413
Meetings:
Gulf of Mexico Fishery Management Council, 53416–53417
New England Fishery Management Council, 53415–53417
North Pacific Fishery Management Council, 53416
Pacific Fishery Management Council, 53414–53415
South Atlantic Fishery Management Council, 53413–53414

National Park Service
NOTICES
Meetings:
National Capital Memorial Advisory Commission, 53487

Nuclear Regulatory Commission
NOTICES
Combined License Applications:
South Carolina Public Service Authority, Virgil C. Summer Nuclear Station, Units 2 and 3, 53492–53494
Confirmatory Orders:
United States Enrichment Corporation Paducah Gaseous Enrichment Plant, 53494–53497
Environmental Assessments; Availability, etc.:
Florida Power and Light Co.; St. Lucie Plant, Units 1 and 2, 53497–53498
Environmental Impact Statements; Availability, etc.:
Exelon Generation Co., LLC; Limerick Generating Station, Units 1 and 2, 53498–53500
Issuance of Materials License SUA–1598 and Record of Decision:
Lost Creek ISR, LLC Lost Creek In-Situ Recovery Project, 53500–53501

Office of Federal Housing Enterprise Oversight
See Federal Housing Enterprise Oversight Office

Office of Natural Resources Revenue
NOTICES
Agency Information Collection Activities; Proposals, Submissions, and Approvals, 53487–53489

Securities and Exchange Commission
NOTICES
Agency Information Collection Activities; Proposals, Submissions, and Approvals, 53501–53503
Agency Information Collection Activities; Proposals, Submissions, and Approvals:
NASDAQ OMX BX, Inc., 53503–53505
Self-Regulatory Organizations; Proposed Rule Changes:
NASDAQ OMX BX, Inc., 53507–53509
NASDAQ OMX PHLX LLC, 53506–53507
NASDAQ Stock Market LLC, 53518–53524
New York Stock Exchange LLC, 53513–53514
NYSE Amex LLC, 53511–53513, 53516–53518
NYSE Arca, Inc., 53509–53511, 53515–53516

State Department
NOTICES
Culturally Significant Objects Imported for Exhibition Determinations:
Light Years; Conceptual Art and Photograph, 1964–1977, 53524–53525
Mirror of Buddha; Early Portraits from Tibet, 53524
Once Upon Many Times; Legends and Myths in Himalayan Art, 53524
Environmental Impact Statements; Availability, etc.:
Proposed Keystone XL Project; Public Meetings, 53525–53526

Susquehanna River Basin Commission
NOTICES
Projects Approved for Consumptive Uses of Water, 53526–53528

Transportation Department
See Federal Aviation Administration
See Federal Highway Administration
See National Highway Traffic Safety Administration

Treasury Department
See United States Mint

United States Mint
NOTICES
New Pricing Methodology, 53533–53534

Separate Parts In This Issue

Part II
Interior Department, Fish and Wildlife Service, 53536–53561

Part III
Education Department, 53564–53594
Health and Human Services Department, 53564–53594

Part IV
Federal Housing Finance Agency, 53596–53629
Federal Housing Finance Board, 53596–53629
Housing and Urban Development Department, Federal Housing Enterprise Oversight Office, 53596–53629

Reader Aids

Consult the Reader Aids section at the end of this page for phone numbers, online resources, finding aids, reminders, and notice of recently enacted public laws.

To subscribe to the Federal Register Table of Contents LISTSERV electronic mailing list, go to http://listserv.access.gpo.gov and select Online mailing list archives, FEDREGTOC-L, Join or leave the list (or change settings); then follow the instructions.

CFR PARTS AFFECTED IN THIS ISSUE

A cumulative list of the parts affected this month can be found in the Reader Aids section at the end of this issue.

12 CFR
908 53596
1209 53596
1780 53596
Proposed Rules:
615 53344

14 CFR
39 (9 documents) 53301, 53303, 53305, 53308, 53312, 53315, 53317, 53324, 53326
71 53328
Proposed Rules:
39 (2 documents) 53346, 53348
71 (9 documents) 53352, 53353, 53354, 53355, 53356, 53358, 53359, 53360, 53361

24 CFR
Proposed Rules:
202 53362

33 CFR
100 (2 documents) 53329, 53337
117 (2 documents) 53341, 53342
165 53337
Proposed Rules:
Subch. S 53364

40 CFR
Proposed Rules:
52 53369
60 53371
63 53371
180 53372
260 53376
261 53376
270 53376

42 CFR
Proposed Rules:
5 53377

48 CFR
Proposed Rules:
9904 (2 documents) 53377, 53378

50 CFR
635 53343
Proposed Rules:
17 (2 documents) 53379, 53381
20 53536

Rules and Regulations

Federal Register

Vol. 76, No. 166

Friday, August 26, 2011

This section of the FEDERAL REGISTER contains regulatory documents having general applicability and legal effect, most of which are keyed to and codified in the Code of Federal Regulations, which is published under 50 titles pursuant to 44 U.S.C. 1510.

The Code of Federal Regulations is sold by the Superintendent of Documents. Prices of new books are listed in the first FEDERAL REGISTER issue of each week.

DEPARTMENT OF TRANSPORTATION

Federal Aviation Administration

14 CFR Part 39

[Docket No. FAA–2011–0476; Directorate Identifier 2010–NM–247–AD; Amendment 39–16787; AD 2011–18–05]

RIN 2120–AA64

Airworthiness Directives; Saab AB, Saab Aerosystems Model SAAB 2000 Airplanes

AGENCY: Federal Aviation Administration (FAA), Department of Transportation (DOT).

ACTION: Final rule.

SUMMARY: We are adopting a new airworthiness directive (AD) for the products listed above. This AD results from mandatory continuing airworthiness information (MCAI) originated by an aviation authority of another country to identify and correct an unsafe condition on an aviation product. The MCAI describes the unsafe condition as:

Corrosion damage has been found on the aft pressure bulkhead of SAAB 2000 aeroplanes, located on the rear side of the bulkhead at the bottom outboard flange. Corrosion damage in this area can become the starting point for future crack initiation and propagation.

This condition, if not detected and corrected, could affect the structural integrity of the aft pressure bulkhead, possibly resulting in in-flight decompression of the fuselage and injury to occupants.

* * * * *

We are issuing this AD to require actions to correct the unsafe condition on these products.

DATES: This AD becomes effective September 30, 2011.

The Director of the Federal Register approved the incorporation by reference of a certain publication listed in this AD as of September 30, 2011.

ADDRESSES: You may examine the AD docket on the Internet at *http://www.regulations.gov* or in person at the U.S. Department of Transportation, Docket Operations, M–30, West Building Ground Floor, Room W12–140, 1200 New Jersey Avenue, SE., Washington, DC.

FOR FURTHER INFORMATION CONTACT: Shahram Daneshmandi, Aerospace Engineer, International Branch, ANM–116, Transport Airplane Directorate, FAA, 1601 Lind Avenue, SW., Renton, Washington 98057–3356; telephone (425) 227–1112; fax (425) 227–1149.

SUPPLEMENTARY INFORMATION:

Discussion

We issued a notice of proposed rulemaking (NPRM) to amend 14 CFR part 39 to include an AD that would apply to the specified products. That NPRM was published in the **Federal Register** on June 1, 2011 (76 FR 31508). That NPRM proposed to correct an unsafe condition for the specified products. The MCAI states:

Corrosion damage has been found on the aft pressure bulkhead of SAAB 2000 aeroplanes, located on the rear side of the bulkhead at the bottom outboard flange. Corrosion damage in this area can become the starting point for future crack initiation and propagation.

This condition, if not detected and corrected, could affect the structural integrity of the aft pressure bulkhead, possibly resulting in in-flight decompression of the fuselage and injury to occupants.

For the reasons described above, this AD requires a detailed visual inspection of the aft pressure bulkhead at the bottom outboard flange [for corrosion and drain hole] and, depending on findings, corrective action.

Corrective actions include contacting the FAA or EASA (or its delegated agent) for repair instructions if corrosion is found, and drilling a drain hole. You may obtain further information by examining the MCAI in the AD docket.

Comments

We gave the public the opportunity to participate in developing this AD. We received no comments on the NPRM or on the determination of the cost to the public.

Conclusion

We reviewed the available data and determined that air safety and the public interest require adopting the AD as proposed.

Differences Between This AD and the MCAI or Service Information

We have reviewed the MCAI and related service information and, in general, agree with their substance. But we might have found it necessary to use different words from those in the MCAI to ensure the AD is clear for U.S. operators and is enforceable. In making these changes, we do not intend to differ substantively from the information provided in the MCAI and related service information.

We might also have required different actions in this AD from those in the MCAI in order to follow our FAA policies. Any such differences are highlighted in a NOTE within the AD.

Costs of Compliance

We estimate that this AD will affect 8 products of U.S. registry. We also estimate that it will take about 12 work-hours per product to comply with the basic requirements of this AD. The average labor rate is $85 per work-hour. Based on these figures, we estimate the cost of this AD to the U.S. operators to be $8,160, or $1,020 per product.

Authority for This Rulemaking

Title 49 of the United States Code specifies the FAA's authority to issue rules on aviation safety. Subtitle I, section 106, describes the authority of the FAA Administrator. ''Subtitle VII: Aviation Programs,'' describes in more detail the scope of the Agency's authority.

We are issuing this rulemaking under the authority described in ''Subtitle VII, Part A, Subpart III, Section 44701: General requirements.'' Under that section, Congress charges the FAA with promoting safe flight of civil aircraft in air commerce by prescribing regulations for practices, methods, and procedures the Administrator finds necessary for safety in air commerce. This regulation is within the scope of that authority because it addresses an unsafe condition that is likely to exist or develop on products identified in this rulemaking action.

Regulatory Findings

We determined that this AD will not have federalism implications under Executive Order 13132. This AD will not have a substantial direct effect on the States, on the relationship between the national government and the States,

or on the distribution of power and responsibilities among the various levels of government.

For the reasons discussed above, I certify this AD:

1. Is not a ''significant regulatory action'' under Executive Order 12866;

2. Is not a ''significant rule'' under the DOT Regulatory Policies and Procedures (44 FR 11034, February 26, 1979); and

3. Will not have a significant economic impact, positive or negative, on a substantial number of small entities under the criteria of the Regulatory Flexibility Act.

We prepared a regulatory evaluation of the estimated costs to comply with this AD and placed it in the AD docket.

Examining the AD Docket

You may examine the AD docket on the Internet at *http://www.regulations.gov;* or in person at the Docket Operations office between 9 a.m. and 5 p.m., Monday through Friday, except Federal holidays. The AD docket contains the NPRM, the regulatory evaluation, any comments received, and other information. The street address for the Docket Operations office (telephone (800) 647–5527) is in the **ADDRESSES** section. Comments will be available in the AD docket shortly after receipt.

List of Subjects in 14 CFR Part 39

Air transportation, Aircraft, Aviation safety, Incorporation by reference, Safety.

Adoption of the Amendment

Accordingly, under the authority delegated to me by the Administrator, the FAA amends 14 CFR part 39 as follows:

PART 39—AIRWORTHINESS DIRECTIVES

■ 1. The authority citation for part 39 continues to read as follows:

Authority: 49 U.S.C. 106(g), 40113, 44701.

§ 39.13 [Amended]

■ 2. The FAA amends § 39.13 by adding the following new AD:

2011–18–05 Saab AB, Saab Aerosystems: Amendment 39–16787. Docket No. FAA–2011–0476; Directorate Identifier 2010–NM–247–AD.

Effective Date

(a) This airworthiness directive (AD) becomes effective September 30, 2011.

Affected ADs

(b) None.

Applicability

(c) This AD applies to Saab AB, Saab Aerosystems Model SAAB 2000 airplanes, certificated in any category, all serial numbers.

Subject

(d) Air Transport Association (ATA) of America Code 53: Fuselage.

Reason

(e) The mandatory continuing airworthiness information (MCAI) states:

Corrosion damage has been found on the aft pressure bulkhead of SAAB 2000 aeroplanes, located on the rear side of the bulkhead at the bottom outboard flange. Corrosion damage in this area can become the starting point for future crack initiation and propagation.

This condition, if not detected and corrected, could affect the structural integrity of the aft pressure bulkhead, possibly resulting in in-flight decompression of the fuselage and injury to occupants.

* * * * *

Compliance

(f) You are responsible for having the actions required by this AD performed within the compliance times specified, unless the actions have already been done.

Inspection and Corrective Actions

(g) Within 12 months after the effective date of this AD: Do a detailed inspection for corrosion of the aft pressure bulkhead at the bottom outboard flange, and to determine if there is a drain hole on the left-hand side inboard of the ventral fin, in accordance with the Accomplishment Instructions of Saab Service Bulletin 2000–53–048, Revision 01, dated September 3, 2009.

(h) If any corrosion is found during the inspection required by paragraph (g) of this AD: Before further flight, repair the corrosion in accordance with a method approved by the Manager, International Branch, ANM–116, Transport Airplane Directorate, FAA; or the European Aviation Safety Agency (EASA); or its delegated agent.

(i) If no drain hole is found during the inspection required by paragraph (g) of this AD, before further flight, drill a drain hole, in accordance with the Accomplishment Instructions of Saab Service Bulletin 2000–53–048, Revision 01, dated September 3, 2009.

(j) Within 30 days after accomplishing the inspection required by paragraph (g) of this AD, or within 30 days after the effective date of this AD, whichever is later: Report findings of corrosion to Saab at Saab AB, Saab Aerosystems, SE–581 88, Linköping, Sweden; telephone +46 13 18 5591; fax +46 13 18 4874; e-mail *saab2000.techsupport@saabgroup.com.* Under the provisions of the Paperwork Reduction Act (44 U.S.C. 3501 *et seq.*), the Office of Management and Budget (OMB) has approved the information collection requirements contained in this AD and has assigned OMB Control Number 2120 0056.

Credit for Actions Accomplished in Accordance With Previous Service Information

(k) Actions done before the effective date of this AD in accordance with Saab Service Bulletin 2000–53–048, dated July 6, 2009, are considered acceptable for compliance with the corresponding actions required by paragraph (g) of this AD.

FAA AD Differences

Note 1: This AD differs from the MCAI and/or service information as follows: No differences.

Other FAA AD Provisions

(l) The following provisions also apply to this AD:

(1) *Alternative Methods of Compliance (AMOCs):* The Manager, International Branch, FAA, has the authority to approve AMOCs for this AD, if requested using the procedures found in 14 CFR 39.19. In accordance with 14 CFR 39.19, send your request to your principal inspector or local Flight Standards District Office, as appropriate. If sending information directly to the International Branch, send it to ATTN: Shahram Daneshmandi, Aerospace Engineer, International Branch, ANM–116, Transport Airplane Directorate, FAA, 1601 Lind Avenue, SW., Renton, Washington 98057–3356; telephone (425) 227–1112; fax (425) 227–1149. Information may be e-mailed to: *9-ANM-116-AMOC-REQUESTS@faa.gov.* Before using any approved AMOC, notify your appropriate principal inspector, or lacking a principal inspector, the manager of the local flight standards district office/certificate holding district office. The AMOC approval letter must specifically reference this AD.

(2) *Airworthy Product:* For any requirement in this AD to obtain corrective actions from a manufacturer or other source, use these actions if they are FAA-approved. Corrective actions are considered FAA-approved if they are approved by the State of Design Authority (or their delegated agent). You are required to assure the product is airworthy before it is returned to service.

(3) *Reporting Requirements:* A Federal agency may not conduct or sponsor, and a person is not required to respond to, nor shall a person be subject to a penalty for failure to comply with a collection of information subject to the requirements of the Paperwork Reduction Act unless that collection of information displays a current valid OMB Control Number. The OMB Control Number for this information collection is 2120–0056. Public reporting for this collection of information is estimated to be approximately 5 minutes per response, including the time for reviewing instructions, completing and reviewing the collection of information. All responses to this collection of information are mandatory. Comments concerning the accuracy of this burden and suggestions for reducing the burden should be directed to the FAA at: 800 Independence Ave., SW., Washington, DC 20591, Attn: Information Collection Clearance Officer, AES–200.

Related Information

(m) Refer to MCAI EASA Airworthiness Directive 2010–0184, dated September 6, 2010; and Saab Service Bulletin 2000–53–048, Revision 01, dated September 3, 2009; for related information.

Material Incorporated by Reference

(n) You must use Saab Service Bulletin 2000–53–048, Revision 01, dated September 3, 2009, to do the actions required by this AD, unless the AD specifies otherwise.

(1) The Director of the Federal Register approved the incorporation by reference of this service information under 5 U.S.C. 552(a) and 1 CFR part 51.

(2) For service information identified in this AD, contact Saab AB, Saab Aerosystems, SE–581 88, Linköping, Sweden; telephone +46 13 18 5591; fax +46 13 18 4874; e-mail *saab2000.techsupport@saabgroup.com;* Internet *http://www.saabgroup.com.*

(3) You may review copies of the service information at the FAA, Transport Airplane Directorate, 1601 Lind Avenue, SW., Renton, Washington. For information on the availability of this material at the FAA, call 425–227–1221.

(4) You may also review copies of the service information that is incorporated by reference at the National Archives and Records Administration (NARA). For information on the availability of this material at NARA, call 202–741–6030, or go to: *http://www.archives.gov/federal_register/code_of_federal_regulations/ibr_locations.html.*

Issued in Renton, Washington, on August 12, 2011.

Ali Bahrami,

Manager, Transport Airplane Directorate, Aircraft Certification Service.

[FR Doc. 2011–21621 Filed 8–25–11; 8:45 am]

BILLING CODE 4910–13–P

DEPARTMENT OF TRANSPORTATION

Federal Aviation Administration

14 CFR Part 39

[Docket No. FAA–2011–0224; Directorate Identifier 2010–NM–210–AD; Amendment 39–16772; AD 2011–17–08]

RIN 2120–AA64

Airworthiness Directives; Airbus Model A330–200 and –300 Series Airplanes

AGENCY: Federal Aviation Administration (FAA), Department of Transportation (DOT).

ACTION: Final rule.

SUMMARY: We are superseding an existing airworthiness directive (AD) that applies to the products listed above. This AD results from mandatory continuing airworthiness information (MCAI) originated by an aviation authority of another country to identify and correct an unsafe condition on an aviation product. The MCAI describes the unsafe condition as:

* * * * *

The airworthiness limitations applicable to Damage Tolerant Airworthiness Limitation Items (DT ALI) are currently given in Airbus A330 ALI Document reference AI/SE–M4/95A.0089/97, which is approved by the European Aviation Safety Agency (EASA) and referenced in Airbus Airworthiness Limitations Section (ALS) Part 2.

The issue 17 of Airbus A330 ALI Document introduces more restrictive maintenance requirements/airworthiness limitations. Failure to comply with this issue constitutes an unsafe condition.

This [EASA] AD supersedes EASA AD 2009–0102 [and retains the requirements therein], and requires the implementation of the new or more restrictive maintenance requirements/airworthiness limitations as specified in Airbus A330 ALI Document issue 17.

The unsafe condition is fatigue cracking, damage, and corrosion in certain structure, which could result in reduced structural integrity of the airplane. We are issuing this AD to require actions to correct the unsafe condition on these products.

DATES: This AD becomes September 30, 2011.

The Director of the Federal Register approved the incorporation by reference of a certain publication listed in this AD as of September 30, 2011.

The Director of the Federal Register approved the incorporation by reference of a certain other publication listed in this AD as of June 7, 2006 (71 FR 25919, May 3, 2006).

ADDRESSES: You may examine the AD docket on the Internet at *http://www.regulations.gov* or in person at the U.S. Department of Transportation, Docket Operations, M–30, West Building Ground Floor, Room W12–140, 1200 New Jersey Avenue, SE., Washington, DC.

FOR FURTHER INFORMATION CONTACT: Vladimir Ulyanov, Aerospace Engineer, International Branch, ANM–116, Transport Airplane Directorate, FAA, 1601 Lind Avenue, SW., Renton, Washington 98057–3356; telephone (425) 227–1138; fax (425) 227–1149.

SUPPLEMENTARY INFORMATION:

Discussion

We issued a notice of proposed rulemaking (NPRM) to amend 14 CFR part 39 to include an AD that would apply to the specified products. That NPRM was published in the **Federal Register** on March 22, 2011 (76 FR 15867), and proposed to supersede AD 2006–09–07, Amendment 39–14577 (71 FR 25919, May 3, 2006). That NPRM proposed to correct an unsafe condition for the specified products. The MCAI states:

The airworthiness limitations are distributed in the Airbus A330 Airworthiness Limitations Section (ALS).

The airworthiness limitations applicable to Damage Tolerant Airworthiness Limitation Items (DT ALI) are currently given in Airbus A330 ALI Document reference AI/SE–M4/95A.0089/97, which is approved by the European Aviation Safety Agency (EASA) and referenced in Airbus Airworthiness Limitations Section (ALS) Part 2.

The issue 17 of Airbus A330 ALI Document introduces more restrictive maintenance requirements/airworthiness limitations. Failure to comply with this issue constitutes an unsafe condition.

This [EASA] AD supersedes EASA AD 2009–0102 [and retains the requirements therein], and requires the implementation of the new or more restrictive maintenance requirements/airworthiness limitations as specified in Airbus A330 ALI Document issue 17.

The unsafe condition is fatigue cracking, damage, and corrosion in certain structure, which could result in reduced structural integrity of the airplane. You may obtain further information by examining the MCAI in the AD docket.

Comments

We gave the public the opportunity to participate in developing this AD. We received no comments on the NPRM or on the determination of the cost to the public.

Conclusion

We reviewed the available data and determined that air safety and the public interest require adopting the AD as proposed.

Differences Between This AD and the MCAI or Service Information

We have reviewed the MCAI and related service information and, in general, agree with their substance. But we might have found it necessary to use different words from those in the MCAI to ensure the AD is clear for U.S. operators and is enforceable. In making these changes, we do not intend to differ substantively from the information provided in the MCAI and related service information.

We might also have required different actions in this AD from those in the MCAI in order to follow our FAA policies. Any such differences are highlighted in a NOTE within the AD.

Costs of Compliance

We estimate that this AD will affect about 54 products of U.S. registry.

The actions that are required by AD 2006–09–07, Amendment 39–14577 (71 FR 25919, May 3, 2006), and retained in this AD, take about 1 work-hour per product, at an average labor rate of $85 per work hour. Based on these figures, the estimated cost of the currently required actions is $85 per product.

We estimate that it will take about 1 work-hour per product to comply with

the requirements of this AD. The average labor rate is $85 per work-hour. Based on these figures, we estimate the cost of the AD on U.S. operators to be $4,590, or $85 per product.

Authority for This Rulemaking

Title 49 of the United States Code specifies the FAA's authority to issue rules on aviation safety. Subtitle I, section 106, describes the authority of the FAA Administrator. ''Subtitle VII: Aviation Programs,'' describes in more detail the scope of the Agency's authority.

We are issuing this rulemaking under the authority described in ''Subtitle VII, Part A, Subpart III, Section 44701: General requirements.'' Under that section, Congress charges the FAA with promoting safe flight of civil aircraft in air commerce by prescribing regulations for practices, methods, and procedures the Administrator finds necessary for safety in air commerce. This regulation is within the scope of that authority because it addresses an unsafe condition that is likely to exist or develop on products identified in this rulemaking action.

Regulatory Findings

We determined that this AD will not have federalism implications under Executive Order 13132. This AD will not have a substantial direct effect on the States, on the relationship between the national government and the States, or on the distribution of power and responsibilities among the various levels of government.

For the reasons discussed above, I certify this AD:

1. Is not a ''significant regulatory action'' under Executive Order 12866;
2. Is not a ''significant rule'' under the DOT Regulatory Policies and Procedures (44 FR 11034, February 26, 1979); and
3. Will not have a significant economic impact, positive or negative, on a substantial number of small entities under the criteria of the Regulatory Flexibility Act.

We prepared a regulatory evaluation of the estimated costs to comply with this AD and placed it in the AD docket.

Examining the AD Docket

You may examine the AD docket on the Internet at *http://www.regulations.gov;* or in person at the Docket Operations office between 9 a.m. and 5 p.m., Monday through Friday, except Federal holidays. The AD docket contains the NPRM, the regulatory evaluation, any comments received, and other information. The street address for the Docket Operations office (telephone (800) 647–5527) is in the **ADDRESSES** section. Comments will be available in the AD docket shortly after receipt.

List of Subjects in 14 CFR Part 39

Air transportation, Aircraft, Aviation safety, Incorporation by reference, Safety.

Adoption of the Amendment

Accordingly, under the authority delegated to me by the Administrator, the FAA amends 14 CFR part 39 as follows:

PART 39—AIRWORTHINESS DIRECTIVES

■ 1. The authority citation for part 39 continues to read as follows:

Authority: 49 U.S.C. 106(g), 40113, 44701.

§ 39.13 [Amended]

■ 2. The FAA amends § 39.13 by removing Amendment 39–14577 (71 FR 25919, May 3, 2006) and adding the following new AD:

2011–17–08 Airbus: Amendment 39–16772. Docket No. FAA–2011–0224; Directorate Identifier 2010–NM–210–AD.

Effective Date

(a) This airworthiness directive (AD) becomes effective September 30, 2011.

Affected ADs

(b) This AD supersedes AD 2006–09–07, Amendment 39–14577 (71 FR 25919, May 3, 2006).

Applicability

(c) This AD applies to Airbus Model A330–201, –202, –203, –223, –223F, –243, and –243F airplanes, and Model A330–301, –302, –303, –321, –322, –323, –341, –342, and –343 airplanes; certificated in any category; all manufacturer serial numbers.

Note 1: This AD requires revisions to certain operator maintenance documents to include new inspections. Compliance with these inspections is required by 14 CFR 91.403(c). For airplanes that have been previously modified, altered, or repaired in the areas addressed by these inspections, the operator may not be able to accomplish the inspections described in the revisions. In this situation, to comply with 14 CFR 91.403(c), the operator must request approval for an alternative method of compliance according to paragraph (j)(1) of this AD. The request should include a description of changes to the required inspections that will ensure the continued operational safety of the airplane.

Subject

(d) Air Transport Association (ATA) of America Code 05.

Reason

(e) The mandatory continuing airworthiness information (MCAI) states:

* * * * *

The airworthiness limitations applicable to Damage Tolerant Airworthiness Limitation Items (DT ALI) are currently given in Airbus A330 ALI Document reference AI/SE–M4/95A.0089/97, which is approved by the European Aviation Safety Agency (EASA) and referenced in Airbus Airworthiness Limitations Section (ALS) Part 2.

The issue 17 of Airbus A330 ALI Document introduces more restrictive maintenance requirements/airworthiness limitations. Failure to comply with this issue constitutes an unsafe condition.

This [EASA] AD supersedes EASA AD 2009–0102 [and retains the requirements therein], and requires the implementation of the new or more restrictive maintenance requirements/airworthiness limitations as specified in Airbus A330 ALI Document issue 17.

The unsafe condition is fatigue cracking, damage, and corrosion in certain structure, which could result in reduced structural integrity of the airplane.

Compliance

(f) You are responsible for having the actions required by this AD performed within the compliance times specified, unless the actions have already been done.

Restatement of Requirements of Paragraph (f)(2) of AD 2006–09–07, Amendment 39–14577 (71 FR 25919, May 3, 2006)

Airworthiness Limitations Revision

(g) For Model A330–201, –202, –203, –223, –243, –301, –302, –303, –321, –322, –323, –341, –342, and –343 airplanes: Within 3 months after June 7, 2006 (the effective date of AD 2006–09–07, Amendment 39–14577 (71 FR 25919, May 3, 2006)), revise the ALS of the Instructions for Continued Airworthiness by incorporating Airbus Document AI/SE–M4/95A.0089/97, ''A330 Airworthiness Limitation Items,'' Issue 12, dated November 1, 2003, as specified in Section 9–2 of the Airbus A330 Maintenance Planning Document (MPD), into the ALS.

New Requirements of This AD

Revise the Maintenance Program

(h) Within 3 months after the effective date of this AD: Revise the maintenance program by incorporating Airbus Document AI/SE–M4/95A.0089/97, ''A330 Airworthiness Limitation Items,'' Issue 17, dated May 28, 2010. At the times specified in Airbus Document AI/SE–M4/95A.0089/97, ''A330 Airworthiness Limitation Items,'' Issue 17, dated May 28, 2010, comply with all applicable maintenance requirements and associated airworthiness limitations included in Airbus Document AI/SE–M4/95A.0089/97, ''A330 Airworthiness Limitation Items,'' Issue 17, dated May 28, 2010. Accomplishing the revision in this paragraph ends the requirements in paragraph (g) of this AD.

Alternative Intervals or Limits

(i) Except as provided by paragraph (j)(1) of this AD, after accomplishing the actions specified in paragraph (h) of this AD, no alternatives to the maintenance tasks, intervals, or limitations specified in paragraph (h) of this AD may be used.

FAA AD Differences

Note 2: This AD differs from the MCAI and/or service information as follows: No differences.

Other FAA AD Provisions

(j) The following provisions also apply to this AD:

(1) *Alternative Methods of Compliance (AMOCs):* The Manager, International Branch, ANM–116, FAA, has the authority to approve AMOCs for this AD, if requested using the procedures found in 14 CFR 39.19. In accordance with 14 CFR 39.19, send your request to your principal inspector or local Flight Standards District Office, as appropriate. If sending information directly to the International Branch, send it to ATTN: Vladimir Ulyanov, Aerospace Engineer, International Branch, ANM–116, Transport Airplane Directorate, FAA, 1601 Lind Avenue, SW., Renton, Washington 98057–3356; telephone (425) 227–1138; fax (425) 227–1149. Information may be e-mailed to: *9-ANM-116-AMOC-REQUESTS@faa.gov.* Before using any approved AMOC, notify your appropriate principal inspector, or lacking a principal inspector, the manager of the local flight standards district office/certificate holding district office. The AMOC approval letter must specifically reference this AD.

(2) *Airworthy Product:* For any requirement in this AD to obtain corrective actions from a manufacturer or other source, use these actions if they are FAA-approved. Corrective actions are considered FAA-approved if they are approved by the State of Design Authority (or their delegated agent). You are required to assure the product is airworthy before it is returned to service.

Related Information

(k) Refer to Mandatory Continuing Airworthiness Information (MCAI) EASA Airworthiness Directive 2010–0174, dated August 17, 2010; Airbus Document AI/SE–M4/95A.0089/97, ''A330 Airworthiness Limitation Items,'' Issue 12, dated November 1, 2003; and Airbus Document AI/SE–M4/95A.0089/97, ''A330 Airworthiness Limitation Items,'' Issue 17, dated May 28, 2010; for related information.

Material Incorporated by Reference

(l) You must use Airbus Document AI/SE–M4/95A.0089/97, ''A330 Airworthiness Limitation Items,'' Issue 17, dated May 28, 2010; and Airbus Document AI/SE–M4/95A.0089/97, ''A330 Airworthiness Limitation Items,'' Issue 12, dated November 1, 2003; as applicable; to do the actions required by this AD; unless the AD specifies otherwise. The issue number of Airbus Document AI/SE–M4/95A.0089/97, ''A330 Airworthiness Limitation Items,'' Issue 17, dated May 28, 2010, is indicated only on the title page of this document.

(1) The Director of the Federal Register approved the incorporation by reference of Airbus Document AI/SE–M4/95A.0089/97, ''A330 Airworthiness Limitation Items,'' Issue 17, dated May 28, 2010, under 5 U.S.C. 552(a) and 1 CFR part 51.

(2) The Director of the Federal Register previously approved the incorporation by reference of Airbus Document AI/SE–M4/95A.0089/97, ''A330 Airworthiness Limitation Items,'' Issue 12, dated November 1, 2003, on June 7, 2006 (71 FR 25919, May 3, 2006).

(3) For service information identified in this AD, contact Airbus SAS—Airworthiness Office—EAL, 1 Rond Point Maurice Bellonte, 31707 Blagnac Cedex, France; telephone +33 5 61 93 36 96; fax +33 5 61 93 45 80; e-mail *airworthiness.A330–A340@airbus.com;* Internet *http://www.airbus.com.*

(4) You may review copies of the service information at the FAA, Transport Airplane Directorate, 1601 Lind Avenue, SW., Renton, Washington. For information on the availability of this material at the FAA, call 425–227–1221.

(5) You may also review copies of the service information that is incorporated by reference at the National Archives and Records Administration (NARA). For information on the availability of this material at NARA, call 202–741–6030, or go to: *http://www.archives.gov/federal_register/code_of_federal_regulations/ibr_locations.html.*

Issued in Renton, Washington, on August 2, 2011.

Ali Bahrami,

Manager, Transport Airplane Directorate, Aircraft Certification Service.

[FR Doc. 2011–21623 Filed 8–25–11; 8:45 am]

BILLING CODE 4910–13–P

DEPARTMENT OF TRANSPORTATION

Federal Aviation Administration

14 CFR Part 39

[Docket No. FAA–2011–0225; Directorate Identifier 2010–NM–211–AD; Amendment 39–16773; AD 2011–17–09]

RIN 2120–AA64

Airworthiness Directives; Airbus Model A330–200 and –300 Series Airplanes

AGENCY: Federal Aviation Administration (FAA), Department of Transportation (DOT).

ACTION: Final rule.

SUMMARY: We are adopting a new airworthiness directive (AD) for the products listed above. This AD results from mandatory continuing airworthiness information (MCAI) originated by an aviation authority of another country to identify and correct an unsafe condition on an aviation product. The MCAI describes the unsafe condition as:

* * * * *

The airworthiness limitations applicable to the Safe Life Airworthiness Limitation Items (SL ALI) are given in Airbus A330 ALS Part 1 and A340 ALS Part 1, which are approved by the European Aviation Safety Agency (EASA).

The revision 05 of Airbus A340 ALS Part 1 introduces more restrictive maintenance requirements and/or airworthiness limitations. Failure to comply with this revision constitutes an unsafe condition.

For A330 aeroplanes, this EASA AD retains the requirements of EASA AD 2010–0131, which it supersedes.

For A340 aeroplanes, this EASA AD supersedes EASA AD 2009–0192, and requires the implementation of the new or more restrictive maintenance requirements and/or airworthiness limitations as specified in Airbus A340 ALS Part 1, revision 05.

The unsafe condition is fatigue cracking, damage, and corrosion in certain structure, which could result in reduced structural integrity of the airplane. We are issuing this AD to require actions to correct the unsafe condition on these products.

DATES: This AD becomes effective September 30, 2011.

The Director of the Federal Register approved the incorporation by reference of a certain publication listed in this AD as of September 30, 2011.

The Director of the Federal Register approved the incorporation by reference of a certain other publication listed in this AD as of June 7, 2006 (71 FR 25919, May 3, 2006).

ADDRESSES: You may examine the AD docket on the Internet at *http://www.regulations.gov* or in person at the U.S. Department of Transportation, Docket Operations, M–30, West Building Ground Floor, Room W12–140, 1200 New Jersey Avenue, SE., Washington, DC.

FOR FURTHER INFORMATION CONTACT: Vladimir Ulyanov, Aerospace Engineer, International Branch, ANM–116, Transport Airplane Directorate, FAA, 1601 Lind Avenue, SW., Renton, Washington 98057–3356; telephone (425) 227–1138; fax (425) 227–1149.

SUPPLEMENTARY INFORMATION:

Discussion

We issued a notice of proposed rulemaking (NPRM) to amend 14 CFR part 39 to include an AD that would apply to the specified products. That NPRM was published in the **Federal Register** on March 22, 2011 (76 FR 15872). That NPRM proposed to correct an unsafe condition for the specified products. The MCAI states:

The airworthiness limitations are currently distributed in the Airbus A330 Airworthiness Limitations Section (ALS) and A340 ALS.

The airworthiness limitations applicable to the Safe Life Airworthiness Limitation Items (SL ALI) are given in Airbus A330 ALS Part 1 and A340 ALS Part 1, which are approved by the European Aviation Safety Agency (EASA).

The revision 05 of Airbus A340 ALS Part 1 introduces more restrictive maintenance

requirements and/or airworthiness limitations. Failure to comply with this revision constitutes an unsafe condition.

For A330 aeroplanes, this EASA AD retains the requirements of EASA AD 2010–0131, which it supersedes.

For A340 aeroplanes, this EASA AD supersedes EASA AD 2009–0192, and requires the implementation of the new or more restrictive maintenance requirements and/or airworthiness limitations as specified in Airbus A340 ALS Part 1, revision 05.

The unsafe condition is fatigue cracking, damage, and corrosion in certain structure, which could result in reduced structural integrity of the airplane. You may obtain further information by examining the MCAI in the AD docket.

Comments

We gave the public the opportunity to participate in developing this AD. We considered the comment received.

Request To Include Variations to the Airworthiness Limitations Section (ALS) Specified in Paragraph (h)

Delta stated that Airbus Variations 0GVLG100008C0S to Revision 04, dated July 7, 2010, of Airbus A330 ALS Part 1, ''Safe Life Airworthiness Limitation Items,'' and 0GVLG110009C0S to Revision 05, dated March 31, 2011, of Airbus A330 ALS Part 1, ''Safe Life Airworthiness Limitation Items,'' are approved variations to Airbus A330 ALS Part 1, ''Safe Life Airworthiness Limitation Items,'' Revision 05, dated July 29, 2010, as defined in paragraph (h) of the NPRM. Delta recommends that these variations be included in the requirements in paragraph (h).

We do not agree with the commenter's request. Based on information received from Airbus, those variations are not mandatory, but offer an alternative method of compliance (AMOC) to the requirements in paragraph (h) of this AD. We do not consider it appropriate to include various provisions in an AD applicable only to certain airplanes or to a single operator's unique use of an affected airplane. Individual operators may request approval of an AMOC under the provisions of paragraph (j) of this AD, provided sufficient data are submitted to substantiate such a request. We have not changed the AD in this regard.

Conclusion

We reviewed the available data, including the comment received, and determined that air safety and the public interest require adopting the AD as proposed.

Differences Between This AD and the MCAI or Service Information

We have reviewed the MCAI and related service information and, in general, agree with their substance. But we might have found it necessary to use different words from those in the MCAI to ensure the AD is clear for U.S. operators and is enforceable. In making these changes, we do not intend to differ substantively from the information provided in the MCAI and related service information.

We might also have required different actions in this AD from those in the MCAI in order to follow our FAA policies. Any such differences are highlighted in a NOTE within the AD.

Costs of Compliance

We estimate that this AD will affect about 55 products of U.S. registry.

The actions that are required by AD 2006–09–07, Amendment 39–14577 (71 FR 25919, May 3, 2006), take about 1 work-hour per product, at an average labor rate of $85 per work hour. Based on these figures, the estimated cost of the currently required actions is $85 per product.

We estimate that it will take about 1 work-hour per product to comply with the requirements of this AD. The average labor rate is $85 per work-hour. Based on these figures, we estimate the cost of the AD on U.S. operators to be $4,675, or $85 per product.

Authority for This Rulemaking

Title 49 of the United States Code specifies the FAA's authority to issue rules on aviation safety. Subtitle I, section 106, describes the authority of the FAA Administrator. ''Subtitle VII: Aviation Programs,'' describes in more detail the scope of the Agency's authority.

We are issuing this rulemaking under the authority described in ''Subtitle VII, Part A, Subpart III, Section 44701: General requirements.'' Under that section, Congress charges the FAA with promoting safe flight of civil aircraft in air commerce by prescribing regulations for practices, methods, and procedures the Administrator finds necessary for safety in air commerce. This regulation is within the scope of that authority because it addresses an unsafe condition that is likely to exist or develop on products identified in this rulemaking action.

Regulatory Findings

We determined that this AD will not have federalism implications under Executive Order 13132. This AD will not have a substantial direct effect on the States, on the relationship between the national government and the States, or on the distribution of power and responsibilities among the various levels of government.

For the reasons discussed above, I certify this AD:

1. Is not a ''significant regulatory action'' under Executive Order 12866;

2. Is not a ''significant rule'' under the DOT Regulatory Policies and Procedures (44 FR 11034, February 26, 1979); and

3. Will not have a significant economic impact, positive or negative, on a substantial number of small entities under the criteria of the Regulatory Flexibility Act.

We prepared a regulatory evaluation of the estimated costs to comply with this AD and placed it in the AD docket.

Examining the AD Docket

You may examine the AD docket on the Internet at *http://www.regulations.gov;* or in person at the Docket Operations office between 9 a.m. and 5 p.m., Monday through Friday, except Federal holidays. The AD docket contains the NPRM, the regulatory evaluation, any comments received, and other information. The street address for the Docket Operations office (telephone (800) 647–5527) is in the **ADDRESSES** section. Comments will be available in the AD docket shortly after receipt.

List of Subjects in 14 CFR Part 39

Air transportation, Aircraft, Aviation safety, Incorporation by reference, Safety.

Adoption of the Amendment

Accordingly, under the authority delegated to me by the Administrator, the FAA amends 14 CFR part 39 as follows:

PART 39—AIRWORTHINESS DIRECTIVES

■ 1. The authority citation for part 39 continues to read as follows:

Authority: 49 U.S.C. 106(g), 40113, 44701.

§ 39.13 [Amended]

■ 2. The FAA amends § 39.13 by adding the following new AD:

2011–17–09 Airbus: Amendment 39–16773. Docket No. FAA–2011–0225; Directorate Identifier 2010–NM–211–AD.

Effective Date

(a) This airworthiness directive (AD) becomes effective September 30, 2011.

Affected ADs

(b) AD 2011–17–08, Amendment 39–16772, also published in today's **Federal Register**, is affected by this AD. AD 2011–17–08 supersedes AD 2006–09–07, Amendment 39–14577 (71 FR 25919, May 3, 2006). The

requirements of paragraph (f)(2) of AD 2006–09–07 (paragraph (g) of AD 2011–17–08) for Airbus Model A330 airplanes are restated in this AD.

Applicability

(c) This AD applies to Airbus Model A330–201, –202, –203, –223, –223F, –243, and –243F airplanes, and Model A330–301, –302, –303, –321, –322, –323, –341, –342, and –343 airplanes, certificated in any category, all manufacturer serial numbers.

Note 1: This AD requires revisions to certain operator maintenance documents to include new inspections. Compliance with these inspections is required by 14 CFR 91.403(c). For airplanes that have been previously modified, altered, or repaired in the areas addressed by these inspections, the operator may not be able to accomplish the inspections described in the revisions. In this situation, to comply with 14 CFR 91.403(c), the operator must request approval for an alternative method of compliance according to paragraph (j)(1) of this AD. The request should include a description of changes to the required inspections that will ensure the continued operational safety of the airplane.

Subject

(d) Air Transport Association (ATA) of America Code 05.

Reason

(e) The mandatory continuing airworthiness information (MCAI) states:

* * * * *

The airworthiness limitations applicable to the Safe Life Airworthiness Limitation Items (SL ALI) are given in Airbus A330 ALS Part 1 and A340 ALS Part 1, which are approved by the European Aviation Safety Agency (EASA).

The revision 05 of Airbus A340 ALS Part 1 introduces more restrictive maintenance requirements and/or airworthiness limitations. Failure to comply with this revision constitutes an unsafe condition.

For A330 aeroplanes, this EASA AD retains the requirements of EASA AD 2010–0131, which it supersedes.

For A340 aeroplanes, this EASA AD supersedes EASA AD 2009–0192, and requires the implementation of the new or more restrictive maintenance requirements and/or airworthiness limitations as specified in Airbus A340 ALS Part 1, revision 05.

The unsafe condition is fatigue cracking, damage, and corrosion in certain structure, which could result in reduced structural integrity of the airplane.

Compliance

(f) You are responsible for having the actions required by this AD performed within the compliance times specified, unless the actions have already been done.

Restatement of Requirements of Paragraph (f)(2) of AD 2006–09–07: Airworthiness Limitations Revision

(g) For Model A330–201, –202, –203, –223, –243, –301, –302, –303, –321, –322, –323, –341, –342, and –343 airplanes: Within 3 months after June 7, 2006 (the effective date of AD 2006–09–07 (71 FR 25919, May 3, 2006)), revise the ALS of the Instructions for Continued Airworthiness by incorporating Section 9–1 ''Life limit/Monitored parts,'' Revision 05, dated April 7, 2005, of the Airbus A330 Maintenance Planning Document, into the ALS.

New Requirements of This AD

Revise the Maintenance Program

(h) Within 3 months after the effective date of this AD: Revise the maintenance program by incorporating Airbus A330 ALS Part 1, ''Safe Life Airworthiness Limitation Items,'' Revision 05, dated July 29, 2010. Comply with all Airbus A330 ALS Part 1, ''Safe Life Airworthiness Limitation Items,'' Revision 05, dated July 29, 2010, at the times specified therein. Accomplishing the revision in this paragraph ends the requirements in paragraph (g) of this AD.

Alternative Intervals or Limits

(i) Except as provided by paragraph (j)(1) of this AD, after accomplishing the actions specified in paragraph (h) of this AD, no alternatives to the maintenance tasks, intervals, or limitations specified in paragraph (h) of this AD may be used.

FAA AD Differences

Note 2: This AD differs from the MCAI and/or service information as follows:

(1) Although the applicability in the MCAI also identifies Airbus Model A340–200, –300, –500, and –600 series airplanes, this AD only applies to Airbus Model A330–200 and –300 series airplanes. FAA AD 2011–04–06, Amendment 39–16606 (76 FR 8610, February 15, 2011), addresses Model A340–200, –300, –500, and –600 series airplanes.

(2) The applicability in the MCAI does not specify Model A330–223F and –243F airplanes. Those models are listed in the applicability of this AD.

(3) The MCAI requires incorporating Airbus A330 ALS Part 1, ''Safe Life Airworthiness Limitation Items,'' Revision 04, dated January 28, 2010; however, this AD requires incorporating Airbus A330 ALS Part 1, ''Safe Life Airworthiness Limitation Items,'' Revision 05, dated July 29, 2010, which adds the airworthiness limitation items for Model A330–223F and –243F airplanes.

Other FAA AD Provisions

(j) The following provisions also apply to this AD:

(1) *Alternative Methods of Compliance (AMOCs):* The Manager, International Branch, ANM–116, FAA, has the authority to approve AMOCs for this AD, if requested using the procedures found in 14 CFR 39.19. In accordance with 14 CFR 39.19, send your request to your principal inspector or local Flight Standards District Office, as appropriate. If sending information directly to the International Branch, send it to ATTN: Vladimir Ulyanov, Aerospace Engineer, International Branch, ANM–116, Transport Airplane Directorate, FAA, 1601 Lind Avenue, SW., Renton, Washington 98057–3356; telephone (425) 227–1138; fax (425) 227–1149. Information may be e-mailed to: *9-ANM-116-AMOC-REQUESTS@faa.gov*. Before using any approved AMOC, notify your appropriate principal inspector, or lacking a principal inspector, the manager of the local flight standards district office/certificate holding district office. The AMOC approval letter must specifically reference this AD.

(2) *Airworthy Product:* For any requirement in this AD to obtain corrective actions from a manufacturer or other source, use these actions if they are FAA-approved. Corrective actions are considered FAA-approved if they are approved by the State of Design Authority (or their delegated agent). You are required to assure the product is airworthy before it is returned to service.

Related Information

(k) Refer to MCAI EASA Airworthiness Directive 2010–0253, dated December 3, 2010; Section 9–1 ''Life limit/Monitored parts'' Revision 05, dated April 7, 2005, of the Airbus A330 Maintenance Planning Document; and Airbus A330 ALS Part 1, ''Safe Life Airworthiness Limitation Items,'' Revision 05, dated July 29, 2010; for related information.

Material Incorporated by Reference

(l) You must use Airbus A330 ALS Part 1, ''Safe Life Airworthiness Limitation Items,'' Revision 05, dated July 29, 2010; and Airbus A330 ALS Section 9–1 ''Life limit/Monitored parts'' Revision 05, dated April 7, 2005, of the Airbus A330 Maintenance Planning Document; as applicable; to do the actions required by this AD, unless the AD specifies otherwise. The revision level of Airbus A330 ALS Part 1, ''Safe Life Airworthiness Limitation Items,'' Revision 05, dated July 29, 2010, is indicated only on the title page and in the Record of Revisions of this document; the revision date of this document is not indicated on the title page of this document.

(1) The Director of the Federal Register approved the incorporation by reference of Airbus A330 ALS Part 1, ''Safe Life Airworthiness Limitation Items,'' Revision 05, dated July 29, 2010, under 5 U.S.C. 552(a) and 1 CFR part 51.

(2) The Director of the Federal Register previously approved the incorporation by reference of Section 9–1 ''Life limit/Monitored parts,'' Revision 05, dated April 7, 2005, of the Airbus A330 Maintenance Planning Document, on June 7, 2006 (71 FR 25919, May 3, 2006).

(3) For service information identified in this AD, contact Airbus SAS—Airworthiness Office—EAL, 1 Rond Point Maurice Bellonte, 31707 Blagnac Cedex, France; telephone +33 5 61 93 36 96; fax +33 5 61 93 45 80, e-mail *airworthiness.A330-A340@airbus.com;* Internet *http://www.airbus.com.*

(4) You may review copies of the service information at the FAA, Transport Airplane Directorate, 1601 Lind Avenue, SW., Renton, Washington. For information on the availability of this material at the FAA, call 425–227–1221.

(5) You may also review copies of the service information that is incorporated by reference at the National Archives and Records Administration (NARA). For information on the availability of this material at NARA, call 202–741–6030, or go to: *http://www.archives.gov/federal_register/*

code_of_federal_regulations/ ibr_locations.html.

Issued in Renton, Washington, on August 2, 2011.

Ali Bahrami,

Manager, Transport Airplane Directorate, Aircraft Certification Service.

[FR Doc. 2011–21625 Filed 8–25–11; 8:45 am]

BILLING CODE 4910–13–P

DEPARTMENT OF TRANSPORTATION

Federal Aviation Administration

14 CFR Part 39

[Docket No. FAA–2007–27747; Directorate Identifier 2007–CE–030–AD; Amendment 39–16782; AD 2009–10–09 R2]

RIN 2120–AA64

Airworthiness Directives; Cessna Aircraft Company Airplanes

AGENCY: Federal Aviation Administration (FAA), DOT.

ACTION: Final rule; request for comments.

SUMMARY: We are revising an existing airworthiness directive (AD) for certain Cessna Aircraft Company (Cessna) Models 150F, 150G, 150H, 150J, 150K, 150L, 150M, A150K, A150L, A150M, F150F, F150G, F150H, F150J, F150K, F150L, F150M, FA150K, FA150L, FRA150L, FA150M, FRA150M, 152, A152, F152, and FA152 airplanes. That AD currently requires either installing a placard prohibiting spins and other acrobatic maneuvers in the airplane or replacing the rudder stop, the rudder stop bumper, and the attachment hardware with a rudder stop modification kit. This new AD requires a change to the modification kit and removal of a small amount of material from the rudder horn assembly for those that have not yet complied with the existing AD or for those who can not comply with the existing AD (because they were unable to obtain full rudder travel with the existing kits). This AD was prompted by operators who have reported difficulty in obtaining full rudder travel with the existing modification kit. We are issuing this AD to revise the kits to use longer rivets and allow a small amount of material to be removed from the rudder horn assembly, which allows operators to obtain full rudder travel.

DATES: This AD is effective September 12, 2011.

The Director of the Federal Register approved the incorporation by reference of certain publications listed in the AD as of September 12, 2011.

We must receive any comments on this AD by October 11, 2011.

ADDRESSES: You may send comments by any of the following methods:

- *Federal eRulemaking Portal:* Go to *http://www.regulations.gov.* Follow the instructions for submitting comments.
- *Fax:* 202–493–2251.
- *Mail:* U.S. Department of Transportation, Docket Operations, M–30, West Building Ground Floor, Room W12–140, 1200 New Jersey Avenue, SE., Washington, DC 20590.
- *Hand Delivery:* U.S. Department of Transportation, Docket Operations, M–30, West Building Ground Floor, Room W12–140, 1200 New Jersey Avenue, SE., Washington, DC 20590, between 9 a.m. and 5 p.m., Monday through Friday, except Federal holidays.

For service information identified in this AD, contact Cessna Aircraft Company, Product Support, P.O. Box 7706, Wichita, KS 67277; telephone: (316) 517–5800; fax: (316) 517–7271; Internet: *http://www.cessna.com.* You may review copies of the referenced service information at the FAA, Small Airplane Directorate, 901 Locust, Kansas City, Missouri 64106. For information on the availability of this material at the FAA, call 816–329–4148.

Examining the AD Docket

You may examine the AD docket on the Internet at *http://www.regulations.gov;* or in person at the Docket Management Facility between 9 a.m. and 5 p.m., Monday through Friday, except Federal holidays. The AD docket contains this AD, the regulatory evaluation, any comments received, and other information. The street address for the Docket Office (phone: 800–647–5527) is in the **ADDRESSES** section. Comments will be available in the AD docket shortly after receipt.

FOR FURTHER INFORMATION CONTACT: Ann Johnson, Aerospace Engineer, FAA, Wichita Aircraft Certification Office, 1801 Airport Road, Room 100, Wichita, Kansas 67209; telephone: (316) 946–4105; fax: (316) 946–4107; e-mail: *ann.johnson@faa.gov.*

SUPPLEMENTARY INFORMATION:

Discussion

On October 27, 2009, we issued AD 2009–10–09 R1, amendment 39–16074 (74 FR 57408, November 6, 2009), for certain Cessna Aircraft Company (Cessna) Models 150F, 150G, 150H, 150J, 150K, 150L, 150M, A150K, A150L, A150M, F150F, F150G, F150H, F150J, F150K, F150L, F150M, FA150K, FA150L, FRA150L, FA150M, FRA150M, 152, A152, F152, and FA152 airplanes. That AD requires installation of a placard prohibiting spins and other acrobatic maneuvers in the airplane or replacement of the rudder stop, rudder stop bumper, and attachment hardware with a new rudder stop modification kit and replacement of the safety wire with jamnuts. The revision was issued to clarify certain model and serial number designations, remove the duplicate requirement of replacing the safety wire with jamnuts, and clarify the conditional acceptability of using modification kit part number (P/N) SK152–25 as a terminating action to that AD. That AD resulted from follow-on investigations of two accidents where the rudder was found in the over-travel position with the stop plate hooked over the stop bolt heads. While neither of the accident aircraft met type design, investigations revealed that aircraft in full conformity with type design can exceed the travel limits set by the rudder stops. We issued that AD to prevent the rudder from traveling past the normal travel limit. Operation in this non-certificated control position is unacceptable and could cause undesirable consequences, such as contact between the rudder and the elevator.

Actions Since AD Was Issued

Since we issued AD 2009–10–09 R1 (74 FR 57408, November 6, 2009), compliance with the existing AD required operators to check for full rudder travel with the installation of the existing kits (P/N SK152–24A and P/N SK152–25A). Some operators have reported difficulty in obtaining full rudder travel with these kits. To correct this issue, Cessna has revised the kits to use longer rivets and allow a small amount of material to be removed from the rudder horn assembly, which allows operators to obtain full rudder travel.

Relevant Service Information

We reviewed Cessna Aircraft Company Service Bulletin SEB01–1, Revision 1, dated March 22, 2011; Cessna Aircraft Company Service Kit SK152–24B, dated March 22, 2011; and Cessna Aircraft Company Service Kit SK152–25B, dated March 22, 2011. The service information describes procedures for replacement of the rudder stop, rudder stop bumper, and attachment hardware with a new rudder stop modification kit.

FAA's Determination

We are issuing this AD because we evaluated all the relevant information and determined the unsafe condition described previously is likely to exist or develop in other products of the same type design.

AD Requirements

This AD requires installation of a placard prohibiting spins and other acrobatic maneuvers in the airplane or replacement of the rudder stop, rudder stop bumper, and attachment hardware with a new rudder stop modification kit.

Change to Existing AD

This AD would retain certain requirements of AD 2009–10–09 R1 (74 FR 57408, November 6, 2009). Since AD 2009–10–09 R1 was issued, the AD format has been revised, and certain paragraphs have been rearranged. As a result, the corresponding paragraph identifiers have changed in this AD, as listed in the following table:

REVISED PARAGRAPH IDENTIFIER

Requirement in AD 2009–10–09 R1	Corresponding requirement in this AD
paragraph (e)	paragraph (g)
paragraph (f)	paragraph (h)

FAA's Justification and Determination of the Effective Date

This action incorporates revised modification kits that can be used by all airplanes that would need the modification incorporated in the future and does not require any additional work for those airplanes with the modification already incorporated (see table 3). Therefore, we find that notice and opportunity for prior public comment are unnecessary and that good cause exists for making this amendment effective in less than 30 days.

Comments Invited

This AD is a final rule that involves requirements affecting flight safety, and we did not provide you with notice and an opportunity to provide your comments before it becomes effective. However, we invite you to send any written data, views, or arguments about this AD. Send your comments to an address listed under the **ADDRESSES** section. Include the docket number FAA–2007–27747 and directorate identifier 2007–CE–030–AD at the beginning of your comments. We specifically invite comments on the overall regulatory, economic, environmental, and energy aspects of this AD. We will consider all comments received by the closing date and may amend this AD because of those comments.

We will post all comments we receive, without change, to *http://www.regulations.gov,* including any personal information you provide. We will also post a report summarizing each substantive verbal contact we receive about this AD.

Costs of Compliance

We estimate that this AD affects 17,090 airplanes of U.S. registry.

Estimated Costs

We estimate the following costs to do the insertion of the operational limitation:

Action	Labor cost	Parts cost	Cost per product	Cost on U.S. operators
Insert limitations and placard	1 work-hour × $85 per hour = $85	Not applicable	$85	$1,452,650

We estimate the following costs to do the modification:

Action	Labor cost	Parts cost	Cost per product	Cost on U.S. operators
Install a rudder stop modification kit	4 work-hours × $85 per hour = $340	$90	$430	$7,348,700

The new requirements of this AD add no additional economic burden. The increased estimated cost of this AD is due to increased labor cost from 2009 when AD 2009–10–09 R1 (74 FR 57408, November 6, 2009) was issued.

Authority for This Rulemaking

Title 49 of the United States Code specifies the FAA's authority to issue rules on aviation safety. Subtitle I, Section 106, describes the authority of the FAA Administrator. Subtitle VII, Aviation Programs, describes in more detail the scope of the Agency's authority.

We are issuing this rulemaking under the authority described in Subtitle VII, Part A, Subpart III, Section 44701, ''General requirements.'' Under that section, Congress charges the FAA with promoting safe flight of civil aircraft in air commerce by prescribing regulations for practices, methods, and procedures the Administrator finds necessary for safety in air commerce. This regulation is within the scope of that authority because it addresses an unsafe condition that is likely to exist or develop on products identified in this rulemaking action.

Regulatory Findings

This AD will not have federalism implications under Executive Order 13132. This AD will not have a substantial direct effect on the States, on the relationship between the national government and the States, or on the distribution of power and responsibilities among the various levels of government.

For the reasons discussed above, I certify that this AD:

(1) Is not a ''significant regulatory action'' under Executive Order 12866,

(2) Is not a ''significant rule'' under DOT Regulatory Policies and Procedures (44 FR 11034, February 26, 1979),

(3) Will not affect intrastate aviation in Alaska, and

(4) Will not have a significant economic impact, positive or negative, on a substantial number of small entities under the criteria of the Regulatory Flexibility Act.

List of Subjects in 14 CFR Part 39

Air transportation, Aircraft, Aviation safety, Incorporation by reference, Safety.

Adoption of the Amendment

Accordingly, under the authority delegated to me by the Administrator, the FAA amends part 39 of the Federal Aviation Regulations (14 CFR part 39) as follows:

PART 39—AIRWORTHINESS DIRECTIVES

■ 1. The authority citation for part 39 continues to read as follows:

Authority: 49 U.S.C. 106(g), 40113, 44701.

§ 39.13 [Amended]

■ 2. The FAA amends § 39.13 by removing airworthiness directive (AD) 2009–10–09 R1, Amendment 39–16074 (74 FR 57408, November 6, 2009), and adding the following new AD:

2009–10–09 R2 Cessna Aircraft Company: Amendment 39–16782; Docket No. FAA–2007–27747; Directorate Identifier 2007–CE–030–AD.

(a) Effective Date

This AD is effective September 12, 2011.

(b) Affected ADs

This AD revises AD 2009–10–09 R1, Amendment 39–16074 (74 FR 57408, November 6, 2009).

(c) Applicability

(c) This AD applies to the following airplane models and serial numbers that are certificated in any category:

TABLE 1—APPLICABILITY

Models	Serial Nos.
(1) 150F	15061533 through 15064532.
(2) 150G	15064533 through 15064969 and 15064971 through 15067198.
(3) 150H	15067199 through 15069308 and 649.
(4) 150J	15069309 through 15071128.
(5) 150K	15071129 through 15072003.
(6) 150L	15072004 through 15075781.
(7) 150M	15075782 through 15079405.
(8) A150K	A1500001 through A1500226.
(9) A150L	A1500227 through A1500432 and A1500434 through A1500523.
(10) A150M	A1500524 through A1500734 and 15064970.
(11) F150F	F150–0001 through F150–0067.
(12) F150G	F150–0068 through F150–0219.
(13) F150H	F150–0220 through F150–0389.
(14) F150J	F150–0390 through F150–0529.
(15) F150K	F15000530 through F15000658.
(16) F150L	F15000659 through F15001143.
(17) F150M	F15001144 through F15001428.
(18) FA150K	FA1500001 through FA1500081.
(19) FA150L	FA1500082 through FA1500120.
(20) FA150L or FRA150L	FA1500121 through FA1500261 that are equipped with FKA150–2311 and FKA150–2316, or FRA1500121 through FRA1500261.
(21) FA150M or FRA150M	FA1500262 through FA1500336 that are equipped with FKA150–2311 and FKA150–2316, or FRA1500262 through FRA1500336.
(22) 152	15279406 through 15286033.
(23) A152	A1520735 through A1521049, A1500433, and 681.
(24) F152	F15201429 through F15201980.
(25) FA152	FA1520337 through FA1520425.

Note: AD 2009–10–09 R1 (74 FR 57408, November 6, 2009) clarified the applicability of AD 2009–10–09 (74 FR 22429, May 3, 2009), eliminated a duplicate requirement for replacement of safety wire with jamnuts, and clarified the intent of the conditional acceptability of using modification kit part number (P/N) SK152–25 as a terminating requirement to the AD. No further action is required for those already in compliance with AD 2009–10–09 R1, which included verification of full rudder travel as part of the kit work.

(d) Subject

Joint Aircraft System Component (JASC)/Air Transport Association (ATA) of America Code 2720, Rudder Control System.

(e) Unsafe Condition

Aircraft in full conformity with type design can exceed the travel limits set by the rudder stops. We are issuing this AD to prevent the rudder from traveling past the normal travel limit. Operation in this non-certificated control position is unacceptable and could cause undesirable consequences, such as contact between the rudder and the elevator.

(f) Compliance

Comply with this AD within the compliance times specified, unless already done.

(g) Actions

To address this problem, you must do either the actions in option 1 or option 2 of this AD, unless already done:

TABLE 2—ACTIONS, COMPLIANCE AND PROCEDURES

Actions	Compliance	Procedures
(1) *Option 1:* For all airplanes that do not have modification kits P/N SK152–25B or P/N SK152–24B installed (or the other kits allowed by Table 3), do the following: (i) Insert the following text into the Limitations section of the FAA-approved airplane flight manual (AFM), and pilot's operating handbook (POH): "INTENTIONAL SPINS AND OTHER ACROBATIC/AEROBATIC MANEUVERS PROHIBITED PER AD 2009–10–09. NOTE: THIS AD DOES NOT PROHIBIT PERFORMING INTENTIONAL STALLS." (ii) Fabricate a placard (using at least ⅛-inch letters) with the following words and install the placard on the instrument panel within the pilot's clear view: "INTENTIONAL SPINS AND OTHER ACROBATIC/AEROBATIC MANEUVERS PROHIBITED PER AD 2009–10–09." (iii) The AFM and POH limitations in paragraph (g)(1)(i) of the AD and the placard in paragraph (g)(1)(ii) of this AD may be removed after either paragraph (g)(2)(i) or paragraph (g)(2)(ii) of this AD is done.	Within the next 100 hours time-in-service (TIS) after December 11, 2009 (the effective date retained from AD 2009–10–09 R1 (74 FR 57408, November 6, 2009)), or within the next 12 months after December 11, 2009 (the effective date retained from AD 2009–10–09 R1), whichever occurs first.	A person authorized to perform maintenance as specified in 14 CFR section 43.3 of the Federal Aviation Administration Regulations (14 CFR 43.3) is required to make the AFM and POH changes, fabricate the placard required in paragraph (g)(1)(i) of this AD, and make an entry into the aircraft logbook showing compliance with the portion of the AD per compliance with 14 CFR 43.9.
(2) *Option 2:* Install a rudder stop modification kit: (i) For airplanes with a forged bulkhead, replace the rudder stops, rudder stop bumpers, and attachment hardware with the new rudder stop modification kit P/N SK152–25B. (ii) For airplanes with a sheet metal bulkhead, replace the rudder stops, rudder stop bumpers, and attachment hardware with the new rudder stop modification kit P/N SK152–24B. (iii) Refer to Table 3 in paragraph (g) of this AD for other applicable kit P/Ns.	Within the next 100 hours TIS after December 11, 2009 (the effective date retained from AD 2009–10–09 R1 (74 FR 57408, November 6, 2009)), or within the next 12 months after December 11, 2009 (the effective date retained from AD 2009–10–09 R1), whichever occurs first.	Follow Cessna Aircraft Company Service Bulletin SEB01–1, Revision 1, dated March 22, 2011; and, as applicable, either Cessna Aircraft Company Service Kit SK152–25B, dated March 22, 2011, or Cessna Aircraft Company Service Kit SK152–24B, dated March 22, 2011.

(h) Kit Part Number Applicability

Table 3 of this AD identifies when a kit P/N that has already been ordered may be used to comply with this AD. All future orders received by Cessna for kits P/Ns SK152–24, SK152–25, SK152–24A, and SK 152–25A will automatically be filled with P/Ns SK152–24B and SK152–25B, respectively.

TABLE 3—KIT APPLICABILITY

Kit P/N	Type of bulkhead	Can it be installed to comply with this AD, or will credit be given for compliance with previous revisions of this AD?
(1) SK152–24	sheet metal	NO.
(2) SK152–25	forged	ONLY if washer P/N NAS1149F0332P is used (and this is recorded in the maintenance log), AND full rudder travel can be verified.
(3) SK152–24A	sheet metal	ONLY if full rudder travel can be verified.
(4) SK152–25A	forged	ONLY if full rudder travel can be verified.
(5) SK152–24B	sheet metal	YES.
(6) SK152–25B	forged	YES.

(i) Credit for Actions Accomplished Using Previous Service Information

Credit will be given for the actions in paragraphs (g)(1) and (g)(2) of this AD if already done and you were able to verify full rudder travel before the effective date of this AD per AD 2009–10–09 R1, Amendment 39–16074 (74 FR 57408, November 6, 2009); Cessna Aircraft Company Service Bulletin SEB01–1, dated January 22, 2001; and, as applicable, either Cessna Aircraft Company Service Kit SK152–25A, Revision A, dated February 9, 2001, or Cessna Aircraft Company Service Kit SK152–24A, Revision A, dated March 9, 2001.

(j) Alternative Methods of Compliance (AMOCs)

(1) The Manager, Wichita ACO, FAA, has the authority to approve AMOCs for this AD, if requested using the procedures found in 14 CFR 39.19. In accordance with 14 CFR 39.19, send your request to your principal inspector or local Flight Standards District Office, as appropriate. If sending information directly to the manager of the ACO, send it to the attention of the person identified in the Related Information section of this AD.

(2) Before using any approved AMOC, notify your appropriate principal inspector, or lacking a principal inspector, the manager of the local flight standards district office/certificate holding district office.

(3) AMOCs approved for AD 2009–10–09 (74 FR 22429, May 3, 2009) and AD 2009–

10–09 R1 (74 FR 57408, November 6, 2009) are approved as AMOCs for this AD.

(k) Related Information

For more information about this AD, contact Ann Johnson, Aerospace Engineer, FAA, Wichita Aircraft Certification Office, 1801 Airport Road, Room 100, Wichita, Kansas 67209; telephone: (316) 946–4105; fax: (316) 946–4107; e-mail: *ann.johnson@faa.gov.*

(l) Material Incorporated by Reference

(1) You must use the following service information to do the actions required by this AD, unless the AD specifies otherwise. The Director of the Federal Register approved the incorporation by reference (IBR) under 5 U.S.C. 552(a) and 1 CFR part 51 of the following service information on September 12, 2011:

(i) Cessna Aircraft Company Service Bulletin SEB01–1, Revision 1, dated March 22, 2011;

(ii) Cessna Aircraft Company Service Kit SK152–25B, dated March 22, 2011; and

(iii) Cessna Aircraft Company Service Kit SK152–24B, dated March 22, 2011.

(2) For service information identified in this AD, contact Cessna Aircraft Company, Product Support, P.O. Box 7706, Wichita, KS 67277; telephone: (316) 517–5800; fax: (316) 517–7271; Internet: *http://www.cessna.com.*

(3) You may review copies of the service information at the FAA, Small Airplane Directorate, 901 Locust, Kansas City, Missouri 64106. For information on the availability of this material at the FAA, call (816) 329–4148.

(4) You may also review copies of the service information that is incorporated by reference at the National Archives and Records Administration (NARA). For information on the availability of this material at an NARA facility, call 202–741–6030, or go to *http://www.archives.gov/federal_register/code_of_federal_regulations/ibr_locations.html.*

Issued in Kansas City, Missouri, on August 11, 2011.

John Colomy,

Acting Manager, Small Airplane Directorate, Aircraft Certification Service.

[FR Doc. 2011–21210 Filed 8–25–11; 8:45 am]

BILLING CODE 4910–13–P

DEPARTMENT OF TRANSPORTATION

Federal Aviation Administration

14 CFR Part 39

[Docket No. FAA–2011–0861; Directorate Identifier 2010–SW–092–AD; Amendment 39–16778; AD 2011–17–14]

RIN 2120–AA64

Airworthiness Directives; Agusta S.p.A. Model A109A and A109AII Helicopters

AGENCY: Federal Aviation Administration, DOT.

ACTION: Final rule; request for comments.

SUMMARY: This amendment adopts a new airworthiness directive (AD) for the specified Agusta S.p.A. (Agusta) helicopters with a certain tail rotor special hub plug (hub plug) installed. This action requires a one-time inspection to determine the tightening torque value of the hub plug, and depending on the inspection results, replacing certain parts or disassembling the tail rotor hub and blades assembly and inspecting for damage. If the tightening torque value is between 600 kgcm and 700 kgcm, the lock washer and o-ring must be replaced with airworthy parts, and no further action is required. If the tightening torque value is greater than 700 kgcm, the hub plug must be replaced with an airworthy part. Torque the new hub plug to the specified tightening torque between 600 and 700 kgcm. If the tightening torque value of the hub plug is less than 600 kgcm, the tail rotor hub and blades assembly must be disassembled and inspected for damage. If a part is found that is outside allowable damage tolerances, that part must be replaced with an airworthy part. This amendment is prompted by the discovery that a wrong tightening torque value for the hub plug was contained in a revision to the helicopter maintenance manual. The actions specified in this AD are intended to detect an improperly torqued hub plug that could lead to tail rotor failure and subsequent loss of control of the helicopter.

DATES: Effective September 12, 2011.

The incorporation by reference of certain publications listed in the regulations is approved by the Director of the Federal Register as of September 12, 2011.

Comments for inclusion in the Rules Docket must be received on or before October 25, 2011.

ADDRESSES: Use one of the following addresses to submit comments on this AD:

- *Federal eRulemaking Portal:* Go to *http://www.regulations.gov*. Follow the instructions for submitting comments.
- *Fax:* (202) 493–2251.
- *Mail:* U.S. Department of Transportation, Docket Operations, M–30, West Building Ground Floor, Room W12–140, 1200 New Jersey Avenue, SE., Washington, DC 20590.
- *Hand Delivery:* U.S. Department of Transportation, Docket Operations, M–30, West Building Ground Floor, Room W12–140, 1200 New Jersey Avenue, SE., Washington, DC 20590, between 9 a.m. and 5 p.m., Monday through Friday, except Federal holidays.

You may get the service information identified in this AD from Agusta Westland, Customer Support & Services, Via Per Tornavento 15, 21019 Somma Lombardo (VA) Italy, ATTN: Giovanni Cecchelli; telephone 39-0331–711133; fax 39 0331 711180; or at *http://www.agustawestland.com/technical-bullettins.*

Examining the Docket: You may examine the docket that contains the AD, any comments, and other information on the Internet at *http://www.regulations.gov*, or in person at the Docket Operations office between 9 a.m. and 5 p.m., Monday through Friday, except Federal holidays. The Docket Operations office (telephone (800) 647–5527) is located in Room W12–140 on the ground floor of the West Building at the street address stated in the **ADDRESSES** section. Comments will be available in the AD docket shortly after receipt.

FOR FURTHER INFORMATION CONTACT: Sharon Miles, Aerospace Engineer, FAA, Rotorcraft Directorate, Regulations and Policy Group, 2601 Meacham Blvd., Fort Worth, Texas 76137; telephone: (817) 222–5122; fax: (817) 222–5961.

SUPPLEMENTARY INFORMATION:

Discussion

The European Aviation Safety Agency (EASA), which is the Technical Agent for the Member States of the European Union, has issued EASA Emergency AD No. 2010–0222–E, dated October 22, 2010 (EAD 2010–0222–E), to correct an unsafe condition for the specified Agusta model helicopters with a hub plug, part number (P/N) 109–0133–18–103, installed. EASA advises that a mistaken value of the tightening torque of the hub plug has been discovered in the maintenance manual of A109A and A109AII helicopters. The investigation carried out by Agusta has revealed that the wrong value of the tightening torque of the hub plug was introduced with Revision 9 of the A109A and A109AII Helicopter Maintenance Manual, dated June 15, 2009. EASA states that this condition could ultimately lead to a tail rotor malfunction. The actions specified in this AD are intended to detect an improperly torqued hub plug that could lead to tail rotor failure and subsequent loss of control of the helicopter.

Related Service Information

Agusta has issued Mandatory Alert Bollettino Tecnico No. 109–132, dated October 22, 2010 (BT), which specifies performing a one-time inspection of the hub plug to verify the right tightening torque value, and provides instruction to restore the correct installation. If the

tightening torque value is at least 600 kgcm, the BT specifies removing the lock washer, P/N 109–0133–17–103, and the o-ring, P/N MS29561–119, and replacing each part with a new part. If the tightening torque value is lower than the minimum required 600 kgcm, the BT specifies instructions to inspect the tail rotor hub and blade assembly, P/N 109–0131–02 (all dash numbers), for damage. If a damaged part is found that is outside the allowable damage tolerances, the BT specifies replacing the part with a new part. The BT also specifies restoring the tightening torque value of the hub plug to between 600 kgcm and 700 kgcm. EASA classified this service bulletin as mandatory and issued EAD 2010–0222–E to ensure the continued airworthiness of these helicopters.

FAA's Evaluation and Unsafe Condition Determination

These helicopters have been approved by the aviation authority of Italy, and are approved for operation in the United States. Pursuant to our bilateral agreement with Italy, EASA, their technical representative, has notified us of the unsafe condition described in the EASA AD. We are issuing this AD because we evaluated all information provided by EASA and determined the unsafe condition exists and is likely to exist or develop on other helicopters of the same type design.

Differences Between This AD and the EASA AD

This AD uses the term ''hours time-in-service'' to describe compliance times, and the EASA AD uses the term ''flight hours''. This AD specifies compliance with the requirements of this AD within 5 hours time-in-service (TIS) or 8 days, whichever occurs first. The EASA Emergency AD specifies compliance within 5 hours TIS, but no later than November 30, 2010, whichever occurs first. This AD addresses corrective action if the tightening torque of the hub plug is greater than the required value of 700 kgcm.

FAA's Determination and Requirements of This AD

This unsafe condition is likely to exist or develop on other helicopters of the same type design. Therefore, this AD is being issued to detect an improperly torqued hub plug that could lead to tail rotor failure and subsequent loss of control of the helicopter. This AD requires within 5 hours TIS or 8 days, whichever comes first, the following:

- Determine if the tightening torque value of the hub plug, P/N 109–0133–18–103, is between 600 kgcm and 700 kgcm.
- If the tightening torque value of the hub plug is between 600 and 700 kgcm, replace the lock washer, P/N 109–0133–17–103, and the o-ring, P/N MS29561–119, with an airworthy part.
- If the tightening torque value of the hub plug is greater than 700 kgcm, replace the hub plug, P/N 109–0133–18–103 with an airworthy part. Torque the hub plug to the specified tightening torque between 600 and 700 kgcm.
- If the tightening torque value of the hub plug is less than the required minimum 600 kgcm, remove the tail rotor hub and blades assembly, P/N 109–0131–02 (all dash numbers), and inspect the broaching and bearing faces of the trunnion, P/N 109–0131–05 or 109–8131–33, for spalling, fretting, or wear. Inspect the hub plug, the spacers, P/N 109–0133–16–103 and 109–0130–89–1, and the static stop, P/N 109–0130–27–5, for damage or corrosion. Inspect the broaching of the output drive shaft, P/N 109–0445–08–3 or 109–0445–08–7, for fretting or wear. If a part is found that is outside allowable damage tolerances, remove the unairworthy part and replace it with an airworthy part.

Accomplish the actions by following specified portions of the service bulletin described previously. The short compliance time involved is required because the previously described critical unsafe condition can adversely affect the structural integrity and controllability of the helicopter. Therefore, the actions specified in this AD are required within 5 hours TIS or 8 days, whichever occurs first, a very short compliance time, and this AD must be issued immediately.

Since a situation exists that requires the immediate adoption of this regulation, it is found that notice and opportunity for prior public comment hereon are impracticable, and that good cause exists for making this amendment effective in less than 30 days.

Costs of Compliance

We estimate that this AD will affect about 63 helicopters of U.S. registry. We estimate the costs to accomplish the requirements of this AD as follows:

Action	Number of work hours × labor rate	Labor cost	Parts cost	Cost per aircraft	Affected fleet size	Fleet cost
Determine the tightening torque value of the hub plug (one-time inspection).	0.25 hrs × labor rate of $85	$21	0	$21	63	$1,323
Replace lock washer and O-ring.	2.0 hrs × labor rate of $85	170	287	457	56 (assume 89% of fleet)	25,592
Replace hub plug	2.0 hrs × labor rate of $85	170	850	1020	1 (assume 1% of the fleet	1020
Replace Trunnion, Hub Plug, Spacers, Static Stop.	5.0 hrs. × labor rate of $85	425	8,884	9,309	7 (assume 10% of fleet)	65,163
Total cost impact for this AD.						93,098

Comments Invited

This AD is a final rule that involves requirements that affect flight safety and was not preceded by notice and an opportunity for public comment; however, we invite you to submit any written data, views, or arguments regarding this AD. Send your comments to an address listed under **ADDRESSES**. Include ''Docket No. FAA–2011–0861; Directorate Identifier 2010–SW–092–AD'' at the beginning of your comments. We specifically invite comments on the overall regulatory, economic, environmental, and energy aspects of the AD. We will consider all comments received by the closing date and may amend the AD in light of those comments.

We will post all comments we receive, without change, to *http://www.regulations.gov*, including any personal information you provide. We will also post a report summarizing each substantive verbal contact with FAA personnel concerning this AD. Using the search function of the docket Web site, you can find and read the comments to any of our dockets, including the name

of the individual who sent the comment. You may review the DOT's complete Privacy Act Statement in the **Federal Register** published on April 11, 2000 (65 FR 19477–78).

Regulatory Findings

We have determined that this AD will not have federalism implications under Executive Order 13132. This AD will not have a substantial direct effect on the States, on the relationship between the national Government and the States, or on the distribution of power and responsibilities among the various levels of government.

For the reasons discussed above, I certify that the regulation:

1. Is not a ''significant regulatory action'' under Executive Order 12866;
2. Is not a ''significant rule'' under the DOT Regulatory Policies and Procedures (44 FR 11034, February 26, 1979);
3. Will not affect intrastate aviation in Alaska to the extent that it justifies making a regulatory distinction; and
4. Will not have a significant economic impact, positive or negative, on a substantial number of small entities under the criteria of the Regulatory Flexibility Act.

We prepared an economic evaluation of the estimated costs to comply with this AD. See the AD docket to examine the economic evaluation.

Authority for This Rulemaking

Title 49 of the United States Code specifies the FAA's authority to issue rules on aviation safety. Subtitle I, Section 106, describes the authority of the FAA Administrator. Subtitle VII, Aviation Programs, describes in more detail the scope of the Agency's authority.

We are issuing this rulemaking under the authority described in Subtitle VII, Part A, Subpart III, Section 44701, ''General requirements.'' Under that section, Congress charges the FAA with promoting safe flight of civil aircraft in air commerce by prescribing regulations for practices, methods, and procedures the Administrator finds necessary for safety in air commerce. This regulation is within the scope of that authority because it addresses an unsafe condition that is likely to exist or develop on products identified in this rulemaking action.

List of Subjects in 14 CFR Part 39

Air transportation, Aircraft, Aviation safety, Incorporation by reference, Safety.

Adoption of the Amendment

Accordingly, pursuant to the authority delegated to me by the Administrator, the Federal Aviation Administration amends Part 39 of the Federal Aviation Regulations (14 CFR Part 39) as follows:

PART 39—AIRWORTHINESS DIRECTIVES

■ 1. The authority citation for Part 39 continues to read as follows:

Authority: 49 U.S.C. 106(g), 40113, 44701.

§ 39.13 [Amended]

■ 2. Section 39.13 is amended by adding a new airworthiness directive to read as follows:

2011–17–14 AGUSTA S.p.A.: Amendment 39–16678; Docket No. FAA–2011–0861; Directorate Identifier 2010–SW–092–AD.

Applicability: Models A109A and A109A II helicopters, with tail rotor special hub plug (hub plug), part number (P/N) 109–0133–18–103; certificated in any category.

Compliance: Required within 5 hours time-in-service (TIS) or 8 days, whichever occurs first, unless accomplished previously.

To detect an improperly torqued hub plug that could lead to tail rotor failure and subsequent loss of control of the helicopter, accomplish the following:

(a) Determine if the tightening torque value of the hub plug is between 600 kgcm and 700 kgcm.

(b) If the tightening torque value of the hub plug is between 600 kgcm and 700 kgcm, remove and replace the lock washer, P/N 109–0133–17–103, and the o-ring, P/N MS29561–119, with airworthy parts.

(c) If the tightening torque value of the hub plug is greater than 700 kgcm, remove and replace the hub plug, P/N 109–0133–18–103 with an airworthy part. Torque the hub plug to the specified tightening torque between 600 and 700 kgcm.

(d) If the tightening torque value of the hub plug is less than the 600 kgcm, do the following:

(1) Remove the tail rotor hub and blades assembly, P/N 109–0131–02 (all dash numbers).

(2) Inspect the broaching faces (splined area ''F'') and bearing faces (area ''D'') of the trunnion, P/N 109–0131–05 or 109–8131–33, for spalling, fretting, or wear by reference to Figure 2 of Agusta Mandatory Alert Bollettino Tecnico No. 109–132, dated October 22, 2010 (BT). If there is spalling, fretting, or wear that is outside allowable damage tolerances specified in Figure 2 of the BT, replace the trunnion with an airworthy trunnion.

(3) Inspect the hub plug, the spacers, P/N 109–0133–16–103 and 109–0130–89–1, and the static stop, P/N 109–0130–27–5, for spalling, fretting, wear, or corrosion. If there is any spalling, fretting, wear, or corrosion, replace the part with an airworthy part.

(4) Inspect the broaching area ''H'' of the output drive shaft, P/N 109–0445–08–3 or 109–0445–08–7, of the tail rotor gearbox assembly, P/N 109–0440–01, for fretting, wear, or other damage by referring to Figure 3 of the BT. If there is any fretting, wear, or other damage of 0.07 mm or more in depth between loaded and unloaded areas, replace the output drive shaft with an airworthy output drive shaft.

(5) Reinstall the tail rotor hub and blade assembly, and tighten the torque on the hub plug to between 600 kgcm and 700 kgcm.

(6) Accomplish a flap axis play inspection, a flap hinge friction inspection, and a tail rotor dynamic balance.

(e) To request a different method of compliance or a different compliance time for this AD, follow the procedures in 14 CFR 39.19. Contact the Manager, Safety Management Group, ATTN: DOT/FAA Southwest Region, Sharon Miles, Rotorcraft Directorate, Regulations and Policy Group, ASW–111, 2601 Meacham Blvd., Fort Worth, Texas 76137; telephone: (817) 222–5122; fax: (817) 222–5961, for information about previously approved alternative methods of compliance.

(f) The Joint Aircraft System/Component (JASC) Code is 6500: Tail rotor drive system.

(g) The inspection shall be done in accordance with the specified portions of Agusta Mandatory Alert Bollettino Tecnico No. 109–132, dated October 22, 2010. The Director of the Federal Register approved this incorporation by reference in accordance with 5 U.S.C. 552(a) and 1 CFR part 51. Copies may be obtained from Agusta Westland, Customer Support & Services, Via Per Tornavento 15, 21019 Somma Lombardo (VA) Italy, ATTN: Giovanni Cecchelli; telephone 39–0331–711133; fax 39 0331 711180; or at *http://www.agustawestland.com/technical-bullettins*. Copies may be inspected at the FAA, Office of the Regional Counsel, Southwest Region, 2601 Meacham Blvd., Room 663, Fort Worth, Texas, or at the National Archives and Records Administration (NARA). For information on the availability of this material at NARA, call 202–741–6030, or go to: *http://www.archives.gov/federal_register/code_of_federal_regulations/ibr_locations.html.*

(h) This amendment becomes effective on September 12, 2011.

Note: The subject of this AD is addressed in the European Aviation Safety Agency (Italy), Emergency AD 2010–0222–E, dated October 22, 2010.

Issued in Fort Worth, Texas, on August 8, 2011.

Kim Smith,

Manager, Rotorcraft Directorate, Aircraft Certification Service.

[FR Doc. 2011–21475 Filed 8–25–11; 8:45 am]

BILLING CODE 4910–13–P

DEPARTMENT OF TRANSPORTATION

Federal Aviation Administration

14 CFR Part 39

[Docket No. FAA–2011–0791; Directorate Identifier 2009–SW–29–AD; Amendment 39–16763; AD 2011–16–05]

RIN 2120–AA64

Airworthiness Directives; Eurocopter France Model SA–365N and SA–365N1 Helicopters

AGENCY: Federal Aviation Administration (FAA), Department of Transportation (DOT).

ACTION: Final rule; request for comments.

SUMMARY: This amendment adopts a new airworthiness directive (AD) for the specified Eurocopter France (Eurocopter) model helicopters. This action requires you to disconnect the high level fuel switches in the fuel tanks on the affected helicopters. In addition, for helicopters without a crossfeed between the fuel filler necks, you must install a placard on or near the center console fuel panel that specifies fuel transfer limitations. This amendment is prompted by a report that a high level fuel switch probe unit installed on a Model SA–365N helicopter in the rear (right-hand) auxiliary fuel tank group separated, causing damage to the insulation of the electrical wires which supply electrical power to the high level indicator light on the fuel control panel during a fuel transfer. This condition, if not corrected, could lead to exposure of the electrical wires, which could lead to a short circuit and activation of the indicator light without the high fuel level actually being reached. Additionally, a short circuit could become an ignition source inside the fuel tank, and result in a fuel tank explosion and subsequent loss of control of the helicopter.

DATES: This AD becomes effective on September 12, 2011.

The incorporation by reference of certain publications is approved by the Director of the Federal Register as of September 12, 2011.

We must receive comments on this AD by October 25, 2011.

ADDRESSES: Use one of the following addresses to submit comments on this AD:

- *Federal eRulemaking Portal:* Go to *http://www.regulations.gov.* Follow the instructions for submitting comments.
- *Fax:* (202) 493–2251.
- *Mail:* U.S. Department of Transportation, Docket Operations, M–30, West Building Ground Floor, Room W12–140, 1200 New Jersey Avenue, SE., Washington, DC 20590.
- *Hand Delivery:* U.S. Department of Transportation, Docket Operations, M–30, West Building Ground Floor, Room W12–140, 1200 New Jersey Avenue, SE., Washington, DC 20590, between 9 a.m. and 5 p.m., Monday through Friday, except Federal holidays.

You may get the service information identified in this AD from American Eurocopter Corporation, 2701 Forum Drive, Grand Prairie, TX 75053–4005, telephone (800) 232–0323, fax (972) 641–3710, or at *http://www.eurocopter.com.*

Examining the Docket: You may examine the AD docket on the Internet at *http://www.regulations.gov* or in person at the Docket Operations office between 9 a.m. and 5 p.m., Monday through Friday, except Federal holidays. The AD docket contains this AD, the economic evaluation, any comments received, and other information. The street address for the Docket Operations office (telephone (800) 647–5527) is stated in the **ADDRESSES** section of this AD. Comments will be available in the AD docket shortly after receipt.

FOR FURTHER INFORMATION CONTACT: DOT/FAA Southwest Region, George Schwab, Aviation Safety Engineer, Safety Management Group, Rotorcraft Directorate, 2601 Meacham Blvd., Fort Worth, TX 76137; telephone (817) 222–5114; fax (817) 222–5961.

SUPPLEMENTARY INFORMATION:

Discussion

The European Aviation Safety Agency (EASA), which is the Technical Agent for the Member States of the European Union, has issued EASA Emergency AD No. 2009–0109–E, dated May 7, 2009 (EAD No. 2009–0109–E), to correct an unsafe condition for the Eurocopter Model SA–365N and SA–365N1 helicopters, all serial numbers, except helicopters that have been modified with either modification kit 365A087690.00 or modification 0728B17, both of which remove the two high level fuel switches from helicopters with a crossfeed between the fuel filler necks. There has been a report that the high level fuel switch probe unit installed on a Model SA–365N helicopter in the rear (right-hand) auxiliary fuel tank group separated, causing damage to the insulation of the electrical wires which supply electrical power to the high level fuel indicator light on the fuel control panel during a fuel transfer. EASA advises that this condition, if not corrected, could lead to exposure of the electrical wires, which could lead to a short circuit and subsequent lighting of the indicator light without the high fuel level actually being reached. Additionally, a short circuit could become an ignition source inside the fuel tank, which in combination with flammable fuel vapors (if present), could result in a fuel tank explosion and subsequent loss of control of the helicopter.

Related Service Information

Eurocopter has issued Emergency Alert Service Bulletin No. 01.00.63, Revision 1, dated May 13, 2009 (EASB), for the Model AS365N and AS365N1 helicopters, which specifies disconnecting the high level switches on helicopters that have not been modified with either modification kit 365A087690.00 or modification 0728B17. The EASB also contains a limitation for helicopters without a crossfeed that allows fuel transfers between fuel tanks only if the receiving fuel tank contains less than 300 liters (240 kg or 529 lb.), in order to prevent an overflow of fuel. The EASB specifies installing a placard that lists the appropriate limitations for transferring fuel. The EASA AD classified this EASB as mandatory and issued EAD No. 2009–0109–E to ensure the continued airworthiness of these helicopters.

FAA's Evaluation and Unsafe Condition Determination

These helicopters have been approved by the aviation authority of France and are approved for operation in the United States. Pursuant to our bilateral agreement with France, EASA, their Technical Agent, has notified us of the unsafe condition described in the EASA AD. We are issuing this AD because we evaluated all information provided by EASA and determined the unsafe condition exists and is likely to exist or develop on other helicopters of these same type designs. Therefore, this AD requires, within 10 hours time-in-service, or 30 days, whichever occurs first, disconnecting the high level fuel switches on the affected helicopters that have not been modified with either modification kit 365A087690.00 or modification 0728B17. For helicopters without a crossfeed between the fuel filler necks, you must install a placard on or near the center console fuel panel. The placard (limitation) permits fuel transfer only when the receiving fuel tank has less than the placarded amount of fuel so that if the transfer switch is inadvertently left on, a minimum amount of fuel will be vented overboard. The placard must list the fuel transfer limitations using the same unit of measurement as the fuel quantity

indicator. Accomplish the actions by following specified portions of the service bulletin described previously.

The short compliance time involved is required because the previously described critical unsafe condition can adversely affect the controllability of the helicopter. Therefore, this action is required in a short period of time and this AD must be issued immediately. Since a situation exists that requires the immediate adoption of this regulation, it is found that notice and opportunity for prior public comment hereon are impracticable, and that good cause exists for making this amendment effective in less than 30 days.

Differences Between This AD and the EASA AD

The EASA AD uses the term ''flight hours'' to describe compliance times, and we use the term ''hours time-in-service.''

Costs of Compliance

There are no affected helicopters currently listed on the U.S. Registry. Therefore, the issuance of this AD will not impose any costs on U.S. operators.

Comments Invited

This AD is a final rule that involves requirements affecting flight safety, and we did not precede it by notice and opportunity for public comment. However, we invite you to send us any written data, views, or arguments concerning this AD. Send your comments to an address listed under the **ADDRESSES** section of this AD. Include ''Docket No. FAA–2011–0791; Directorate Identifier 2009–SW–29–AD'' at the beginning of your comments. We specifically invite comments on the overall regulatory, economic, environmental, and energy aspects of this AD. We will consider all comments received by the closing date and may amend this AD because of those comments.

We will post all comments we receive, without change, to *http://www.regulations.gov* including any personal information you provide. We will also post a report summarizing each substantive verbal contact we receive about this AD. Using the search function of the docket Web site, you can find and read the comments to any of our dockets, including the name of the individual who sent the comment. You may review the DOT's complete Privacy Act Statement in the **Federal Register** published on April 11, 2000 (65 FR 19477–78).

Regulatory Findings

We determined that this AD will not have federalism implications under Executive Order 13132. This AD will not have a substantial direct effect on the States, on the relationship between the national government and the States, or on the distribution of power and responsibilities among the various levels of government.

Therefore, I certify this AD:

1. Is not a ''significant regulatory action'' under Executive Order 12866;

2. Is not a ''significant rule'' under the DOT Regulatory Policies and Procedures (44 FR 11034, February 26, 1979); and

3. Will not affect intrastate aviation in Alaska to the extent that it justifies making a regulatory distinction; and

4. Will not have a significant economic impact, positive or negative, on a substantial number of small entities under the criteria of the Regulatory Flexibility Act.

We prepared an economic evaluation of the estimated costs to comply with this AD. See the AD docket to examine the economic evaluation.

Authority for This Rulemaking

Title 49 of the United States Code specifies the FAA's authority to issue rules on aviation safety. Subtitle I, section 106, describes the authority of the FAA Administrator. ''Subtitle VII: Aviation Programs,'' describes in more detail the scope of the Agency's authority.

We are issuing this rulemaking under the authority described in ''Subtitle VII, Part A, Subpart III, Section 44701: General requirements.'' Under that section, Congress charges the FAA with promoting safe flight of civil aircraft in air commerce by prescribing regulations for practices, methods, and procedures the Administrator finds necessary for safety in air commerce. This regulation is within the scope of that authority because it addresses an unsafe condition that is likely to exist or develop on helicopters identified in this rulemaking action.

List of Subjects in 14 CFR Part 39

Air transportation, Aircraft, Aviation safety, Incorporation by reference, Safety.

Adoption of the Amendment

Accordingly, pursuant to the authority delegated to me by the Administrator, the Federal Aviation Administration amends Part 39 of the Federal Aviation Regulations (14 CFR Part 39) as follows:

PART 39—AIRWORTHINESS DIRECTIVES

■ 1. The authority citation for Part 39 continues to read as follows:

Authority: 49 U.S.C. 106(g), 40113, 44701.

§ 39.13 [Amended]

■ 2. Section 39.13 by adding the following new airworthiness directive (AD) to read as follows:

2011–16–05 Eurocopter France (Eurocopter): Amendment 39–16763. Docket No. FAA–2011–0791; Directorate Identifier 2009–SW–29–AD.

Applicability: Eurocopter Model SA–365N and SA–365N1 helicopters, all serial numbers, except helicopters with a crossfeed between the fuel filler necks in which the two fuel tank high level fuel switches have been removed in accordance with modification kit 365A087690.00 or modification 0728B17; certificated in any category.

Compliance: Within 10 hours time-in-service, or 30 days, whichever occurs first, unless accomplished previously.

To prevent exposure of the electrical wires, which could lead to a short circuit and activation of the indicator light without the high fuel level actually being reached; and to prevent a short circuit, which could become an ignition source inside the fuel tank, and result in a fuel tank explosion and subsequent loss of control of the helicopter, accomplish the following:

(a) Disconnect the fuel tank high level fuel switches in accordance with the Accomplishment Instructions, paragraph 2.B.1., and by referring to Figure 1 of Eurocopter Emergency Alert Service Bulletin No. 01.00.63, Revision 1, dated May 13, 2009 (EASB).

(b) For helicopters without a crossfeed between the fuel filler necks, install a placard on or near the center console fuel panel in accordance with the Accomplishment Instructions, paragraph 2.B.2., and by referring to Figures 2 and 3 of the EASB. The placard must use the same unit of measurement as the fuel quantity indicator (*i.e.,* liters (l), kilograms (kg) or pounds (lb)), as depicted in Figure 2 of the EASB.

(c) To request a different method of compliance or a different compliance time for this AD, follow the procedures in 14 CFR 39.19. Contact the Manager, Safety Management Group, ATTN: DOT/FAA Southwest Region, George Schwab, Aerospace Engineer, Rotorcraft Directorate, 2601 Meacham Blvd., Fort Worth, Texas 76137; telephone (817) 222–5114; fax (817) 222–5961, for information about previously approved alternative methods of compliance.

(d) The Joint Aircraft System/Component Code is 2897: Fuel System Wiring.

(e) The actions required by this AD must be done in accordance with specified portions of Eurocopter Emergency Alert Service Bulletin No. 01.00.63, Revision 1, dated May 13, 2009. The Director of the Federal Register approved this incorporation by reference in accordance with 5 U.S.C. 552(a) and 1 CFR part 51. Copies may be

obtained from American Eurocopter Corporation, 2701 Forum Drive, Grand Prairie, TX 75053–4005, telephone (800) 232–0323, fax (972) 641–3710, or at *http://www.eurocopter.com.* Copies may be inspected at the FAA, Office of the Regional Counsel, Southwest Region, 2601 Meacham Blvd., Room 663, Fort Worth, Texas, or at the National Archives and Records Administration (NARA). For information on the availability of this material at NARA, call 202–741–6030, or go to: *http://www.archives.gov/federal_register/code_of_federal_regulations/ibr_locations.html.*

(f) This amendment becomes effective on September 12, 2011.

Note: The subject of this AD is addressed in European Aviation Safety Agency (France) Emergency AD No. 2009–0109–E, dated May 7, 2009.

Issued in Fort Worth, Texas, on July 21, 2011.

Kim Smith,

Manager, Rotorcraft Directorate, Aircraft Certification Service.

[FR Doc. 2011–21477 Filed 8–25–11; 8:45 am]

BILLING CODE 4910–13–P

DEPARTMENT OF TRANSPORTATION

Federal Aviation Administration

14 CFR Part 39

[Docket No. FAA–2007–28661; Directorate Identifier 2007–NM–013–AD; Amendment 39–16785; AD 2011–18–03]

RIN 2120–AA64

Airworthiness Directives; The Boeing Company Model 737–600, –700, –700C, –800, and –900 Series Airplanes

AGENCY: Federal Aviation Administration (FAA), DOT.

ACTION: Final rule.

SUMMARY: We are adopting a new airworthiness directive (AD) for the products listed above. This AD requires installation of an automatic shutoff system for the center tank fuel boost pumps, and installation of a placard in the airplane flight deck if necessary. This AD also requires revisions to the Limitations and Normal Procedures sections of the airplane flight manual to advise the flightcrew of certain operating restrictions for airplanes equipped with an automated center tank fuel pump shutoff control. This AD further requires installation of a secondary control relay for the electrical control circuit of each of the two center tank fuel boost pumps. Additionally, this AD requires a revision to the maintenance program to incorporate Airworthiness Limitation (AWL) No. 28–AWL–23. This AD also provides an option of installation and maintenance of universal fault interrupters using a certain supplemental type certificate, which terminates certain requirements of this AD. This AD was prompted by fuel system reviews conducted by the manufacturer. We are issuing this AD to prevent center tank fuel pump operation with continuous low pressure, which could lead to friction sparks or overheating in the fuel pump inlet that could create a potential ignition source inside the center fuel tank. These conditions, in combination with flammable fuel vapors, could result in a center fuel tank explosion and consequent loss of the airplane.

DATES: This AD is effective September 30, 2011.

The Director of the Federal Register approved the incorporation by reference of certain publications listed in the AD as of September 30, 2011.

ADDRESSES: For Boeing service information identified in this AD, contact Boeing Commercial Airplanes, Attention: Data & Services Management, P.O. Box 3707, MC 2H–65, Seattle, Washington 98124–2207; telephone 206–544–5000, extension 1; fax 206–766–5680; e-mail *me.boecom@boeing.com;* Internet *https://www.myboeingfleet.com.* For TDG Aerospace information identified in this AD, contact TDG Aerospace, Inc., 545 Corporate Drive, Escondido, California 92029; telephone 760–466–1040; fax 760–466–1038; Internet *http://www.tdgaerospace.com;* e-mail *info@tdgaerospace.com.*

You may review copies of the referenced service information at the FAA, Transport Airplane Directorate, 1601 Lind Avenue, SW., Renton, Washington. For information on the availability of this material at the FAA, call 425–227–1221.

Examining the AD Docket

You may examine the AD docket on the Internet at *http://www.regulations.gov;* or in person at the Docket Management Facility between 9 a.m. and 5 p.m., Monday through Friday, except Federal holidays. The AD docket contains this AD, the regulatory evaluation, any comments received, and other information. The address for the Docket Office (phone: 800–647–5527) is Document Management Facility, U.S. Department of Transportation, Docket Operations, M–30, West Building Ground Floor, Room W12–140, 1200 New Jersey Avenue, SE., Washington, DC 20590.

FOR FURTHER INFORMATION CONTACT: Tak Kobayashi, Aerospace Engineer, Propulsion Branch, ANM–140S, FAA, Seattle Aircraft Certification Office, 1601 Lind Avenue, SW., Renton, Washington 98057–3356; phone: (425) 917–6499; fax: (425) 917–6590; e-mail: *Takahisa.Kobayashi@faa.gov.*

SUPPLEMENTARY INFORMATION:

Discussion

We issued a supplemental notice of proposed rulemaking (SNPRM) to amend 14 CFR part 39 to include an airworthiness directive (AD) that would apply to the specified products. That SNPRM published in the **Federal Register** on March 8, 2011 (76 FR 12634). The original NPRM (72 FR 37479, July 10, 2007) proposed to require installation of an automatic shutoff system for the center tank fuel boost pumps, installation of a placard in the airplane flight deck if necessary, and concurrent modification of the P5–2 fuel control module assembly. The original NPRM also proposed to require revisions to the Limitations and Normal Procedures sections of the airplane flight manual (AFM) to advise the flightcrew of certain operating restrictions for airplanes equipped with an automated center tank fuel pump shutoff control. Additionally, the original NPRM proposed to require a revision to the Airworthiness Limitations (AWL) section of the Instructions for Continued Airworthiness (ICA) to incorporate AWL No. 28–AWL–19 and No. 28–AWL–23. The original NPRM further proposed to require installation of a secondary control relay for the electrical control circuit of each of the two center tank fuel boost pumps. The SNPRM proposed to revise the original NPRM by adding airplanes, adding additional operational testing of the automatic shutoff system for certain airplanes, removing the requirement for incorporating AWL No. 28–AWL–19 into the AWL section of the ICA, and adding an option of installation and maintenance of universal fault interrupters using a certain supplemental type certificate.

Comments

We gave the public the opportunity to participate in developing this AD. The following presents the comments received on the proposal and the FAA's response to each comment.

Support for SNPRM

Delta Airlines (Delta) stated that it has no objections to the SNPRM.

Request To Correct Service Information Citation

Boeing requested that we revise the fifth paragraph under the ''Explanation

of Additional Changes Made to this Supplemental NPRM'' section of the SNPRM to correct the model designation portion of the document citation provided in that paragraph.

Although we agree that there was a typographical error in the document citation specified in the ''Explanation of Additional Changes Made to this Supplemental NPRM'' section of the SNPRM, we do not agree to revise this AD in this regard, as that section is not restated in the final rule. No change to the AD is necessary in this regard.

Request To Include Definition in Paragraph (b) of the SNPRM

Boeing requested that we revise paragraph (b) of the SNPRM to properly define ''2001–08–24'' as an airworthiness directive. We agree and have revised paragraph (b) of this AD accordingly.

Request To Revise Conditions Specified in Paragraph (h) of the SNPRM

Boeing requested that we revise paragraph (h) of the SNPRM to remove the last sentence of the paragraph, which specifies the conditions when a placard is not necessary. Boeing stated that this sentence is confusing and possibly contradictory, and that the placard requirement provided in those paragraphs is well defined without the use of this sentence.

We agree partially. We agree to remove the first condition specified in the second to last sentence of paragraph (h) of this AD, which states, ''If automatic shutoff systems are installed concurrently on all airplanes in an operator's fleet in accordance with paragraph (g) of this AD * * *, the placard installation specified in this paragraph is not necessary.'' If the automatic shutoff system is concurrently installed on all airplanes, there will be no airplanes on which a placard would be required to be installed. Therefore, this condition is unnecessary. We have revised paragraph (h) of this AD to remove this condition.

We do not agree to remove the second condition in the second to last sentence of paragraph (h) of this AD. That condition provides an option to operators that prefer not to install a placard on any airplane in their fleet. If an operator intends to maintain fuel usage restrictions specified in AD 2002–24–51, Amendment 39–12992 (68 FR 10, January 2, 2003), and AD 2001–08–24, Amendment 39–12201 (66 FR 20733, April 25, 2001), for all airplanes in the fleet until the automatic shutoff systems are installed on all of those airplanes, the operator is not required to install a placard, even after installing the automatic shutoff system on any airplane in its fleet. We have determined that this option should remain available to operators, and have not revised paragraph (h) of this AD to remove this condition. We also have not revised paragraph (s) of this AD to remove the same condition specified in the second to last sentence of paragraph (h) of this AD.

Also, we acknowledge that a reference to AD 2001–08–24, Amendment 39–12201 (66 FR 20733, April 25, 2001), was inadvertently omitted in the last sentence of paragraph (h) of the SNPRM. We have added a reference to AD 2001–08–24 in paragraph (h) of this AD, and provided additional clarification in the ''Additional Changes Made to this AD'' section of this AD.

Request To Revise Proposed Wording of Placard in Paragraph (h) of the SNPRM

Southwest Airlines (Southwest) requested that the SNPRM be revised to allow alternative wording for the placard required by paragraph (h) of the SNPRM. Southwest stated that it has a placard adjacent to the pilot's primary flight display on all of its airplanes that are not equipped with an automatic shutoff system, which reads, ''AD 2002–19–52 fuel usage restrictions required.'' Southwest reported that it is unable to find any language in either AD 2002–19–52, Amendment 39–12900 (67 FR 61253, September 30, 2002), or AD 2002–24–51, Amendment 39–12992 (68 FR 10, January 2, 2003), that requires the placard text proposed in paragraph (h) of the SNPRM.

We agree partially. We have determined that clarification of paragraph (h) of this final rule is necessary to prevent inadvertent removal of the placard required by paragraph (h) of this AD and by paragraph (e) of AD 2002–19–52, Amendment 39–12900 (67 FR 61253, September 30, 2002). As discussed in the preamble of the SNPRM, AD 2002–19–52 requires installation of a placard, and provides an optional terminating action that allows removal of that placard. The intent of the placard installation required by AD 2002–19–52 is to address mixed operation of the airplanes with and without the optional terminating action accomplished within an operator's fleet. After issuance of AD 2002–19–52, we issued AD 2002–24–51, Amendment 39–12992 (68 FR 10, January 2, 2003), to mandate fuel usage restrictions identical to those required by AD 2002–19–52, to address an unsafe condition not related to AD 2002–19–52. Airworthiness Directive 2002–24–51 did not require installation of a placard, because terminating action for that AD was not available at the time, and, therefore, there was no concern about mixed fleet operation.

We do not agree to revise the placard wording required by paragraph (h) of this AD. However, if a placard that refers to AD 2002–19–52, Amendment 39–12900 (67 FR 61253, September 30, 2002), already exists on an airplane, we have determined that use of that placard does meet the placard installation requirement of paragraph (h) of this AD. Therefore, we have revised paragraph (h) of this AD to state that installation of a placard in accordance with paragraph (e) of AD 2002–19–52 is acceptable for compliance with the requirements of paragraph (h) of this AD, and that the placard may be removed from an airplane only once the terminating action specified in paragraph (g) of AD 2002–19–52 and installation of an automatic shutoff system required by paragraph (g) of this AD have been accomplished.

Request To Reference Latest AWL Revision in Paragraph (k) of the SNPRM

Boeing requested that we revise paragraph (k) of the SNPRM to reference the latest revision of the maintenance planning data (MPD) document. Boeing stated that the document specified in paragraph (k) of the SNPRM has been revised, and that the applicable subsection has changed from ''G'' to ''E.1.'' in Revision February 2011.

We agree that this AD should refer to the current revision of the MPD document specified in paragraph (k) of this AD. Therefore, we have revised paragraph (k) of this AD to refer to Subsection E, AWLs—Fuel Systems, of Section 9, Airworthiness Limitations (AWLs) and Certification Maintenance Requirements (CMRs), of the Boeing 737–600/700/800/900 MPD Document, D626A001–CMR, Revision March 2011.

We have also added new paragraph (t) to this AD (and re-identified subsequent paragraphs accordingly) to give credit to operators that accomplish the AWL revision required by paragraph (k) of this AD before the effective date of this AD using any of the following revisions of Subsection G, Airworthiness Limitations—Fuel System AWLs, of Section 9, Airworthiness Limitations (AWLs) and Certification Maintenance Requirements (CMRs), of the Boeing 737–600/700/800/900 MPD Document, D626A001–CMR:

- Revision March 2008
- Revision April 2008
- Revision June 2008
- Revision February 2009
- Revision March 2009
- Revision August 2009

- Revision September 2009
- Revision November 2009
- Revision January 2010
- Revision May 2010
- Revision July 2010
- Revision August 2010

Paragraph (t) of this AD also provides credit to operators that accomplish the AWL revision required by paragraph (k) of this AD before the effective date of this AD using Subsection E, AWLs—Fuel Systems, of Section 9, Airworthiness Limitations (AWLs) and Certification Maintenance Requirements (CMRs), of the Boeing 737–600/700/800/900 MPD Document, D626A001–CMR, Revision February 2011.

Request To Clarify Terminating Action for Paragraphs (m) and (n) of SNPRM

Delta requested that we revise paragraphs (m) and (n) of the SNPRM to clarify that accomplishing the actions specified in paragraph (s) of the SNPRM terminates the actions required in paragraphs (m) and (n) of the SNPRM. Delta pointed out that paragraph (s) of the SNPRM terminates only paragraphs (g) through (k) of the SNPRM, and not paragraphs (m) and (n) of the SNPRM. Delta stated that operators planning to comply with the proposed requirements by installing universal fault interrupters (UFIs) in accordance with paragraph (s) of the SNPRM will not accomplish paragraphs (g), (h), and (i) of the SNPRM. Therefore, Delta asserted that, as the SNPRM is currently written, operators that do not do the actions specified in paragraphs (g), (h), and (i) of the SNPRM will not be able to comply with the requirements of paragraphs (m) and (n) of the SNPRM.

We agree. Accomplishing the optional terminating action specified in paragraph (s) of this AD terminates the requirements of paragraphs (g) through (k) of this AD, making the optional terminating action specified in paragraph (s) of this AD equivalent to the actions required by paragraphs (g) through (k) of this AD. Therefore, complying with paragraph (s) of this AD meets the condition required to terminate the requirements of paragraph (a) of AD 2001–08–24, Amendment 39–12201 (66 FR 20733, April 25, 2001), and paragraph (b) of AD 2002–24–51, Amendment 39–12992 (68 FR 10, January 2, 2003). We have revised paragraphs (m) and (n) of this AD to state that accomplishing the actions (*i.e.,* optional terminating action) specified in paragraph (s) of this AD terminates the requirements of paragraph (a) of AD 2001–08–24 and paragraph (b) of AD 2002–24–51.

Request To Provide Credit for Aerospace Supplemental Type Certificate (STC)

Continental Airlines (Continental) requested that we revise the SNPRM to give credit for incorporating universal fault interrupters (UFIs) using TDG Aerospace STC ST02076LA before the effective date of the AD. Continental pointed out that paragraphs (q) and (r) of the SNPRM provide credit for actions done before the effective date of the AD using other service information.

While we do agree that installing TDG Aerospace UFIs before the effective date of this AD is acceptable for terminating certain actions required by this AD, we do not agree to revise the AD to provide specific credit for those actions. Installing TDG Aerospace UFIs, as specified in paragraph (s) of this AD, is acceptable both before and after the effective date of this AD. Operators are always permitted to accomplish the requirements of an AD at a time earlier than the specified compliance time. We have not changed the AD in this regard.

Request To Revise Paragraph (v) of the SNPRM To Add Contact Information

Delta requested that we revise paragraph (v) of the SNPRM to add contact information for TDG Aerospace. Delta pointed out that contact information for the other service information identified in the SNPRM is provided, but not for TDG Aerospace.

We agree partially. We do not agree to revise paragraph (v) of the SNPRM, because that paragraph is not restated in this final rule. However, we do agree to provide contact information for TDG Aerospace. We have revised the **ADDRESSES** section of this AD to include this contact information.

Additional Changes Made to This AD

We have revised paragraph (h) of this AD to clarify when a placard is not necessary. We have determined that the second to last sentence of paragraph (h) of this AD should also refer to AD 2001–08–24, Amendment 39–12201 (66 FR 20733, April 25, 2001), for clarity. Operators that choose to maintain the fuel usage restrictions of AD 2002–24–51, Amendment 39–12992 (68 FR 10, January 2, 2003), for all airplanes in their fleet do not meet the condition to terminate AD 2002–24–51 and AD 2001–08–24 until the actions required by paragraphs (g) and (i) of this AD are accomplished on all airplanes in their fleet. Therefore, those operators are otherwise required to comply with the requirements of AD 2001–08–24, regardless of whether that AD is mentioned in paragraph (h) of this AD. Therefore, this change does not increase the burden on operators.

We have revised paragraph (s) of this AD to specify that installation of TDG Aerospace UFIs, as provided in that paragraph, must be done in accordance with a method approved by the Manager, Seattle Aircraft Certification Office (ACO), FAA, because referring to the STC now violates Office of the Federal Register (OFR) policies for approval of optional materials ''incorporated by reference'' in rules. We have added Note 5 to this AD to specify that additional guidance on installing TDG Aerospace UFIs can be found in TDG Aerospace STC ST02076LA.

We have also revised paragraph (s) of this AD to clarify the time limit for doing the optional terminating action. Since paragraph (s) of this AD terminates the actions required by paragraphs (g) through (k) of this AD, if done, paragraph (s) of this AD must be accomplished within the earliest time specified among those paragraphs to be considered terminating action; that earliest time is 36 months.

Additionally, we have revised paragraph (s) of this AD to allow the use of alternative placard wording that is approved by an appropriate FAA Principal Operations Inspector, instead of requiring approval of alternative placard wording as an alternative method of compliance in accordance with paragraph (u) of this AD.

We have also revised paragraph (s) of this AD by adding a statement to allow installation of a placard in accordance with paragraph (e) of AD 2002–19–52, Amendment 39–12900 (67 FR 61253, September 30, 2002).

Conclusion

We reviewed the relevant data, considered the comments received, and determined that air safety and the public interest require adopting the AD with the changes described previously—and minor editorial changes. We have determined that these minor changes:

- Are consistent with the intent that was proposed in the SNPRM for correcting the unsafe condition; and
- Do not add any additional burden upon the public than was already proposed in the SNPRM.

We also determined that these changes will not increase the economic burden on any operator or increase the scope of the AD.

Costs of Compliance

We estimate that this AD affects 685 airplanes of U.S. registry.

We estimate the following costs to comply with this AD:

ESTIMATED COSTS

Action	Labor cost	Parts cost	Cost per product	Number of U.S.-registered airplanes	Cost on U.S. operators
Installation of the automatic shutoff system (Boeing Alert Service Bulletin 737–28A1206).	Between 94 and 117 (depending on airplane configuration) work-hours × $85 per hour = Between $7,990 and $9,945.	Between $22,994 and $30,197 (depending on airplane configuration).	Between $30,984 and $40,142.	538	Between $16,669,392 and $21,596,396.
Placard installation, if necessary.	1 work-hour × $85 per hour = $85.	$10	$95	685	$65,075.
AFM revision	1 work-hour × $85 per hour = $85.	None	$85	538	$45,730.
Installation of secondary pump control relays (Boeing Alert Service Bulletin 737–28A1248).	68 work-hours × $85 per hour = $5,780.	$3,274	$9,054	685	$6,201,990.
AWL revision to add 28–AWL–23.	1 work-hour × $85 per hour = $85.	None	$85	685	$58,225.

Authority for This Rulemaking

Title 49 of the United States Code specifies the FAA's authority to issue rules on aviation safety. Subtitle I, section 106, describes the authority of the FAA Administrator. Subtitle VII: Aviation Programs, describes in more detail the scope of the Agency's authority.

We are issuing this rulemaking under the authority described in Subtitle VII, Part A, Subpart III, Section 44701: ''General requirements.'' Under that section, Congress charges the FAA with promoting safe flight of civil aircraft in air commerce by prescribing regulations for practices, methods, and procedures the Administrator finds necessary for safety in air commerce. This regulation is within the scope of that authority because it addresses an unsafe condition that is likely to exist or develop on products identified in this rulemaking action.

Regulatory Findings

This AD will not have federalism implications under Executive Order 13132. This AD will not have a substantial direct effect on the States, on the relationship between the national government and the States, or on the distribution of power and responsibilities among the various levels of government.

For the reasons discussed above, I certify that this AD:

(1) Is not a ''significant regulatory action'' under Executive Order 12866,

(2) Is not a ''significant rule'' under DOT Regulatory Policies and Procedures (44 FR 11034, February 26, 1979),

(3) Will not affect intrastate aviation in Alaska, and

(4) Will not have a significant economic impact, positive or negative, on a substantial number of small entities under the criteria of the Regulatory Flexibility Act.

List of Subjects in 14 CFR Part 39

Air transportation, Aircraft, Aviation safety, Incorporation by reference, Safety.

Adoption of the Amendment

Accordingly, under the authority delegated to me by the Administrator, the FAA amends 14 CFR part 39 as follows:

PART 39—AIRWORTHINESS DIRECTIVES

■ 1. The authority citation for part 39 continues to read as follows:

Authority: 49 U.S.C. 106(g), 40113, 44701.

§ 39.13 [Amended]

■ 2. The FAA amends § 39.13 by adding the following new airworthiness directive (AD):

2011–18–03 The Boeing Company: Amendment 39–16785; Docket No. FAA–2007–28661; Directorate Identifier 2007–NM–013–AD.

Effective Date

(a) This AD is effective September 30, 2011.

Affected ADs

(b) Accomplishing certain requirements of this AD terminates certain requirements of AD 2001–08–24, Amendment 39–12201 (66 FR 20733, April 25, 2001); AD 2002–24–51, Amendment 39–12992 (68 FR 10, January 2, 2003); and AD 2008–24–51, Amendment 39–15781 (74 FR 8155, February 24, 2009). Airworthiness Directive 2002–19–52, Amendment 39–12900 (67 FR 61253, September 30, 2002), is affected by this AD.

Applicability

(c) This AD applies to the airplanes, certificated in any category, identified in paragraphs (c)(1) and (c)(2) of this AD.

(1) The Boeing Company Model 737–600, –700, –700C, –800, and –900 series airplanes, identified in Boeing Alert Service Bulletin 737–28A1206, Revision 2, dated May 21, 2009.

(2) The Boeing Company Model 737–600, –700, –700C, –800, and –900 series airplanes, identified in Boeing Alert Service Bulletin 737–28A1248, Revision 2, dated August 28, 2009.

Note 1: This AD requires revisions to certain operator maintenance documents to include new inspections. Compliance with these inspections is required by 14 CFR 91.403(c). For airplanes that have been previously modified, altered, or repaired in the areas addressed by these inspections, the operator may not be able to accomplish the inspections described in the revisions. In this situation, to comply with 14 CFR 91.403(c), the operator must request approval for an alternative method of compliance (AMOC) according to paragraph (u) of this AD. The request should include a description of changes to the required inspections that will ensure the continued operational safety of the airplane.

Subject

(d) Joint Aircraft System Component (JASC)/Air Transport Association (ATA) of America Code 28, Fuel.

Unsafe Condition

(e) This AD was prompted by fuel system reviews conducted by the manufacturer. We are issuing this AD to prevent center tank fuel pump operation with continuous low pressure, which could lead to friction sparks or overheating in the fuel pump inlet that could create a potential ignition source inside the center fuel tank. These conditions, in combination with flammable fuel vapors, could result in a center fuel tank explosion and consequent loss of the airplane.

Compliance

(f) Comply with this AD within the compliance times specified, unless already done.

Installation of Automatic Shutoff System for the Center Tank Fuel Boost Pumps

(g) For airplanes identified in paragraph 1.A.1. of Boeing Alert Service Bulletin 737–28A1206, Revision 2, dated May 21, 2009: Within 36 months after the effective date of this AD, install an automatic shutoff system for the center tank fuel boost pumps, by accomplishing all of the actions specified in Part 1 and Part 2 of the Accomplishment Instructions of Boeing Alert Service Bulletin 737–28A1206, Revision 2, dated May 21, 2009, except that Figure 1 of this AD must be used in lieu of Sheet 2 of Figure 11 of Boeing Alert Service Bulletin 737–28A1206, Revision 2, dated May 21, 2009. If a placard has been previously installed on the airplane in accordance with paragraph (h) of this AD, the placard may be removed from the flight deck of only that airplane after the automatic shutoff system has been installed. Installing automatic shutoff systems on all airplanes in an operator's fleet, in accordance with this paragraph, terminates the placard installation required by paragraph (h) of this AD for all airplanes in an operator's fleet.

Note 2: Boeing Alert Service Bulletin 737–28A1206, Revision 2, dated May 21, 2009, refers to Boeing Component Service Bulletin 233A3202–28–03, dated January 12, 2006, as an additional source of guidance for replacing the left and right center boost pump switches of the P5–2 fuel control module assembly with new switches and changing the wiring of the P5–2 fuel control module assembly.

BILLING CODE 4910–13–P

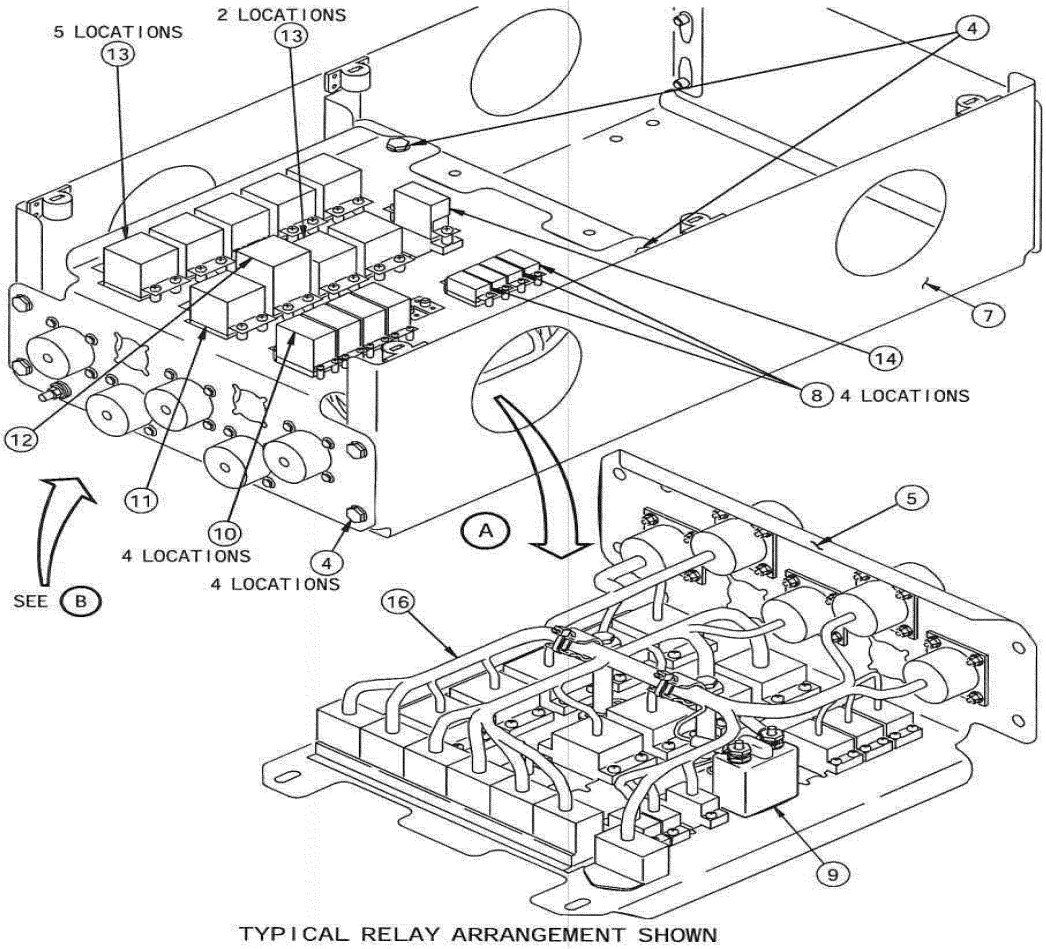

Figure 1

BILLING CODE 4910–13–C

Placard Installation for Mixed Fleet Operation

(h) Prior to or concurrently with installing an automatic shutoff system on any airplane in an operator's fleet, as required by paragraph (g) of this AD, install a placard adjacent to the pilot's primary flight display on all airplanes in the operator's fleet that are not equipped with an automatic shutoff system for the center tank fuel boost pumps. The placard must read as follows (unless alternative placard wording is approved by an appropriate FAA Principal Operations Inspector):

''AD 2002–24–51 fuel usage restrictions required.''

Installing an automatic shutoff system, in accordance with paragraph (g) of this AD, terminates the placard installation required by this paragraph for only that airplane. Installing automatic shutoff systems on all airplanes in an operator's fleet, in accordance with paragraph (g) of this AD, terminates the placard installation required by this paragraph for all airplanes in an operator's

fleet. If operation according to the fuel usage restrictions of AD 2002–24–51, Amendment 39–12992 (68 FR 10, January 2, 2003), and AD 2001–08–24, Amendment 39–12201 (66 FR 20733, April 25, 2001), is maintained until automatic shutoff systems are installed on all airplanes in an operator's fleet, the placard installation specified in this paragraph is not required. Installation of a placard in accordance with paragraph (e) of AD 2002–19–52, Amendment 39–12900 (67 FR 61253, September 30, 2002), is acceptable for compliance with the placard installation requirements of this paragraph; however, terminating action specified in paragraph (g) of AD 2002–19–52 and installation of an automatic shutoff system required by paragraph (g) of this AD must be accomplished on the airplane before the placard is removed from the airplane.

Airplane Flight Manual (AFM) Revision

(i) For airplanes on which Boeing Alert Service Bulletin 737–28A1206, Revision 2, dated May 21, 2009, has been accomplished: At the applicable time specified in paragraph (i)(1) or (i)(2) of this AD, do the actions specified in paragraphs (i)(3) and (i)(4) of this AD.

(1) For airplanes on which the terminating action specified in paragraph (g) of AD 2002–19–52, Amendment 39–12900 (67 FR 61253, September 30, 2002), has been done: Concurrently with accomplishing the actions required by paragraph (g) of this AD.

(2) For airplanes on which the terminating action specified in paragraph (g) of AD 2002–19–52, Amendment 39–12900 (67 FR 61253, September 30, 2002), has not been done: Concurrently with accomplishing the terminating action specified in paragraph (g) of AD 2002–19–52.

(3) Revise Section 1 of the Limitations section of the Boeing 737–600/–700/–700C/–800/–900 AFM to include the following statement. This may be done by inserting a copy of this AD into the AFM.

''Center Tank Fuel Pumps

Intentional dry running of a center tank fuel pump (low pressure light illuminated) is prohibited.''

Note 3: For clarification purposes, the AFM limitations required by AD 2002–19–52, Amendment 39–12900 (67 FR 61253, September 30, 2002), continue to be required until the optional terminating actions specified in paragraph (g) of AD 2002–19–52 have been done.

(4) Revise Section 3 of the Normal Procedures section of the Boeing 737–600/–700/–700C/–800/–900 AFM to include the following statements. This may be done by inserting a copy of this AD into the AFM. Alternative statements that meet the intent of the following requirements may be used if approved by an appropriate FAA Principal Operations Inspector.

''CENTER TANK FUEL PUMPS

Alternative Method of Compliance (AMOC) to AD 2001–08–24 and AD 2002–24–51 for Aircraft With the Automated Center Tank Fuel Pump Shutoff

Center tank fuel pumps must not be ''ON'' unless personnel are available in the flight deck to monitor low pressure lights.

For ground operation, center tank fuel pump switches must not be positioned ''ON'' unless the center tank fuel quantity exceeds 1000 pounds (453 kilograms), except when defueling or transferring fuel. Upon positioning the center tank fuel pump switches ''ON'' verify momentary illumination of each center tank fuel pump low pressure light.

For ground and flight operations, the corresponding center tank fuel pump switch must be positioned ''OFF'' when a center tank fuel pump low pressure light illuminates [1]. Both center tank fuel pump switches must be positioned ''OFF'' when the first center tank fuel pump low pressure light illuminates if the center tank is empty.

[1] When established in a level flight attitude, both center tank pump switches should be positioned ''ON'' again if the center tank contains usable fuel.

Defueling and Fuel Transfer

When transferring fuel or defueling center or main tanks, the fuel pump low pressure lights must be monitored and the fuel pumps positioned to ''OFF'' at the first indication of the fuel pump low pressure [1].

Defueling the main tanks with passengers on board is prohibited if the main tank fuel pumps are powered [2].

Defueling the center tank with passengers on board is prohibited if the center tank fuel pumps are powered and the auto-shutoff system is inhibited [2].

[1] Prior to transferring fuel or defueling, conduct a lamp test of the respective fuel pump low pressure lights.

[2] Fuel may be transferred from tank to tank or the aircraft may be defueled with passengers on board, provided fuel quantity in the tank from which fuel is being taken is maintained at or above 2000 pounds (907 kilograms).''

Note 4: When statements identical to those in paragraphs (i)(3) and (i)(4) of this AD have been included in the general revisions of the Boeing 737–600/–700/–700C/–800/–900 AFM, the general revisions may be inserted into that AFM, and the copy of this AD may be removed from that AFM.

Installation of Secondary Pump Control Relays

(j) For airplanes identified in paragraph 1.A.1. of Boeing Alert Service Bulletin 737–28A1248, Revision 2, dated August 28, 2009: Within 60 months after the effective date of this AD, install one secondary control relay for the electrical control circuit of each of the two center tank fuel boost pumps, in accordance with the Accomplishment Instructions of Boeing Alert Service Bulletin 737–28A1248, Revision 2, dated August 28, 2009.

Airworthiness Limitations (AWL) Revision for AWL No. 28–AWL–23

(k) For airplanes identified in paragraph 1.A.1. of Boeing Alert Service Bulletin 737–28A1248, Revision 2, dated August 28, 2009: Concurrently with accomplishing the actions required by paragraph (j) of this AD, or within 30 days after the effective date of this AD, whichever occurs later, revise the maintenance program by incorporating AWL No. 28–AWL–23 of Subsection E, AWLs—Fuel Systems, of Section 9, Airworthiness Limitations (AWLs) and Certification Maintenance Requirements (CMRs), of the Boeing 737–600/700/800/900 MPD Document, D626A001–CMR, Revision March 2011. The initial compliance time for the actions specified in AWL No. 28–AWL–23 is within 1 year after accomplishing the installation required by paragraph (j) of this AD, or within 1 year after the effective date of this AD, whichever occurs later.

No Alternative Inspections or Inspection Intervals

(l) After accomplishing the applicable actions specified in paragraph (k) of this AD, no alternative inspections or inspection intervals may be used unless the inspections or inspection intervals are approved as an AMOC in accordance with the procedures specified in paragraph (u) of this AD.

Terminating Action for AD 2001–08–24, Amendment 39–12201 (66 FR 20733, April 25, 2001)

(m) Accomplishing the actions required by paragraphs (g), (h), and (i) of this AD, or accomplishing the actions specified in paragraph (s) of this AD, terminates the requirements of paragraph (a) of AD 2001–08–24, Amendment 39–12201 (66 FR 20733, April 25, 2001), for Model 737–600, –700, –700C, –800, and –900 series airplanes that have the automatic shutoff system, or a TDG Aerospace, Inc., universal fault interrupter (UFI), installed. After accomplishing the actions required by paragraphs (g), (h), and (i) of this AD, or accomplishing the actions specified in paragraph (s) of this AD, the AFM limitation required by paragraph (a) of AD 2001–08–24 may be removed from the AFM for those airplanes.

Terminating Action for AD 2002–24–51, Amendment 39–12992 (68 FR 10, January 2, 2003)

(n) Accomplishing the actions required by paragraphs (g), (h), and (i) of this AD, or accomplishing the actions specified in paragraph (s) of this AD, terminates the requirements of paragraph (b) of AD 2002–24–51, Amendment 39–12992 (68 FR 10, January 2, 2003), for Model 737–600, –700, –700C, –800, and –900 series airplanes that have the automatic shutoff system, or a TDG Aerospace, Inc., UFI, installed. After accomplishing the actions required by paragraphs (g), (h), and (i) of this AD, or accomplishing the actions specified in paragraph (s) of this AD, the AFM limitations required by paragraph (b) of AD 2002–24–51 may be removed from the AFM for those airplanes.

Terminating Action for AWL Revision

(o) Incorporating AWL No. 28–AWL–23 into the maintenance program in accordance with paragraph (g)(3) of AD 2008–10–10 R1, Amendment 39–16164 (75 FR 1529, January 12, 2010), terminates the corresponding action required by paragraph (k) of this AD.

Terminating Action for AD 2008–24–51, Amendment 39–15781 (74 FR 8155, February 24, 2009)

(p) Accomplishing the actions required by paragraph (g) of this AD terminates the requirements of paragraph (f) of AD 2008–24–51, Amendment 39–15781 (74 FR 8155, February 24, 2009).

Credit for Actions Accomplished in Accordance With Previous Service Information

(q) Actions accomplished before the effective date of this AD in accordance with Boeing Alert Service Bulletin 737–28A1248, dated December 21, 2006; or Boeing Alert Service Bulletin 737–28A1248, Revision 1, dated January 9, 2008; are considered acceptable for compliance with the corresponding actions specified in paragraph (j) of this AD.

(r) Actions accomplished before the effective date of this AD in accordance with Boeing Alert Service Bulletin 737–28A1206, dated January 11, 2006; or Revision 1, dated January 30, 2008; are considered acceptable for compliance with the corresponding actions specified in paragraph (g) of this AD, provided one of the actions specified in paragraph (r)(1) or (r)(2) of this AD have been done.

(1) The procedures specified in paragraph (f) of AD 2008–24–51, Amendment 39–15781 (74 FR 8155, February 24, 2009), have been accomplished.

(2) The actions specified in Part 3 of the Accomplishment Instructions of Boeing Alert Service Bulletin 737–28A1206, Revision 2, dated May 21, 2009, have been accomplished.

Optional Terminating Action

(s) Installing TDG Aerospace, Inc., UFI, in accordance with a method approved by the Manager, Seattle Aircraft Certification Office (ACO), FAA, within 36 months after the effective date of this AD, terminates the actions required by paragraphs (g) through (k) of this AD; provided that, concurrently with installing a UFI on any airplane in an operator's fleet, a placard is installed adjacent to the pilot's primary flight display on all airplanes in the operator's fleet not equipped with a UFI or an automatic shutoff system. The placard must read as follows (unless alternative placard wording is approved by an appropriate FAA Principal Operations Inspector):

''AD 2002–24–51 fuel usage restrictions required.''

Installation of a placard in accordance with paragraph (h) of this AD is acceptable for compliance with the placard installation required by this paragraph. Installing a TDG Aerospace, Inc., UFI in accordance with this paragraph on an airplane terminates the placard installation required by this paragraph for only that airplane. Installing TDG Aerospace, Inc., UFIs in accordance with this paragraph, or automatic shutoff systems in accordance with paragraph (g) of this AD, on all airplanes in an operator's fleet terminates the placard installation required by this paragraph for all airplanes in an operator's fleet. If operation according to the fuel usage restrictions of AD 2002–24–51, Amendment 39–12992 (68 FR 10, January 2, 2003), and AD 2001–08–24, Amendment 39–12201 (66 FR 20733, April 25, 2001), is maintained until UFIs or automatic shutoff systems are installed on all airplanes in an operator's fleet, the placard installation specified in this paragraph is not required. Installation of a placard in accordance with paragraph (e) of AD 2002–19–52, Amendment 39–12900 (67 FR 61253, September 30, 2002), is acceptable for compliance with the placard installation requirements of this paragraph; however, terminating action specified in paragraph (g) of AD 2002–19–52 and installation of a UFI specified by this paragraph must be accomplished on the airplane before the placard is removed from the airplane.

Note 5: Guidance on installing a TDG Aerospace, Inc., UFI can be found in TDG Aerospace, Inc., Supplemental Type Certificate (STC) ST02076LA.

Credit for Actions Accomplished in Accordance With Previous Service Information

(t) Revising the maintenance program by incorporating AWL No. 28–AWL–23 of a revision specified in paragraphs (t)(1) through (t)(12) of this AD of Subsection G, Airworthiness Limitations—Fuel System AWLs, of Section 9, Airworthiness Limitations (AWLs) and Certification Maintenance Requirements (CMRs), of the Boeing 737–600/700/800/900 MPD Document, D626A001–CMR; or Subsection E, AWLs—Fuel Systems, of Section 9, Airworthiness Limitations (AWLs) and Certification Maintenance Requirements (CMRs), of the Boeing 737–600/700/800/900 MPD Document, D626A001–CMR, Revision February 2011; before the effective date of this AD is considered acceptable for compliance with the corresponding actions specified in paragraph (k) of this AD.

(1) Revision March 2008.
(2) Revision April 2008.
(3) Revision June 2008.
(4) Revision February 2009.
(5) Revision March 2009.
(6) Revision August 2009.
(7) Revision September 2009.
(8) Revision November 2009.
(9) Revision January 2010.
(10) Revision May 2010.
(11) Revision July 2010.
(12) Revision August 2010.

Alternative Methods of Compliance (AMOCs)

(u)(1) The Manager, Seattle ACO, FAA, has the authority to approve AMOCs for this AD, if requested using the procedures found in 14 CFR 39.19. In accordance with 14 CFR 39.19, send your request to your principal inspector or local Flight Standards District Office, as appropriate. If sending information directly to the manager of the ACO, send it to the attention of the person identified in the Related Information section of this AD. Information may be e-mailed to: *9-ANM-Seattle-ACO-AMOC-Requests@faa.gov.*

(2) Before using any approved AMOC, notify your appropriate principal inspector, or lacking a principal inspector, the manager of the local flight standards district office/certificate holding district office.

Related Information

(v) For more information about this AD, contact Tak Kobayashi, Aerospace Engineer, Propulsion Branch, ANM–140S, FAA, Seattle Aircraft Certification Office, 1601 Lind Ave., SW., Renton, Washington 98057–3356; phone: (425) 917–6499; fax (425) 917–6590; e-mail: *Takahisa.Kobayashi@faa.gov.*

Material Incorporated by Reference

(w) You must use the service information contained in table 1 of this AD, as applicable, to do the actions required by this AD, unless the AD specifies otherwise.

TABLE 1—ALL MATERIAL INCORPORATED BY REFERENCE

Document	Revision	Date
Boeing Alert Service Bulletin 737–28A1206	2	May 21, 2009.
Boeing Alert Service Bulletin 737–28A1248	2	August 28, 2009.
AWL No. 28–AWL–23 of Subsection E, AWLs—Fuel Systems of Section 9, Airworthiness Limitations (AWLs) and Certification Maintenance Requirements (CMRs), of the Boeing 737–600/700/800/900 Maintenance Planning Data Document, D626A001–CMR.	March 2011	March 2011.

(1) The Director of the Federal Register approved the incorporation by reference of the service information contained in table 1 of this AD under 5 U.S.C. 552(a) and 1 CFR part 51.

(2) For Boeing service information identified in this AD, contact Boeing Commercial Airplanes, Attention: Data & Services Management, P.O. Box 3707, MC 2H–65, Seattle, Washington 98124–2207; telephone 206–544–5000, extension 1; fax

206–766–5680; e-mail *me.boecom@boeing.com;* Internet *https://www.myboeingfleet.com.*

(3) You may review copies of the service information at the FAA, Transport Airplane Directorate, 1601 Lind Avenue, SW., Renton, Washington. For information on the availability of this material at the FAA, call 425–227–1221.

(4) You may also review copies of the service information that is incorporated by reference at the National Archives and Records Administration (NARA). For information on the availability of this material at an NARA facility, call 202–741–6030, or go to *http://www.archives.gov/federal_register/code_of_federal_regulations/ibr_locations.html.*

Issued in Renton, Washington, on August 12, 2011.

Ali Bahrami,

Manager, Transport Airplane Directorate, Aircraft Certification Service.

[FR Doc. 2011–21617 Filed 8–25–11; 8:45 am]

BILLING CODE 4910–13–P

DEPARTMENT OF TRANSPORTATION

Federal Aviation Administration

14 CFR Part 39

[Docket No. FAA–2011–0823; Directorate Identifier 2011–SW–018–AD; Amendment 39–16765; AD 2011–17–01]

RIN 2120–AA64

Airworthiness Directives; Agusta S.p.A. Model A109A, A109A II, A109C, and A109K2 Helicopters

AGENCY: Federal Aviation Administration (FAA), DOT.

ACTION: Final rule; request for comments.

SUMMARY: This amendment supersedes an existing emergency airworthiness directive (EAD) for the specified Agusta S.p.A. (Agusta) model helicopters. That EAD currently requires inspecting the main rotor scissor fitting assembly to determine if there are 2 washers installed under the head of each main rotor scissor fitting assembly fixing bolt (fixing bolt). If there are not 2 washers installed under the head of each fixing bolt, that EAD requires replacing each fixing bolt and installing 2 washers under the head of each fixing bolt. This superseding airworthiness directive (AD) is prompted by the determination that a wrong part number (P/N) for the main rotor scissor fitting assembly was listed in the EAD. This AD retains the requirements of the EAD and corrects a P/N for the main rotor scissor fitting assembly. The actions specified by this AD are intended to prevent a crack in a fixing bolt, failure of a fixing bolt, and subsequent loss of control of the helicopter.

DATES: Effective September 12, 2011.

The incorporation by reference of certain publications listed in the regulations is approved by the Director of the Federal Register as of September 12, 2011.

Comments for inclusion in the Rules Docket must be received on or before October 25, 2011.

ADDRESSES: Use one of the following addresses to submit comments on this AD:

- *Federal eRulemaking Portal:* Go to *http://www.regulations.gov.* Follow the instructions for submitting comments.
- *Fax:* (202) 493–2251.
- *Mail:* U.S. Department of Transportation, Docket Operations, M–30, West Building Ground Floor, Room W12–140, 1200 New Jersey Avenue, SE., Washington, DC 20590.
- *Hand Delivery:* U.S. Department of Transportation, Docket Operations, M–30, West Building Ground Floor, Room W12–140, 1200 New Jersey Avenue, SE., Washington, DC 20590, between 9 a.m. and 5 p.m., Monday through Friday, except Federal holidays.

You may get the service information identified in this AD from Agusta Westland, Customer Support & Services, Via Per Tornavento 15, 21019 Somma Lombardo (VA) Italy, ATTN: Giovanni Cecchelli; telephone 39- 0331–711133; fax 39 0331 711180; or at *http://www.agustawestland.com/technical-bullettins.*

Examining the Docket: You may examine the docket that contains the AD, any comments, and other information on the Internet at *http://www.regulations.gov,* or in person at the Docket Operations office between 9 a.m. and 5 p.m., Monday through Friday, except Federal holidays. The Docket Operations office (telephone (800) 647–5527) is located in Room W12–140 on the ground floor of the West Building at the street address stated in the **ADDRESSES** section. Comments will be available in the AD docket shortly after receipt.

FOR FURTHER INFORMATION CONTACT: DOT/FAA Southwest Region, Sharon Miles, Aviation Safety Engineer, Rotorcraft Directorate, Regulations and Policy Group, ASW–111, 2601 Meacham Blvd., Fort Worth, Texas 76137, telephone (817) 222–5122, fax (817) 222–5961.

SUPPLEMENTARY INFORMATION:

Discussion

On January 13, 2010, we issued EAD 2010–02–51 for the Agusta Model A109A, A109A II, A109C, and A109K2 helicopters, which requires, within 5 hours time-in-service (TIS), inspecting the main rotor scissor fitting assembly, P/N 109–0110–67 and P/N 109–0110–58, to determine if there were 2 washers installed under the head of each fixing bolt, P/N 109–0101–78–5. That action was prompted by an incident where 2 of the 3 installed fixing bolts on a Model A109K2 helicopter had cracked in flight. The manufacturer's investigation revealed that the crack was caused by inadequate information in the technical publication for installing the fixing bolts. This condition, if not detected and corrected, could result in failure of a fixing bolt and subsequent loss of control of the helicopter.

Since issuing EAD 2010–02–51, we have determined that the EAD contains an incorrect P/N for the main rotor scissor fitting assembly as listed in paragraph (a) of the Compliance section. The EAD states P/N ''109–0110–58'' and the correct P/N is ''109–0101–58''. Therefore, we are issuing this superseding AD to correct a P/N for the main rotor scissor fitting assembly.

The European Aviation Safety Agency (EASA), which is the Technical Agent for the Member States of the European Union, has issued EASA Emergency AD 2009–0274–E, dated December 18, 2009 (EAD 2009–0274–E) to correct an unsafe condition for the Agusta Model A109A, A109A II, A109C, and A109K2 model helicopters. EASA states that failure of the fixing bolt ''might lead to loss of control of the helicopter.''

Related Service Information

Agusta has issued Mandatory Alert Bollettino Tecnico (BT) No. 109K–53 for Model A109K2 helicopters and Mandatory Alert BT No. 109–131 for Model A109A, A109A II, and A109C helicopters, both dated December 18, 2009. The BTs specify a one-time inspection for correct installation of the main rotor scissor fitting assembly by determining if 2 washers are installed under the head of each fixing bolt. If 2 washers are not installed under the head of each fixing bolt, the BTs specify replacing each fixing bolt with an airworthy fixing bolt and installing 2 washers under the head of each fixing bolt. EASA classified this service bulletin as mandatory and issued EAD No. 2009–0274–E to ensure the continued airworthiness of these helicopters.

FAA's Evaluation and Unsafe Condition Determination

These helicopters have been approved by the aviation authority of Italy, and are approved for operation in the United States. Pursuant to our bilateral

agreement with Italy, EASA, their technical representative, has notified us of the unsafe condition described in the EASA emergency AD. We are issuing this superseding AD because we evaluated all information provided by EASA and determined the unsafe condition exists and is likely to exist or develop on other helicopters of these same type designs. Therefore, this AD is being issued to prevent a crack in a fixing bolt, failure of a fixing bolt, and subsequent loss of control of the helicopter. This AD requires, within 5 hours TIS, inspecting the main rotor scissor fitting assembly to determine if there are two washers installed under the head of each fixing bolt. If 2 washers are not installed under the head of each fixing bolt, this AD requires, within 25 hours TIS after making that determination, replacing all 3 fixing bolts and installing 2 washers under the head of each fixing bolt. The actions must be accomplished by following specified portions of the previously described service bulletins.

The short compliance time involved is required because the previously described critical unsafe condition can adversely affect the structural integrity and controllability of the helicopter. Therefore, because these actions are required within a very short period of time, this AD must be issued immediately.

Since a situation exists that requires the immediate adoption of this regulation, it is found that notice and opportunity for prior public comment hereon are impracticable because of the short compliance time, and that good cause exists for making this amendment effective in less than 30 days.

Differences Between This AD and the EASA AD

This AD differs from the EASA AD in that EASA uses the term ''flight hours'' when referring to compliance times, and we use the term ''hours time-in-service''. Also, after complying with paragraph (a) of this AD, we require the fixing bolts to be replaced within 25 hours TIS, and the EASA AD requires the fixing bolts to be replaced within 25 flight hours after the effective date of the AD or by April 30, 2010.

Costs of Compliance

We estimate that this AD will affect 79 helicopters of U.S. registry. Each inspection will take about 15 minutes, and replacing a fixing bolt will take about 3 hours. The average labor rate is $85 per work-hour. Required parts will cost approximately $153 per helicopter for the bolts and washers. Based on these figures, we estimate the total cost on U.S. operators to be $4,943, assuming that each helicopter is inspected and that 8 helicopters require replacement of the 3 bolts and 6 washers.

Comments Invited

This AD is a final rule that involves requirements that affect flight safety and was not preceded by notice and an opportunity for public comment; however, we invite you to submit any written data, views, or arguments regarding this AD. Send your comments to an address listed under **ADDRESSES**. Include ''Docket No. FAA–2011–0823; Directorate Identifier 2011–SW–018–AD'' at the beginning of your comments. We specifically invite comments on the overall regulatory, economic, environmental, and energy aspects of this AD. We will consider all comments received by the closing date and may amend this AD because of those comments.

We will post all comments we receive, without change, to *http://www.regulations.gov*, including any personal information you provide. We will also post a report summarizing each substantive verbal contact with FAA personnel concerning this AD. Using the search function of the docket Web site, you can find and read the comments to any of our dockets, including the name of the individual who sent the comment. You may review the DOT's complete Privacy Act Statement in the **Federal Register** published on April 11, 2000 (65 FR 19477–78).

Regulatory Findings

We have determined that this AD will not have federalism implications under Executive Order 13132. This AD will not have a substantial direct effect on the States, on the relationship between the national Government and the States, or on the distribution of power and responsibilities among the various levels of government.

For the reasons discussed above, I certify that the regulation:

1. Is not a ''significant regulatory action'' under Executive Order 12866;

2. Is not a ''significant rule'' under the DOT Regulatory Policies and Procedures (44 FR 11034, February 26, 1979); and

3. Will not have a significant economic impact, positive or negative, on a substantial number of small entities under the criteria of the Regulatory Flexibility Act.

We prepared an economic evaluation of the estimated costs to comply with this AD. See the AD docket to examine the economic evaluation.

Authority for This Rulemaking

Title 49 of the United States Code specifies the FAA's authority to issue rules on aviation safety. Subtitle I, Section 106, describes the authority of the FAA Administrator. Subtitle VII, Aviation Programs, describes in more detail the scope of the Agency's authority.

We are issuing this rulemaking under the authority described in Subtitle VII, Part A, Subpart III, Section 44701, ''General requirements.'' Under that section, Congress charges the FAA with promoting safe flight of civil aircraft in air commerce by prescribing regulations for practices, methods, and procedures the Administrator finds necessary for safety in air commerce. This regulation is within the scope of that authority because it addresses an unsafe condition that is likely to exist or develop on products identified in this rulemaking action.

List of Subjects in 14 CFR Part 39

Air transportation, Aircraft, Aviation safety, Incorporation by reference, Safety.

Adoption of the Amendment

Accordingly, under the authority delegated to me by the Administrator, the FAA amends 14 CFR part 39 as follows:

PART 39—AIRWORTHINESS DIRECTIVES

■ 1. The authority citation for Part 39 continues to read as follows:

Authority: 49 U.S.C. 106(g), 40113, 44701.

§ 39.13 [Amended]

■ 2. The FAA amends § 39.13 by adding a new airworthiness directive (AD) to read as follows:

2011–17–01 AGUSTA S.p.A. (Agusta): Amendment 39–16765; Docket No. FAA–2011–0823; Directorate Identifier 2011–SW–018–AD; supersedes Emergency AD 2010–02–51, issued January 13, 2010.

Applicability: Model A109A, A109A II, A109C, and A109K2 helicopters, certificated in any category.

Compliance: Required as indicated, unless accomplished previously.

To prevent a crack in a main rotor scissor fitting assembly fixing bolt (fixing bolt), failure of a fixing bolt, and subsequent loss of control of the helicopter, accomplish the following:

(a) Within 5 hours time-in-service (TIS), inspect the main rotor scissor fitting assembly, part number (P/N) 109–0110–67 or P/N 109–0101–58, to determine if there are 2 washers, P/N NAS1149C0432R and P/N NAS1149C0463R, installed under the head of each fixing bolt, P/N 109–0101–78–5, as

depicted in Figure 1 of Agusta Mandatory Alert Bollettino Tecnico (BT) No. 109K–53 for Model A109K2 helicopters, and Mandatory Alert BT No. 109–131 for Model A109A, A109A II, and A109C helicopters, both dated December 18, 2009.

(b) If 2 washers are not installed under the head of each fixing bolt, within 25 hours TIS of complying with paragraph (a) of this AD, replace each fixing bolt and install 2 washers under the head of each fixing bolt as depicted in Figures 1 and 2, and by following the Compliance Instructions, Part II, paragraphs 1. through 3.5., of the BT for your helicopter.

(c) To request a different method of compliance or a different compliance time for this AD, follow the procedures in 14 CFR 39.19. Contact the Manager, Safety Management Group, ATTN: DOT/FAA Southwest Region, Sharon Miles, Aviation Safety Engineer, Rotorcraft Directorate, ASW–111, 2601 Meacham Blvd., Fort Worth, Texas 76137, telephone (817) 222–5122, fax (817) 222–5961, for information about previously approved alternative methods of compliance.

(d) The Joint Aircraft System/Component Code is 6220: Main Rotor Head.

(e) The inspection and replacement shall be done in accordance with the specified portions of Agusta Mandatory Alert Bollettino Tecnico No. 109K–53 or Agusta Mandatory Alert Bollettino Tecnico No. 109–131, both dated December 18, 2009. The Director of the Federal Register approved this incorporation by reference in accordance with 5 U.S.C. 552(a) and 1 CFR part 51. Copies may be obtained from Agusta Westland, Customer Support & Services, Via Per Tornavento 15, 21019 Somma Lombardo (VA) Italy, ATTN: Giovanni Cecchelli; telephone 39–0331–711133; fax 39 0331 711180; or at *http://www.agustawestland.com/technical-bullettins*. Copies may be inspected at the FAA, Office of the Regional Counsel, Southwest Region, 2601 Meacham Blvd., Room 663, Fort Worth, Texas or at the National Archives and Records Administration (NARA). For information on the availability of this material at NARA, call 202–741–6030, or go to: *http://www.archives.gov/federal_register/code_of_federal_regulations/ibr_locations.html.*

(f) This amendment becomes effective on September 12, 2011.

Note: The subject of this AD is addressed in European Aviation Safety Agency (Italy) AD No. 2009–0274–E, dated December 18, 2009.

Issued in Fort Worth, Texas, on July 29, 2011.

Kim Smith,

Manager, Rotorcraft Directorate, Aircraft Certification Service.

[FR Doc. 2011–21476 Filed 8–25–11; 8:45 am]

BILLING CODE 4910–13–P

DEPARTMENT OF TRANSPORTATION

Federal Aviation Administration

14 CFR Part 39

[Docket No. FAA–2011–0859 ; Directorate Identifier 2010–SW–052–AD; Amendment 39–16777; AD 2011–17–13]

RIN 2120–AA64

Airworthiness Directives; Eurocopter France (ECF) Model EC120B Helicopters

AGENCY: Federal Aviation Administration, DOT.

ACTION: Final rule; request for comments.

SUMMARY: This amendment adopts a new airworthiness directive (AD) for ECF Model EC120B helicopters. This action requires inserting an emergency procedure appendix from an ECF Emergency Alert Service Bulletin into the Rotorcraft Flight Manual (RFM). This action also requires modifying the emergency switch electrical wiring and performing tests to ensure correct operation of the emergency switch. This action also requires removing the emergency procedure appendix from the RFM after modifying the emergency switch electrical wiring and performing tests to ensure correct operation. This amendment is prompted by the discovery that simultaneously setting the emergency switch to the low position ''CUT–OFF'' and the generator (GENE) pushbutton to ''OFF'' position caused the starter-generator to restart. Investigation revealed that cross-wiring at the emergency switch caused this malfunction. This condition, if not corrected, could lead to the inability to isolate electrical equipment during an emergency, creating the risk of an uncontrolled electrical fire and subsequent loss of control of the helicopter.

DATES: Effective September 12, 2011.

The incorporation by reference of certain publications listed in the regulations is approved by the Director of the Federal Register as of September 12, 2011.

Comments for inclusion in the Rules Docket must be received on or before October 25, 2011.

ADDRESSES: Use one of the following addresses to submit comments on this AD:

- *Federal eRulemaking Portal:* Go to *http://www.regulations.gov*. Follow the instructions for submitting comments.
- *Fax:* 202–493–2251.
- *Mail:* U.S. Department of Transportation, Docket Operations, M–30, West Building Ground Floor, Room W12–140, 1200 New Jersey Avenue, SE., Washington, DC 20590.
- *Hand Delivery:* U.S. Department of Transportation, Docket Operations, M–30, West Building Ground Floor, Room W12–140, 1200 New Jersey Avenue, SE., Washington, DC 20590, between 9 a.m. and 5 p.m., Monday through Friday, except Federal holidays.

You may get the service information identified in this AD from American Eurocopter Corporation, 2701 Forum Drive, Grand Prairie, TX 75053–4005, telephone (800) 232–0323, fax (972) 641–3710, or at *http://www.eurocopter.com*.

Examining the Docket: You may examine the docket that contains the AD, any comments, and other information on the Internet at *http://www.regulations.gov*, or in person at the Docket Operations office between 9 a.m. and 5 p.m., Monday through Friday, except Federal holidays. The Docket Operations office (telephone (800) 647–5527) is located in Room W12–140 on the ground floor of the West Building at the street address stated in the **ADDRESSES** section. Comments will be available in the AD docket shortly after receipt.

FOR FURTHER INFORMATION CONTACT: George Schwab, Aviation Safety Engineer, FAA, Rotorcraft Directorate, Safety Management Group, 2601 Meacham Blvd., Fort Worth, Texas 76137, telephone (817) 222–5114, fax (817) 222–5961.

SUPPLEMENTARY INFORMATION:

Discussion

The European Aviation Safety Agency (EASA), which is the Technical Agent for the Member States of the European Union, has issued EASA AD No. 2010–0078–E, dated April 23, 2010, to correct an unsafe condition for the ECF Model EC120B helicopters. EASA advises that while conducting a ''smoke in the cockpit'' procedure, ECF found that setting the emergency switch to CUT–OFF and the GENE pushbutton to OFF at the same time caused the aircraft starter-generator to ''cut-in again.'' Technical investigations revealed that cross-wiring at the emergency switch caused the malfunction. In this configuration, the ''smoke in the cockpit'' procedure described in the RFM does not isolate the equipment electrical power supply.

Related Service Information

ECF has issued Emergency Alert Service Bulletin No. 24A012, dated April 22, 2010 (EASB), which specifies modifying the emergency switch

electrical wiring and testing the wiring for correct operation of the emergency switch. EASA classified this EASB as mandatory and issued AD No. 2010–0078–E, dated April 23, 2010, to ensure the continued airworthiness of these helicopters.

FAA's Evaluation and Unsafe Condition Determination

This helicopter has been approved by the aviation authority of France and is approved for operation in the United States. Pursuant to our bilateral agreement with France, EASA, their technical representative, has notified us of the unsafe condition described in the MCAI AD. We are issuing this AD because we evaluated all information provided by EASA and determined the unsafe condition exists and is likely to exist or develop on other helicopters of the same type design.

Differences Between This AD and the EASA AD

This AD uses ''hours time-in-service,'' and the EASA AD uses ''flight hours.''

FAA's Determination and Requirements of This AD

This unsafe condition is likely to exist or develop on other helicopters of the same type design. Therefore, this AD is being issued to correct the electrical wiring to allow the isolation of electrical equipment in the event of an emergency and to prevent an uncontrolled electrical fire and subsequent loss of control of the helicopter. This AD requires, before further flight, inserting the appendix from the EASB, paragraph 3.5., ''SMOKE IN THE COCKPIT/CARGO,'' into the ''Emergency Procedure'' section of the RFM. This AD also requires within 15 hours TIS or 30 days, whichever occurs first, modifying the emergency switch electrical wiring by reversing the wires and ground testing the modified electrical wiring. Modifying the emergency switch wiring, obtaining successful ground test results indicating proper operation of the emergency switch, and removing the RFM emergency procedure inserted in compliance with this AD constitutes terminating action for the requirements of this AD.

The short compliance time involved is required because the previously described critical unsafe condition can adversely affect the continued safe flight of the helicopter. Therefore, before further flight, inserting the emergency procedure appendix into the RFM from the EASB is required. Also, modifying the emergency switch electrical wiring, performing ground tests to confirm correct operation of the emergency switch, and removing the emergency procedure appendix from the RFM are required within 15 hours TIS or 30 days, whichever occurs first, a short compliance time, and this AD must be issued immediately.

Since a situation exists that requires the immediate adoption of this regulation, it is found that notice and opportunity for prior public comment hereon are impracticable, and that good cause exists for making this amendment effective in less than 30 days.

Costs of Compliance

We estimate that this AD will affect about 20 helicopters of U.S. registry. We also estimate that it will take about 1 work-hour per helicopter to modify the wiring and to do a ground test. The time required for inserting a page from the EASB into the RFM is minimal. The average labor rate is $85 per work-hour. The wiring will cost about $17 per helicopter. Based on these figures, we estimate the cost of this AD on U.S. operators will be $2,040 for the fleet or $102 per helicopter.

Comments Invited

This AD is a final rule that involves requirements affecting flight safety, and we did not precede it by notice and opportunity for public comment. We invite you to send any written relevant data, views, or arguments about this AD. Send your comments to an address listed under the **ADDRESSES** section. Include ''Docket No. FAA–2011–0859; Directorate Identifier 2010–SW–052–AD'' at the beginning of your comments. We specifically invite comments on the overall regulatory, economic, environmental, and energy aspects of this AD. We will consider all comments received by the closing date and may amend this AD because of those comments.

We will post all comments we receive, without change, to *http://www.regulations.gov*, including any personal information you provide. We will also post a report summarizing each substantive verbal contact with FAA personnel concerning this AD. Using the search function of the docket Web site, you can find and read the comments to any of our dockets, including the name of the individual who sent the comment. You may review the DOT's complete Privacy Act Statement in the **Federal Register** published on April 11, 2000 (65 FR 19477–78).

Regulatory Findings

We have determined that this AD will not have federalism implications under Executive Order 13132. This AD will not have a substantial direct effect on the States, on the relationship between the national Government and the States, or on the distribution of power and responsibilities among the various levels of government.

For the reasons discussed above, I certify that the regulation:

1. Is not a ''significant regulatory action'' under Executive Order 12866;

2. Is not a ''significant rule'' under the DOT Regulatory Policies and Procedures (44 FR 11034, February 26, 1979); and

3. Will not have a significant economic impact, positive or negative, on a substantial number of small entities under the criteria of the Regulatory Flexibility Act.

We prepared an economic evaluation of the estimated costs to comply with this AD. See the AD docket to examine the economic evaluation.

Authority for This Rulemaking

Title 49 of the United States Code specifies the FAA's authority to issue rules on aviation safety. Subtitle I, Section 106, describes the authority of the FAA Administrator. Subtitle VII, Aviation Programs, describes in more detail the scope of the Agency's authority.

We are issuing this rulemaking under the authority described in Subtitle VII, Part A, Subpart III, Section 44701, ''General requirements.'' Under that section, Congress charges the FAA with promoting safe flight of civil aircraft in air commerce by prescribing regulations for practices, methods, and procedures the Administrator finds necessary for safety in air commerce. This regulation is within the scope of that authority because it addresses an unsafe condition that is likely to exist or develop on products identified in this rulemaking action.

List of Subjects in 14 CFR Part 39

Air transportation, Aircraft, Aviation safety, Incorporation by reference, Safety.

Adoption of the Amendment

Accordingly, under the authority delegated to me by the Administrator, the FAA amends 14 CFR part 39 as follows:

PART 39—AIRWORTHINESS DIRECTIVES

■ 1. The authority citation for part 39 continues to read as follows:

Authority: 49 U.S.C. 106(g), 40113, 44701.

§ 39.13 [Amended]

■ 2. Section 39.13 is amended by adding a new airworthiness directive to read as follows:

2011–17–13 EUROCOPTER FRANCE: Amendment 39–16777; Docket No. FAA–2011–0859; Directorate Identifier 2010–SW–052–AD.

Applicability: Model EC120B helicopters, serial number (S/N) 1500, 1511 through 1630, 1632, 1634, and 1636, certificated in any category.

Compliance: Required as indicated, unless accomplished previously.

To prevent nonisolation of electrical equipment creating the risk of an uncontrolled electrical fire, do the following:

(a) Before further flight, insert the ''Appendix'' from the Eurocopter Emergency Alert Service Bulletin No. 24A012, dated April 22, 2010 (EASB), paragraph 3.5., ''SMOKE IN THE COCKPIT/CARGO,'' into the Emergency Procedure section of the Rotorcraft Flight Manual (RFM). After complying with paragraph (b) of this AD, remove the Appendix from the RFM.

(b) Within 15 hours time-in-service (TIS) or 30 days, whichever occurs first, modify the emergency switch electrical wiring by reversing the wires as depicted in Figure 2 and by following the Accomplishment Instructions, paragraph 2.B.1 through 2.B.3, of the EASB. Ground test the modified electrical wiring by following the Accomplishment Instructions, paragraph 2.B.4, of the EASB.

(c) Modifying the emergency switch wiring, obtaining successful ground test results indicating proper operation of the emergency switch, and removing the RFM emergency procedure inserted in complying with paragraph (a) of this AD constitutes terminating action for the requirements of this AD.

(d) To request a different method of compliance or a different compliance time for this AD, follow the procedures in 14 CFR 39.19. Contact the Manager, Safety Management Group, ATTN: George Schwab, Aviation Safety Engineer, FAA, 2601 Meacham Blvd., Fort Worth, Texas 76137; telephone: (817–222–5114); fax: 817–222–5961, for information about previously approved alternative methods of compliance.

(e) The Joint Aircraft System/Component (JASC) Code is 2497: Electrical Power System Wiring.

(f) Modify the electrical wiring and perform the ground tests by following specified portions of Eurocopter Emergency Alert Service Bulletin No. 24A012, dated April 22, 2010. The Director of the Federal Register approved this incorporation by reference in accordance with 5 U.S.C. 552(a) and 1 CFR part 51. Copies may be obtained from American Eurocopter Corporation, 2701 Forum Drive, Grand Prairie, TX 75053–4005, telephone (800) 232–0323, fax (972) 641–3710, or at *http://www.eurocopter.com*. Copies may be inspected at the FAA, Office of the Regional Counsel, Southwest Region, 2601 Meacham Blvd., Room 663, Fort Worth, Texas, or at the National Archives and Records Administration (NARA). For information on the availability of this material at NARA, call 202–741–6030, or go to: *http://www.archives.gov/federal_register/code_of_federal_regulations/ibr_locations.html.*

(g) This amendment becomes effective on September 12, 2011.

Note: The subject of this AD is addressed in European Aviation Safety Agency AD No. 2010–0078–E, dated April 23, 2010.

Issued in Fort Worth, Texas, on August 5, 2011.

Kim Smith,

Manager, Rotorcraft Directorate, Aircraft Certification Service.

[FR Doc. 2011–21473 Filed 8–25–11; 8:45 am]

BILLING CODE 4910–13–P

DEPARTMENT OF TRANSPORTATION

Federal Aviation Administration

14 CFR Part 71

[Docket No. FAA–2011–0855; Amendment No. 71–43]

Airspace Designations; Incorporation by Reference

AGENCY: Federal Aviation Administration (FAA), DOT.

ACTION: Final rule.

SUMMARY: This action amends Title 14 Code of Federal Regulations (14 CFR) part 71 relating to airspace designations to reflect the approval by the Director of the Federal Register of the incorporation by reference of FAA Order 7400.9V, Airspace Designations and Reporting Points. This action also explains the procedures the FAA will use to amend the listings of Class A, B, C, D, and E airspace areas; air traffic service routes; and reporting points incorporated by reference.

DATES: These regulations are effective September 15, 2011, through September 15, 2012. The incorporation by reference of FAA Order 7400.9V is approved by the Director of the Federal Register as of September 15, 2011, through September 15, 2012.

FOR FURTHER INFORMATION CONTACT: Sarah A. Combs, Airspace, Regulations and ATC Procedures Group, Office of Airspace Services, Federal Aviation Administration, 800 Independence Avenue, SW., Washington, DC 20591; telephone: (202) 267–8783.

SUPPLEMENTARY INFORMATION:

History

FAA Order 7400.9U, Airspace Designations and Reporting Points, effective September 15, 2010, listed Class A, B, C, D and E airspace areas; air traffic service routes; and reporting points. Due to the length of these descriptions, the FAA requested approval from the Office of the Federal Register to incorporate the material by reference in the Federal Aviation Regulations section 71.1, effective September 15, 2010, through September 15, 2011. During the incorporation by reference period, the FAA processed all proposed changes of the airspace listings in FAA Order 7400.9U in full text as proposed rule documents in the **Federal Register**. Likewise, all amendments of these listings were published in full text as final rules in the **Federal Register**. This rule reflects the periodic integration of these final rule amendments into a revised edition of Order 7400.9V, Airspace Designations and Reporting Points. The Director of the Federal Register has approved the incorporation by reference of FAA Order 7400.9V in section 71.1, as of September 15, 2011 through September 15, 2012. This rule also explains the procedures the FAA will use to amend the airspace designations incorporated by reference in part 71. Sections 71.5, 71.15, 71.31, 71.33, 71.41, 71.51, 71.61, 71.71, and 71.901 are also updated to reflect the incorporation by reference of FAA Order 7400.9V.

The Rule

This action amends Title 14 Code of Federal Regulations (14 CFR) part 71 to reflect the approval by the Director of the Federal Register of the incorporation by reference of FAA Order 7400.9V, effective September 15, 2011, through September 15, 2012. During the incorporation by reference period, the FAA will continue to process all proposed changes of the airspace listings in FAA Order 7400.9V in full text as proposed rule documents in the **Federal Register**. Likewise, all amendments of these listings will be published in full text as final rules in the **Federal Register**. The FAA will periodically integrate all final rule amendments into a revised edition of the Order, and submit the revised edition to the Director of the Federal Register for approval for incorporation by reference in section 71.1.

The FAA has determined that this action: (1) Is not a ''significant regulatory action'' under Executive Order 12866; (2) is not a ''significant rule'' under DOT Regulatory Policies and Procedures (44 FR 11034; February 26, 1979); and (3) does not warrant preparation of a regulatory evaluation as the anticipated impact is so minimal. This action neither places any new restrictions or requirements on the public, nor changes the dimensions or operation requirements of the airspace listings incorporated by reference in part 71.

List of Subjects in 14 CFR Part 71

Airspace, Incorporation by reference, Navigation (air).

Adoption of the Amendment

In consideration of the foregoing, the Federal Aviation Administration amends 14 CFR part 71 as follows:

PART 71—DESIGNATION OF CLASS A, B, C, D, AND E AIRSPACE AREAS; AIR TRAFFIC SERVICE ROUTES; AND REPORTING POINTS

■ 1. The authority citation for part 71 continues to read as follows:

Authority: 49 U.S.C. 106(g), 40103, 40113, 40120; E.O. 10854, 24 FR 9565, 3 CFR 1959–1963 Comp., p. 389.

■ 2. Section 71.1 is revised to read as follows:

§ 71.1 Applicability.

A listing for Class A, B, C, D, and E airspace areas; air traffic service routes; and reporting points can be found in FAA Order 7400.9V, Airspace Designations and Reporting Points, dated August 9, 2011. This incorporation by reference was approved by the Director of the Federal Register in accordance with 5 U.S.C. 552 (a) and 1 CFR part 51. The approval to incorporate by reference FAA Order 7400.9V is effective September 15, 2011, through September 15, 2012. During the incorporation by reference period, proposed changes to the listings of Class A, B, C, D, and E airspace areas; air traffic service routes; and reporting points will be published in full text as proposed rule documents in the **Federal Register**. Amendments to the listings of Class A, B, C, D, and E airspace areas; air traffic service routes; and reporting points will be published in full text as final rules in the **Federal Register**. Periodically, the final rule amendments will be integrated into a revised edition of the Order and submitted to the Director of the Federal Register for approval for incorporation by reference in this section. Copies of FAA Order 7400.9V may be obtained from Airspace, Regulations and ATC Procedures Group, Federal Aviation Administration, 800 Independence Avenue, SW., Washington, DC 20591, (202) 267–8783. An electronic version of the Order is available on the FAA Web site at *http://www.faa.gov/air_traffic/publications.* Copies of FAA Order 7400.9V may be inspected in Docket No. FAA–2011–0855; Amendment No. 71–43 on *http;//www.regulations.gov.* A copy of FAA Order 7400.9V may be inspected at the National Archives and Records Administration (NARA). For information on the availability of this material at NARA, call 202–741–6030, or go to: *http://www.archives.gov/federal-register/cfr/ibr-locations.html.*

§ 71.5 [Amended]

■ 3. Section 71.5 is amended by removing the words ''FAA Order 7400.9U'' and adding, in their place, the words ''FAA Order 7400.9V.''

§ 71.15 [Amended]

■ 4. Section 71.15 is amended by removing the words ''FAA Order 7400.9U'' and adding, in their place, the words ''FAA Order 7400.9V.''

§ 71.31 [Amended]

■ 5. Section 71.31 is amended by removing the words ''FAA Order 7400.9U'' and adding, in their place, the words ''FAA Order 7400.9V.''

§ 71.33 [Amended]

■ 6. Paragraph (c) of § 71.33 is amended by removing the words ''FAA Order 7400.9U'' and adding, in their place, the words ''FAA Order 7400.9V.''

§ 71.41 [Amended]

■ 7. Section 71.41 is amended by removing the words ''FAA Order 7400.9U'' and adding, in their place, the words ''FAA Order 7400.9V.''

§ 71.51 [Amended]

■ 8. Section 71.51 is amended by removing the words ''FAA Order 7400.9U'' and adding, in their place, the words ''FAA Order 7400.9V.''

§ 71.61 [Amended]

■ 9. Section 71.61 is amended by removing the words ''FAA Order 7400.9U'' and adding, in their place, the words ''FAA Order 7400.9V.''

§ 71.71 [Amended]

■ 10. Paragraphs (b), (c), (d), (e), and (f) of § 71.71 are amended by removing the words ''FAA Order 7400.9U'' and adding, in their place, the words ''FAA Order 7400.9V.''

§ 71.901 [Amended]

■ 11. Paragraph (a) of § 71.901 is amended by removing the words ''FAA Order 7400.9U'' and adding, in their place, the words ''FAA Order 7400.9V.''

Issued in Washington, DC, on August 22, 2011.

Gary A. Norek,

Acting Manager, Airspace, Regulations, & ATC Procedures Group.

[FR Doc. 2011–21832 Filed 8–25–11; 8:45 am]

BILLING CODE 4910–13–P

DEPARTMENT OF HOMELAND SECURITY

Coast Guard

33 CFR Part 100

[Docket No. USCG–2009–0558]

RIN 1625–AA08

Eleventh Coast Guard District Annual Marine Events

AGENCY: Coast Guard, DHS.

ACTION: Final rule.

SUMMARY: The Coast Guard is updating and consolidating the list of marine events occurring annually within the Eleventh Coast Guard District. These amendments standardize the special local regulations language, update listed events, delete events that are no longer occurring, add new unlisted annual events to the regulation, and standardize the format for all tables in these four sections. When these special local regulations are activated, and thus subject to enforcement, this rule would enable vessel movement restrictions in the regulated area.

DATES: This rule is effective September 26, 2011.

ADDRESSES: Comments and material received from the public, as well as documents mentioned in this preamble as being available in the docket, are part of docket USCG–2009–0558 and are available online by going to *http://www.regulations.gov,* inserting USCG–2009–0558 in the ''Keyword'' box, and then clicking ''Search.'' This material is also available for inspection or copying at the Docket Management Facility (M–30), U.S. Department of Transportation, West Building Ground Floor, Room W12–140, 1200 New Jersey Avenue, SE., Washington, DC 20590, between 9 a.m. and 5 p.m., Monday through Friday, except Federal holidays.

FOR FURTHER INFORMATION CONTACT: If you have questions on this rule, call or e-mail Lieutenant Lucas Mancini, Eleventh Coast Guard District Prevention Division, Waterways Management Branch, Coast Guard; telephone 510–437–3801, e-mail *Lucas.W.Mancini@uscg.mil.* If you have questions on viewing or submitting material to the docket, call Renee V. Wright, Program Manager, Docket Operations, telephone 202–366–9826.

SUPPLEMENTARY INFORMATION:

Regulatory Information

On February 9th, 2011, we published a notice of proposed rulemaking (NPRM) entitled Eleventh Coast Guard

District Annual Marine Events in the **Federal Register** (76 FR 27). On May 26, 2011, we published a supplemental notice of proposed rulemaking (SNPRM) of the same title to add clarifying language and change two event dates in the proposed rule (76 FR 30575). We received no comments on either the NPRM or the SNPRM or a request for public meeting. A public meeting was not held.

Background and Purpose

Marine events are annually held on a recurring basis on the navigable waters within the Eleventh Coast Guard District. These events include sailing regattas, powerboat races, rowboat races, parades, and swim events. Many of the annual events requiring special local regulations do not currently reflect changes in actual dates and other required information.

The effects of these special local regulations are to restrict general navigation in the vicinity of the events, from the start of each event until the conclusion of that event. These areas will be patrolled at the discretion of the Coast Guard. Except for persons or vessels authorized by the Coast Guard Patrol Commander, no person or vessel may enter or remain in the regulated area. These regulations are needed to keep spectators and vessels a safe distance away from the specified events to ensure the safety of participants, spectators, and transiting vessels.

Discussion of Rule

The Coast Guard is revising 33 CFR 100.1101, 100.1102, 100.1103, and adding 33 CFR 100.1104. The changes effectively update the outdated special local regulations. The amendments and addition address minor corrections required in the regulatory text.

The Coast Guard is amending 33 CFR 100.1101, 1101.1102, and 100.1103 by replacing paragraphs a and b of each section to conform to a uniform regulatory text for these sections of 33 CFR part 100 that govern annual marine events within the Eleventh Coast Guard District. Table 1 for each of the listed sections is being updated as follows: existing events that continue to occur are being updated with current information, previously unlisted events are being added, and listed events that the Coast Guard has been unable to verify as continuing are being deleted. The addition of a 33 CFR 100.1104 is needed to ease administrative burden on the event sponsors and the public by adding a specific section for annual marine events requiring special local regulations in the Los Angeles Long Beach Captain of the Port Zone.

This rule will revise the text of 33 CFR 100.1101(b)(3) and 100.1102(b)(3) to delete reference to the Patrol Commander (PATCOM) being located on the lead official patrol vessel. Often the PATCOM is located shoreside in a location that offers a better vantage point to monitor the event. The location of the PATCOM may also be dictated by radio communication requirements, or a need to be co-located with local law enforcement representatives.

Additionally, the Coast Guard will delete the limiting descriptor ''commercial'' in 33 CFR 100.1101(b)(4) and 100.1102(b)(4), as applied to vessels being allowed to transit through the regulated areas when permitted by PATCOM. Often the PATCOM will allow all queued vessels to transit through a zone; for example during a long break in a race. Commercial vessels are normally given preference, but we do sometimes allow recreational vessels to move.

The Coast Guard will change the dates for events listed as occurring in ''late December'' to ''December.'' 33 CFR 100.1101, Table 1, item 5, the San Diego Parade of Lights, and item 6, the Mission Bay Parade of Lights are listed as occurring in late December. For administrative efficiency and to avoid potential problems, the Coast Guard is deleting ''late'' to allow for required flexibility in activating the special local regulations.

Finally, the title of 33 CFR 100.1102 will be revised to clearly indicate the special local regulations that are located in the San Diego Captain of the Port Zone.

Regulatory Analyses

We developed this rule after considering numerous statutes and executive orders related to rulemaking. Below we summarize our analyses based on 13 of these statutes or executive orders.

Regulatory Planning and Review

This rule is not a significant regulatory action under section 3(f) of Executive Order 12866, Regulatory Planning and Review, as supplemented by Executive Order 13563, Improving Regulation and Regulatory Review, and does not require an assessment of potential costs and benefits under section 6(a)(3) of Executive Order 12866 or under section 1 of Executive Order 13563. The Office of Management and Budget has not reviewed it under those Orders.

We expect the economic impact of this rule to be so minimal that a full Regulatory Evaluation is unnecessary. This rule is not a significant regulatory action because the regulations exist for a limited period of time on a limited portion of the waterways. Furthermore, individuals and vessels desiring to use the affected portion of the waterways may seek permission from the Patrol Commander to use the affected areas.

Small Entities

Under the Regulatory Flexibility Act (5 U.S.C. 601–612), we have considered whether this rule would have a significant economic impact on a substantial number of small entities. The term ''small entities'' comprises small businesses, not-for-profit organizations that are independently owned and operated and are not dominant in their fields, and governmental jurisdictions with populations of less than 50,000.

The Coast Guard certifies under 5 U.S.C. 605(b) that this rule would not have a significant economic impact on a substantial number of small entities.

We expect this rule will affect the following entities, some of which may be small entities: The owners and operators of vessels intending to fish, transit, or anchor in the waters affected by these special local regulations. These special local regulations will not have a significant economic impact on a substantial number of small entities for the following reasons: Small vessel traffic will be able to pass safely around the area and vessels engaged in event activities, sightseeing and commercial fishing have ample space outside of the area governed by the special local regulations to engage in these activities. Small entities and the maritime public will be advised of implementation of these special local regulations via public notice to mariners or notice of implementation published in the **Federal Register**.

If you think that your business, organization, or governmental jurisdiction qualifies as a small entity and that this rule would have a significant economic impact on it, please submit a comment (see **ADDRESSES**) explaining why you think it qualifies and how and to what degree this rule would economically affect it.

Assistance for Small Entities

Under section 213(a) of the Small Business Regulatory Enforcement Fairness Act of 1996 (Pub. L. 104–121), we want to assist small entities in understanding this rule so that they can better evaluate its effects on them and participate in the rulemaking. If the rule would affect your small business, organization, or governmental jurisdiction and you have questions concerning its provisions or options for

compliance, please contact Lieutenant Lucas Mancini, Eleventh Coast Guard District Prevention Division, Waterways Management Branch, Coast Guard; telephone 510–437–3801, e-mail *Lucas.W.Mancini@uscg.mil.* The Coast Guard will not retaliate against small entities that question or complain about this rule or any policy or action of the Coast Guard.

Collection of Information

This rule would call for no new collection of information under the Paperwork Reduction Act of 1995 (44 U.S.C. 3501–3520).

Federalism

A rule has implications for federalism under Executive Order 13132, Federalism, if it has a substantial direct effect on State or local governments and would either preempt State law or impose a substantial direct cost of compliance on them. We have analyzed this rule under that Order and have determined that it does not have implications for federalism.

Unfunded Mandates Reform Act

The Unfunded Mandates Reform Act of 1995 (2 U.S.C. 1531–1538) requires Federal agencies to assess the effects of their discretionary regulatory actions. In particular, the Act addresses actions that may result in the expenditure by a State, local, or Tribal government, in the aggregate, or by the private sector of $100,000,000 (adjusted for inflation) or more in any one year. Though this rule would not result in such an expenditure, we do discuss the effects of this rule elsewhere in this preamble.

Taking of Private Property

This rule would not cause a taking of private property or otherwise have taking implications under Executive Order 12630, Governmental Actions and Interference with Constitutionally Protected Property Rights.

Civil Justice Reform

This rule meets applicable standards in sections 3(a) and 3(b)(2) of Executive Order 12988, Civil Justice Reform, to minimize litigation, eliminate ambiguity, and reduce burden.

Protection of Children

We have analyzed this rule under Executive Order 13045, Protection of Children from Environmental Health Risks and Safety Risks. This rule is not an economically significant rule and would not create an environmental risk to health or risk to safety that might disproportionately affect children.

Indian Tribal Governments

This rule does not have Tribal implications under Executive Order 13175, Consultation and Coordination with Indian Tribal Governments, because it would not have a substantial direct effect on one or more Indian Tribes, on the relationship between the Federal Government and Indian Tribes, or on the distribution of power and responsibilities between the Federal Government and Indian Tribes.

Energy Effects

We have analyzed this rule under Executive Order 13211, Actions Concerning Regulations That Significantly Affect Energy Supply, Distribution, or Use. We have determined that it is not a ''significant energy action'' under that order because it is not a ''significant regulatory action'' under Executive Order 12866 and is not likely to have a significant adverse effect on the supply, distribution, or use of energy. The Administrator of the Office of Information and Regulatory Affairs has not designated it as a significant energy action. Therefore, it does not require a Statement of Energy Effects under Executive Order 13211.

Technical Standards

The National Technology Transfer and Advancement Act (NTTAA) (15 U.S.C. 272 note) directs agencies to use voluntary consensus standards in their regulatory activities unless the agency provides Congress, through the Office of Management and Budget, with an explanation of why using these standards would be inconsistent with applicable law or otherwise impractical. Voluntary consensus standards are technical standards (*e.g.,* specifications of materials, performance, design, or operation; test methods; sampling procedures; and related management systems practices) that are developed or adopted by voluntary consensus standards bodies.

This rule does not use technical standards. Therefore, we did not consider the use of voluntary consensus standards.

Environment

We have analyzed this rule under Department of Homeland Security Management Directive 023–01 and Commandant Instruction M16475.lD, which guide the Coast Guard in complying with the National Environmental Policy Act of 1969 (NEPA) (42 U.S.C. 4321–4370f), and have concluded this action is one of a category of actions that do not individually or cumulatively have a significant effect on the human environment. This rule is categorically excluded, under figure 2–1, paragraph 34(h), of the Instruction. An environmental analysis checklist and a categorical exclusion determination are available in the docket where indicated under **ADDRESSES**.

List of Subjects in 33 CFR Part 100

Marine safety, Navigation (water), Reporting and recordkeeping requirements, Waterways.

Words of Issuance and Regulatory Text

For the reasons discussed in the preamble, the Coast Guard amends 33 CFR part 100 as follows:

PART 100—MARINE EVENTS

■ 1. The authority citation for part 100 continues to read as follows:

Authority: 33 U.S.C. 1233.

■ 2. Revise § 100.1101 to read as follows:

§ 100.1101 Southern California annual marine events for the San Diego Captain of the Port Zone.

(a) *General.* Special local regulations are established for the events listed in Table 1 of this section. Notice of implementation of these special local regulations will be made by publication in the **Federal Register** 30 days prior to the event for those events without specific dates. In all cases, further information on exact dates, times, and other details concerning the number and type of participants and an exact geographical description of the areas are published by the Eleventh Coast Guard District in the Local Notice to Mariners at least 20 days prior to each event. *Note:* Sponsors of events listed in Table 1 of this section must submit an application each year as required by 33 CFR Part 100 to the cognizant Coast Guard Sector Commander no less than 60 days before the start of the proposed event. Sponsors are informed that ample lead time is required to inform all Federal, state, local agencies, and/or other interested parties and to provide the sponsor the best support to ensure the safety of life and property.

(b) *Special local regulations.* All persons and vessels not registered with the sponsor as participants or as official patrol vessels are considered spectators. The ''official patrol'' consists of any Coast Guard or other vessels assigned or approved by the cognizant Coast Guard Sector Commander to patrol each event.

(1) No spectator shall anchor, block, loiter, nor impede the through transit of participants or official patrol vessels in the regulated areas during all applicable effective dates and times unless cleared

to do so by or through an official patrol vessel.

(2) When hailed and/or signaled by an official patrol vessel, any spectator located within a regulated area during all applicable effective dates and times shall come to an immediate stop.

(3) The Patrol Commander (PATCOM) is empowered to forbid and control the movement of all vessels in the regulated area. The Patrol Commander shall be designated by the cognizant Coast Guard Sector Commander; will be a U.S. Coast Guard commissioned officer, warrant officer, or petty officer to act as the Sector Commander's official representative. As the Sector Commander's representative, the PATCOM may terminate the event any time it is deemed necessary for the protection of life and property. PATCOM may be reached on VHF–FM Channel 13 (156.65 MHz) or 16 (156.8 MHz) when required, by the call sign ''PATCOM''.

(4) The Patrol Commander may, upon request, allow the transit of vessels through regulated areas when it is safe to do so.

(5) The Coast Guard may be assisted by other Federal, state, or local agencies.

TABLE 1 TO § 100.1101

[All coordinates referenced use datum NAD 83]

1. San Diego Fall Classic	
Sponsor	San Diego Rowing Club.
Event Description	Competitive rowing race.
Date	Sunday in November
Location	Mission Bay, CA.
Regulated Area	The waters of Mission Bay to include South Pacific Passage, Fiesta Bay, and the waters around Vacation Isle.
2. California Half Ironman Triathlon	
Sponsor	North America Sport, Inc.
Event Description	Swimming Portion of Triathlon Race.
Date	Saturday in late March or early April.
Location	Oceanside, CA.
Regulated Area	The waters of Oceanside Harbor, CA, including the entrance channel.
3. San Diego Crew Classic	
Sponsor	San Diego Crew Classic.
Event Description	Competitive rowing race.
Date	First Saturday and Sunday in April.
Location	The Mission Bay Park area of San Diego, CA.
Regulated Area	Mission Bay, the portion known as Fiesta Bay.
4. Dutch Shoe Regatta	
Sponsor	San Diego Yacht Club.
Event Description	Sailboat Race.
Date	Friday in late July.
Location	San Diego, CA.
Regulated Area	The waters of San Diego Bay, CA, from Shelter Island to Glorietta Bay.
5. San Diego Parade of Lights	
Sponsor	Greater Shelter Island Association.
Event Description	Boat Parade.
Date	December.
Location	San Diego Harbor.
Regulated Area	The northern portion of the San Diego Main Ship Channel from Seaport Village to the Shelter Island Basin.
6. Mission Bay Parade of Lights	
Sponsor	Mission Bay Yacht Club.
Event Description	Boat Parade.
Date	December.
Location	San Diego, CA.
Regulated Area	Mission Bay, the Main Entrance Channel, Sail Bay, and Fiesta Bay.

■ 3. Revise § 100.1102 to read as follows:

§ 100.1102 Annual marine events on the Colorado River, between Davis Dam (Bullhead City, Arizona) and Headgate Dam (Parker, Arizona) within the San Diego Captain of the Port Zone.

(a) *General.* Special local regulations are established for the events listed in Table 1 of this section. Notice of implementation of these special local regulations will be made by publication in the **Federal Register** 30 days prior to the event for those events without specific dates or by Notice to Mariners 20 Days prior to the event for those

events listing a period for which a firm date is identifiable. In all cases, further information on exact dates, times, and other details concerning the number and type of participants and an exact geographical description of the areas are published by the Eleventh Coast Guard District in the Local Notice to Mariners at least 20 days prior to each event. To be placed on the mailing list for Local Notice to Mariners contact: Commander (dpw), Eleventh Coast Guard District, Coast Guard Island, Building 50–2, Alameda, CA 94501–5100. *Note:* Sponsors of events listed in Table 1 of this section must submit an application each year as required by 33 CFR part 100, subpart A, to the cognizant Coast Guard Sector Commander. Sponsors are informed that ample lead time is required to inform all Federal, state, local agencies, and/or other interested parties and to provide the sponsor the best support to ensure the safety of life and property. A Coast Guard-National Park Service agreement exists for both the Glen Canyon and Lake Mead National Recreational Areas; applicants shall contact the cognizant authority for approval of events in these areas.

(b) *Special local regulations.* All persons and vessels not registered with the sponsor as participants or as official patrol vessels are considered spectators. The ''official patrol'' consists of any Coast Guard, other Federal, state or local law enforcement, and any public or sponsor-provided vessels assigned or approved by the cognizant Coast Guard Sector Commander to patrol each event.

(1) No spectator shall anchor, block, loiter, nor impede the through transit of participants or official patrol vessels in the regulated areas during all applicable effective dates and times unless cleared to do so by or through an official patrol vessel.

(2) When hailed and/or signaled by an official patrol vessel, any spectator located within a regulated area during all applicable effective dates and times shall come to an immediate stop.

(3) The Patrol Commander (PATCOM) is empowered to forbid and control the movement of all vessels in the regulated area. The Patrol Commander shall be designated by the cognizant Coast Guard Sector Commander; will be a U.S. Coast Guard commissioned officer, warrant officer, or petty officer to act as the Sector Commander's official representative. As the Sector Commander's representative, the PATCOM may terminate the event any time it is deemed necessary for the protection of life and property. PATCOM may be reached on VHF–FM Channel 13 (156.65MHz) or 16 (156.8MHz) when required, by the call sign ''PATCOM''.

(4) The Patrol Commander may, upon request, allow the transit of vessels through regulated areas when it is safe to do so.

(5) The Coast Guard may be assisted by other Federal, state, or local agencies.

TABLE 1 TO § 100.1102

[All coordinates referenced use datum NAD 83]

1. Lake Havasu Winter Heat Water-Ski Race	
Sponsor	National Water-ski Racing Association.
Event Description	Water-ski races.
Date	Saturday and Sunday in February.
Location	Lake Havasu, AZ.
Regulated Area	That portion of the lower Colorado River on the Arizona side between Thompson Bay and Copper Canyon.
2. Havasu Landing Regatta	
Sponsor	Southern Outboard Association.
Event Description	Boat Races on closed course.
Date	Saturday and Sunday in February.
Location	Havasu Lake, CA.
Regulated Area	That portion of the lower Colorado River on the California side at Havasu Landing Resort and Casino.
3. Parker International Water-ski Race	
Sponsor	International Water-ski Race Association.
Event Description	Water-ski Show.
Date	Second Saturday and Sunday in March.
Location	Parker, AZ.
Regulated Area	The entire water area of the Colorado River beginning at Bluewater Marina in Parker, AZ, and extending approximately 10 miles to La Paz County Park.
4. Desert Storm	
Sponsor	Lake Racer LLC.
Event Description	Boat Poker Run and Exhibition Runs.
Date	April weekend (3 day event).
Location	Lake Havasu, AZ.
Regulated Area	The waters of the lower Colorado River encompassed by the following boundaries: Boundary one from 34°27′44″ N, 114°20′53″ W to 34°27′51″ N, 114°20′43″ W. Boundary two from 34°26′50″ N, 114°20′41″ W to 34°27′14″ N, 114°20′55″ W. Boundary three from 34°26′10″ N, 114°18′40″ W to 34°25′50″ N, 114°18′52″ W.
5. Lake Havasu Grand Prix	
Sponsor	POPRA.
Event Description	Boat Races on closed course.
Date	April weekend (2 day event).

TABLE 1 TO § 100.1102—Continued

[All coordinates referenced use datum NAD 83]

Location	Lake Havasu, AZ.
Regulated Area	The waters of the lower Colorado River encompassed by the following boundaries: Boundary one from 34°27′44″ N, 114°20′53″ W to 34°27′51″ N, 114°20′43″ W. Boundary two from 34°26′50″ N, 114°20′41″ W to 34°27′14″ N, 114°20′55″ W. Boundary three from 34°26′10″ N, 114°18′40″ W to 34°25′50″ N, 114°18′52″ W.
6. Bluewater Resort and Casino Spring Classic	
Sponsor	Southern California Speedboat Club.
Event Description	Professional High-speed powerboat race, closed course.
Date	Saturday and Sunday in April.
Location	Parker, AZ.
Regulated Area	The Lake Moovalya area of the Colorado River in Parker, AZ.
7. IJSBA World Finals	
Sponsor	International Jet Sports Boating Association.
Event Description	Personal Watercraft Race.
Date	Second Saturday through third Sunday of October (10 Days).
Location	Lake Havasu City, AZ.
Regulated Area	The navigable waters of Lake Havasu, AZ in the area known as Crazy Horse Campgrounds.
8. Parker Enduro	
Sponsor	Parker Area Chamber of Commerce.
Event Description	Hydroplane, flatbottom, tunnel, and v-bottom powerboat race.
Date	Late October.
Location	Parker, AZ.
Regulated Area	Between river miles 179 and 185 (between the Roadrunner Resort and Headgate Dam).
9. Bluewater Resort and Casino Thanksgiving Regatta	
Sponsor	Southern California Speedboat Club.
Event Description	Boat Races.
Date	Thursday, Friday, Saturday, and Sunday during Thanksgiving week.
Location	Parker, AZ.
Regulated Area	That portion of Lake Moovalya, Parker, AZ between the northern and southern boundaries of La Paz County Park.
10. Lake Havasu City Boat Parade of Lights	
Sponsor	London Bridge Yacht Club.
Event Description	Boat parade during which vessels pass by a pre-designated vessel and then transit through the London Bridge Channel.
Date	First Saturday and Sunday in December.
Location	Lake Havasu, AZ.
Regulated Area	The limits of this temporary safety zone consists of the navigable waters of North Lake Havasu, London Bridge Channel and Thompson Bay.

■ 4. Revise § 100.1103 to read as follows:

§ 100.1103 Northern California and Lake Tahoe area annual marine events.

(a) *General.* Special local regulations are established for the events listed in Table 1 of this section. Notice of implementation of these special local regulations will be made by publication in the **Federal Register** 30 days prior to the event for those events without specific dates or by Notice to Mariners 20 Days prior to the event for those events listing a period for which a firm date is identifiable. In all cases, further information on exact dates, times, and other details concerning the number and type of participants and an exact geographical description of the areas are published by the Eleventh Coast Guard District in the Local Notice to Mariners at least 20 days prior to each event. To be placed on the mailing list for Local Notice to Mariners contact: Commander (dpw), Eleventh Coast Guard District, Coast Guard Island, Building 50–2, Alameda, CA 94501–5100. *Note:* Sponsors of events listed in Table 1 of this section must submit an application each year as required by 33 CFR part 100, subpart A, to the cognizant Coast Guard Sector Commander. Sponsors are informed that ample lead time is required to inform all Federal, state, local agencies, and/or other interested parties and to provide the sponsor the best support to ensure the safety of life and property.

(b) *Special local regulations.* All persons and vessels not registered with the sponsor as participants or as official patrol vessels are considered spectators. The ''official patrol'' consists of any Coast Guard; other Federal, state, or local law enforcement; and any public or sponsor-provided vessels assigned or approved by the cognizant Coast Guard Sector Commander to patrol each event.

(1) No spectator shall anchor, block, loiter, nor impede the through transit of participants or official patrol vessels in the regulated areas during all applicable effective dates and times unless cleared to do so by or through an official patrol vessel.

(2) When hailed and/or signaled by an official patrol vessel, any spectator located within a regulated area during

all applicable effective dates and times shall come to an immediate stop.

(3) The Patrol Commander (PATCOM) is empowered to forbid and control the movement of all vessels in the regulated area. The Patrol Commander shall be designated by the cognizant Coast Guard Sector Commander; will be a U.S. Coast Guard commissioned officer, warrant officer, or petty officer to act as the Sector Commander's official representative; and will be located aboard the lead official patrol vessel. As the Sector Commander's representative, the PATCOM may terminate the event any time it is deemed necessary for the protection of life and property. PATCOM may be reached on VHF–FM Channel 13 (156.65MHz) or 16 (156.8MHz) when required, by the call sign ''PATCOM''.

(4) The Patrol Commander may, upon request, allow the transit of commercial vessels through regulated areas when it is safe to do so.

(5) The Coast Guard may be assisted by other Federal, state, or local agencies.

TABLE 1 TO § 100.1103

[All coordinates referenced use datum NAD 83]

1. Redwood Heron Sprints Regatta	
Sponsor	Humboldt State University Athletic Department.
Event Description	Sport rowing shells.
Date	Third Sunday in April.
Location	Eureka Inner Reach Channel.
Regulated Area	The navigable waters within an area bounded by a line starting 40°48′16″ N, 124°10′28″ W; thence to 40°48′21″ N, 124°10′28″ W; thence to 40°48′35″ N, 124°09′17″ W; thence to 40°48′30″ N, 124°09′17″ W; thence returning to the point of origin.
2. Stockton Asparagus Festival	
Sponsor	City of Stockton.
Event Description	Pier side Event.
Date	Last Friday, Saturday and Sunday in April.
Location	McLeod Lake, Stockton, CA.
Regulated Area	Starting at the Port of Stockton and extending east to McLeod Lake; beginning at latitude 37°57′06″ N and longitude 121°19′35″ W; then northerly to latitude 37°57′10″ N and longitude 121°19′36″ W; then north-northeasterly to latitude 37°57′24″ N and longitude 121°17′35″ W; then south-southwesterly to latitude 37°57′15″ N and longitude 121°17′41″ W; then south-southeasterly to latitude 37°57′14″ N and longitude 121°17′31″ W; and then back to the beginning point.
3. Blessing of the Fleet	
Sponsor	Corinthian Yacht Club.
Event Description	Boat parade during which vessels pass by a pre-designated platform or vessel.
Date	Last Sunday in April.
Location	San Francisco Waterfront to South Tower of Golden Gate Bridge.
Regulated Area	The area between a line drawn from Bluff Point on the southeastern side of Tiburon Peninsula to Point Campbell on the northern edge of Angel Island, and a line drawn from Peninsula Point to the southern edge of Tiburon Peninsula to Point Stuart on the western edge of Angel Island.
4. Opening Day on San Francisco Bay	
Sponsor	Pacific Inter-Club Yacht Association and Corinthian Yacht Club.
Event Description	Boat parade during which vessels pass by a pre-designated platform or vessel.
Date	Last Sunday in April.
Location	San Francisco, CA waterfront: Crissy Field to Pier 39.
Regulated Area	The area defined by a line drawn from Fort Point; thence easterly approximately 5,000 yards; thence easterly to the Blossom Rock Bell Buoy; thence westerly to the Northeast corner of Pier 39; thence returning along the shoreline to the point of origin. Special Requirements: All vessels entering the regulated area shall follow the parade route established by the sponsor and be capable of maintaining an approximate speed of 6 knots. Commercial Vessel Traffic Allowances: The parade will be interrupted, as necessary, to permit the passage of commercial vessel traffic. Commercial traffic must cross the parade route at a no-wake speed and perpendicular to the parade route.
5. Kinetic Sculpture Race	
Sponsor	Kinetic Sculpture Race Inc.
Event Description	Human Powered Craft Race.
Date	Saturday and Sunday of Memorial Day Weekend.
Location	Eureka Inner Reach Channel.
Regulated Area	The navigable waters within an area bounded by a line starting 40°48′16″ N, 124°10′28″ W; thence to 40°48′21″ N, 124°10′28″ W; thence to 40°48′35″ N, 124°09′17″ W; thence to 40°48′30″ N, 124°09′17″ W; thence returning to the point of origin.
6. Sacramento Bridge-to-Bridge Water Festival	
Sponsor	Sacramento Visitors Bureau.

TABLE 1 TO § 100.1103—Continued

[All coordinates referenced use datum NAD 83]

Event Description	Professional high-speed powerboat races.
Date	Second to last Friday, Saturday and Sunday in July.
Location	Sacramento, CA.
Regulated Area	The navigable waters within an area bounded by a line starting 38°35′49″ N, 121°30′30″ W; thence to 38°35′49″ N, 121°30′23″ W thence to 38°40′00″ N, 121°30′59″ W thence to 38°33′46″ N, 121°31′11″ W thence returning to the point of origin.
7. Humboldt Bay Paddle Fest	
Sponsor	Humboldt State University Alumni Association.
Event Description	Paddle boat race.
Date	Last weekend in September or first weekend in October.
Location	Eureka Inner Reach Channel.
Regulated Area	The navigable waters within an area bounded by a line starting 40°48′16″ N, 124°10′28″ W; thence to 40°48′21″ N, 124°10′28″ W; thence to 40°48′35″ N, 124°09′17″ W; thence to 40°48′30″ N, 124°09′17″ W; thence returning to the point of origin.
8. Delta Thunder Powerboat Race	
Sponsor	Pacific Offshore Power Racing Association.
Event Description	Professional high-speed powerboat race.
Date	Second Saturday, Sunday in September.
Location	Off Pittsburgh, CA in the waters around Winter Island and Brown Island.
Regulated Area	The water area of Suisun Bay commencing at Simmons Point on Chipps Island; thence south-westerly to Stake Point on the southern shore of Suisun Bay; thence easterly following the southern shoreline of Suisun Bay and New York Slough to New York Slough Buoy 13; thence north-northwesterly to the Northwestern corner of Fraser Shoal; thence northwesterly to the western tip of Chain Island; thence west-northwesterly to the northeast tip of Van Sickle Island; thence following the shoreline of Van Sickle Island and Chipps Island and re-turning to the point of origin.
9. Pittsburg Seafood Festival Air Show	
Sponsor	City of Pittsburg, CA.
Event Description	Pittsburg Seafood Festival Air Show.
Date	Second Saturday, Sunday in September.
Location	Off Pittsburgh, CA in the waters around Winter Island and Brown Island.
Regulated Area	The water area of Suisun Bay commencing at Simmons Point on Chipps Island; thence south-westerly to Stake Point on the southern shore of Suisun Bay; thence easterly following the southern shoreline of Suisun Bay and New York Slough to New York Slough Buoy 13; thence north-northwesterly to the Northwestern corner of Fraser Shoal; thence northwesterly to the western tip of Chain Island; thence west-northwesterly to the northeast tip of Van Sickle Island; thence following the shoreline of Van Sickle Island and Chipps Island and re-turning to the point of origin.

■ 5. Add § 100.1104 to read as follows:

§ 100.1104 Southern California annual marine events for the Los Angeles Long Beach Captain of the Port Zone.

(a) *General.* Special local regulations are established for the events listed in Table 1 of this section. Notice of implementation of these special local regulations will be made by publication in the **Federal Register** 30 days prior to the event for those events without specific dates or by Notice to Mariners 20 days prior to the event for those events listing a period for which a firm date is identifiable. In all cases, further information on exact dates, times, and other details concerning the number and type of participants and an exact geographical description of the areas are published by the Eleventh Coast Guard District in the Local Notice to Mariners at least 20 days prior to each event. To be placed on the mailing list for Local Notice to Mariners contact: Commander (dpw), Eleventh Coast Guard District, Coast Guard Island, Building 50–2, Alameda, CA 94501–5100. Note: Sponsors of events listed in Table 1 of this section must submit an application each year as required by 33 CFR part 100, subpart A, to the cognizant Coast Guard Sector Commander. Sponsors are informed that ample lead time is required to inform all Federal, state, local agencies, and/or other interested parties and to provide the sponsor the best support to ensure the safety of life and property.

(b) *Special local regulations.* All persons and vessels not registered with the sponsor as participants or as official patrol vessels are considered spectators. The ''official patrol'' consists of any Coast Guard; other Federal, state, or local law enforcement; and any public or sponsor-provided vessels assigned or approved by the cognizant Coast Guard Sector Commander to patrol each event.

(1) No spectator shall anchor, block, loiter, nor impede the through transit of participants or official patrol vessels in the regulated areas during all applicable effective dates and times unless cleared to do so by or through an official patrol vessel.

(2) When hailed and/or signaled by an official patrol vessel, any spectator located within a regulated area during all applicable effective dates and times shall come to an immediate stop.

(3) The Patrol Commander (PATCOM) is empowered to forbid and control the movement of all vessels in the regulated area. The Patrol Commander shall be designated by the cognizant Coast Guard Sector Commander; will be a U.S. Coast Guard commissioned officer, warrant officer, or petty officer to act as the Sector Commander's official representative; and will be located

aboard the lead official patrol vessel. As the Sector Commander's representative, the PATCOM may terminate the event any time it is deemed necessary for the protection of life and property. PATCOM may be reached on VHF–FM Channel 13 (156.65MHz) or 16 (156.8MHz) when required, by the call sign ''PATCOM.''

(4) The Patrol Commander may, upon request, allow the transit of commercial vessels through regulated areas when it is safe to do so.

(5) The Coast Guard may be assisted by other Federal, state, or local agencies.

TABLE 1 TO § 100.1104

[All coordinates referenced use datum NAD 83]

1. Newport to Ensenada Yacht Race	
Sponsor	Newport Ocean Sailing Association.
Event Description	Sailing vessel race; open ocean.
Date	Fourth Friday in April.
Location	Newport Beach, CA.
Regulated Area	Starting area only. All waters of the Pacific Ocean near Newport Beach, CA bounded by a line starting 33°35′18″ N, 117°53′18″ W thence to 33°34′54″ N, 117°53′18″ W thence to 33°34′54″ N, 117°54′30″ W thence to 33°35′18″ N, 117°54′30″ W thence returning to the point of origin.

Dated: July 19, 2011.

J.R. Castillo,

Rear Admiral, U.S. Coast Guard, Commander, Eleventh Coast Guard District.

[FR Doc. 2011–21865 Filed 8–25–11; 8:45 am]

BILLING CODE 9110–04–P

DEPARTMENT OF HOMELAND SECURITY

Coast Guard

33 CFR Parts 100 and 165

[Docket No. USCG–2011–0553]

RIN 1625–AA08; 1625–AA00

Special Local Regulation and Safety Zones; Marine Events in Captain of the Port Long Island Sound Zone

AGENCY: Coast Guard, DHS.

ACTION: Temporary final rule.

SUMMARY: The Coast Guard is establishing temporary special local regulations and safety zones for marine events within the Captain of the Port (COTP) Long Island Sound Zone for regattas, fireworks displays and swim events. This action is necessary to provide for the safety of life on navigable waters during the events. Entry into, transit through, mooring or anchoring within this zone is prohibited unless authorized by the COTP Sector Long Island Sound.

DATES: This rule is effective in the CFR on August 26, 2011 through 10:30 p.m. on October 1, 2011. This rule is effective with actual notice for purposes of enforcement beginning at 8 a.m. on July 30, 2011.

ADDRESSES: Documents indicated in this preamble as being available in the docket are part of docket USCG–2011–0553 and are available online by going to *http://www.regulations.gov,* inserting USCG–2011–0553 in the ''Keyword'' box, and then clicking ''Search.'' They are also available for inspection or copying at the Docket Management Facility (M–30), U.S. Department of Transportation, West Building Ground Floor, Room W12–140, 1200 New Jersey Avenue, SE., Washington, DC 20590, between 9 a.m. and 5 p.m., Monday through Friday, except Federal holidays.

FOR FURTHER INFORMATION CONTACT: If you have questions on this temporary rule, call or e-mail Petty Officer Joseph Graun, Prevention Department, Coast Guard Sector Long Island Sound, (203) 468–4544, *Joseph.L.Graun@uscg.mil.* If you have questions on viewing the docket, call Renee V. Wright, Program Manager, Docket Operations, telephone 202–366–9826.

SUPPLEMENTARY INFORMATION:

Regulatory Information

The Coast Guard is issuing this temporary final rule without prior notice and opportunity to comment pursuant to authority under section 4(a) of the Administrative Procedure Act (APA) (5 U.S.C. 553(b)). This provision authorizes an agency to issue a rule without prior notice and opportunity to comment when the agency for good cause finds that those procedures are ''impracticable, unnecessary, or contrary to the public interest.'' Under 5 U.S.C. 553(b)(B), the Coast Guard finds that good cause exists for not publishing a notice of proposed rulemaking (NPRM) with respect to this rule because any delay encountered in this regulation's effective date by publishing an NPRM would be contrary to public interest since immediate action is needed to protect both spectators and participants from the potential safety hazards associated with these events. We spoke to the event sponsors, and they are unable and unwilling to move their event dates for the following reasons.

Sponsors for Waves of Hope Swim, Stonewall Swim, Hartford Dragon Boat Races and Kayak for a Cause have hundreds of participants registered for their events. Changing the dates for these events would cause numerous cancellations. These events have taken place at the same time and location for the last several years without issue. The sponsors submitted recurring marine event permit applications with the required 60 day notice. This year the Coast Guard is establishing special local regulations and safety zones to mitigate an increased safety risk analysis score, according to permit applications the expected number of participants has increased significantly. This was not discovered until the permit applications were submitted leaving the Coast Guard with insufficient time to solicit for public comment. For future recurring events, the sponsor will be required to provide 135 days notice to ensure sufficient time to solicit for public comments.

The sponsors for Doug Chappy Fireworks, Darin's 30th Birthday Fireworks, Shelter Island Fireworks and Spincola Wedding Fireworks stated their events are held in conjunction with birth dates, anniversaries and weddings and cannot be moved. The sponsors were not aware of the requirements for submitting a marine event application 135 days in advance resulting in a late notification to the Coast Guard. The sponsors are now aware of the reporting requirements.

The sponsor for Ascension Fireworks (also known as Fund in the Sun) submitted a marine event application with sufficient notice to the Coast Guard. This fireworks display is a

recurring marine event with a corresponding entry in a proposed permanent rule for which the NPRM just closed its public comment period (docket number USCG–2008–0384); No public comments were received. The Coast Guard is establishing this temporary safety zones to provide for safety of life during this year's event.

For the same reasons, under 5 U.S.C. 553(d)(3), the Coast Guard finds that good cause exists for making this rule effective less than 30 days after publication in the **Federal Register.** Delaying the effective date by first publishing a NPRM would be contrary to the rule's objectives of ensuring safety of life on the navigable waters during these scheduled events as immediate action is needed to protect both spectators and participants from the potential safety hazards associated with these events including powerboats traveling at high speeds, unexpected pyrotechnics detonation and burning debris.

Basis and Purpose

The legal basis for this temporary rule is 33 U.S.C. 1226, 1231, 1233; 46 U.S.C. chapter 701, 3306, 3703; 46 U.S.C. 454, 50 U.S.C. 191, 195; Public Law 107–295, 116 Stat. 2064; and Department of Homeland Security Delegation No. 0170.1, which collectively authorize the Coast Guard to define regulatory special local regulations and safety zones.

This temporary rule carries out two related actions: (1) Establishing special local regulations for regattas, and (2) establishing safety zones for fireworks and swim events. Marine events are frequently held on the navigable waters within the COTP Long Island Sound Zone. Based on accidents that have occurred in the past and the explosive hazards of fireworks, the COTP Long Island has determined that regattas, fireworks displays and swim events proximate to watercrafts pose significant risk to public safety and property.

In order to protect the safety of all waterway users including event participants and spectators, this temporary rule establishes temporary special local regulations and safety zones for the time and location of each event.

This rule prevents vessels from entering, transiting, mooring or anchoring within areas specifically designated as regulated areas during the periods of enforcement unless authorized by the COTP, or designated representative.

Discussion of Rule

This temporary rule establishes special local regulations for two regattas, and safety zones for two swimming events and five fireworks displays in the COTP Long Island Sound Zone. These events are listed below in the text of the regulation in table format.

Because large numbers of spectator vessels are expected to congregate around the location of these events, these regulated areas are needed to protect both spectators and participants from the safety hazards created by them including large numbers of swimmers, unexpected pyrotechnics detonation, and burning debris. During the enforcement periods, persons and vessels are prohibited from entering, transiting through, remaining, anchoring or mooring within the regulated areas unless stipulated otherwise or specifically authorized by the COTP or the designated representative. The Coast Guard may be assisted by other Federal, state and local agencies in the enforcement of these regulated areas.

The Coast Guard determined that these regulated areas will not have a significant impact on vessel traffic due to their temporary nature, limited size, and the fact that vessels are allowed to transit the navigable waters outside of the regulated areas. Advanced public notifications will also be made to the local maritime community by the Local Notice to Mariners as well as Broadcast Notice to Mariners.

Regulatory Analyses

We developed this rule after considering numerous statutes and executive orders related to rulemaking. Below we summarize our analyses based on 13 of these statutes or executive orders.

Regulatory Planning and Review

This rule is not a significant regulatory action under section 3(f) of Executive Order 12866, Regulatory Planning and Review, as supplemented by Executive Order 13563, and does not require an assessment of potential costs and benefits under section 6(a)(3) of that Order. The Office of Management and Budget has not reviewed it under those Orders.

The Coast Guard determined that this rule is not a significant regulatory action for the following reasons: The regulated areas will be of limited duration and cover only a small portion of the navigable waterways. Furthermore, vessels may transit the navigable waterways outside of the regulated areas. Vessels requiring entry into the regulated areas may be authorized to do so by the COTP or the designated representative.

Advanced public notifications will also be made to the local maritime community by the Local Notice to Mariners as well as Broadcast Notice to Mariners.

Small Entities

Under the Regulatory Flexibility Act (5 U.S.C. 601–612), we have considered whether this rule would have a significant economic impact on a substantial number of small entities. The term ''small entities'' comprises small businesses, not-for-profit organizations that are independently owned and operated and are not dominant in their fields, and governmental jurisdictions with populations of less than 50,000.

The Coast Guard certifies under 5 U.S.C. 605(b) that this rule will not have a significant economic impact on a substantial number of small entities. This rule will affect the following entities, some of which may be small entities: The owners or operators of vessels intending to transit or anchor in the designated regulated areas during the enforcement periods stated for each event listed below in the List of Subjects.

The temporary special local regulations and safety zones will not have a significant economic impact on a substantial number of small entities for the following reasons: The regulated areas will be of limited size and of short duration, and vessels that can safely do so may navigate in all other portions of the waterways except for the areas designated as regulated areas. Additionally, before the effective period, notifications will be made to the local maritime community through the Local Notice to Mariners and Broadcast Notice to Mariners well in advance of the events.

Assistance for Small Entities

Under section 213(a) of the Small Business Regulatory Enforcement Fairness Act of 1996 (Pub. L. 104–121), we offer to assist small entities in understanding the rule so that they can better evaluate its effects on them and participate in the rulemaking process.

Small businesses may send comments on the actions of Federal employees who enforce, or otherwise determine compliance with, Federal regulations to the Small Business and Agriculture Regulatory Enforcement Ombudsman and the Regional Small Business Regulatory Fairness Boards. The Ombudsman evaluates these actions annually and rates each agency's responsiveness to small business. If you wish to comment on actions by employees of the Coast Guard, call

1–888–REG–FAIR (1–888–734–3247). The Coast Guard will not retaliate against small entities that question or complain about this rule or any policy or action of the Coast Guard.

Collection of Information

This rule calls for no new collection of information under the Paperwork Reduction Act of 1995 (44 U.S.C. 3501–3520).

Federalism

A rule has implications for federalism under Executive Order 13132, Federalism, if it has a substantial direct effect on State or local governments and would either preempt State law or impose a substantial direct cost of compliance on them. We have analyzed this rule under that Order and have determined that it does not have implications for federalism.

Unfunded Mandates Reform Act

The Unfunded Mandates Reform Act of 1995 (2 U.S.C. 1531–1538) requires Federal agencies to assess the effects of their discretionary regulatory actions. In particular, the Act addresses actions that may result in the expenditure by a State, local, or Tribal government, in the aggregate, or by the private sector of $100,000,000 (adjusted for inflation) or more in any one year. Though this rule will not result in such an expenditure, we do discuss the effects of this rule elsewhere in this preamble.

Taking of Private Property

This rule will not cause a taking of private property or otherwise have taking implications under Executive Order 12630, Governmental Actions and Interference with Constitutionally Protected Property Rights.

Civil Justice Reform

This rule meets applicable standards in sections 3(a) and 3(b)(2) of Executive Order 12988, Civil Justice Reform, to minimize litigation, eliminate ambiguity, and reduce burden.

Protection of Children

We have analyzed this rule under Executive Order 13045, Protection of Children from Environmental Health Risks and Safety Risks. This rule is not an economically significant rule and does not create an environmental risk to health or risk to safety that may disproportionately affect children.

Indian Tribal Governments

This rule does not have Tribal implications under Executive Order 13175, Consultation and Coordination with Indian Tribal Governments, because it does not have a substantial direct effect on one or more Indian Tribes, on the relationship between the Federal Government and Indian Tribes, or on the distribution of power and responsibilities between the Federal Government and Indian Tribes.

Energy Effects

We have analyzed this rule under Executive Order 13211, Actions Concerning Regulations That Significantly Affect Energy Supply, Distribution, or Use. We have determined that it is not a ''significant energy action'' under that order because it is not a ''significant regulatory action'' under Executive Order 12866 and is not likely to have a significant adverse effect on the supply, distribution, or use of energy. The Administrator of the Office of Information and Regulatory Affairs has not designated it as a significant energy action. Therefore, it does not require a Statement of Energy Effects under Executive Order 13211.

Technical Standards

The National Technology Transfer and Advancement Act (NTTAA) (15 U.S.C. 272 note) directs agencies to use voluntary consensus standards in their regulatory activities unless the agency provides Congress, through the Office of Management and Budget, with an explanation of why using these standards would be inconsistent with applicable law or otherwise impractical. Voluntary consensus standards are technical standards (*e.g.,* specifications of materials, performance, design, or operation; test methods; sampling procedures; and related management systems practices) that are developed or adopted by voluntary consensus standards bodies.

This rule does not use technical standards. Therefore, we did not consider the use of voluntary consensus standards.

Environment

We have analyzed this rule under Department of Homeland Security Management Directive 023–01 and Commandant Instruction M16475.lD, which guide the Coast Guard in complying with the National Environmental Policy Act of 1969 (NEPA) (42 U.S.C. 4321–4370f), and have concluded this action is one of a category of actions which do not individually or cumulatively have a significant effect on the human environment. This rule is categorically excluded, under figure 2–1, paragraph (34)(g) & (h), of the Instruction. This rule involves the establishment of special local regulations and safety zones. An environmental analysis checklist and a categorical exclusion determination are available in the docket where indicated under **ADDRESSES**.

List of Subjects

33 CFR Part 100

Marine safety, Navigation (water), Reporting and recordkeeping requirements, Waterways.

33 CFR Part 165

Harbors, Marine safety, Navigation (water), Reporting and recordkeeping requirements, Security measures, and Waterways.

For the reasons discussed in the preamble, the Coast Guard amends 33 CFR parts 100 and 165 as follows:

PART 100—SAFETY OF LIFE ON NAVIGABLE WATERS

■ 1. The authority citation for part 100 continues to read as follows:

Authority: 33 U.S.C. 1233.

■ 2. Add Sec. 100.T01–0553 to read as follows:

§ 100.T01–0553 Special Local Regulations; Regattas in the Coast Guard Sector Long Island Sound Captain of the Port Zone.

(a) Regulations.

The following regulations apply to the marine events listed in TABLE 1 to § 100.T01–0553. These regulations will be enforced for the duration of each event, on the dates indicated.

(b) Definitions. The following definitions apply to this section:

(1) Designated Representative. A ''designated representative'' is any Coast Guard commissioned, warrant or petty officer of the U.S. Coast Guard who has been designated by the Captain of the Port, Sector Long Island Sound (COTP), to act on his or her behalf. The designated representative may be on an official patrol vessel or may be on shore and will communicate with vessels via VHF–FM radio or loudhailer. In addition, members of the Coast Guard Auxiliary may be present to inform vessel operators of this regulation.

(2) Official Patrol Vessels. Official patrol vessels may consist of any Coast Guard, Coast Guard Auxiliary, state, or local law enforcement vessels assigned or approved by the COTP.

(3) Spectators. All persons and vessels not registered with the event sponsor as participants or official patrol vessels.

(c) Vessel operators desiring to enter or operate within the regulated areas shall contact the COTP or the designated representative via VHF channel 16 or by telephone at (203) 468–4404 to obtain permission to do so.

(d) Spectators shall not anchor, block, loiter, or impede the transit of event participants or official patrol vessels in the regulated areas during the effective dates and times, or dates and times as modified through the Local Notice to Mariners, unless authorized by COTP or designated representative.

(e) The COTP or designated representative may control the movement of all vessels in the regulated area. When hailed or signaled by an official patrol vessel, a vessel shall come to an immediate stop and comply with the lawful directions issued. Failure to comply with a lawful direction may result in expulsion from the area, citation for failure to comply, or both.

(f) The COTP or designated representative may delay or terminate any marine event in this subpart at any time it is deemed necessary to ensure the safety of life or property.

(g) Spectators are prohibited from entering or moving within the regulated area unless stipulated otherwise or authorized by the COTP or a designated representative. Vessels within the regulated area must be at anchor within a designated spectator area or moored to a waterfront facility in a way that will not interfere with the progress of the event.

TABLE 1 TO § 100.T01–0553

1. Hartford Dragon Boat Races	• Event type: Regatta. • Date & time: August 20, 2011, 9 a.m. until 6 p.m. and August 21, 2011, 10 a.m. until 5 p.m. • Locations: All waters of the Connecticut River, Hartford, CT between the Bulkeley Bridge 41°46′10.096″ N, 072°39′56.128″ W and the Wilbur Cross Bridge 41°45′11.668″ N, 072°39′13.644″ W all positions are approximate (NAD 83).
2. Kayak for a Cause Regatta	• Event type: Regatta. • Date & time: July 30, 2011 8 a.m. until 3 p.m. • Locations: All water of Long Island Sound between Crab Meadow Beach in Huntington, NY 40°55′45.904″ N, 073°19′34.234″ W and Shady Beach in Norwich, CT. Shelter Island, NY 41°05′05.474″ N, 073°23′33.914″ W all positions are approximate (NAD 83). • Additional stipulations: (1) Spectators must maintain a minimum distance of 100 yards from each event participant. (2) Spectators who maintain the minimum required distance from event participants may transit through the regulated area.

PART 165—REGULATED NAVIGATION AREAS AND LIMITED ACCESS AREAS

■ 3. The authority citation for Part 165 continues to read as follows:

Authority: 33 U.S.C. 1226, 1231; 46 U.S.C. Chapters 701; 50 U.S.C. 191, 195; 33 CFR 1.05–1(g), 6.04–1, 6.04–6 and 160.5; Pub. L. 107–295, 116 Stat. 2064; Department of Homeland Security Delegation No. 0170.1.

■ 4. Add § 165.T01–0553 to read as follows:

§ 165.T01–0553 Safety Zones; Fireworks Displays and Swim Events in Captain of the Port Long Island Sound Zone.

(a) Regulations.

The general regulations contained in 33 CFR 165.23 as well as the following regulations apply to the events listed in TABLE 1 of § 165.T01–0553 and TABLE 2 of § 165.T01–0553.

These regulations will be enforced for the duration of each event.

(b) Definitions. The following definitions apply to this section:

(1) Designated Representative. A ''designated representative'' is any Coast Guard commissioned, warrant or petty officer of the U.S. Coast Guard who has been designated by the Captain of the Port, Sector Long Island Sound (COTP), to act on his or her behalf. The designated representative may be on an official patrol vessel or may be on shore and will communicate with vessels via VHF–FM radio or loudhailer. In addition, members of the Coast Guard Auxiliary may be present to inform vessel operators of this regulation.

(2) Official Patrol Vessels. Official patrol vessels may consist of any Coast Guard, Coast Guard Auxiliary, state, or local law enforcement vessels assigned or approved by the COTP.

(3) Spectators. All persons and vessels not registered with the event sponsor as participants or official patrol vessels.

(c) Vessel operators desiring to enter or operate within the regulated areas should contact the COTP or the designated representative via VHF channel 16 or by telephone at (203) 468–4404 to obtain permission to do so.

(d) Spectators shall not anchor, block, loiter, or impede the transit of event participants or official patrol vessels in the regulated areas during the effective dates and times, or dates and times as modified through the Local Notice to Mariners, unless authorized by COTP or designated representative.

(e) The COTP or designated representative may delay or terminate any marine event in this subpart at any time it is deemed necessary to ensure the safety of life or property.

(f) The regulated area for all fireworks displays listed in TABLE 1 of § 165.T01–0553 is that area of navigable waters within a 1000 foot radius of the launch platform or launch site for each fireworks display. Fireworks barges used in these locations will also have a sign on their port and starboard side labeled ''FIREWORKS—STAY AWAY.'' This sign will consist of 10 inch high by 1.5 inch wide red lettering on a white background. Shore sites used in these locations will display a sign labeled ''FIREWORKS—STAY AWAY'' with the same dimensions.

(g) The regulated areas for all swim events listed in Table 2 of § 165.T01–0553 are all navigable waters within a 100-yard radius of swim participants and support vessels within the location area.

TABLE 1 OF § 165.T01–0553

Fireworks Events	
1. Doug Chapey Birthday Fireworks	• Date: July 30, 2011. • Time: 8:30 p.m. to 10:30 p.m. • Location: All waters of Babylon, NY in approximate position 40°40′38.94″ N, 073°19′22.85″ W (NAD 83).
2. Shelter Island Yacht Club Fireworks	• Date: August 14, 2011. • Rain date: August 15, 2011. • Time: 8:30 p.m. to 10:30 p.m. • Location: All water of Dering Harbor off Shelter Island, NY in approximate position 41°05′23.47″ N, 072°21′11.18″ W (NAD 83).
3. Spincola Wedding Fireworks	• Date: October 1, 2011. • Time: 8:30 p.m. to 10:30 p.m. • Location: All water of Long Island Sound off Bayville, NY in approximate position 40°55′03″ N, 073°32′35″ W (NAD 83).
4. Ascension Fireworks	• Date: August 20, 2011. • Rain date: August 21, 2011. • Time: 8:30 p.m. to 10:30 p.m. • Location: All waters of the Great South Bay off The Pines, NY in approximate position 40°40′07.47″ N, 073°04′31.73″ W (NAD 83).
5. Darin's 30th Birthday Fireworks	• Date: August 27, 2011. • Rain date: August 28, 2011. • Time: 8:30 p.m. to 10:30 p.m. • Location: All waters of Sag Harbor Cove off Sag Harbor, NY in approximate position 40°0′14.46″ N, 072°18′19.38″ W (NAD 83).

TABLE 2 OF § 165.T01–0553

Swimming Events	
1. Waves of Hope Swim	• Date: August 15, 2011. • Time: 10 a.m. to 12:01 p.m. • Location: All water of the Great South Bay off Amityville, NY The swim course is a one mile long course parallel to the shore marked by six buoys beginning at Narrasketuck Yacht Club 40°39′31.39″ N, 073°25′26.62″ W, buoy #1, 40°39′26.61″ N, 073°25′26.08″ W, buoy #2, 40°39′19.93″ N, 073°25′19.58″ W, buoy #3, 40°39′13.67″ N, 073°25′05.10″ W, buoy #4, 40°39′13.44″ N, 073°24′26.07″ W, buoy #5, 40°39′13.16″ N, 073°23′57.67″ W, buoy #6, 40°39′25.24″ N, 073°24′16.31″ W, ending at Amityville Village Beach 40°39′19.71″ N, 073°24′24.72″ W (NAD 83) all positions are approximate.
2. Stonewall Swim	• Date: August 13, 2011. • Time: 9 a.m. to 12:01 p.m. • Location: All waters of the Great South Bay, between Snedecor Avenue, Bayport, NY 40°43′40.004″ N, 073°03′29.098″ W, and Porgie Walk, Fire Island, NY 40°40′6.268″ N, 073°03′30.88″ W, (NAD 83) all positions are approximate.

Dated: July 29, 2011.

J.M. Vojvodich,

Captain, U.S. Coast Guard, Captain of the Port Sector Long Island Sound.

[FR Doc. 2011–21864 Filed 8–25–11; 8:45 am]

BILLING CODE 9110–04–P

DEPARTMENT OF HOMELAND SECURITY

Coast Guard

33 CFR Part 117

[Docket No. USCG–2011–0781]

Drawbridge Operation Regulation; Trent River, New Bern, NC

AGENCY: Coast Guard, DHS.

ACTION: Notice of temporary deviation from regulations.

SUMMARY: The Commander, Fifth Coast Guard District, has issued a temporary deviation from the regulations governing the operation of the US 70 (Alfred C. Cunningham) Bridge across Trent River, mile 0.0, at New Bern, NC, to accommodate a bike race. This deviation allows the drawbridge to be maintained in the closed position to vessels at specific dates and times.

DATES: This deviation is effective from 8 a.m. on September 10, 2011 to 9 a.m. on September 11, 2011.

ADDRESSES: Documents mentioned in this preamble as being available in the docket are part of docket USCG–2011–

0781 and are available online by going to *http://www.regulations.gov,* inserting USCG–2011–0781 in the ''Keyword'' box and then clicking ''Search''. They are also available for inspection or copying at the Docket Management Facility (M–30), U.S. Department of Transportation, West Building Ground Floor, Room W12–140, 1200 New Jersey Avenue, SE., Washington, DC 20590, between 9 a.m. and 5 p.m., Monday through Friday, except Federal holidays.

FOR FURTHER INFORMATION CONTACT: If you have questions on this rule, call or e-mail Terrance Knowles, Environmental Protection Specialist, Fifth Coast Guard District; telephone 757–398–6587, e-mail *Terrance.A.Knowles@uscg.mil.* If you have questions on viewing the docket, call Renee V. Wright, Program Manager, Docket Operations, telephone 202–366–9826.

SUPPLEMENTARY INFORMATION: The US 70 (Alfred C. Cunningham) Bridge, a bascule lift bridge across Trent River, at mile 0.0, has a vertical clearance in the closed position to vessels of approximately 14 feet, above mean high water.

On behalf of the City of New Bern NC, the National Multiple Sclerosis (MS) Society has requested a temporary deviation from the current operating regulations of the bridge set out in 33 CFR 117.843 (a) to accommodate the Bike MS/Historic New Bern Ride.

Under this deviation, the drawbridge would be allowed to remain in the closed position to vessels on two separate occasions on the following dates and times: For the Bike MS/Historic New Bern Ride, from 8 a.m. to 9 a.m., on Saturday, September 10, 2011 and from 8 a.m. to 9 a.m., on Sunday, September 11, 2011. There are no alternate routes for vessels transiting this section of the Trent River and the drawbridge will be able to open in the event of an emergency.

The majority of the vessels that transit through this bridge during this time of year are primarily recreational boats. The Coast Guard will inform the users of the waterway through our Local and Broadcast Notices to Mariners of the closure periods for the bridge so that vessels can arrange their transits to minimize any impact caused by the temporary deviations.

In accordance with 33 CFR 117.35(e), the drawbridge must return to its regular operating schedule immediately at the end of the designated time periods. This deviation from the operating regulation is authorized under 33 CFR 117.35.

Dated: August 12, 2011.

Waverly W. Gregory, Jr.,

Bridge Program Manager.

By direction of the Commander, Fifth Coast Guard District.

[FR Doc. 2011–21867 Filed 8–25–11; 8:45 am]

BILLING CODE 9110–04–P

DEPARTMENT OF HOMELAND SECURITY

Coast Guard

33 CFR Part 117

[Docket No. USCG–2011–0798]

Drawbridge Operation Regulations; Cape Fear River, Wilmington, NC

AGENCY: Coast Guard, DHS.

ACTION: Notice of temporary deviation from regulations.

SUMMARY: The Commander, Fifth Coast Guard District, has issued a temporary deviation from the regulations governing the operation of the Cape Fear Memorial Bridge, at mile 26.8, over Cape Fear River, at Wilmington, NC. The deviation restricts the operation of the draw span to facilitate the cleaning and painting of the structure.

DATES: This deviation is effective at 6 a.m. on August 12, 2011 thru August 26, 2011 with actual notice and from 12 a.m. on August 26, 2011 thru 11:59 p.m. December 1, 2011 with constructive notice.

ADDRESSES: Documents mentioned in this preamble as being available in the docket USCG–2011–0798 and are available online by going to *http://www.regulations.gov,* inserting USCG–2011–0798 in the ''Keywords'' box, and then clicking ''Search''. This material is also available for inspection or copying the Docket Management Facility (M–30), U.S. Department of Transportation, West Building Ground Floor, Room W12–140, 1200 New Jersey Avenue, SE., Washington, DC 20590, between 9 a.m. and 5 p.m., Monday through Friday, except Federal Holidays.

FOR FURTHER INFORMATION CONTACT: If you have questions on this rule, call or e-mail Mr. Bill H. Brazier, Bridge Management Specialist, Fifth Coast Guard District, telephone (757) 636–2416, e-mail *Bill.H.Brazier@uscg.mil.* If you have questions on reviewing the docket, call Rene V. Wright, Program Manager, Docket Operations, (202)366–9826.

SUPPLEMENTARY INFORMATION: The North Carolina Department of Transportation, who owns and operates this vertical lift bridge, has requested a temporary deviation from the current operating regulations set out in 33 CFR 117.823, to facilitate painting of the structure.

The Cape Fear Memorial Bridge, at mile 26.8, at Wilmington NC has vertical clearances in the full open and closed position to vessels of 135 feet and 65 feet, above mean high water, respectively.

Under the regular operating schedule, the bridge opens on signal as required by 33 CFR 117.5, except that under 33 CFR 117.823, the draw need not open for the passage of vessels from 8 a.m. to 10 a.m. on the second Saturday of July and from 7 a.m. to 11 a.m. on the second Sunday of November every year. This regulation does not change the provisions of 33 CFR 117.823 and therefore the draw need not open for the passage of vessels from 7 a.m. to 11 a.m. on the second Sunday of November, specifically November 13, 2011.

Under this temporary deviation, the drawbridge will operate as follows: From 6 a.m. on August 12, 2011 until and including 11:59 on December 1, 2011, vessel openings will be provided if at least three hours advance notice is given to the bridge operator at (910) 251–5773 or via marine radio on channel 18 VHF. In addition, to accommodate scaffolding, the available vertical clearances of portions of the drawbridge (up to half of the drawbridge at one time) will be reduced by approximately four feet, to 131 feet and 61 feet above mean high water, respectively. There are no alternate routes for vessels transiting this section of the Cape Fear River. The Bridge may be opened in the event of an emergency.

Typical vessel traffic on the Cape Fear River includes a variety of vessels from freighters, tug and barge traffic, and recreational vessels. Vessels that can pass under the bridge without a bridge opening may continue to do so at anytime.

The Coast Guard has carefully coordinated the restrictions with commercial and recreational waterway users. The Coast Guard will inform all users of the waterway through our Local and Broadcast Notice to Mariners of the closure periods for the bridge so that vessels can arrange their transits to minimize any impacts caused by the temporary deviation.

In accordance with 33 CFR 117.35(e), the draw must return to its original operating schedule immediately at the end of the designated time period. This deviation from the operating regulations is authorized under 33 CFR 117.35.

Dated: August 12, 2011.

Waverly W. Gregory, Jr.,

Bridge Program Manager. By direction of the Commander, Fifth Coast Guard District.

[FR Doc. 2011–21869 Filed 8–25–11; 8:45 am]

BILLING CODE 9110–04–P

DEPARTMENT OF COMMERCE

National Oceanic and Atmospheric Administration

50 CFR Part 635

RIN 0648–XA658

Atlantic Highly Migratory Species; Commercial Porbeagle Shark Fishery Closure

AGENCY: National Marine Fisheries Service (NMFS), National Oceanic and Atmospheric Administration (NOAA), Commerce.

ACTION: Temporary rule; fishery closure.

SUMMARY: NMFS is closing the commercial fishery for porbeagle sharks. This action is necessary because landings for the 2011 fishing season have reached at least 80 percent of the available quota.

DATES: The commercial porbeagle shark fishery is closed effective 11:30 p.m. local time August 29, 2011 until, and if, NMFS announces in the **Federal Register** that additional quota is available and the season is reopened.

FOR FURTHER INFORMATION CONTACT: Karyl Brewster-Geisz or Peter Cooper, 301–427–8503; fax 301–713–1917.

SUPPLEMENTARY INFORMATION: The Atlantic shark fisheries are managed under the 2006 Consolidated Atlantic Highly Migratory Species (HMS) Fishery Management Plan (FMP), its amendments, and its implementing regulations found at 50 CFR part 635 issued under authority of the Magnuson-Stevens Fishery Conservation and Management Act (16 U.S.C. 1801 *et seq.*).

Under § 635.5(b)(1), shark dealers are required to report to NMFS all sharks landed every two weeks. Dealer reports for fish received between the 1st and 15th of any month must be received by NMFS by the 25th of that month. Dealer reports for fish received between the 16th and the end of any month must be received by NMFS by the 10th of the following month. Under § 635.28(b)(2), when NMFS projects that fishing season landings for a species group have reached or are about to reach 80 percent of the available quota, NMFS will file for publication with the Office of the Federal Register a closure action for that shark species group that will be effective no fewer than 5 days from the date of filing. From the effective date and time of the closure until NMFS announces in the **Federal Register** that additional quota is available and the season is reopened, the fishery for that species group is closed, even across fishing years.

On December 8, 2010 (75 FR 76302), NMFS announced that the porbeagle shark fishery for the 2011 fishing year was open and the available porbeagle shark quota was 1.6 metric tons (mt) dressed weight (dw) (3,479 lb dw). Dealer reports through the July 31, 2011, reporting period indicate that 2.3 mt dw or 147 percent of the available quota for porbeagle sharks has been landed. Dealer reports received to date indicate that 2.6 percent of the quota was landed from the opening of the fishery on January 1, 2011, through January 31, 2011; 0.4 percent of the quota was landed in March; 39 percent was landed in May; and 33 percent of the quota was landed in June. Preliminary numbers indicate that 72 percent of the quota was landed in July. The fishery has reached 147 percent of the quota, which exceeds the 80 percent limit specified in the regulations. Accordingly, NMFS is closing the commercial porbeagle shark fishery as of 11:30 p.m. local time August 29, 2011. This closure does not affect any other shark fishery.

During the closure, retention of porbeagle sharks is prohibited for persons fishing aboard vessels issued a commercial shark limited access permit under 50 CFR 635.4, unless the vessel is properly permitted to operate as a charter vessel or headboat for HMS and is engaged in a for-hire trip, in which case the recreational retention limits for sharks and ''no sale'' provisions apply (50 CFR 635.22(a) and (c)). A shark dealer issued a permit pursuant to § 635.4 may not purchase or receive porbeagle sharks from a vessel issued an Atlantic shark limited access permit (LAP), except that a permitted shark dealer or processor may possess porbeagle sharks that were harvested, off-loaded, and sold, traded, or bartered, prior to the effective date of the closure and were held in storage. Under this closure, a shark dealer issued a permit pursuant to § 635.4 may, in accordance with state regulations, purchase or receive a porbeagle sharks if the sharks were harvested, off-loaded, and sold, traded, or bartered from a vessel that fishes only in state waters and that has not been issued an Atlantic Shark LAP, HMS Angling permit, or HMS Charter/Headboat permit pursuant to § 635.4.

Classification

Pursuant to 5 U.S.C. 553(b)(B), the Assistant Administrator for Fisheries, NOAA (AA), finds that providing for prior notice and public comment for this action is impracticable and contrary to the public interest because the fishery is currently underway, and any delay in this action would cause overharvest of the quota and be inconsistent with management requirements and objectives. If the quota is exceeded, the affected public is likely to experience reductions in the available quota and a lack of fishing opportunities in future seasons. For these reasons, the AA also finds good cause to waive the 30-day delay in effective date pursuant to 5 U.S.C. 553(d)(3). This action is required under § 635.28(b)(2) and is exempt from review under Executive Order 12866.

Authority: 16 U.S.C. 1801 *et seq.*

Dated: August 23, 2011.

James P. Burgess,

Acting Director, Office of Sustainable Fisheries, National Marine Fisheries Service.

[FR Doc. 2011–21930 Filed 8–23–11; 4:15 pm]

BILLING CODE 3510–22–P

Proposed Rules

Federal Register
Vol. 76, No. 166
Friday, August 26, 2011

This section of the FEDERAL REGISTER contains notices to the public of the proposed issuance of rules and regulations. The purpose of these notices is to give interested persons an opportunity to participate in the rule making prior to the adoption of the final rules.

FARM CREDIT ADMINISTRATION

12 CFR Part 615

RIN 3052–AC71

Funding and Fiscal Affairs, Loan Policies and Operations, and Funding Operations; Capital Adequacy Risk-Weighting Revisions: Alternatives to Credit Ratings

AGENCY: Farm Credit Administration.

ACTION: Advance notice of proposed rulemaking.

SUMMARY: Farm Credit Administration (FCA or Agency) regulations on the capital adequacy of Farm Credit System (FCS or System) institutions include various references to and requirements of reliance on credit ratings of a security or money-market instrument. Section 939A of the Dodd-Frank Wall Street Reform and Consumer Protection Act (Dodd-Frank or DFA), enacted on July 21, 2010, requires Federal agencies to remove any reference to or requirement of reliance upon such credit ratings, and substitute in their place standards of creditworthiness that they deem appropriate for such regulations. The FCA seeks public comment on alternatives to the use of credit ratings in these regulations.

DATES: You may send comments on or before November 25, 2011.

ADDRESSES: There are several methods for you to submit your comments. For accuracy and efficiency reasons, commenters are encouraged to submit comments by e-mail or through the FCA's Web site. As facsimiles (faxes) are difficult for us to process and achieve compliance with section 508 of the Rehabilitation Act, we are no longer accepting comments submitted by fax. Regardless of the method you use, please do not submit your comment multiple times via different methods. You may submit comments by any of the following methods:

- *E-mail:* Send us an e-mail at *reg-comm@fca.gov.*
- *FCA Web site: http://www.fca.gov.* Select ''Public Commenters,'' then ''Public Comments,'' and follow the directions for ''Submitting a Comment.''
- *Federal E-Rulemaking Web site: http://www.regulations.gov.* Follow the instructions for submitting comments.
- *Mail:* Send mail to Gary K. Van Meter, Director, Office of Regulatory Policy, Farm Credit Administration, 1501 Farm Credit Drive, McLean, VA 22102–5090.

You may review copies of comments we receive at our office in McLean, Virginia, or on our Web site at *http://www.fca.gov.* Once you are in the Web site, select ''Public Commenters,'' then ''Public Comments,'' and follow the directions for ''Reading Submitted Public Comments.'' We will show your comments as submitted, but for technical reasons we may omit items such as logos and special characters. Identifying information that you provide, such as phone numbers and addresses, will be publicly available. However, we will attempt to remove e-mail addresses to help reduce Internet spam.

FOR FURTHER INFORMATION CONTACT:

Chris Wilson, Financial Analyst, Office of Regulatory Policy, Farm Credit Administration, McLean, VA 22102–5090, (703) 883–4204, TTY (703) 883–4434,

or

Rebecca S. Orlich, Senior Counsel, Office of General Counsel, Farm Credit Administration, McLean, VA 22102–5090, (703) 883–4020, TTY (703) 883–4020.

I. Background

The FCA has promulgated its capital standards in 12 CFR Part 615 of its regulations. These regulations contain references to and regulatory requirements premised on the use of credit ratings issued by Nationally Recognized Statistical Rating Organizations (NRSROs).[1] Section 939A of the DFA requires each Federal agency to review ''(1) Any regulation issued by such agency that requires the use of an assessment of the creditworthiness of a security or money market instrument; and (2) any references to or requirements in such regulations regarding credit ratings.'' After such review, each agency must then ''modify any such regulation identified by the review * * * to remove any reference to or requirement of reliance on credit ratings and to substitute in such regulations such standard of creditworthiness as each respective agency shall determine as appropriate for such regulations.[2]

The FCA is seeking comments on how to revise our capital standards to comply with this requirement of Dodd-Frank.

II. FCA's Risk-Based Capital Standards

The FCA's rules for risk-weighting capital are set forth in §§ 615.5210–615.5212. Section 615.5210 describes the capital treatment of certain securitizations. Sections 615.5211 and 615.5212 describe the capital treatment of on- and off-balance-sheet assets.

FCA first adopted risk-weighting[3] categories for System assets as part of the 1988 capital adequacy regulations required by the Agricultural Credit Act of 1987. FCA adopted many elements of the 1988 Basel Accord in its risk-based capital rules. For instance, the placement of assets in risk-weight categories depends, in part, on NRSRO ratings.

In 1997,[4] 1998,[5] and 2005,[6] the FCA adopted further revisions to its risk-based capital regulations. The 1997 revisions to our capital regulations added new standards for System banks and associations, a collateral ratio for System banks, and procedures for setting higher capital standards for individual institutions and for issuing capital directives. Revisions in 1998 addressed risk-weighting and other issues. Revisions to the capital standards in 2005 implemented a ratings-based approach (RBA) for risk-weighting investments in recourse obligations, residual interests (other than credit-enhancing interest-only strips), direct credit substitutes, and

[1] An NRSRO is an entity registered with the U.S. Securities and Exchange Commission (SEC) under section 15E of the Securities and Exchange Act of 1934.

[2] *See* section 939A, Public Law 111–203, 124 Stat. 1376 (July 21, 2010).

[3] We use risk weightings to compute the risk-adjusted asset base for System banks and associations. This base is then used to calculate certain regulatory capital ratios. These regulations are in 12 CFR part 615, subparts H and K.

[4] *See* 62 FR 4429 (Jan. 30, 1997).

[5] *See* 63 FR 39219 (Jul. 22, 1998).

[6] *See* 70 FR 35336 (Jun. 17, 2005).

asset- and mortgage-backed securities.[7] Under the RBA, the risk weighting of such assets increases as the credit rating declines.

The FCA seeks to ensure that the regulatory capital framework applied to System institutions is broadly consistent with those of other Federal financial regulators (OFFRs). In addition to the rulemakings noted above, the FCA issued several Advance Notices of Proposed Rulemaking (ANPRMs) beginning in 2007 seeking comment on issues associated with adopting the standardized version of Basel II.[8] As OFFRs revise their regulatory capital rules in order to implement Basel III, the FCA intends to revise its rules accordingly.

III. Request for Comment

A. Creditworthiness Standards

In response to the mandate in Section 939A of Dodd-Frank, we are considering alternative standards of creditworthiness. Alternative standards could be developed by the regulator, the regulated entity, or some third party that is not an NRSRO. In practice, all three groups may play a role. We seek comments on the roles best played by each party. To be effective, creditworthiness standards should be based on readily available objective data and calculated using transparent methodologies and assumptions. In addition, effective creditworthiness standards should lead diverse raters to assign similar assets to similar risk categories.

In evaluating any standard of creditworthiness, we will seek, to the extent practical, and consistent with other objectives, to follow these principles:

- Foster prudent risk management by System institutions;
- Ensure that creditworthiness standards for securities and money-market instruments are consistent across all types of financial institutions and over time;
- Be transparent;
- Appropriately distinguish the credit risk associated with a particular exposure within an asset class;
- Provide for the timely and accurate measurement of changes in creditworthiness or investment quality over time;
- Allow for adequate supervisory review; and
- Be cost-efficient and strike an appropriate balance between the benefits resulting from increased accuracy of credit risk assessments and the costs of implementation.

Question 1: The FCA seeks comment on the principles that should guide the Agency's formulation of creditworthiness standards. What core principles would be most important and appropriate in FCA's development of new standards of creditworthiness? Do the principles delineated above capture the appropriate elements of sound creditworthiness standards? How could such principles be strengthened?

Question 2: How can we assure ratings consistency over time, across System institutions, and maintain consistency with the ratings of similar assets by commercial banks and other capital market participants? Should the creditworthiness standards developed for regulatory capital purposes be the same as those developed for regulation of the investment management or liquidity activities of FCS institutions?

B. Alignment of Creditworthiness Standards With the Other Federal Financial Regulators

In response to the mandate of section 939A of Dodd-Frank, OFFRs have issued ANPRMs or proposed rulemakings seeking comment on credit-rating alternatives. The Office of the Comptroller of the Currency, the Board of Governors of the Federal Reserve System, the Federal Deposit Insurance Corporation, and the Office of Thrift Supervision issued a joint ANPRM in August 2010.[9] The National Credit Union Administration (NCUA) issued a Notice of Proposed Rulemaking in March 2011.[10] The Federal Housing Finance Agency (FHFA) issued an ANPRM in January 2011.[11]

Question 3: Should the FCA seek to be consistent with the standards of creditworthiness developed by OFFRs?

C. Assignment of Risk Weights

One way to eliminate references to credit ratings in our capital regulations would be to assign risk weights using broad measures of creditworthiness. For example, our current regulations assign risk weights to certain sovereign and bank exposures according to whether or not the sovereign is a member of the Organization for Economic Cooperation and Development. This approach is simple to apply but provides little distinction among risks in this asset class.

Alternatively, we could assign risk weights using more specific measures. For example, we could assign risk weights using defined benchmark securities, such as comparable maturity U.S. Treasury securities, or using obligor-specific financial data such as debt-to-equity ratios. This approach could be more risk-sensitive but also require more effort.

Question 4: We seek comments on the benefits and drawbacks of assigning assets to risk-weighting categories based broadly on the type of obligor (such as sovereign, agency, municipal, or corporate), or based more specifically on characteristics of the instrument itself (such as collateral, tenor, spread to a benchmark, or some other evidence of marketability).

We must also eliminate use of credit ratings in our capital regulations for securitization exposures. One approach might be to require dollar-for-dollar capital on any exposure that does not meet stringent criteria for collateralization and marketability. For example, we could assign a risk weight to a senior-most tranche but require dollar-for-dollar capital for all other tranches in that security. Other approaches suggested by OFFRs would use some type of ''gross up'' treatment or other specific criteria to determine the risk weight of the exposure.[12]

Question 5: How should the FCA risk-weight structured securities, derivatives, and other exposures such as recourse obligations, direct credit substitutes and residual interests?

D. Internal Ratings-Based Models and the Use of Third Parties

One way to eliminate reliance on NRSRO ratings would be to require FCS institutions to develop internal risk exposure methodologies for making creditworthiness determinations for certain exposures. In some cases, FCS institutions may need to contract with third parties to obtain quantitative data, such as probabilities of default, as part of their internal process for making such determinations. Also, FCS institutions could continue to use the opinions of external experts as an element in assessing creditworthiness. Regardless of the approach we adopt, we would establish criteria to ensure that the methodology employed is consistent with safe and sound banking practices.

Question 6: Should each System bank be required to develop its own risk exposure methodology? Should each association be required to develop its own risk exposure methodology? If so, how should the FCA assure consistency

[7] For the RBA in the final rule, we took the approach that highly rated positions would receive a favorable risk weighting—which we characterized as being less than 100 percent.

[8] *See* 72 FR 34191 (Jun. 21, 2007), 72 FR 61568 (Oct. 31, 2007), 75 FR 39392 (Jul. 8, 2010).

[9] *See* 75 FR 52283 (Aug. 25, 2010).

[10] *See* 76 FR 11164 (Mar. 1, 2011).

[11] *See* 76 FR 5292 (Jan. 31, 2011).

[12] *See* 75 FR 52283 (Aug. 25, 2010).

across the individual methodologies? How would the FCS prepare its quarterly and annual reports to investors? Should System banks be required to develop a common risk exposure methodology?

Question 7: Are there certain types of assets that would require the use of a third party to provide data to FCS institutions as part of their internal process for making creditworthiness determinations? How could the use of third-party service providers be implemented to ensure quality, transparency, and consistency? What role should third-party assessors be allowed to play in determining creditworthiness? We seek comments on the roles best played by each party.

E. Burden

Developing alternative measures of creditworthiness will likely require significant initial and ongoing costs. Accordingly, we are seeking comment on the burden—both financial and operational—that various alternative approaches to developing such standards might entail.

Dated: August 18, 2011.

Mary Alice Donner,

Acting Secretary, Farm Credit Administration Board.

[FR Doc. 2011–21659 Filed 8–25–11; 8:45 am]

BILLING CODE 6705–01–P

DEPARTMENT OF TRANSPORTATION

Federal Aviation Administration

14 CFR Part 39

[Docket No. FAA–2011–0909; Directorate Identifier 2011–NM–027–AD]

RIN 2120–AA64

Airworthiness Directives; The Boeing Company Model DC–9–81 (MD–81), DC–9–82 (MD–82), DC–9–83 (MD–83), DC–9–87 (MD–87), and MD–88 Airplanes

AGENCY: Federal Aviation Administration (FAA), DOT.

ACTION: Notice of proposed rulemaking (NPRM).

SUMMARY: We propose to adopt a new airworthiness directive (AD) for the products listed above. This proposed AD would require repetitive high frequency eddy current (HFEC) inspections for cracking of the left and right rib hinge bearing lugs of the aft face of the center section of the horizontal stabilizer; measuring crack length and blending out cracks; and replacing the horizontal stabilizer center section rib, if necessary. This proposed AD was prompted by reports of cracks of the hinge bearing lugs of the center section ribs of the horizontal stabilizer. We are proposing this AD to detect and correct cracking in the hinge bearing lugs of the horizontal stabilizer center section ribs, which would result in failure of the lugs, and consequent inability of the horizontal stabilizer to sustain the required limit loads and loss of control of the airplane.

DATES: We must receive comments on this proposed AD by October 11, 2011.

ADDRESSES: You may send comments by any of the following methods:

- *Federal eRulemaking Portal:* Go to http://www.regulations.gov. Follow the instructions for submitting comments.
- *Fax:* 202–493–2251.
- *Mail:* U.S. Department of Transportation, Docket Operations, M–30, West Building Ground Floor, Room W12–140, 1200 New Jersey Avenue, SE., Washington, DC 20590.
- *Hand Delivery:* Deliver to Mail address above between 9 a.m. and 5 p.m., Monday through Friday, except Federal holidays.

For service information identified in this proposed AD, contact Boeing Commercial Airplanes, Attention: Data & Services Management, 3855 Lakewood Boulevard, MC D800–0019, Long Beach, California 90846–0001; telephone 206–544–5000, extension 2; fax 206–766–5683; e-mail *dse.boecom@boeing.com;* Internet *https://www.myboeingfleet.com.* You may review copies of the referenced service information at the FAA, Transport Airplane Directorate, 1601 Lind Avenue, SW., Renton, Washington. For information on the availability of this material at the FAA, call 425–227–1221.

Examining the AD Docket

You may examine the AD docket on the Internet at *http://www.regulations.gov;* or in person at the Docket Management Facility between 9 a.m. and 5 p.m., Monday through Friday, except Federal holidays. The AD docket contains this proposed AD, the regulatory evaluation, any comments received, and other information. The street address for the Docket Office (phone: 800–647–5527) is in the **ADDRESSES** section. Comments will be available in the AD docket shortly after receipt.

FOR FURTHER INFORMATION CONTACT: Roger Durbin, Aerospace Engineer, Airframe Branch, ANM–120L, FAA, Los Angeles Aircraft Certification Office, 3960 Paramount Boulevard, Lakewood, California 90712–4137; phone: 562–627–5233; fax: 562–627–5210; e-mail: roger.durbin@faa.gov.

SUPPLEMENTARY INFORMATION:

Comments Invited

We invite you to send any written relevant data, views, or arguments about this proposal. Send your comments to an address listed under the **ADDRESSES** section. Include ''Docket No. FAA–2011–0909; Directorate Identifier 2011–NM–027–AD'' at the beginning of your comments. We specifically invite comments on the overall regulatory, economic, environmental, and energy aspects of this proposed AD. We will consider all comments received by the closing date and may amend this proposed AD because of those comments.

We will post all comments we receive, without change, to *http://www.regulations.gov,* including any personal information you provide. We will also post a report summarizing each substantive verbal contact we receive about this proposed AD.

Discussion

We received reports of cracks on Model MD–80 series airplanes and on Model MD–90–30 airplanes. The cracks were found on the aft face of the center section left and right hinge bearing lugs on either the left or right, or in two cases, on both sides of the center section ribs of the horizontal stabilizer. Cracks were reported on Model MD–80 airplanes that had accumulated 23,700 to 41,963 total flight hours, and 23,300 to 35,294 total flight cycles. The cause of the cracking has not been determined. Undetected cracking in the hinge bearing lugs of the center section of the left and right ribs, if not corrected, could result in failure of the hinge bearing lugs and consequent inability of the horizontal stabilizer to sustain required limit loads and loss of control of the airplane.

Related Rulemaking

The proposed AD affects Model MD–80 series airplanes. We issued AD 2011–01–11, Amendment 39–16565 (76 FR 430, January 5, 2011) to address the identified unsafe condition on Model MD–90–30 airplanes, on December 22, 2010. AD 2011–01–11 requires similar actions as proposed in this NPRM.

Relevant Service Information

We reviewed Boeing Alert Service Bulletin MD80–55A069, dated January 19, 2011. That service bulletin describes procedures for repetitive high frequency eddy current (HFEC) inspections for cracking of the left and right rib hinge bearing lugs of the aft face of the center

section of the horizontal stabilizer; measuring crack length and blending out cracks; and replacement of the horizontal stabilizer center section rib, if necessary.

FAA's Determination and Proposed AD Requirements

We are proposing this AD because we evaluated all the relevant information and determined the unsafe condition described previously is likely to exist or develop in other products of these same type designs. This proposed AD would require accomplishing the actions specified in the service information described previously, except as discussed under ''Differences Between the Proposed AD and the Service Information.''

Differences Between the Proposed AD and the Service Information

Although Boeing Alert Service Bulletin MD80–55A069, dated January 19, 2011, specifies to send the inspection results to the manufacturer, this proposed AD would not require any report.

Interim Action

We consider this proposed AD interim action since investigation is ongoing and no terminating action has been developed yet. The manufacturer is currently developing a modification that will address the unsafe condition identified in this AD. Once this modification is developed, approved, and available, we may consider additional rulemaking.

Costs of Compliance

We estimate that this proposed AD affects 668 airplanes of U.S. registry. We estimate the following costs to comply with this proposed AD:

ESTIMATED COSTS

Action	Labor cost	Parts cost	Cost per product	Cost on U.S. operators
Inspection	6 work-hours × $85 per hour = $510 per inspection cycle.	$0	$510	$340,680

We have received no definitive data that would enable us to provide labor cost estimates for the on-condition actions (blend-out repair(s) or replacement of center section rib(s)) specified in this proposed AD. However, we have been advised that replacement parts would be $14,500 per horizontal stabilizer rib crack repair kit.

Authority for This Rulemaking

Title 49 of the United States Code specifies the FAA's authority to issue rules on aviation safety. Subtitle I, section 106, describes the authority of the FAA Administrator. Subtitle VII: Aviation Programs, describes in more detail the scope of the Agency's authority.

We are issuing this rulemaking under the authority described in Subtitle VII, Part A, Subpart III, Section 44701: ''General requirements.'' Under that section, Congress charges the FAA with promoting safe flight of civil aircraft in air commerce by prescribing regulations for practices, methods, and procedures the Administrator finds necessary for safety in air commerce. This regulation is within the scope of that authority because it addresses an unsafe condition that is likely to exist or develop on products identified in this rulemaking action.

Regulatory Findings

We determined that this proposed AD would not have federalism implications under Executive Order 13132. This proposed AD would not have a substantial direct effect on the States, on the relationship between the national Government and the States, or on the distribution of power and responsibilities among the various levels of government.

For the reasons discussed above, I certify this proposed regulation:

(1) Is not a ''significant regulatory action'' under Executive Order 12866,

(2) Is not a ''significant rule'' under the DOT Regulatory Policies and Procedures (44 FR 11034, February 26, 1979),

(3) Will not affect intrastate aviation in Alaska, and

(4) Will not have a significant economic impact, positive or negative, on a substantial number of small entities under the criteria of the Regulatory Flexibility Act.

List of Subjects in 14 CFR Part 39

Air transportation, Aircraft, Aviation safety, Incorporation by reference, Safety.

The Proposed Amendment

Accordingly, under the authority delegated to me by the Administrator, the FAA proposes to amend 14 CFR part 39 as follows:

PART 39—AIRWORTHINESS DIRECTIVES

1. The authority citation for part 39 continues to read as follows:

Authority: 49 U.S.C. 106(g), 40113, 44701.

§ 39.13 [Amended]

2. The FAA amends § 39.13 by adding the following new airworthiness directive (AD):

The Boeing Company: Docket No. FAA–2011–0909; Directorate Identifier 2011–NM–027–AD.

Comments Due Date

(a) We must receive comments by October 11, 2011.

Affected ADs

(b) None.

Applicability

(c) This AD applies to The Boeing Company Model DC–9–81 (MD–81), DC–9–82 (MD–82), DC–9–83 (MD–83), DC–9–87 (MD–87), and MD–88 airplanes, certificated in any category, as identified in Boeing Alert Service Bulletin MD80–55A069, dated January 19, 2011.

Subject

(d) Air Transport Association (ATA) of America Code 55: Stabilizers.

Unsafe Condition

(e) This AD was prompted by reports of cracks of the hinge bearing lugs of the center section ribs of the horizontal stabilizer. We are proposing this AD to detect and correct cracking in the hinge bearing lugs of the horizontal stabilizer center section ribs, which would result in failure of the lugs, and consequent inability of the horizontal stabilizer to sustain the required limit loads and loss of control of the airplane.

Compliance

(f) Comply with this AD within the compliance times specified, unless already done.

Actions on Horizontal Stabilizer Ribs Made From 7075–T7351 Material

(g) For Group 1 airplanes, as identified in Boeing Alert Service Bulletin MD80–55A069, dated January 19, 2011: Before the accumulation of 23,000 total flight cycles, or within 4,383 flight cycles after the effective

date of this AD, whichever occurs later, do a high frequency eddy current (HFEC) inspection for cracking of the left and right rib hinge bearing lugs of the aft face of the center section of the horizontal stabilizer, in accordance with the Accomplishment Instructions of Boeing Alert Service Bulletin MD80–55A069, dated January 19, 2011. For any crack-free lug, repeat the inspection on that lug thereafter at intervals not to exceed 8,200 flight cycles.

(h) If, during any inspection required by paragraph (g) of this AD, any crack is found, before further flight, measure the length of the crack between the points specified in Boeing Alert Service Bulletin MD80–55A069, dated January 19, 2011. Do the action in accordance with the Accomplishment Instructions of Boeing Alert Service Bulletin MD80–55A069, dated January 19, 2011.

(1) If the crack length between points 'A' and 'B' is less than or equal to 0.15 inch and the crack length between points 'C' and 'D' is less than or equal to 0.05 inch: Before further flight, blend out the crack, in accordance with the Accomplishment Instructions of Boeing Alert Service Bulletin MD80–55A069, dated January 19, 2011. Within 15,600 flight cycles after doing the blend out, do an HFEC inspection of the blend out on the center section rib hinge bearing lug for cracking, in accordance with the Accomplishment Instructions of Boeing Alert Service Bulletin MD80–55A069, dated January 19, 2011, and repeat that inspection thereafter at intervals not to exceed 3,900 flight cycles.

(2) If the crack length between points 'A' and 'B' is greater than 0.15 inch or the crack length between points 'C' and 'D' is greater than 0.05 inch: Before further flight, replace the horizontal stabilizer center section rib with a new horizontal stabilizer center section rib, in accordance with the Accomplishment Instructions of Boeing Alert Service Bulletin MD80–55A069, dated January 19, 2011. Repeat the inspection required by paragraph (g) of this AD one time before the accumulation of 23,000 total flight cycles on the new horizontal stabilizer center section rib, and thereafter at intervals not to exceed 11,300 flight cycles.

Actions on Horizontal Stabilizer Ribs Made From 7050–T7451 Material

(i) For Group 2 airplanes, as identified in Boeing Alert Service Bulletin MD80–55A069, dated January 19, 2011: Before the accumulation of 23,000 total flight cycles, or within 4,383 flight cycles after the effective date of this AD, whichever occurs later, do an HFEC inspection for cracking of the left and right rib hinge bearing lugs of the aft face of the center section of the horizontal stabilizer, in accordance with the Accomplishment Instructions of Boeing Alert Service Bulletin MD80–55A069, dated January 19, 2011. For any crack-free lug, repeat the inspection on that lug thereafter at intervals not to exceed 11,300 flight cycles.

(j) If, during any inspection required by paragraph (i) of this AD, any crack is found, before further flight, measure the length of the crack between the points specified in and in accordance with the Accomplishment Instructions of Boeing Alert Service Bulletin MD80–55A069, dated January 19, 2011.

(1) If the crack length between points 'A' and 'B' is less than or equal to 0.15 inch and the crack length between points 'C' and 'D' is less than or equal to 0.05 inch: Before further flight, blend out the crack, in accordance with the Accomplishment Instructions of Boeing Alert Service Bulletin MD80–55A069, dated January 19, 2011. Within 15,600 flight cycles after doing the blend out, do an HFEC inspection of the blend out on the center section rib hinge bearing lug for cracking, in accordance with the Accomplishment Instructions of Boeing Alert Service Bulletin MD80–55A069, dated January 19, 2011, and repeat that inspection thereafter at intervals not to exceed 5,800 flight cycles.

(2) If the crack length between points 'A' and 'B' is greater than 0.15 inch or the crack length between points 'C' and 'D' is greater than 0.05 inch: Before further flight, replace the horizontal stabilizer center section rib with a new horizontal stabilizer center section rib, in accordance with the Accomplishment Instructions of Boeing Alert Service Bulletin MD80–55A069, dated January 19, 2011. Repeat the inspection required by paragraph (i) of this AD one time before the accumulation of 23,000 total flight cycles on the new horizontal stabilizer center section rib, and thereafter at intervals not to exceed 11,300 flight cycles.

No Reporting Requirement

(k) Although Boeing Alert Service Bulletin MD80–55A069, dated January 19, 2011, specifies to submit certain information to the manufacturer, this AD does not include that requirement.

Alternative Methods of Compliance (AMOCs)

(l)(1) The Manager, Los Angeles Aircraft Certification Office (ACO), FAA, has the authority to approve AMOCs for this AD, if requested using the procedures found in 14 CFR 39.19. In accordance with 14 CFR 39.19, send your request to your principal inspector or local Flight Standards District Office, as appropriate. If sending information directly to the manager of the ACO, send it to the attention of the person identified in the Related Information section of this AD.

(2) Before using any approved AMOC, notify your appropriate principal inspector, or lacking a principal inspector, the manager of the local flight standards district office/certificate holding district office.

(3) An AMOC that provides an acceptable level of safety may be used for any repair required by this AD if it is approved by the Boeing Commercial Airplanes Organization Designation Authorization (ODA) that has been authorized by the Manager, Los Angeles ACO to make those findings. For a repair method to be approved, the repair must meet the certification basis of the airplane and 14 CFR 25.571, Amendment 45, and the approval must specifically refer to this AD.

Related Information

(m) For more information about this AD, contact Roger Durbin, Aerospace Engineer, Airframe Branch, ANM–120L, FAA, Los Angeles Aircraft Certification Office, 3960 Paramount Boulevard, Lakewood, California 90712–4137; phone: 562–627–5233; fax 562–627–5210; e-mail: *roger.durbin@faa.gov.*

(n) For service information identified in this AD, contact Boeing Commercial Airplanes, Attention: Data & Services Management, 3855 Lakewood Boulevard, MC D800–0019, Long Beach, California 90846–0001; telephone 206–544–5000, extension 2; fax 206–766–5683; e-mail *dse.boecom@boeing.com;* Internet *https://www.myboeingfleet.com.* You may review copies of the referenced service information at the FAA, Transport Airplane Directorate, 1601 Lind Avenue, SW., Renton, Washington. For information on the availability of this material at the FAA, call 425–227–1221.

Issued in Renton, Washington, on August 19, 2011.

Ali Bahrami,

Manager, Transport Airplane Directorate, Aircraft Certification Service.

[FR Doc. 2011–21853 Filed 8–25–11; 8:45 am]

BILLING CODE 4910–13–P

DEPARTMENT OF TRANSPORTATION

Federal Aviation Administration

14 CFR Part 39

[Docket No. FAA–2011–0908; Directorate Identifier 2010–NM–251–AD]

RIN 2120–AA64

Airworthiness Directives; BAE SYSTEMS (Operations) Limited Model BAe 146 Airplanes and Model Avro 146–RJ Airplanes

AGENCY: Federal Aviation Administration (FAA), DOT.

ACTION: Notice of proposed rulemaking (NPRM).

SUMMARY: We propose to adopt a new airworthiness directive (AD) for the products listed above that would supersede an existing AD. This proposed AD results from mandatory continuing airworthiness information (MCAI) originated by an aviation authority of another country to identify and correct an unsafe condition on an aviation product. The MCAI describes the unsafe condition as:

* * * * *

* * * BAE Systems (Operations) Limited has amended the AMM [aircraft maintenance manual] to remove the life limits on shock absorber assemblies, but not the individual shock absorber components, and amend the life limits on the different standards of Main Landing Gear (MLG) Up-Locks and MLG Door Up-Locks in sub-chapter 05–10–15. In addition BAE Systems has amended Chapter 05–10–15 of the AMM to introduce and amend life limits on MLG components.

* * * * *

The unsafe condition is fatigue cracking of certain structural elements which

could adversely affect the structural integrity of these airplanes. The proposed AD would require actions that are intended to address the unsafe condition described in the MCAI.

DATES: We must receive comments on this proposed AD by October 11, 2011.

ADDRESSES: You may send comments by any of the following methods:

- *Federal eRulemaking Portal:* Go to *http://www.regulations.gov.* Follow the instructions for submitting comments.
- *Fax:* (202) 493–2251.
- *Mail:* U.S. Department of Transportation, Docket Operations, M–30, West Building Ground Floor, Room W12–140, 1200 New Jersey Avenue, SE., Washington, DC 20590.
- *Hand Delivery:* U.S. Department of Transportation, Docket Operations, M–30, West Building Ground Floor, Room W12–140, 1200 New Jersey Avenue, SE., Washington, DC, between 9 a.m. and 5 p.m., Monday through Friday, except Federal holidays.

For service information identified in this proposed AD, contact BAE SYSTEMS (OPERATIONS) LIMITED, Customer Information Department, Prestwick International Airport, Ayrshire, KA9 2RW, Scotland, United Kingdom; telephone +44 1292 675207; fax +44 1292 675704; e-mail *RApublications@baesystems.com;* Internet *http://www.baesystems.com/Businesses/RegionalAircraft/index.htm.* You may review copies of the referenced service information at the FAA, Transport Airplane Directorate, 1601 Lind Avenue, SW., Renton, Washington. For information on the availability of this material at the FAA, call 425–227–1221.

Examining the AD Docket

You may examine the AD docket on the Internet at *http://www.regulations.gov;* or in person at the Docket Operations office between 9 a.m. and 5 p.m., Monday through Friday, except Federal holidays. The AD docket contains this proposed AD, the regulatory evaluation, any comments received, and other information. The street address for the Docket Operations office (telephone (800) 647–5527) is in the **ADDRESSES** section. Comments will be available in the AD docket shortly after receipt.

FOR FURTHER INFORMATION CONTACT: Todd Thompson, Aerospace Engineer, International Branch, ANM–116, Transport Airplane Directorate, FAA, 1601 Lind Avenue, SW., Renton, Washington 98057–3356; telephone (425) 227–1175; fax (425) 227–1149.

SUPPLEMENTARY INFORMATION:

Comments Invited

We invite you to send any written relevant data, views, or arguments about this proposed AD. Send your comments to an address listed under the **ADDRESSES** section. Include ''Docket No. FAA–2011–0908; Directorate Identifier 2010–NM–251–AD'' at the beginning of your comments. We specifically invite comments on the overall regulatory, economic, environmental, and energy aspects of this proposed AD. We will consider all comments received by the closing date and may amend this proposed AD based on those comments.

We will post all comments we receive, without change, to *http://www.regulations.gov,* including any personal information you provide. We will also post a report summarizing each substantive verbal contact we receive about this proposed AD.

Discussion

On May 3, 2010, we issued AD 2010–10–22, Amendment 39–16301 (75 FR 28463, May 21, 2010). That AD required actions intended to address an unsafe condition on the products listed above.

Since we issued AD 2010–10–22, we have determined that new life limits on certain main landing gear components are necessary. The European Aviation Safety Agency (EASA), which is the Technical Agent for the Member States of the European Community, has issued EASA Airworthiness Directive 2010–0166, dated August 6, 2010 (referred to after this as ''the MCAI''), to correct an unsafe condition for the specified products. The MCAI states:

> The BAe 146/AVRO 146–RJ Aircraft Maintenance Manual (AMM) includes chapters 05–10 ''Time Limits'', 05–15 ''Critical Design Configuration Control Limitations (CDCCL)—Fuel System Description and Operation'' and 05–20 ''Scheduled Maintenance Checks'', some sub-chapters of which have been identified as requirements for continued airworthiness and [EASA] AD 2009–0215 [which corresponds to FAA AD 2010–10–22] was issued to require operators to comply with those instructions.
>
> Since the issuance of that AD [2009–0215] BAE Systems (Operations) Limited has amended the AMM to remove the life limits on shock absorber assemblies, but not the individual shock absorber components, and amend the life limits on the different standards of Main Landing Gear (MLG) Up-Locks and MLG Door Up-Locks in sub-chapter 05–10–15. In addition BAE Systems has amended Chapter 05–10–15 of the AMM to introduce and amend life limits on MLG components.
>
> For the reasons described above, this [EASA] AD amends the requirements of AD 2009–0215, which is superseded, and requires the implementation of the instructions, limitations, inspections and corrective measures as specified in the defined parts of Chapter 05 of the AMM at Revision 100.

The unsafe condition is fatigue cracking of certain structural elements which could adversely affect the structural integrity of these airplanes. You may obtain further information by examining the MCAI in the AD docket.

Relevant Service Information

BAE SYSTEMS (Operations) Limited has issued Subject 05–10–15, ''Aircraft Equipment Airworthiness Limitations,'' of Chapter 05, ''Time Limits/Maintenance Checks,'' of BAe 146 Series/AVRO 146–RJ Series Aircraft Maintenance Manual, Revision 104, dated April 15, 2011. The actions described in this service information are intended to correct the unsafe condition identified in the MCAI.

FAA's Determination and Requirements of This Proposed AD

This product has been approved by the aviation authority of another country, and is approved for operation in the United States. Pursuant to our bilateral agreement with the State of Design Authority, we have been notified of the unsafe condition described in the MCAI and service information referenced above. We are proposing this AD because we evaluated all pertinent information and determined an unsafe condition exists and is likely to exist or develop on other products of the same type design.

Differences Between This AD and the MCAI or Service Information

We have reviewed the MCAI and related service information and, in general, agree with their substance. But we might have found it necessary to use different words from those in the MCAI to ensure the AD is clear for U.S. operators and is enforceable. In making these changes, we do not intend to differ substantively from the information provided in the MCAI and related service information.

We might also have proposed different actions in this AD from those in the MCAI in order to follow FAA policies. Any such differences are highlighted in a NOTE within the proposed AD.

Costs of Compliance

Based on the service information, we estimate that this proposed AD would affect about 2 products of U.S. registry.

The actions that are required by AD 2010–10–22 and retained in this proposed AD take about 2 work-hours per product, at an average labor rate of $85 per work hour. Required parts cost

about $0 per product. Based on these figures, the estimated cost of the currently required actions is $170 per product.

We estimate that it would take about 1 work-hour per product to comply with the new basic requirements of this proposed AD. The average labor rate is $85 per work-hour. Based on these figures, we estimate the cost of the proposed AD on U.S. operators to be $170, or $85 per product.

Authority for This Rulemaking

Title 49 of the United States Code specifies the FAA's authority to issue rules on aviation safety. Subtitle I, section 106, describes the authority of the FAA Administrator. ''Subtitle VII: Aviation Programs,'' describes in more detail the scope of the Agency's authority.

We are issuing this rulemaking under the authority described in ''Subtitle VII, Part A, Subpart III, Section 44701: General requirements.'' Under that section, Congress charges the FAA with promoting safe flight of civil aircraft in air commerce by prescribing regulations for practices, methods, and procedures the Administrator finds necessary for safety in air commerce. This regulation is within the scope of that authority because it addresses an unsafe condition that is likely to exist or develop on products identified in this rulemaking action.

Regulatory Findings

We determined that this proposed AD would not have federalism implications under Executive Order 13132. This proposed AD would not have a substantial direct effect on the States, on the relationship between the national Government and the States, or on the distribution of power and responsibilities among the various levels of government.

For the reasons discussed above, I certify this proposed regulation:

1. Is not a ''significant regulatory action'' under Executive Order 12866,

2. Is not a ''significant rule'' under the DOT Regulatory Policies and Procedures (44 FR 11034, February 26, 1979),

3. Will not have a significant economic impact, positive or negative, on a substantial number of small entities under the criteria of the Regulatory Flexibility Act.

We prepared a regulatory evaluation of the estimated costs to comply with this proposed AD and placed it in the AD docket.

List of Subjects in 14 CFR Part 39

Air transportation, Aircraft, Aviation safety, Incorporation by reference, Safety.

The Proposed Amendment

Accordingly, under the authority delegated to me by the Administrator, the FAA proposes to amend 14 CFR part 39 as follows:

PART 39—AIRWORTHINESS DIRECTIVES

1. The authority citation for part 39 continues to read as follows:

Authority: 49 U.S.C. 106(g), 40113, 44701.

§ 39.13 [Amended]

2. The FAA amends § 39.13 by removing Amendment 39–16301 (75 FR 28463, May 21, 2010) and adding the following new AD:

BAE SYSTEMS (OPERATIONS) LIMITED: Docket No. FAA–2011–0908; Directorate Identifier 2010–NM–251–AD.

Comments Due Date

(a) We must receive comments by October 11, 2011.

Affected ADs

(b) This AD supersedes AD 2010–10–22, Amendment 39–16301.

Applicability

(c) This AD applies to all BAE SYSTEMS (OPERATIONS) LIMITED Model BAe 146–100A, –200A, and –300A airplanes; and Model Avro 146–RJ70A, 146–RJ85A, and 146–RJ100A airplanes; certificated in any category.

Note 1: This AD requires revisions to certain operator maintenance documents to include new actions (*e.g.,* inspections) and/or Critical Design Configuration Control Limitations (CDCCLs). Compliance with these actions and/or CDCCLs is required by 14 CFR 91.403(c). For airplanes that have been previously modified, altered, or repaired in the areas addressed by this AD, the operator may not be able to accomplish the actions described in the revisions. In this situation to comply with 14 CFR 91.403(c), the operator must request approval of an alternative method of compliance (AMOC) according to paragraph (l) of this AD. The request should include a description of changes to the required actions that will ensure the continued operational safety of the airplane.

Subject

(d) Air Transport Association (ATA) of America Code 05

Reason

(e) The mandatory continuing airworthiness information (MCAI) states:

* * * * *

* * * BAE Systems (Operations) Limited has amended the AMM [aircraft maintenance manual] to remove the life limits on shock absorber assemblies, but not the individual shock absorber components, and amend the life limits on the different standards of Main Landing Gear (MLG) Up-Locks and MLG Door Up-Locks in sub-chapter 05–10–15. In addition BAE Systems has amended Chapter 05–10–15 of the AMM to introduce and amend life limits on MLG components.

* * * * *

Compliance

(f) You are responsible for having the actions required by this AD performed within the compliance times specified, unless the actions have already been done.

Restatement of Certain Requirements of AD 2010–10–22

New Airworthiness Limitations Revisions

(g) Within 90 days after June 25, 2010 (the effective date of AD 2010–10–22), revise the maintenance program, by incorporating Chapter 5 of the BAE SYSTEMS (Operations) Limited BAe146 Series/Avro146–RJ Series AMM to incorporate new and more restrictive life limits for certain items and new and more restrictive inspections to detect fatigue cracking in certain structures, and to add fuel system critical design configuration control limitations (CDCCLs) to prevent ignition sources in the fuel tanks, in accordance with a method approved by the Manager, International Branch, ANM–116, Transport Airplane Directorate, FAA; or the European Aviation Safety Agency (EASA) (or its delegated agent).

Note 2: Guidance on revising Chapter 5 of the BAE SYSTEMS (Operations) Limited BAe146 Series/Avro146–RJ Series AMM, Revision 97, dated July 15, 2009, can be found in the applicable sub-chapters listed in Table 1 of this AD.

TABLE 1—APPLICABLE AMM SUB-CHAPTERS

AMM Sub-chapter	Subject
05–10–01	Airframe Airworthiness Limitations before Life Extension Programme.
05–10–05 [1]	Airframe Airworthiness Limitations, Life Extension Programme Landings Life Extended.
05–10–10 [2]	Airframe Airworthiness Limitations, Life Extension Programme Calendar Life Extended.
05–10–15	Aircraft Equipment—Airworthiness Limitations.
05–10–17	Power Plant Airworthiness Limitations.
05–15–00	Critical Design Configuration Control Limitations (CDCCL)—Fuel System Description and Operation.
05–20–00 [3]	Scheduled Maintenance.

TABLE 1—APPLICABLE AMM SUB-CHAPTERS—Continued

AMM Sub-chapter	Subject
05–20–01	Airframe Scheduled Maintenance—Before Life Extension Programme.
05–20–05 [1]	Airframe Scheduled Maintenance—Life Extension Programme Landings Life Extended.
05–20–10 [2]	Airframe Scheduled Maintenance—Life Extension Programme Calendar Life Extended.
05–20–15	Aircraft Equipment Scheduled Maintenance.

[1] Applicable only to airplanes post-modification HCM20011A or HCM20012A or HCM20013A.
[2] Applicable only to airplanes post-modification HCM20010A.
[3] Paragraphs 5 and 6 only, on the Corrosion Prevention and Control Program (CPCP) and the Supplemental Structural Inspection Document (SSID).

Note 3: Sub-chapter 05–15–00 of the BAE SYSTEMS (Operations) Limited BAe146 Series/Avro146–RJ Series AMM, is the CDCCL.

Note 4: Within Sub-chapter 05–20–00 of the BAE SYSTEMS (Operations) Limited BAe146 Series/Avro 146–RJ Series AMM, the relevant issues of the support documents are as follows: BAE SYSTEMS (Operations) Limited BAe 146 Series/Avro 146–RJ Corrosion Prevention and Control Program Document CPCP–146–01, Revision 3, dated July 15, 2008, including BAE SYSTEMS (Operations) Limited Temporary Revision (TR) 2.1, dated December 2008; and BAE SYSTEMS (Operations) Limited BAe146 Series Supplemental Structural Inspection Document SSID–146–01, Revision 1, dated June 15, 2009.

Note 5: Within Sub-chapter 05–20–01 of the BAE SYSTEMS (Operations) Limited BAe146 Series/Avro146–RJ Series AMM, the relevant issue of BAE SYSTEMS (Operations) Limited BAe 146/Avro 146–RJ Maintenance Review Board Report Document MRB 146–01, Issue 2, is Revision 15, dated March 2009 (mis-identified in EASA AD 2009–0215, dated October 7, 2009, as being dated May 2009).

Note 6: Notwithstanding any other maintenance or operational requirements, components that have been identified as airworthy or installed on the affected airplanes before revision of Chapter 5 of the AMM, as required by paragraph (g) of this AD; do not need to be reworked in accordance with the CDCCLs. However, once the ALS or AMM has been revised, future maintenance actions on these components must be done in accordance with the CDCCLs.

(h) Except as specified in paragraphs (i) and (j) of this AD: After the actions specified in paragraph (g) of this AD have been accomplished, no alternative inspections or inspection intervals may be approved for the structural elements specified in the documents listed in paragraph (g) of this AD.

(i) Modifying the main fittings of the main landing gear in accordance with Messier-Dowty Service Bulletin 146–32–171, dated August 11, 2009, extends the safe limit of the main landing gear main fitting from 32,000 landings to 50,000 landings on the main fitting.

New Requirements of This AD

New Airworthiness Limitations Revisions

(j) Within 90 days after the effective date of this AD, revise the maintenance program, by incorporating Sub-chapter 05–10–15, ''Aircraft Equipment Airworthiness Limitations'' of Chapter 05, ''Time Limits/Maintenance Checks,'' of the BAE SYSTEMS (Operations) Limited BAe 146 Series/Avro 146–RJ Series AMM, Revision 104, dated April 15, 2011, to remove life limits on shock absorber assemblies, but not the individual shock absorber components, amend life limits on MLG up-locks and door up-locks, and to introduce and amend life limits on MLG components. Incorporating the new life limits and inspections into the maintenance program terminates the requirements of paragraph (g) of this AD for Sub-chapter 05–10–15, ''Aircraft Equipment Airworthiness Limitations'' of Chapter 05, ''Time Limits/Maintenance Checks,'' of the BAE SYSTEMS (Operations) Limited BAe 146 Series/Avro 146–RJ Series AMM, Revision 104, dated April 15, 2011, and after incorporation has been done, the limitations required by paragraph (g) of this AD for Sub-chapter 05–10–15, ''Aircraft Equipment Airworthiness Limitations'' of Chapter 05, ''Time Limits/Maintenance Checks,'' of the BAE SYSTEMS (Operations) Limited BAe 146 Series/Avro 146–RJ Series AMM, Revision 104, dated April 15, 2011, may be removed from the maintenance program.

No Alternative Actions, Intervals, and/or Critical Design Configuration Control Limitations (CDCCLs)

(k) After accomplishing the revision required by paragraph (j) of this AD, no alternative actions (*e.g.,* inspections), intervals, and/or CDCCLs may be used, unless the actions, intervals, and/or CDCCLs are approved as an alternative method of compliance (AMOC) in accordance with the procedures specified in paragraph (l) of this AD.

FAA AD Differences

Note 7: This AD differs from the MCAI and/or service information as follows: Although EASA Airworthiness Directive 2010–0166, dated August 6, 2010, specifies both revising the maintenance program to include limitations, and doing certain repetitive actions (*e.g.,* inspections) and/or maintaining CDCCLs, this AD only requires the revision. Requiring a revision of the maintenance program, rather than requiring individual repetitive actions and/or maintaining CDCCLs, requires operators to record AD compliance only at the time the revision is made. Repetitive actions and/or maintaining CDCCLs specified in the airworthiness limitations must be complied within accordance with 14 CFR 91.403(c).

Other FAA AD Provisions

(l) The following provisions also apply to this AD:

(1) *Alternative Methods of Compliance (AMOCs):* The Manager, International Branch, ANM–116, FAA, has the authority to approve AMOCs for this AD, if requested using the procedures found in 14 CFR 39.19. In accordance with 14 CFR 39.19, send your request to your principal inspector or local Flight Standards District Office, as appropriate. If sending information directly to the International Branch, send it to ATTN: Todd Thompson, Aerospace Engineer, International Branch, ANM–116, Transport Airplane Directorate, FAA, 1601 Lind Avenue, SW., Renton, Washington 98057–3356; telephone (425) 227–1175; fax (425) 227–1149. Information may be e-mailed to: *9-ANM-116-AMOC-REQUESTS@faa.gov.* Before using any approved AMOC, notify your appropriate principal inspector, or lacking a principal inspector, the manager of the local flight standards district office/certificate holding district office. The AMOC approval letter must specifically reference this AD.

(2) *Airworthy Product:* For any requirement in this AD to obtain corrective actions from a manufacturer or other source, use these actions if they are FAA-approved. Corrective actions are considered FAA-approved if they are approved by the State of Design Authority (or their delegated agent). You are required to assure the product is airworthy before it is returned to service.

Related Information

(m) Refer to MCAI EASA Airworthiness Directive 2010–0166, dated August 6, 2010; and Sub-chapter 05–10–15, ''Aircraft Equipment Airworthiness Limitations,'' of Chapter 05, ''Time Limits/Maintenance Checks,'' of the BAE SYSTEMS (Operations) Limited BAe 146 Series/Avro 146–RJ Series AMM, Revision 104, dated April 15, 2011; for related information.

Issued in Renton, Washington, on August 19, 2011.

Ali Bahrami,

Manager, Transport Airplane Directorate, Aircraft Certification Service.

[FR Doc. 2011–21851 Filed 8–25–11; 8:45 am]

BILLING CODE 4910–13–P

DEPARTMENT OF TRANSPORTATION

Federal Aviation Administration

14 CFR Part 71

[Docket No. FAA–2011–0498; Airspace Docket No. 11–ASW–5]

Proposed Amendment of Class E Airspace; Alice, TX

AGENCY: Federal Aviation Administration (FAA), DOT.

ACTION: Notice of proposed rulemaking (NPRM).

SUMMARY: This action proposes to amend Class E airspace in the Alice, TX, area. Cancellation of all standard instrument approach procedures at Old Hoppe Place Airport, Agua Dulce, TX, has made this action necessary for the safety and management of Instrument Flight Rules (IFR) operations in the Alice, TX, area.

DATES: 0901 UTC. Comments must be received on or before October 11, 2011.

ADDRESSES: Send comments on this proposal to the U.S. Department of Transportation, Docket Operations, 1200 New Jersey Avenue, SE., West Building Ground Floor, Room W12–140, Washington, DC 20590–0001. You must identify the docket number FAA–2011–0498/Airspace Docket No. 11–ASW–5, at the beginning of your comments. You may also submit comments through the Internet at *http://www.regulations.gov.* You may review the public docket containing the proposal, any comments received, and any final disposition in person in the Dockets Office between 9 a.m. and 5 p.m., Monday through Friday, except Federal holidays. The Docket Office (telephone 1–800–647–5527), is on the ground floor of the building at the above address.

FOR FURTHER INFORMATION CONTACT: Scott Enander, Central Service Center, Operations Support Group, Federal Aviation Administration, Southwest Region, 2601 Meacham Blvd., Fort Worth, TX 76137; telephone: (817) 321–7716.

SUPPLEMENTARY INFORMATION:

Comments Invited

Interested parties are invited to participate in this proposed rulemaking by submitting such written data, views, or arguments, as they may desire. Comments that provide the factual basis supporting the views and suggestions presented are particularly helpful in developing reasoned regulatory decisions on the proposal. Comments are specifically invited on the overall regulatory, aeronautical, economic, environmental, and energy-related aspects of the proposal. Communications should identify both docket numbers and be submitted in triplicate to the address listed above. Commenters wishing the FAA to acknowledge receipt of their comments on this notice must submit with those comments a self-addressed, stamped postcard on which the following statement is made: ''Comments to Docket No. FAA–2011–0498/Airspace Docket No. 11–ASW–5.'' The postcard will be date/time stamped and returned to the commenter.

Availability of NPRMs

An electronic copy of this document may be downloaded through the Internet at *http://www.regulations.gov.* Recently published rulemaking documents can also be accessed through the FAA's Web page at *http://www.faa.gov/airports_airtraffic/air_traffic/publications/airspace_amendments/.*

You may review the public docket containing the proposal, any comments received and any final disposition in person in the Dockets Office (see **ADDRESSES** section for address and phone number) between 9 a.m. and 5 p.m., Monday through Friday, except Federal holidays. An informal docket may also be examined during normal business hours at the office of the Central Service Center, 2601 Meacham Blvd., Fort Worth, TX 76137.

Persons interested in being placed on a mailing list for future NPRMs should contact the FAA's Office of Rulemaking (202) 267–9677, to request a copy of Advisory Circular No. 11–2A, Notice of Proposed Rulemaking Distribution System, which describes the application procedure.

The Proposal

This action proposes to amend Title 14, Code of Federal Regulations (14 CFR), Part 71 by modifying Class E airspace in the Alice, TX, area. Controlled airspace extending upward from 700 feet above the surface is being removed at Old Hoppe Place Airport, Aqua Dulce, TX, due to the cancellation of all standard instrument approach procedures at the airport. This action is necessary for the safety and management of IFR operations in the Alice, TX, area. Geographic coordinates for Alice International Airport, Orange Grove NALF, and the Kleberg County non-directional radio beacon (NDB) would also be updated to coincide with the FAA's aeronautical database.

Class E airspace areas are published in Paragraph 6005 of FAA Order 7400.9U, dated August 18, 2010, and effective September 15, 2010, which is incorporated by reference in 14 CFR 71.1. The Class E airspace designation listed in this document would be published subsequently in the Order.

The FAA has determined that this proposed regulation only involves an established body of technical regulations for which frequent and routine amendments are necessary to keep them operationally current. It, therefore, (1) is not a ''significant regulatory action'' under Executive Order 12866; (2) is not a ''significant rule'' under DOT Regulatory Policies and Procedures (44 FR 11034; February 26, 1979); and (3) does not warrant preparation of a Regulatory Evaluation as the anticipated impact is so minimal. Since this is a routine matter that will only affect air traffic procedures and air navigation, it is certified that this rule, when promulgated, will not have a significant economic impact on a substantial number of small entities under the criteria of the Regulatory Flexibility Act.

The FAA's authority to issue rules regarding aviation safety is found in Title 49 of the U.S. Code. Subtitle 1, Section 106 describes the authority of the FAA Administrator. Subtitle VII, Aviation Programs, describes in more detail the scope of the agency's authority. This rulemaking is promulgated under the authority described in Subtitle VII, Part A, Subpart I, Section 40103. Under that section, the FAA is charged with prescribing regulations to assign the use of airspace necessary to ensure the safety of aircraft and the efficient use of airspace. This regulation is within the scope of that authority as it would modify controlled airspace in the Alice, TX, area.

List of Subjects in 14 CFR Part 71

Airspace, Incorporation by reference, Navigation (air).

The Proposed Amendment

In consideration of the foregoing, the Federal Aviation Administration proposes to amend 14 CFR part 71 as follows:

PART 71—DESIGNATION OF CLASS A, B, C, D, AND E AIRSPACE AREAS; AIR TRAFFIC SERVICE ROUTES; AND REPORTING POINTS

1. The authority citation for part 71 continues to read as follows:

Authority: 49 U.S.C. 106(g); 40103, 40113, 40120; E.O. 10854, 24 FR 9565, 3 CFR, 1959–1963 Comp., p. 389.

§ 71.1 [Amended]

2. The incorporation by reference in 14 CFR 71.1 of FAA Order 7400.9U, Airspace Designations and Reporting Points, dated August 18, 2010, and effective September 15, 2010, is amended as follows:

Paragraph 6005 Class E airspace areas extending upward from 700 feet or more above the surface of the earth.

* * * * *

ASW TX E5 Alice, TX [Amended]

Alice International Airport, TX
(Lat. 27°44′27″ N., long. 98°01′37″ W.)
Orange Grove NALF, TX
(Lat. 27°53′49″ N., long. 98°02′37″ W.)
Navy Orange Grove TACAN
(Lat. 27°53′43″ N., long. 98°02′33″ W.)
Kingsville, Kleberg County Airport, TX
(Lat. 27°33′03″ N., long. 98°01′51″ W.)
Kleberg County NDB
(Lat. 27°36′23″ N., long. 98°05′09″ W.)

That airspace extending upward from 700 feet above the surface within a 7.5-mile radius of Alice International Airport, and within 2 miles each side of the 135° bearing from Alice International Airport extending from the 7.5-mile radius to 9.8 miles southeast of the airport, and within a 7.2-mile radius of Orange Grove NALF, and within 1.6 miles each side of the 129° radial of the Navy Orange Grove TACAN extending from the 7.2-mile radius of Orange Grove NALF to 11 miles southeast of Orange Grove NALF, and within 1.5 miles each side of the 320° radial of the Navy Orange Grove TACAN extending from the 7.2-mile radius of Orange Grove NALF to 9.7 miles northwest of Orange Grove NALF, and within a 6.5-mile radius of Kleberg County Airport, and within 4 miles east and 8 miles west of the 306° bearing extending from the Kleberg County NDB to 14.4 miles northwest of the airport, excluding that airspace within the Corpus Christi, TX, Class E airspace area.

Issued in Fort Worth, TX, on August 18, 2011.

Walter L. Tweedy,

Acting Manager, Operations Support Group, ATO Central Services Center.

[FR Doc. 2011–21913 Filed 8–25–11; 8:45 am]

BILLING CODE 4901–13–P

DEPARTMENT OF TRANSPORTATION

Federal Aviation Administration

14 CFR Part 71

[Docket No. FAA–2011–0845; Airspace Docket No. 11–ACE–19]

Proposed Amendment of Class E Airspace; Carroll, IA

AGENCY: Federal Aviation Administration (FAA), DOT.

ACTION: Notice of proposed rulemaking (NPRM).

SUMMARY: This action proposes to amend Class E airspace at Carroll, IA. Decommissioning of the Carroll non-directional beacon (NDB) at Arthur N. Neu Airport, Carroll, IA, has made this action necessary for the safety and management of Instrument Flight Rules (IFR) operations at the airport.

DATES: 0901 UTC. Comments must be received on or before October 11, 2011.

ADDRESSES: Send comments on this proposal to the U.S. Department of Transportation, Docket Operations, 1200 New Jersey Avenue, SE., West Building Ground Floor, Room W12–140, Washington, DC 20590–0001. You must identify the docket number FAA–2011–0845/Airspace Docket No. 11–ACE–19, at the beginning of your comments. You may also submit comments through the Internet at *http://www.regulations.gov.* You may review the public docket containing the proposal, any comments received, and any final disposition in person in the Dockets Office between 9 a.m. and 5 p.m., Monday through Friday, except Federal holidays. The Docket Office (telephone 1–800–647–5527), is on the ground floor of the building at the above address.

FOR FURTHER INFORMATION CONTACT: Scott Enander, Central Service Center, Operations Support Group, Federal Aviation Administration, Southwest Region, 2601 Meacham Blvd., Fort Worth, TX 76137; telephone: (817) 321–7716.

SUPPLEMENTARY INFORMATION:

Comments Invited

Interested parties are invited to participate in this proposed rulemaking by submitting such written data, views, or arguments, as they may desire. Comments that provide the factual basis supporting the views and suggestions presented are particularly helpful in developing reasoned regulatory decisions on the proposal. Comments are specifically invited on the overall regulatory, aeronautical, economic, environmental, and energy-related aspects of the proposal. Communications should identify both docket numbers and be submitted in triplicate to the address listed above. Commenters wishing the FAA to acknowledge receipt of their comments on this notice must submit with those comments a self-addressed, stamped postcard on which the following statement is made: ''Comments to Docket No. FAA–2011–0845/Airspace Docket No. 11–ACE–19.'' The postcard will be date/time stamped and returned to the commenter.

Availability of NPRMs

An electronic copy of this document may be downloaded through the Internet at *http://www.regulations.gov.* Recently published rulemaking documents can also be accessed through the FAA's Web page at *http://www.faa.gov/airports_airtraffic/air_traffic/publications/airspace_amendments/.*

You may review the public docket containing the proposal, any comments received, and any final disposition in person in the Dockets Office (see **ADDRESSES** section for address and phone number) between 9 a.m and 5 p.m., Monday through Friday, except Federal holidays. An informal docket may also be examined during normal business hours at the office of the Central Service Center, 2601 Meacham Blvd., Fort Worth, TX 76137.

Persons interested in being placed on a mailing list for future NPRMs should contact the FAA's Office of Rulemaking (202) 267–9677, to request a copy of Advisory Circular No. 11–2A, Notice of Proposed Rulemaking Distribution System, which describes the application procedure.

The Proposal

This action proposes to amend Title 14, Code of Federal Regulations (14 CFR), part 71 by modifying Class E airspace extending upward from 700 feet above the surface for standard instrument approach procedures at Arthur N. Neu Airport, Carroll, IA. Airspace reconfiguration is necessary due to the decommissioning of the Carroll NDB and cancellation of the NDB approach. Controlled airspace is necessary for the safety and management of IFR operations at the airport.

Class E airspace areas are published in Paragraph 6005 of FAA Order 7400.9U, dated August 18, 2010, and effective September 15, 2010, which is incorporated by reference in 14 CFR 71.1. The Class E airspace designation listed in this document would be published subsequently in the Order.

The FAA has determined that this proposed regulation only involves an established body of technical regulations for which frequent and routine amendments are necessary to keep them operationally current. It, therefore, (1) is not a ''significant regulatory action'' under Executive Order 12866; (2) is not a ''significant rule'' under DOT Regulatory Policies and Procedures (44 FR 11034; February 26, 1979); and (3) does not warrant preparation of a Regulatory Evaluation as the anticipated impact is so minimal.

Since this is a routine matter that will only affect air traffic procedures and air navigation, it is certified that this rule, when promulgated, will not have a significant economic impact on a substantial number of small entities under the criteria of the Regulatory Flexibility Act.

The FAA's authority to issue rules regarding aviation safety is found in Title 49 of the U.S. Code. Subtitle 1, Section 106 describes the authority of the FAA Administrator. Subtitle VII, Aviation Programs, describes in more detail the scope of the agency's authority. This rulemaking is promulgated under the authority described in subtitle VII, part A, subpart I, Section 40103. Under that section, the FAA is charged with prescribing regulations to assign the use of airspace necessary to ensure the safety of aircraft and the efficient use of airspace. This regulation is within the scope of that authority as it would modify controlled airspace at Arthur N. Neu Airport, Carroll, IA.

List of Subjects in 14 CFR Part 71

Airspace, Incorporation by reference, Navigation (air).

The Proposed Amendment

In consideration of the foregoing, the Federal Aviation Administration proposes to amend 14 CFR part 71 as follows:

PART 71—DESIGNATION OF CLASS A, B, C, D, AND E AIRSPACE AREAS; AIR TRAFFIC SERVICE ROUTES; AND REPORTING POINTS

1. The authority citation for part 71 continues to read as follows:

Authority: 49 U.S.C. 106(g); 40103, 40113, 40120; E.O. 10854, 24 FR 9565, 3 CFR, 1959–1963 Comp., p. 389.

§ 71.1 [Amended]

2. The incorporation by reference in 14 CFR 71.1 of FAA Order 7400.9U, Airspace Designations and Reporting Points, dated August 18, 2010, and effective September 15, 2010, is amended as follows:

Paragraph 6005 Class E airspace areas extending upward from 700 feet or more above the surface of the earth.

* * * * *

ACE IA E5 Carroll, IA [Amended]

Arthur N. Neu Airport, IA
(Lat. 42°02′46″ N., long. 94°47′20″ W.)

That airspace extending upward from 700 feet above the surface within a 6.5-mile radius of Arthur N. Neu Airport.

Issued in Fort Worth, TX, on August 17, 2011.

Walter L. Tweedy,

Acting Manager, Operations Support Group, ATO Central Service Center.

[FR Doc. 2011–21915 Filed 8–25–11; 8:45 am]

BILLING CODE 4901–13–P

DEPARTMENT OF TRANSPORTATION

Federal Aviation Administration

14 CFR Part 71

[Docket No. FAA–2011–0608; Airspace Docket No. 11–ASW–7]

Proposed Amendment of Class E Airspace; Winters, TX

AGENCY: Federal Aviation Administration (FAA), DOT.

ACTION: Notice of proposed rulemaking (NPRM).

SUMMARY: This action proposes to amend Class E airspace at Winters, TX. Decommissioning of the Winters RBN and cancellation of the non-directional radio beacon (NDB) Standard Instrument Approach Procedures (SIAP), as well as the addition of new area navigation (RNAV) SIAPs, have made this action necessary to enhance the safety and management of Instrument Flight Rules (IFR) operations at Winters Municipal Airport.

DATES: 0901 UTC. Comments must be received on or before October 11, 2011.

ADDRESSES: Send comments on this proposal to the U.S. Department of Transportation, Docket Operations, 1200 New Jersey Avenue, SE., West Building Ground Floor, Room W12–140, Washington, DC 20590–0001. You must identify the docket number FAA–2011–0608/Airspace Docket No. 11–ASW–7, at the beginning of your comments. You may also submit comments through the Internet at *http://www.regulations.gov.* You may review the public docket containing the proposal, any comments received, and any final disposition in person in the Dockets Office between 9 a.m. and 5 p.m., Monday through Friday, except Federal holidays. The Docket Office (telephone 1–800–647–5527), is on the ground floor of the building at the above address.

FOR FURTHER INFORMATION CONTACT: Scott Enander, Central Service Center, Operations Support Group, Federal Aviation Administration, Southwest Region, 2601 Meacham Blvd., Fort Worth, TX 76137; telephone: (817) 321–7716.

SUPPLEMENTARY INFORMATION:

Comments Invited

Interested parties are invited to participate in this proposed rulemaking by submitting such written data, views, or arguments, as they may desire. Comments that provide the factual basis supporting the views and suggestions presented are particularly helpful in developing reasoned regulatory decisions on the proposal. Comments are specifically invited on the overall regulatory, aeronautical, economic, environmental, and energy-related aspects of the proposal. Communications should identify both docket numbers and be submitted in triplicate to the address listed above. Commenters wishing the FAA to acknowledge receipt of their comments on this notice must submit with those comments a self-addressed, stamped postcard on which the following statement is made: ''Comments to Docket No. FAA–2011–0608/Airspace Docket No. 11–ASW–7.'' The postcard will be date/time stamped and returned to the commenter.

Availability of NPRMs

An electronic copy of this document may be downloaded through the Internet at *http://www.regulations.gov.* Recently published rulemaking documents can also be accessed through the FAA's Web page at *http://www.faa.gov/airports_airtraffic/air_traffic/publications/airspace_amendments/.*

You may review the public docket containing the proposal, any comments received and any final disposition in person in the Dockets Office (see **ADDRESSES** section for address and phone number) between 9 a.m. and 5 p.m., Monday through Friday, except Federal holidays. An informal docket may also be examined during normal business hours at the office of the Central Service Center, 2601 Meacham Blvd, Fort Worth, TX 76137.

Persons interested in being placed on a mailing list for future NPRMs should contact the FAA's Office of Rulemaking (202) 267–9677, to request a copy of Advisory Circular No. 11–2A, Notice of Proposed Rulemaking Distribution System, which describes the application procedure.

The Proposal

This action proposes to amend Title 14, Code of Federal Regulations (14 CFR), part 71 by amending Class E airspace extending upward from 700 feet above the surface at Winters Municipal Airport, Winters, TX. Decommissioning of the Winters RBN and cancellation of the NDB standard

instrument approach procedure, as well as creation of new RNAV standard instrument approach procedures, have made this amendment necessary for the safety and management of IFR operations at the airport.

Class E airspace areas are published in Paragraph 6005 of FAA Order 7400.9U, dated August 18, 2010 and effective September 15, 2010, which is incorporated by reference in 14 CFR 71.1. The Class E airspace designation listed in this document would be published subsequently in the Order.

The FAA has determined that this proposed regulation only involves an established body of technical regulations for which frequent and routine amendments are necessary to keep them operationally current. It, therefore, (1) is not a ''significant regulatory action'' under Executive Order 12866; (2) is not a ''significant rule'' under DOT Regulatory Policies and Procedures (44 FR 11034; February 26, 1979); and (3) does not warrant preparation of a Regulatory Evaluation as the anticipated impact is so minimal. Since this is a routine matter that will only affect air traffic procedures and air navigation, it is certified that this rule, when promulgated, will not have a significant economic impact on a substantial number of small entities under the criteria of the Regulatory Flexibility Act.

The FAA's authority to issue rules regarding aviation safety is found in Title 49 of the U.S. Code. Subtitle 1, Section 106 describes the authority of the FAA Administrator. Subtitle VII, Aviation Programs, describes in more detail the scope of the agency's authority. This rulemaking is promulgated under the authority described in Subtitle VII, part A, subpart I, Section 40103. Under that section, the FAA is charged with prescribing regulations to assign the use of airspace necessary to ensure the safety of aircraft and the efficient use of airspace. This regulation is within the scope of that authority as it would amend controlled airspace at Winters Municipal Airport, Winters, TX.

List of Subjects in 14 CFR Part 71

Airspace, Incorporation by reference, Navigation (air).

The Proposed Amendment

In consideration of the foregoing, the Federal Aviation Administration proposes to amend 14 CFR part 71 as follows:

PART 71—DESIGNATION OF CLASS A, B, C, D, AND E AIRSPACE AREAS; AIR TRAFFIC SERVICE ROUTES; AND REPORTING POINTS

1. The authority citation for part 71 continues to read as follows:

Authority: 49 U.S.C. 106(g); 40103, 40113, 40120; E.O. 10854, 24 FR 9565, 3 CFR, 1959–1963 Comp., p. 389.

§ 71.1 [Amended]

2. The incorporation by reference in 14 CFR 71.1 of FAA Order 7400.9U, Airspace Designations and Reporting Points, dated August 18, 2010, and effective September 15, 2010, is amended as follows:

Paragraph 6005 Class E airspace areas extending upward from 700 feet or more above the surface of the earth.

* * * * *

ASW TX E5 Winters, TX [Amended]

Winters Municipal Airport, TX
(Lat. 31°56′50″ N., long. 99°59′09″ W.)

That airspace extending upward from 700 feet above the surface within a 6.3-mile radius of Winters Municipal Airport, and within 2 miles each side of the 000° bearing from the airport extending from the 6.3-mile radius to 9.2 miles north of the airport.

Issued in Fort Worth, TX, on August 17, 2011.

Walter L. Tweedy,

Acting Manager, Operations Support Group, ATO Central Service Center.

[FR Doc. 2011–21782 Filed 8–25–11; 8:45 am]

BILLING CODE 4901–13–P

DEPARTMENT OF TRANSPORTATION

Federal Aviation Administration

14 CFR Part 71

[Docket No. FAA–2011–0851; Airspace Docket No. 11–ASW–10]

Proposed Amendment of Class E Airspace; Ardmore, OK

AGENCY: Federal Aviation Administration (FAA), DOT.

ACTION: Notice of proposed rulemaking (NPRM).

SUMMARY: This action proposes to amend Class E airspace at Ardmore, OK, to accommodate new Standard Instrument Approach Procedures (SIAP) created by the decommissioning of the Arbuckle non-directional radio beacon (NDB) and cancellation of the NDB approach at Ardmore Municipal Airport. The FAA is taking this action to enhance the safety and management of Instrument Flight Rules (IFR) operations for SIAPs at the airport. This action also would update the geographic coordinates to coincide with the FAA's aeronautical database.

DATES: 0901 UTC. Comments must be received on or before October 11, 2011.

ADDRESSES: Send comments on this proposal to the U.S. Department of Transportation, Docket Operations, 1200 New Jersey Avenue, SE., West Building Ground Floor, Room W12–140, Washington, DC 20590–0001. You must identify the docket number FAA–2011–0851/Airspace Docket No. 11–ASW–10, at the beginning of your comments. You may also submit comments through the Internet at *http://www.regulations.gov*. You may review the public docket containing the proposal, any comments received, and any final disposition in person in the Dockets Office between 9 a.m. and 5 p.m., Monday through Friday, except Federal holidays. The Docket Office (telephone 1–800–647–5527), is on the ground floor of the building at the above address.

FOR FURTHER INFORMATION CONTACT: Scott Enander, Central Service Center, Operations Support Group, Federal Aviation Administration, Southwest Region, 2601 Meacham Blvd., Fort Worth, TX 76137; telephone: (817) 321–7716.

SUPPLEMENTARY INFORMATION:

Comments Invited

Interested parties are invited to participate in this proposed rulemaking by submitting such written data, views, or arguments, as they may desire. Comments that provide the factual basis supporting the views and suggestions presented are particularly helpful in developing reasoned regulatory decisions on the proposal. Comments are specifically invited on the overall regulatory, aeronautical, economic, environmental, and energy-related aspects of the proposal. Communications should identify both docket numbers and be submitted in triplicate to the address listed above. Commenters wishing the FAA to acknowledge receipt of their comments on this notice must submit with those comments a self-addressed, stamped postcard on which the following statement is made: ''Comments to Docket No. FAA–2011–0851/Airspace Docket No. 11–ASW–10.'' The postcard will be date/time stamped and returned to the commenter.

Availability of NPRMs

An electronic copy of this document may be downloaded through the Internet at *http://www.regulations.gov*. Recently published rulemaking documents can also be accessed through the FAA's Web page at *http://*

www.faa.gov/airports_airtraffic/air_traffic/publications/airspace_amendments/.

You may review the public docket containing the proposal, any comments received and any final disposition in person in the Dockets Office (see **ADDRESSES** section for address and phone number) between 9 a.m. and 5 p.m., Monday through Friday, except Federal holidays. An informal docket may also be examined during normal business hours at the office of the Central Service Center, 2601 Meacham Blvd., Fort Worth, TX 76137.

Persons interested in being placed on a mailing list for future NPRMs should contact the FAA's Office of Rulemaking (202) 267–9677, to request a copy of Advisory Circular No. 11–2A, Notice of Proposed Rulemaking Distribution System, which describes the application procedure.

The Proposal

This action proposes to amend Title 14, Code of Federal Regulations (14 CFR), Part 71 by amending Class E airspace designated as an extension to a Class D surface area, and Class E airspace extending upward from 700 feet above the surface, to accommodate new standard instrument approach procedures at Ardmore Municipal Airport, Ardmore, OK. Decommissioning of the Arbuckle NDB and cancellation of the NDB approach at Ardmore Downtown Executive Airport has made it necessary for airspace reconfiguration for the safety and management of IFR operations at the airport. Also, this action would update the geographic coordinates to coincide with the FAA's aeronautical database.

Class E airspace areas are published in Paragraphs 6004 and 6005, respectively, of FAA Order 7400.9U, dated August 18, 2010 and effective September 15, 2010, which is incorporated by reference in 14 CFR 71.1. The Class E airspace designations listed in this document would be published subsequently in the Order.

The FAA has determined that this proposed regulation only involves an established body of technical regulations for which frequent and routine amendments are necessary to keep them operationally current. It, therefore, (1) Is not a ''significant regulatory action'' under Executive Order 12866; (2) is not a ''significant rule'' under DOT Regulatory Policies and Procedures (44 FR 11034; February 26, 1979); and (3) does not warrant preparation of a Regulatory Evaluation as the anticipated impact is so minimal. Since this is a routine matter that will only affect air traffic procedures and air navigation, it is certified that this rule, when promulgated, will not have a significant economic impact on a substantial number of small entities under the criteria of the Regulatory Flexibility Act.

The FAA's authority to issue rules regarding aviation safety is found in Title 49 of the U.S. Code. Subtitle 1, Section 106 describes the authority of the FAA Administrator. Subtitle VII, Aviation Programs, describes in more detail the scope of the agency's authority. This rulemaking is promulgated under the authority described in Subtitle VII, Part A, Subpart I, Section 40103. Under that section, the FAA is charged with prescribing regulations to assign the use of airspace necessary to ensure the safety of aircraft and the efficient use of airspace. This regulation is within the scope of that authority as it would amend controlled airspace at Ardmore Municipal Airport, Ardmore, OK.

List of Subjects in 14 CFR Part 71

Airspace, Incorporation by reference, Navigation (air).

The Proposed Amendment

In consideration of the foregoing, the Federal Aviation Administration proposes to amend 14 CFR part 71 as follows:

PART 71—DESIGNATION OF CLASS A, B, C, D, AND E AIRSPACE AREAS; AIR TRAFFIC SERVICE ROUTES; AND REPORTING POINTS

1. The authority citation for part 71 continues to read as follows:

Authority: 49 U.S.C. 106(g); 40103, 40113, 40120; E.O. 10854, 24 FR 9565, 3 CFR, 1959–1963 Comp., p. 389.

§ 71.1 [Amended]

2. The incorporation by reference in 14 CFR 71.1 of FAA Order 7400.9U, Airspace Designations and Reporting Points, dated August 18, 2010, and effective September 15, 2010, is amended as follows:

Paragraph 6004 Class E airspace areas designated as an extension to a Class D surface area.

* * * * *

ASW OK E4 Ardmore, OK [Amended]

Ardmore Municipal Airport, OK
(Lat. 34°18′15″ N., long. 97°01′14″ W.)
Ardmore VORTAC
(Lat. 34°12′42″ N., long. 97°10′06″ W.)

That airspace extending upward from the surface within 1.3 miles each side of the Ardmore VORTAC 056° radial extending from the 4.2-mile radius of Ardmore Municipal Airport to 8.5 miles southwest of the airport, and within 1 mile each side of the 315° bearing from Ardmore Municipal Airport extending from the 4.2-mile radius of the airport to 5.3 miles northwest of the airport. This Class E airspace area is effective during the specific dates and times established in advance by a Notice to Airmen. The effective date and time will thereafter be continuously published in the Airport/Facility Directory.

Paragraph 6005 Class E airspace areas extending upward from 700 feet or more above the surface of the earth.

* * * * *

ASW OK E5 Ardmore, OK [Amended]

Ardmore Municipal Airport, OK
(Lat. 34°18′15″ N., long. 97°01′14″ W.)
Ardmore VORTAC
(Lat. 34°12′42″ N., long. 97°10′06″ W.)
Ardmore Downtown Executive Airport, OK
(Lat. 34°08′49″ N., long. 97°07′22″ W.)

That airspace extending upward from the 700 feet above the surface within a 6.8-mile radius of Ardmore Municipal Airport, and within 1.1 miles each side of the 315° bearing from the airport extending from the 6.8-mile radius to 6.9 miles northwest of the airport, and within a 6.5 mile radius of Ardmore Downtown Executive Airport, and within 8 miles west and 4 miles east of the 329° radial of the Ardmore VORTAC extending from the 6.5-mile radius to 16 miles northwest of the VORTAC.

Issued in Fort Worth, TX, on August 17, 2011.

Walter L. Tweedy,

Acting Manager, Operations Support Group, ATO Central Service Center.

[FR Doc. 2011–21809 Filed 8–25–11; 8:45 am]

BILLING CODE 4901–13–P

DEPARTMENT OF TRANSPORTATION

Federal Aviation Administration

14 CFR Part 71

[Docket No. FAA–2011–0846; Airspace Docket No. 11–ACE–18]

Proposed Amendment of Class E Airspace; Greenfield, IA

AGENCY: Federal Aviation Administration (FAA), DOT.

ACTION: Notice of proposed rulemaking (NPRM).

SUMMARY: This action proposes to amend Class E airspace at Greenfield, IA. Decommissioning of the Greenfield non-directional beacon (NDB) at Greenfield Municipal Airport, Greenfield, IA, has made this action necessary for the safety and management of Instrument Flight Rules (IFR) operations at Greenfield Municipal Airport.

DATES: 0901 UTC. Comments must be received on or before October 11, 2011.

ADDRESSES: Send comments on this proposal to the U.S. Department of Transportation, Docket Operations, 1200 New Jersey Avenue, SE., West Building Ground Floor, Room W12–140, Washington, DC 20590–0001. You must identify the docket number FAA–2011–0846/Airspace Docket No. 11–ACE–18, at the beginning of your comments. You may also submit comments through the Internet at *http://www.regulations.gov.* You may review the public docket containing the proposal, any comments received, and any final disposition in person in the Dockets Office between 9 a.m. and 5 p.m., Monday through Friday, except Federal holidays. The Docket Office (telephone 1–800–647–5527), is on the ground floor of the building at the above address.

FOR FURTHER INFORMATION CONTACT: Scott Enander, Central Service Center, Operations Support Group, Federal Aviation Administration, Southwest Region, 2601 Meacham Blvd., Fort Worth, TX 76137; telephone: (817) 321–7716.

SUPPLEMENTARY INFORMATION:

Comments Invited

Interested parties are invited to participate in this proposed rulemaking by submitting such written data, views, or arguments, as they may desire. Comments that provide the factual basis supporting the views and suggestions presented are particularly helpful in developing reasoned regulatory decisions on the proposal. Comments are specifically invited on the overall regulatory, aeronautical, economic, environmental, and energy-related aspects of the proposal. Communications should identify both docket numbers and be submitted in triplicate to the address listed above. Commenters wishing the FAA to acknowledge receipt of their comments on this notice must submit with those comments a self-addressed, stamped postcard on which the following statement is made: ''Comments to Docket No. FAA–2011–0846/Airspace Docket No. 11–ACE–18.'' The postcard will be date/time stamped and returned to the commenter.

Availability of NPRMs

An electronic copy of this document may be downloaded through the Internet at *http://www.regulations.gov.* Recently published rulemaking documents can also be accessed through the FAA's Web page at *http://www.faa.gov/airports_airtraffic/air_traffic/publications/airspace_amendments/.*

You may review the public docket containing the proposal, any comments received, and any final disposition in person in the Dockets Office (see **ADDRESSES** section for address and phone number) between 9 a.m. and 5 p.m., Monday through Friday, except Federal holidays. An informal docket may also be examined during normal business hours at the office of the Central Service Center, 2601 Meacham Blvd, Fort Worth, TX 76137.

Persons interested in being placed on a mailing list for future NPRMs should contact the FAA's Office of Rulemaking (202) 267–9677, to request a copy of Advisory Circular No. 11–2A, Notice of Proposed Rulemaking Distribution System, which describes the application procedure.

The Proposal

This action proposes to amend Title 14, Code of Federal Regulations (14 CFR), part 71 by modifying Class E airspace extending upward from 700 feet above the surface for standard instrument approach procedures at Greenfield Municipal Airport Airport, Greenfield, IA. Airspace reconfiguration is necessary due to the decommissioning of the Greenfield NDB and the cancellation of the NDB approach. Controlled airspace is necessary for the safety and management of IFR operations at the airport.

Class E airspace areas are published in Paragraph 6005 of FAA Order 7400.9U, dated August 18, 2010, and effective September 15, 2010, which is incorporated by reference in 14 CFR 71.1. The Class E airspace designation listed in this document would be published subsequently in the Order.

The FAA has determined that this proposed regulation only involves an established body of technical regulations for which frequent and routine amendments are necessary to keep them operationally current. It, therefore, (1) is not a ''significant regulatory action'' under Executive Order 12866; (2) is not a ''significant rule'' under DOT Regulatory Policies and Procedures (44 FR 11034; February 26, 1979); and (3) does not warrant preparation of a Regulatory Evaluation as the anticipated impact is so minimal. Since this is a routine matter that will only affect air traffic procedures and air navigation, it is certified that this rule, when promulgated, will not have a significant economic impact on a substantial number of small entities under the criteria of the Regulatory Flexibility Act.

The FAA's authority to issue rules regarding aviation safety is found in Title 49 of the U.S. Code. Subtitle 1, Section 106 describes the authority of the FAA Administrator. Subtitle VII, Aviation Programs, describes in more detail the scope of the agency's authority. This rulemaking is promulgated under the authority described in Subtitle VII, Part A, Subpart I, Section 40103. Under that section, the FAA is charged with prescribing regulations to assign the use of airspace necessary to ensure the safety of aircraft and the efficient use of airspace. This regulation is within the scope of that authority as it would modify controlled airspace at Greenfield Municipal Airport Airport, Greenfield, IA.

List of Subjects in 14 CFR Part 71

Airspace, Incorporation by reference, Navigation (air).

The Proposed Amendment

In consideration of the foregoing, the Federal Aviation Administration proposes to amend 14 CFR part 71 as follows:

PART 71—DESIGNATION OF CLASS A, B, C, D, AND E AIRSPACE AREAS; AIR TRAFFIC SERVICE ROUTES; AND REPORTING POINTS

1. The authority citation for part 71 continues to read as follows:

Authority: 49 U.S.C. 106(g); 40103, 40113, 40120; E.O. 10854, 24 FR 9565, 3 CFR, 1959–1963 Comp., p. 389.

§ 71.1 [Amended]

2. The incorporation by reference in 14 CFR 71.1 of FAA Order 7400.9U, Airspace Designations and Reporting Points, dated August 18, 2010, and effective September 15, 2010, is amended as follows:

Paragraph 6005 Class E airspace areas extending upward from 700 feet or more above the surface of the earth.

* * * * *

ACE IA E5 Greenfield, IA [Amended]

Greenfield Municipal Airport, IA
(Lat. 41°19′38″ N., long. 94°26′43″ W.)

That airspace extending upward from 700 feet above the surface within a 6.4-mile radius of Greenfield Municipal Airport.

Issued in Fort Worth, TX, on August 17, 2011.

Walter L. Tweedy,

Acting Manager, Operations Support Group, ATO Central Service Center.

[FR Doc. 2011–21920 Filed 8–25–11; 8:45 am]

BILLING CODE 4901–13–P

DEPARTMENT OF TRANSPORTATION

Federal Aviation Administration

14 CFR Part 71

[Docket No. FAA–2011–0830; Airspace Docket No. 11–ACE–16]

Proposed Amendment of Class E Airspace; Centerville, IA

AGENCY: Federal Aviation Administration (FAA), DOT.

ACTION: Notice of proposed rulemaking (NPRM).

SUMMARY: This action proposes to amend Class E airspace at Centerville, IA. Decommissioning of the Centerville non directional beacon (NDB) and cancellation of the NDB approach at Centerville Municipal Airport, as well as the addition of a new COPTER RNAV standard instrument approach procedure (SIAP) at Mercy Medical Center-Centerville Heliport, have made this action necessary to enhance the safety and management of Instrument Flight Rules (IFR) operations within the National Airspace System.

DATES: 0901 UTC. Comments must be received on or before October 11, 2011.

ADDRESSES: Send comments on this proposal to the U.S. Department of Transportation, Docket Operations, 1200 New Jersey Avenue, SE., West Building Ground Floor, Room W12–140, Washington, DC 20590–0001. You must identify the docket number FAA–2011–0830/Airspace Docket No. 11–ACE–16, at the beginning of your comments. You may also submit comments through the Internet at *http://www.regulations.gov.* You may review the public docket containing the proposal, any comments received, and any final disposition in person in the Dockets Office between 9 a.m. and 5 p.m., Monday through Friday, except Federal holidays. The Docket Office (telephone 1–800–647–5527), is on the ground floor of the building at the above address.

FOR FURTHER INFORMATION CONTACT: Scott Enander, Central Service Center, Operations Support Group, Federal Aviation Administration, Southwest Region, 2601 Meacham Blvd., Fort Worth, TX 76137; telephone: (817) 321–7716.

SUPPLEMENTARY INFORMATION:

Comments Invited

Interested parties are invited to participate in this proposed rulemaking by submitting such written data, views, or arguments, as they may desire. Comments that provide the factual basis supporting the views and suggestions presented are particularly helpful in developing reasoned regulatory decisions on the proposal. Comments are specifically invited on the overall regulatory, aeronautical, economic, environmental, and energy-related aspects of the proposal. Communications should identify both docket numbers and be submitted in triplicate to the address listed above. Commenters wishing the FAA to acknowledge receipt of their comments on this notice must submit with those comments a self-addressed, stamped postcard on which the following statement is made: ''Comments to Docket No. FAA–2011–0830/Airspace Docket No. 11–ACE–16.'' The postcard will be date/time stamped and returned to the commenter.

Availability of NPRMs

An electronic copy of this document may be downloaded through the Internet at *http://www.regulations.gov.* Recently published rulemaking documents can also be accessed through the FAA's Web page at *http://www.faa.gov/airports_airtraffic/air_traffic/publications/airspace_amendments/.*

You may review the public docket containing the proposal, any comments received and any final disposition in person in the Dockets Office (see **ADDRESSES** section for address and phone number) between 9 a.m. and 5 p.m., Monday through Friday, except Federal holidays. An informal docket may also be examined during normal business hours at the office of the Central Service Center, 2601 Meacham Blvd., Fort Worth, TX 76137.

Persons interested in being placed on a mailing list for future NPRMs should contact the FAA's Office of Rulemaking (202) 267–9677, to request a copy of Advisory Circular No. 11–2A, Notice of Proposed Rulemaking Distribution System, which describes the application procedure.

The Proposal

This action proposes to amend Title 14, Code of Federal Regulations (14 CFR), Part 71 by amending Class E airspace extending upward from 700 feet above the surface at Centerville Municipal Airport, Centerville, IA. Decommissioning of the Centerville NDB and cancellation of the NDB approach has made it necessary to reconfigure the airspace. Also, new COPTER RNAV standard instrument approach procedures at Mercy Medical Center-Centerville Heliport, has made this amendment necessary for the safety and management of IFR operations in the Centerville, IA, area.

Class E airspace areas are published in Paragraph 6005 of FAA Order 7400.9U, dated August 18, 2010 and effective September 15, 2010, which is incorporated by reference in 14 CFR 71.1. The Class E airspace designation listed in this document would be published subsequently in the Order.

The FAA has determined that this proposed regulation only involves an established body of technical regulations for which frequent and routine amendments are necessary to keep them operationally current. It, therefore, (1) is not a ''significant regulatory action'' under Executive Order 12866; (2) is not a ''significant rule'' under DOT Regulatory Policies and Procedures (44 FR 11034; February 26, 1979); and (3) does not warrant preparation of a Regulatory Evaluation as the anticipated impact is so minimal. Since this is a routine matter that will only affect air traffic procedures and air navigation, it is certified that this rule, when promulgated, will not have a significant economic impact on a substantial number of small entities under the criteria of the Regulatory Flexibility Act.

The FAA's authority to issue rules regarding aviation safety is found in Title 49 of the U.S. Code. Subtitle 1, Section 106 describes the authority of the FAA Administrator. Subtitle VII, Aviation Programs, describes in more detail the scope of the agency's authority. This rulemaking is promulgated under the authority described in Subtitle VII, Part A, Subpart I, Section 40103. Under that section, the FAA is charged with prescribing regulations to assign the use of airspace necessary to ensure the safety of aircraft and the efficient use of airspace. This regulation is within the scope of that authority as it would amend controlled airspace in the Centerville, IA, area.

List of Subjects in 14 CFR Part 71

Airspace, Incorporation by reference, Navigation (air).

The Proposed Amendment

In consideration of the foregoing, the Federal Aviation Administration proposes to amend 14 CFR part 71 as follows:

PART 71—DESIGNATION OF CLASS A, B, C, D, AND E AIRSPACE AREAS; AIR TRAFFIC SERVICE ROUTES; AND REPORTING POINTS

1. The authority citation for part 71 continues to read as follows:

Authority: 49 U.S.C. 106(g); 40103, 40113, 40120; E.O. 10854, 24 FR 9565, 3 CFR, 1959–1963 Comp., p. 389.

§ 71.1 [Amended]

2. The incorporation by reference in 14 CFR 71.1 of FAA Order 7400.9U, Airspace Designations and Reporting Points, dated August 18, 2010, and effective September 15, 2010, is amended as follows:

Paragraph 6005 Class E airspace areas extending upward from 700 feet or more above the surface of the earth.

* * * * *

ACE IA E5 Centerville, IA [Amended]

Centerville Municipal Airport, IA
(Lat. 40°41′04″ N., long. 92°52′04″ W.)
Mercy Medical Center—Centerville Heliport, IA
(Lat. 40°45′23″ N., long. 92°51′25″ W.)

That airspace extending upward from 700 feet above the surface within a 6.5-mile radius of Centerville Municipal Airport, and within a 6.5-mile radius of Mercy Medical Center-Centerville Heliport.

Issued in Fort Worth, TX, on August 17, 2011.

Walter L. Tweedy,

Acting Manager, Operations Support Group, ATO Central Service Center.

[FR Doc. 2011–21919 Filed 8–25–11; 8:45 am]

BILLING CODE 4901–13–P

DEPARTMENT OF TRANSPORTATION

Federal Aviation Administration

14 CFR Part 71

[Docket No. FAA–2011–0497; Airspace Docket No. 11–ASW–4]

Proposed Establishment of Class E Airspace; Nashville, AR

AGENCY: Federal Aviation Administration (FAA), DOT.

ACTION: Notice of proposed rulemaking (NPRM).

SUMMARY: This action proposes to establish Class E airspace at Nashville, AR. Controlled airspace is necessary to accommodate new Standard Instrument Approach Procedures (SIAP) at Howard County Airport. The FAA is taking this action to enhance the safety and management of Instrument Flight Rules (IFR) operations for SIAPs at the airport.

DATES: 0901 UTC. Comments must be received on or before October 11, 2011.

ADDRESSES: Send comments on this proposal to the U.S. Department of Transportation, Docket Operations, 1200 New Jersey Avenue, SE., West Building Ground Floor, Room W12–140, Washington, DC 20590–0001. You must identify the docket number FAA–2011–0497/Airspace Docket No. 11–ASW–4, at the beginning of your comments. You may also submit comments through the Internet at *http://www.regulations.gov.* You may review the public docket containing the proposal, any comments received, and any final disposition in person in the Dockets Office between 9 a.m. and 5 p.m., Monday through Friday, except Federal holidays. The Docket Office (telephone 1–800–647–5527), is on the ground floor of the building at the above address.

FOR FURTHER INFORMATION CONTACT: Scott Enander, Central Service Center, Operations Support Group, Federal Aviation Administration, Southwest Region, 2601 Meacham Blvd., Fort Worth, TX 76137; telephone: (817) 321–7716.

SUPPLEMENTARY INFORMATION:

Comments Invited

Interested parties are invited to participate in this proposed rulemaking by submitting such written data, views, or arguments, as they may desire. Comments that provide the factual basis supporting the views and suggestions presented are particularly helpful in developing reasoned regulatory decisions on the proposal. Comments are specifically invited on the overall regulatory, aeronautical, economic, environmental, and energy-related aspects of the proposal. Communications should identify both docket numbers and be submitted in triplicate to the address listed above. Commenters wishing the FAA to acknowledge receipt of their comments on this notice must submit with those comments a self-addressed, stamped postcard on which the following statement is made: ''Comments to Docket No. FAA–2011–0497/Airspace Docket No. 11–ASW–4.'' The postcard will be date/time stamped and returned to the commenter.

Availability of NPRMs

An electronic copy of this document may be downloaded through the Internet at *http://www.regulations.gov.* Recently published rulemaking documents can also be accessed through the FAA's Web page at *http://www.faa.gov/airports_airtraffic/air_traffic/publications/airspace_amendments/.*

You may review the public docket containing the proposal, any comments received and any final disposition in person in the Dockets Office (see **ADDRESSES** section for address and phone number) between 9 a.m. and 5 p.m., Monday through Friday, except Federal holidays. An informal docket may also be examined during normal business hours at the office of the Central Service Center, 2601 Meacham Blvd., Fort Worth, TX 76137.

Persons interested in being placed on a mailing list for future NPRMs should contact the FAA's Office of Rulemaking (202) 267–9677, to request a copy of Advisory Circular No. 11–2A, Notice of Proposed Rulemaking Distribution System, which describes the application procedure.

The Proposal

This action proposes to amend Title 14, Code of Federal Regulations (14 CFR), Part 71 by establishing Class E airspace extending upward from 700 feet above the surface for new standard instrument approach procedures at Howard County Airport, Nashville, AR. Controlled airspace is needed for the safety and management of IFR operations at the airport.

Class E airspace areas are published in Paragraph 6005 of FAA Order 7400.9U, dated August 18, 2010 and effective September 15, 2010, which is incorporated by reference in 14 CFR 71.1. The Class E airspace designation listed in this document would be published subsequently in the Order.

The FAA has determined that this proposed regulation only involves an established body of technical regulations for which frequent and routine amendments are necessary to keep them operationally current. It, therefore, (1) Is not a ''significant regulatory action'' under Executive Order 12866; (2) is not a ''significant rule'' under DOT Regulatory Policies and Procedures (44 FR 11034; February 26, 1979); and (3) does not warrant preparation of a Regulatory Evaluation as the anticipated impact is so minimal. Since this is a routine matter that will only affect air traffic procedures and air navigation, it is certified that this rule, when promulgated, will not have a significant economic impact on a substantial number of small entities under the criteria of the Regulatory Flexibility Act.

The FAA's authority to issue rules regarding aviation safety is found in Title 49 of the U.S. Code. Subtitle 1, Section 106 describes the authority of the FAA Administrator. Subtitle VII, Aviation Programs, describes in more detail the scope of the agency's authority. This rulemaking is promulgated under the authority described in Subtitle VII, Part A, Subpart I, Section 40103. Under that section, the FAA is charged with prescribing regulations to assign the use of airspace necessary to ensure the safety of aircraft and the efficient use of

airspace. This regulation is within the scope of that authority as it would establish controlled airspace at Howard County Airport, Nashville, AR.

List of Subjects in 14 CFR Part 71

Airspace, Incorporation by reference, Navigation (air).

The Proposed Amendment

In consideration of the foregoing, the Federal Aviation Administration proposes to amend 14 CFR part 71 as follows:

PART 71—DESIGNATION OF CLASS A, B, C, D, AND E AIRSPACE AREAS; AIR TRAFFIC SERVICE ROUTES; AND REPORTING POINTS

1. The authority citation for part 71 continues to read as follows:

Authority: 49 U.S.C. 106(g); 40103, 40113, 40120; E.O. 10854, 24 FR 9565, 3 CFR, 1959–1963 Comp., p. 389.

§ 71.1 [Amended]

2. The incorporation by reference in 14 CFR 71.1 of FAA Order 7400.9U, Airspace Designations and Reporting Points, dated August 18, 2010, and effective September 15, 2010, is amended as follows:

Paragraph 6005 Class E airspace areas extending upward from 700 feet or more above the surface of the earth.

* * * * *

ASW AR E5 Nashville, AR [New]

Howard County Airport, AR
(Lat. 33°59′48″ N., long. 93°50′18″ W.)

That airspace extending upward from 700 feet above the surface within a 6.4-mile radius of Howard County Airport.

Issued in Fort Worth, TX, on August 17, 2011.

Walter L. Tweedy,

Acting Manager, Operations Support Group, ATO Central Service Center.

[FR Doc. 2011–21912 Filed 8–25–11; 8:45 am]

BILLING CODE 4901–13–P

DEPARTMENT OF TRANSPORTATION

Federal Aviation Administration

14 CFR Part 71

[Docket No. FAA–2011–0831; Airspace Docket No. 11–ACE–17]

Proposed Establishment of Class E Airspace; Stuart, IA

AGENCY: Federal Aviation Administration (FAA), DOT.

ACTION: Notice of proposed rulemaking (NPRM).

SUMMARY: This action proposes to establish Class E airspace at Stuart, IA. Controlled airspace is necessary to accommodate new Copter RNAV Standard Instrument Approach Procedures (SIAP) at the city of Stuart Helistop. The FAA is taking this action to enhance the safety and management of Instrument Flight Rules (IFR) operations for SIAPs at the heliport.

DATES: 0901 UTC. Comments must be received on or before October 11, 2011.

ADDRESSES: Send comments on this proposal to the U.S. Department of Transportation, Docket Operations, 1200 New Jersey Avenue, SE., West Building Ground Floor, Room W12–140, Washington, DC 20590–0001. You must identify the docket number FAA–2011–0831/Airspace Docket No. 11–ACE–17, at the beginning of your comments. You may also submit comments through the Internet at *http://www.regulations.gov.* You may review the public docket containing the proposal, any comments received, and any final disposition in person in the Dockets Office between 9 a.m. and 5 p.m., Monday through Friday, except Federal holidays. The Docket Office (telephone 1–800–647–5527), is on the ground floor of the building at the above address.

FOR FURTHER INFORMATION CONTACT: Scott Enander, Central Service Center, Operations Support Group, Federal Aviation Administration, Southwest Region, 2601 Meacham Blvd., Fort Worth, TX 76137; telephone: (817) 321–7716.

SUPPLEMENTARY INFORMATION:

Comments Invited

Interested parties are invited to participate in this proposed rulemaking by submitting such written data, views, or arguments, as they may desire. Comments that provide the factual basis supporting the views and suggestions presented are particularly helpful in developing reasoned regulatory decisions on the proposal. Comments are specifically invited on the overall regulatory, aeronautical, economic, environmental, and energy-related aspects of the proposal. Communications should identify both docket numbers and be submitted in triplicate to the address listed above. Commenters wishing the FAA to acknowledge receipt of their comments on this notice must submit with those comments a self-addressed, stamped postcard on which the following statement is made: ''Comments to Docket No. FAA–2011–0831/Airspace Docket No. 11–ACE–17.'' The postcard will be date/time stamped and returned to the commenter.

Availability of NPRMs

An electronic copy of this document may be downloaded through the Internet at *http://www.regulations.gov.* Recently published rulemaking documents can also be accessed through the FAA's Web page at *http://www.faa.gov/airports_airtraffic/air_traffic/publications/airspace_amendments/.*

You may review the public docket containing the proposal, any comments received and any final disposition in person in the Dockets Office (see **ADDRESSES** section for address and phone number) between 9 a.m. and 5 p.m., Monday through Friday, except Federal holidays. An informal docket may also be examined during normal business hours at the office of the Central Service Center, 2601 Meacham Blvd, Fort Worth, TX 76137.

Persons interested in being placed on a mailing list for future NPRMs should contact the FAA's Office of Rulemaking (202) 267–9677, to request a copy of Advisory Circular No. 11–2A, Notice of Proposed Rulemaking Distribution System, which describes the application procedure.

The Proposal

This action proposes to amend Title 14, Code of Federal Regulations (14 CFR), Part 71 by establishing Class E airspace extending upward from 700 feet above the surface for new standard instrument approach procedures at the City of Stuart Helistop, Stuart, IA. Controlled airspace is needed for the safety and management of IFR operations at the heliport.

Class E airspace areas are published in Paragraph 6005 of FAA Order 7400.9U, dated August 18, 2010 and effective September 15, 2010, which is incorporated by reference in 14 CFR 71.1. The Class E airspace designation listed in this document would be published subsequently in the Order.

The FAA has determined that this proposed regulation only involves an established body of technical regulations for which frequent and routine amendments are necessary to keep them operationally current. It, therefore, (1) is not a ''significant regulatory action'' under Executive Order 12866; (2) is not a ''significant rule'' under DOT Regulatory Policies and Procedures (44 FR 11034; February 26, 1979); and (3) does not warrant preparation of a Regulatory Evaluation as the anticipated impact is so minimal. Since this is a routine matter that will only affect air traffic procedures and air navigation, it is certified that this rule, when promulgated, will not have a

significant economic impact on a substantial number of small entities under the criteria of the Regulatory Flexibility Act.

The FAA's authority to issue rules regarding aviation safety is found in Title 49 of the U.S. Code. Subtitle 1, Section 106 describes the authority of the FAA Administrator. Subtitle VII, Aviation Programs, describes in more detail the scope of the agency's authority. This rulemaking is promulgated under the authority described in Subtitle VII, Part A, Subpart I, Section 40103. Under that section, the FAA is charged with prescribing regulations to assign the use of airspace necessary to ensure the safety of aircraft and the efficient use of airspace. This regulation is within the scope of that authority as it would establish controlled airspace at the City of Stuart Helistop, Stuart, IA.

List of Subjects in 14 CFR Part 71

Airspace, Incorporation by reference, Navigation (air).

The Proposed Amendment

In consideration of the foregoing, the Federal Aviation Administration proposes to amend 14 CFR part 71 as follows:

PART 71—DESIGNATION OF CLASS A, B, C, D, AND E AIRSPACE AREAS; AIR TRAFFIC SERVICE ROUTES; AND REPORTING POINTS

1. The authority citation for part 71 continues to read as follows:

Authority: 49 U.S.C. 106(g); 40103, 40113, 40120; E.O. 10854, 24 FR 9565, 3 CFR, 1959–1963 Comp., p. 389.

§ 71.1 [Amended]

2. The incorporation by reference in 14 CFR 71.1 of FAA Order 7400.9U, Airspace Designations and Reporting Points, dated August 18, 2010, and effective September 15, 2010, is amended as follows:

Paragraph 6005 Class E airspace areas extending upward from 700 feet or more above the surface of the earth.

* * * * *

ACE IA E5 Stuart, IA [New]

Stuart, City of Stuart Helistop, IA
(Lat. 41°29′49″ N., long. 94°19′39″ W.)

That airspace extending upward from 700 feet above the surface within a 6.5-mile radius of the City of Stuart Helistop.

Issued in Fort Worth, TX, on August 17, 2011.

Walter L. Tweedy,

Acting Manager, Operations Support Group, ATO Central Service Center.

[FR Doc. 2011–21918 Filed 8–25–11; 8:45 am]

BILLING CODE 4901–13–P

DEPARTMENT OF TRANSPORTATION

Federal Aviation Administration

14 CFR Part 71

[Docket No. FAA–2011–0748; Airspace Docket No. 11–ACE–13]

Proposed Revocation and Amendment of Class E Airspace; Olathe, KS

AGENCY: Federal Aviation Administration (FAA), DOT.

ACTION: Notice of proposed rulemaking (NPRM).

SUMMARY: This action proposes to remove Class E airspace designated as an extension to Class D, and amend Class E airspace at Olathe, KS. Decommissioning of the Johnson County VHF Omni-directional Range/Distance Measuring Equipment (VOR/DME) at Johnson County Executive Airport, Olathe, KS, has made this action necessary for the safety and management of Instrument Flight Rules (IFR) operations at Johnson County Executive Airport.

DATES: 0901 UTC. Comments must be received on or before October 11, 2011.

ADDRESSES: Send comments on this proposal to the U.S. Department of Transportation, Docket Operations, 1200 New Jersey Avenue, SE., West Building Ground Floor, Room W12–140, Washington, DC 20590–0001. You must identify the docket number FAA–2011–0748/Airspace Docket No. 11–ACE–13, at the beginning of your comments. You may also submit comments through the Internet at *http://www.regulations.gov.* You may review the public docket containing the proposal, any comments received, and any final disposition in person in the Dockets Office between 9 a.m. and 5 p.m., Monday through Friday, except Federal holidays. The Docket Office (telephone 1–800–647–5527), is on the ground floor of the building at the above address.

FOR FURTHER INFORMATION CONTACT: Scott Enander, Central Service Center, Operations Support Group, Federal Aviation Administration, Southwest Region, 2601 Meacham Blvd., Fort Worth, TX 76137; telephone: (817) 321–7716.

SUPPLEMENTARY INFORMATION:

Comments Invited

Interested parties are invited to participate in this proposed rulemaking by submitting such written data, views, or arguments, as they may desire. Comments that provide the factual basis supporting the views and suggestions presented are particularly helpful in developing reasoned regulatory decisions on the proposal. Comments are specifically invited on the overall regulatory, aeronautical, economic, environmental, and energy-related aspects of the proposal. Communications should identify both docket numbers and be submitted in triplicate to the address listed above. Commenters wishing the FAA to acknowledge receipt of their comments on this notice must submit with those comments a self-addressed, stamped postcard on which the following statement is made: ''Comments to Docket No. FAA–2011–0748/Airspace Docket No. 11–ACE–13.'' The postcard will be date/time stamped and returned to the commenter.

Availability of NPRMs

An electronic copy of this document may be downloaded through the Internet at *http://www.regulations.gov.* Recently published rulemaking documents can also be accessed through the FAA's Web page at *http://www.faa.gov/airports_airtraffic/air_traffic/publications/airspace_amendments/.*

You may review the public docket containing the proposal, any comments received and any final disposition in person in the Dockets Office (see **ADDRESSES** section for address and phone number) between 9 a.m. and 5 p.m., Monday through Friday, except Federal holidays. An informal docket may also be examined during normal business hours at the office of the Central Service Center, 2601 Meacham Blvd., Fort Worth, TX 76137.

Persons interested in being placed on a mailing list for future NPRMs should contact the FAA's Office of Rulemaking (202) 267–9677, to request a copy of Advisory Circular No. 11–2A, Notice of Proposed Rulemaking Distribution System, which describes the application procedure.

The Proposal

This action proposes to amend Title 14, Code of Federal Regulations (14 CFR), part 71 by removing Class E airspace designated as an extension to a Class D or E surface area, and modifying Class E airspace extending upward from 700 feet above the surface, for standard instrument approach procedures at

Johnson County Executive Airport, Olathe, KS. Airspace reconfiguration is necessary due to the decommissioning of the Johnson County VOR/DME and cancellation of the VOR approach. Controlled airspace is necessary for the safety and management of IFR operations at the airport.

Class E airspace areas are published in Paragraphs 6004 and 6005, respectively, of FAA Order 7400.9U, dated August 18, 2010, and effective September 15, 2010, which is incorporated by reference in 14 CFR 71.1. The Class E airspace designation listed in this document would be published subsequently in the Order.

The FAA has determined that this proposed regulation only involves an established body of technical regulations for which frequent and routine amendments are necessary to keep them operationally current. It, therefore, (1) is not a ''significant regulatory action'' under Executive Order 12866; (2) is not a ''significant rule'' under DOT Regulatory Policies and Procedures (44 FR 11034; February 26, 1979); and (3) does not warrant preparation of a Regulatory Evaluation as the anticipated impact is so minimal. Since this is a routine matter that will only affect air traffic procedures and air navigation, it is certified that this rule, when promulgated, will not have a significant economic impact on a substantial number of small entities under the criteria of the Regulatory Flexibility Act.

The FAA's authority to issue rules regarding aviation safety is found in Title 49 of the U.S. Code. Subtitle 1, Section 106 describes the authority of the FAA Administrator. Subtitle VII, Aviation Programs, describes in more detail the scope of the agency's authority. This rulemaking is promulgated under the authority described in Subtitle VII, Part A, Subpart I, Section 40103. Under that section, the FAA is charged with prescribing regulations to assign the use of airspace necessary to ensure the safety of aircraft and the efficient use of airspace. This regulation is within the scope of that authority as it would modify controlled airspace at Johnson County Executive Airport, Olathe, KS.

List of Subjects in 14 CFR Part 71

Airspace, Incorporation by reference, Navigation (air).

The Proposed Amendment

In consideration of the foregoing, the Federal Aviation Administration proposes to amend 14 CFR part 71 as follows:

PART 71—DESIGNATION OF CLASS A, B, C, D, AND E AIRSPACE AREAS; AIR TRAFFIC SERVICE ROUTES; AND REPORTING POINTS

1. The authority citation for part 71 continues to read as follows:

Authority: 49 U.S.C. 106(g); 40103, 40113, 40120; E.O. 10854, 24 FR 9565, 3 CFR, 1959–1963 Comp., p. 389.

§ 71.1 [Amended]

2. The incorporation by reference in 14 CFR 71.1 of FAA Order 7400.9U, Airspace Designations and Reporting Points, dated August 18, 2010, and effective September 15, 2010, is amended as follows:

Paragraph 6004 Class E airspace areas designated as an extension to a Class D or Class E surface area.

* * * * *

ACE KS E4 Olathe, Johnson County Executive Airport, KS [Removed]

Paragraph 6005 Class E airspace areas extending upward from 700 feet or more above the surface of the earth.

* * * * *

ACE KS E5 Olathe, Johnson County Executive Airport, KS [Amended]

Olathe, Johnson County Executive Airport, KS

(Lat. 38°50′51″ N., long. 94°44′15″ W.)

That airspace extending upward from 700 feet above the surface within a 6.4-mile radius of Johnson County Executive Airport.

Issued in Fort Worth, TX, on August 18, 2011.

Walter L. Tweedy,

Acting Manager, Operations Support Group, ATO Central Service Center.

[FR Doc. 2011–21914 Filed 8–25–11; 8:45 am]

BILLING CODE 4901–13–P

DEPARTMENT OF HOUSING AND URBAN DEVELOPMENT

24 CFR Part 202

[Docket No. FR–5416–P–01]

RIN 2502–AI91

Approval of Farm Credit System Lending Institutions in FHA Mortgage Insurance Programs

AGENCY: Office of the Assistant Secretary for Housing—Federal Housing Commissioner, HUD.

ACTION: Proposed rule.

SUMMARY: This proposed rule would amend HUD regulations to enable the direct lending institutions of the Farm Credit System to seek approval to participate in the Federal Housing Administration (FHA) mortgage insurance programs as approved mortgagees and lenders. Recent difficulties in mortgage finance markets have reduced the availability of housing credit in rural areas. HUD proposes to extend FHA mortgagee and lender eligibility to the Farm Credit System to provide an additional avenue for mortgage financing in these areas.

DATES: *Comment Due Date:* October 25, 2011.

ADDRESSES: Interested persons are invited to submit comments regarding this proposed rule to the Regulations Division, Office of General Counsel, Department of Housing and Urban Development, 451 7th Street, SW., Room 10276, Washington, DC 20410–0500. Communications must refer to the above docket number and title. There are two methods for submitting public comments. All submissions must refer to the above docket number and title.

1. Submission of Comments by Mail. Comments may be submitted by mail to the Regulations Division, Office of General Counsel, Department of Housing and Urban Development, 451 7th Street, SW., Room 10276, Washington, DC 20410–0500.

2. Electronic Submission of Comments. Interested persons may submit comments electronically through the Federal eRulemaking Portal at *http://www.regulations.gov.* HUD strongly encourages commenters to submit comments electronically. Electronic submission of comments allows the commenter maximum time to prepare and submit a comment, ensures timely receipt by HUD, and enables HUD to make them immediately available to the public. Comments submitted electronically through the *http://www.regulations.gov* Web site can be viewed by other commenters and interested members of the public. Commenters should follow the instructions provided on that site to submit comments electronically.

Note: To receive consideration as public comments, comments must be submitted through one of the two methods specified above. Again, all submissions must refer to the docket number and title of the rule.

No Facsimile Comments. Facsimile (Fax) comments are not acceptable.

Public Inspection of Public Comments. All properly submitted comments and communications submitted to HUD will be available for public inspection and copying between 8 a.m. and 5 p.m. weekdays at the above address. Due to security measures at the HUD Headquarters building, an appointment to review the public comments must be scheduled in advance by calling the Regulations

Division at 202–708–3055 (this is not a toll-free number). Individuals with speech or hearing impairments may access this number via TTY by calling the Federal Information Relay Service at 800–877–8339. Copies of all comments submitted are available for inspection and downloading at *http://www.regulations.gov.*

FOR FURTHER INFORMATION CONTACT: Office of Lender Activities and Program Compliance, Department of Housing and Urban Development, 451 7th Street, SW., Washington, DC 20410–8000; telephone number 202–708–1515 (this is not a toll-free number). Persons with hearing or speech impairments may access this number through TTY by calling the toll-free Federal Information Relay Service at 800–877–8339.

SUPPLEMENTARY INFORMATION:

I. Background

Section 203(b)(1) of the National Housing Act (12 U.S.C. 1709(b)(1)) (NHA) provides that in order for a mortgage to be eligible for Federal Housing Administration (FHA) mortgage insurance under Title II of the NHA, the mortgage shall ''* * * have been made to, and held by, a mortgagee approved by the Secretary as responsible and able to service the mortgage properly.'' Similar approval provisions for lenders are contained in Title I, section 2 of the NHA (12 U.S.C. 1703), which authorizes FHA insurance of lending institutions. Specifically, section 2(a) of the NHA provides that the Secretary of HUD is authorized to insure lenders ''which the Secretary finds to be qualified by experience of facilities. * * *'' The regulations that implement these statutory mandates are codified at 24 CFR part 202 (entitled ''Approval of Lending Institutions and Mortgagees''). The regulations establish several categories of mortgagees and lenders, based upon government association or supervision, capital net worth, and the mortgage or lending functions in which the applicants for FHA approval intend to engage.

The part 202 regulations do not currently provide for FHA approval of lending institutions that are part of the Farm Credit System. The Farm Credit System is a federally chartered network of borrower-owned lending institutions composed of cooperatives and related service organizations. The mission of the Farm Credit System is to provide sound and dependable credit to American farmers, ranchers, producers, or harvesters of aquatic products, their cooperatives, and farm-related businesses. The lending institutions that comprise the Farm Credit System make appropriately structured loans (including loans for the purchase of moderately priced homes in rural areas) to qualified individuals and businesses at competitive rates, and provide financial services and advice to those persons and businesses. Federal oversight by the Farm Credit Administration provides for the safety and soundness of participating lending institutions.

The four farm credit banks, one agricultural credit bank (hereinafter collectively referred to as the Farm Credit banks), and their direct lender associations (the Agricultural Credit Associations) comprise the major functional entities of the Farm Credit System. The Farm Credit banks are government-sponsored enterprises (GSEs) and must operate within limits established by the Farm Credit Act of 1971, as amended (12 U.S.C. 2001 *et seq.*). In general, the Farm Credit banks provide services and funds to local Agricultural Credit Associations that, in turn, provide short-, intermediate-, and long-term credit to farmers, ranchers, producers, and harvesters of aquatic products, and to rural residents for moderately priced housing. The Agricultural Credit Associations also make loans for basic agricultural processing and marketing activities, and to farm-related businesses.

The Farm Credit banks collectively issue debt securities in the national and international money markets through the Federal Farm Credit Banks Funding Corporation and use this capital to provide borrowers with access to reliable and competitive credit. The full financial strength of all of the Farm Credit banks stands behind the debt issued on behalf of the Farm Credit System. In addition, investors in Farm Credit System debt are protected by the assets of the self-funded Farm Credit System Insurance Fund, which is administered by the Farm Credit System Insurance Corporation. Additional information regarding the Farm Credit System is available on the Farm Credit Administration Web site at *http://www.fca.gov/index.html.*

II. This Proposed Rule

This proposed rule would amend HUD's mortgagee and lender approval regulations at 24 CFR part 202 to enable the direct lending institutions of the Farm Credit System to seek approval to participate in the mortgage insurance programs under the NHA as FHA-approved mortgagees and lenders. At the time HUD originally published its part 202 regulations in 1997, given the then-ready availability of mortgage credit and the existence of other mortgage assistance programs for rural housing, there was little need to include the Farm Credit Banks and Agricultural Credit Associations. However, the downturn in the mortgage lending market has prompted HUD to reconsider this omission. As lenders strive to increase capital reserves and tighten underwriting standards, and as private mortgage insurers retreat from some markets, the availability of financing for housing is reduced, particularly in rural areas. HUD proposes to extend FHA mortgagee and lender eligibility to the Farm Credit System to provide an additional avenue for mortgage financing in rural areas. Participation in FHA programs incentivizes lenders to make mortgage credit available by insuring them against potential losses in the event of defaults. Further, FHA-insured mortgage loans can be securitized by Ginnie Mae and sold in the secondary market, which can significantly improve the availability of funds and permit more favorable interest rates than would otherwise be likely.

FHA proposes to amend 24 CFR 202.10, which lists the governmental institutions and GSEs eligible to participate in FHA programs, by adding the Agricultural Credit Associations as eligible for FHA approval as Government mortgagees and lenders. Approval of Farm Credit System direct-lending institutions would be based on the same requirements applicable to other GSEs under § 202.10. HUD believes the proposed extension of FHA program eligibility will better enable the direct-lending institutions of the Farm Credit System to provide sound and dependable mortgage credit to rural communities.

III. Findings and Certifications

Executive Order 12866, Regulatory Planning and Review

The Office of Management and Budget (OMB) reviewed this proposed rule under Executive Order 12866 (entitled ''Regulatory Planning and Review''). The proposed rule has been determined to be a ''significant regulatory action,'' as defined in section 3(f) of the Order, but not economically significant, as provided in section 3(f)(1) of the Order.

Based on Farm Credit Administration (FCA) data, HUD determined it is reasonable to assume a 5 percent increase in the origination of FHA-insured mortgages by Farm Credit System institutions as a result of this proposed rule. Based on the approximately 44,000 rural FCA home loans originated in 2010, FHA could expect an additional 2,200 loans

annually. Given this loan volume, the effects of this rule will not in any year exceed the $100 million threshold for an economically significant action as set forth by Executive Order 12866.

The docket file for this proposed rule is available for public inspection in the Regulations Division, Office of General Counsel, Department of Housing and Urban Development, 451 7th Street, SW., Room 10276, Washington, DC 20410–0500. Due to security measures at the HUD Headquarters building, please schedule an appointment to review the docket file by calling the Regulations Division at 202–402–3055 (this is not a toll-free number). Individuals with speech or hearing impairments may access this number via TTY by calling the Federal Information Relay Service at 800–877–8339.

Regulatory Flexibility Act

The Regulatory Flexibility Act (RFA) (5 U.S.C. 601 *et seq.*) generally requires an agency to conduct a regulatory flexibility analysis of any rule subject to notice and comment rulemaking requirements, unless the agency certifies that the rule will not have a significant economic impact on a substantial number of small entities.

This proposed rule would not impose any new regulatory requirements or economic burdens on small entities. Indeed, the rule imposes no new requirements on any entities. Rather, the proposed rule would merely provide an option for direct lending institutions of the Farm Credit System to participate in HUD's mortgage insurance programs under the NHA as FHA-approved supervised lenders and mortgagees. Farm Credit System institutions wishing to participate in the programs would be required to comply with FHA mortgagee and lender approval requirements; however, participation in the mortgage insurance programs is voluntary. Accordingly, to the extent that the proposed rule has any economic impact, it would be to confer the economic benefit of participating in the FHA mortgage insurance programs to those financial institutions of the Farm Credit System that voluntarily elect to seek approval as FHA-approved mortgagees or lenders.

For the above reasons, the undersigned has determined that the final rule will not have a significant economic impact on a substantial number of small entities. Notwithstanding HUD's determination that this rule will not have a significant effect on a substantial number of small entities, HUD specifically invites comments regarding any less burdensome alternatives to this rule that will meet HUD's objectives as described in the preamble to this rule.

Environmental Impact

This rule does not direct, provide for assistance or loan and mortgage insurance for, or otherwise govern or regulate, real property acquisition, disposition, leasing, rehabilitation, alteration, demolition, or new construction, or establish, revise, or provide for standards for construction or construction materials, manufactured housing, or occupancy. This rule is limited to the eligibility of those entities that may be approved as FHA-approved lenders. Accordingly, under 24 CFR 50.19(c)(1), this rule is categorically excluded from environmental review under the National Environmental Policy Act of 1969 (42 U.S.C. 4321).

Executive Order 13132, Federalism

Executive Order 13132 (entitled ''Federalism'') prohibits an agency from publishing any rule that has federalism implications if the rule either imposes substantial direct compliance costs on state and local governments and is not required by statute, or the rule preempts state law, unless the agency meets the consultation and funding requirements of section 6 of the Executive Order. This rule would not have federalism implications and would not impose substantial direct compliance costs on state and local governments or preempt state law within the meaning of the Executive Order.

Paperwork Reduction Act

The information collection requirements contained in this notice have been approved by the Office of Management and Budget (OMB) under the Paperwork Reduction Act of 1995 (44 U.S.C. 3501–3520) and assigned OMB Control Number 2502–0005. In accordance with the Paperwork Reduction Act, an agency may not conduct or sponsor, and a person is not required to respond to, a collection of information, unless the collection displays a currently valid OMB control number.

Unfunded Mandates Reform Act

Title II of the Unfunded Mandates Reform Act of 1995 (2 U.S.C. 1531–1538) (UMRA) establishes requirements for federal agencies to assess the effects of their regulatory actions on state, local, and tribal governments, and on the private sector. This rule would not impose any federal mandates on any state, local, or tribal governments, or on the private sector, within the meaning of the UMRA.

List of Subjects in 24 CFR Part 202

Administrative practice and procedure, Home improvement, Manufactured homes, Mortgage insurance, Reporting and recordkeeping requirements.

Accordingly, for the reasons stated in the preamble above, HUD proposes to amend 24 CFR part 202 as follows:

PART 202—APPROVAL OF LENDING INSTITUTIONS AND MORTGAGEES

1. The authority citation for part 202 continues to read as follows:

Authority: 12 U.S.C. 1703, 1709, and 1715b; 42 U.S.C. 3535(d).

2. In § 202.10, revise the first sentence of paragraph (a) to read as follows:

§ 202.10 Governmental institutions, Government-sponsored enterprises, public housing agencies and State housing agencies.

(a) *Definition.* A Federal, State or municipal governmental agency, a Federal Reserve Bank, a Federal Home Loan Bank, the Federal Home Loan Mortgage Corporation, the Federal National Mortgage Association, or an Agricultural Credit Association affiliated with a Farm Credit Bank or Agricultural Credit Bank, may be an approved mortgagee or lender. * * * * * * * * *

Dated: August 22, 2011.

Carol J. Galante,

Acting Assistant Secretary for Housing—Federal Housing Commissioner.

[FR Doc. 2011–21910 Filed 8–25–11; 8:45 am]

BILLING CODE P

DEPARTMENT OF HOMELAND SECURITY

Coast Guard

33 CFR Subchapter S

[Docket No. USCG–2011–0497]

RIN 1625–AB73

Recreational Vessel Propeller Strike and Carbon Monoxide Poisoning Casualty Prevention

AGENCY: Coast Guard, DHS.

ACTION: Advance notice of proposed rulemaking.

SUMMARY: The Coast Guard seeks public input on how best to prevent recreational boating casualties caused by propeller strikes and carbon monoxide (CO) poisoning. The Coast Guard, in particular, seeks comments on specific measures to protect recreational

boaters in the water near the stern of a recreational vessel. The Coast Guard also seeks additional ideas, specific data, and other facts relating to propeller strike and CO poisoning-related casualties to help guide the Coast Guard in selecting the best course of action to address these issues.

DATES: Comments and related material must either be submitted to our online docket via *http://www.regulations.gov* on or before November 25, 2011 or reach the Docket Management Facility by that date.

ADDRESSES: You may submit comments identified by docket number USCG–2011–0497 using any one of the following methods:

(1) *Federal eRulemaking Portal: http://www.regulations.gov.*

(2) *Fax:* 202–493–2251.

(3) *Mail:* Docket Management Facility (M–30), U.S. Department of Transportation, West Building Ground Floor, Room W12–140, 1200 New Jersey Avenue, SE., Washington, DC 20590–0001.

(4) *Hand delivery:* Same as mail address above, between 9 a.m. and 5 p.m., Monday through Friday, except Federal holidays. The telephone number is 202–366–9329.

To avoid duplication, please use only one of these four methods. See the ''Public Participation and Request for Comments'' portion of the **SUPPLEMENTARY INFORMATION** section below for instructions on submitting comments.

FOR FURTHER INFORMATION CONTACT: If you have questions on this advanced notice of proposed rulemaking, call or e-mail Jeff Ludwig, Coast Guard; telephone 202–372–1061, e-mail *Jeffrey.A.Ludwig@uscg.mil.* If you have questions on viewing or submitting material to the docket, call Renee V. Wright, Program Manager, Docket Operations, telephone 202–366–9826.

SUPPLEMENTARY INFORMATION:

Table of Contents for Preamble

I. Public Participation and Request for Comments
A. Submitting Comments
B. Viewing Comments and Documents
C. Privacy Act
D. Public Meeting
II. Abbreviations
III. Background
A. Propeller Strike-Related Casualties
B. CO Poisoning-Related Casualties
IV. Information Requested
A. General Questions Regarding Measures To Address Propeller Strike-Related and CO Poisoning-Related Casualties
B. Specific Measures To Address Propeller Strike-Related and CO Poisoning-Related Casualties
C. Specific Information Sought

I. Public Participation and Request for Comments

We encourage you to respond to this advance notice of proposed rulemaking by submitting comments and related materials. All comments received will be posted, without change, to *http://www.regulations.gov* and will include any personal information you have provided.

A. Submitting Comments

If you submit a comment, please include the docket number for this rulemaking (USCG–2011–0497), indicate the specific section of this document to which each comment applies, and provide a reason for each suggestion or recommendation. You may submit your comments and material online or by fax, mail or hand delivery, but please use only one of these means. We recommend that you include your name and a mailing address, an e-mail address, or a telephone number in the body of your document so that we can contact you if we have questions regarding your submission.

To submit your comment online, go to *http://www.regulations.gov* and type ''USCG–2011–0497'' in the ''Keyword'' box. If you submit your comments by mail or hand delivery, submit them in an unbound format, no larger than 8½ by 11 inches, suitable for copying and electronic filing. If you submit comments by mail and would like to know that they reached the Facility, please enclose a stamped, self-addressed postcard or envelope. We will consider all comments and material received during the comment period.

B. Viewing Comments and Documents

To view comments, as well as documents mentioned in this preamble as being available in the docket, go to *http://www.regulations.gov* and click on the ''Read Comments'' box, which will then become highlighted in blue. In the ''Keyword'' box type ''USCG–2011–0497'' and click ''Search.'' Click the ''Open Docket Folder'' in the ''Actions'' column. If you do not have access to the Internet, you may view the docket online by visiting the Docket Management Facility in Room W12–140 on the ground floor of the Department of Transportation West Building, 1200 New Jersey Avenue, SE., Washington, DC 20590, between 9 a.m. and 5 p.m., Monday through Friday, except Federal holidays. We have an agreement with the Department of Transportation to use the Docket Management Facility.

C. Privacy Act

Anyone can search the electronic form of comments received into any of our dockets by the name of the individual submitting the comment (or signing the comment, if submitted on behalf of an association, business, labor union, *etc.*). You may review a Privacy Act notice regarding our public dockets in the January 17, 2008, issue of the **Federal Register** (73 FR 3316).

D. Public Meeting

We do not now plan to hold a public meeting. However, you may submit a public meeting request to the docket using one of the methods specified under **ADDRESSES**. In your request, explain why you believe a public meeting would be beneficial. If we determine that holding a public meeting would aid us in determining how best to prevent recreational boating casualties caused by propeller strikes and carbon monoxide (CO) poisoning, we will hold a meeting at a time and place announced by a later notice in the **Federal Register**.

II. Abbreviations

ABYC American Boat and Yacht Council
CO Carbon monoxide
DHS Department of Homeland Security
ECOS Engine cut-off switches
EPA Environmental Protection Agency
FR Federal Register
NBSAC National Boating Safety Advisory Committee
NASBLA National Association of State Boating Law Administrators
NIOSH National Institute for Occupational Safety and Health
§ Section symbol
U.S.C. United States Code

III. Background

In a recent five year period, approximately 82.1 million people annually participated in recreational boating as an outdoor recreation activity in the United States.[1] Of that population, approximately 53.8 million people enjoyed recreational boating on a motorized recreational vessel. Unfortunately, motorized recreational boating poses risks, including property damage, human injury, and even death. One of these risks is boating casualties caused by persons being struck by a recreational vessel propeller. An additional, more recently discovered

[1] H. Ken Cordell *et al., Long-Term National Trends in Outdoor Recreation Activity Participation—1980 to Now,* May 2009 (A Recreation Research Report in the Internet Research Information Series), *available at http://warnell.forestry.uga.edu/nrrt/nsre/IRISRec/IRISRec12rpt.pdf.* This number represents the estimated number of people, operators and passengers who participated in recreational boating in 2005–2009.

risk is boating casualties caused by carbon monoxide (CO) poisoning. The Coast Guard is interested in measures to reduce these two specific risks, both of which involve persons near the rear of a motorized recreational vessel.

Under 46 U.S.C. chapter 43 (Recreational Vessels), the Secretary of the Department of Homeland Security is responsible for establishing minimum safety standards for recreational vessels and associated equipment, and for requiring installation, carrying, or use of associated equipment. *See* 46 U.S.C. 4302(a). The Coast Guard, on behalf of the Secretary, carries out this responsibility.

Propeller Strike-Related Casualties

Since the mid-1990s, the Coast Guard has investigated the appropriate course of action to address propeller strike-related casualties, to understand the causes of these casualties, and to determine the best way to prevent casualties from occurring. The Coast Guard has solicited requests for comments on various proposals to reduce propeller strike-related casualties, and proposed and then withdrew two separate rulemakings addressing this issue. The first rulemaking sought public input on the use of swimming ladders, warning notices, clear aft vision, propeller-shaft engagement alarms, engine cut-off switches, and education to address recreational vessel and propeller strike-related casualties. *See* 60 FR 25191 (May 11, 1995) (Request for comments); 61 FR 13123 (Mar. 26, 1996) (Advance Notice of Proposed Rulemaking); 62 FR 22991 (Apr. 28, 1997) (Request for comments). The Coast Guard withdrew this rulemaking because of a lack of sufficient data for the proposals at that time. *See* 66 FR 63650 (Dec. 10, 2001) (Notice of Withdrawal).

At the same time the Coast Guard withdrew the first rulemaking, it initiated the second rulemaking, which focused on propeller injury mitigation devices commonly referred to as ''propeller guards.'' The notice of proposed rulemaking proposed requiring owners of certain recreational houseboats to either install a propeller guard or to use all of the following propeller injury avoidance measures: a swim ladder interlock, an aft visibility device, and an engine cut-off switch. *See* 66 FR 63645 (Dec. 10, 2001). The Coast Guard withdrew this rulemaking after public comments raised several issues, including the lack of a practical definition of a houseboat and straightforward performance requirements, and the potential costs of installing propeller guards. *See* 72 FR 59064 (Oct. 18, 2007) (Notice of Withdrawal). In the Notice of Withdrawal, the Coast Guard stated that it is still ''exploring options that would more effectively prevent propeller injuries and impose a smaller burden on the economy,'' and specifically noted engine cut-off switches and boating safety education as two of those options. *Id.* at 59065.

In 2006, the National Boating Safety Advisory Council (NBSAC) established a Propeller Injury Working Group to consider the development of educational formats, review of technologies, risk management techniques, accident scenarios, cost benefit analysis, and high-risk recreational vessel definitions and determinations. *See* NBSAC Resolution # 2005–76–04, available at *http://homeport.uscg.mil/NBSAC.* The working group proposed four recommendations: (1) Develop a rental vessel education kit, (2) require the installation of engine cut-off switches, (3) require operators to use installed engine cut-off switches, and (4) require operators of vessels to shut off the engine when individuals in the water are within an unsafe distance from the vessel. NBSAC endorsed these recommendations and forwarded them to the Coast Guard for further consideration. *See* NBSAC Resolution ## 2006–77–01, 2006–77–02, 2006–77–03 and 2006–77–04, available at *http://homeport.uscg.mil/NBSAC.*

To address NSBAC's second and third recommendations (NBSAC Resolution ## 2006–77–02 and 2006–77–03) involving the installation, maintenance, and use of engine cut-off switches [2] and to follow-up on the discussion of engine cut-off switches in the Notice of Withdrawal of the propeller guard rulemaking, the Coast Guard initiated a separate rulemaking titled ''Installation and Use of Engine Cut-Off Switches'' (ECOS) (RIN 1625–AB34). In the ECOS rulemaking, the Coast Guard seeks to prevent recreational boating casualties caused by persons being struck by a recreational vessel or propeller when the vessel operator is separated from the operating controls (*e.g.,* falls overboard or is ejected). The ECOS rulemaking, however, only addresses one cause of propeller-strikes. Recreational boaters in the water near the rear of a recreational vessel also face the possibility of being inadvertently struck by a vessel's propeller even when the vessel operator is in control of the vessel.

The Coast Guard is initiating this rulemaking to seek public input on NSBAC's fourth recommendation in NBSAC Resolution # 2006–77–04, as well as other options to prevent casualties caused when persons in the water near the rear of a recreational vessel are inadvertently struck by a vessel's propeller. For example, a person may be struck by a propeller when using the lower unit of the recreational vessel's propulsion system as a step to reboard the vessel. If the propeller is spinning while a person is attempting to use the lower unit as a step, the person may either step directly onto the spinning propeller or slip off the lower unit of the propulsion system and fall onto the spinning propeller resulting in severe injuries and possibly death.

CO Poisoning-Related Casualties

Over the last decade, boating-related activities that require participants to be near the rear of a recreational vessel in close proximity to a vessel's engine exhaust emissions have increased in popularity. With an increase in the prevalence of these activities, casualties associated with these activities have also increased, and investigations of these casualties have led to an increased understanding of CO concentrations near the rear of recreational vessels.

A potentially deadly gas that is odorless, colorless, and tasteless, CO occurs as a component of internal combustion engine exhaust. When inhaled, CO enters the bloodstream through the lungs and displaces the oxygen needed by the body, resulting in hypoxia (suffocation) of body tissues.

In 2000, the National Park Service, in coordination with the National Institute for Occupational Safety and Health (NIOSH) and the Coast Guard, initiated a study to evaluate CO exposure from generators and propulsion engines on houseboats.[3] This study revealed high concentrations of CO on and around houseboats using gasoline-powered generators. In 2002, the National Park Service, NIOSH, and the Coast Guard began working to measure CO levels on other types of recreational vessels and to evaluate new engineering technologies

[2] In response to the first recommendation (NBSAC Resolution # 2006–77–01), the Coast Guard developed a rental education kit, which is now available to vessel liveries through the following Web site: *http://rentalboatsafety.com/participate.php.*

[3] Department of Health and Human Services, Center for Disease Control, National Institute for Occupational Safety and Health, *NIOSH Health Hazard Evaluation Report: HETA #2000-0400-2956, HETA # 2002–0325–2956, Glen Canyon National Recreation Area, Arizona and Utah* (January 2005) available at *http://www.cdc.gov/niosh/hhe/reports/pdfs/2000-0400-2956.pdf.*

designed to reduce CO poisonings related to the vessels' operation.

In 2008, the Environmental Protection Agency (EPA) promulgated exhaust emission standards for marine engines, including first-time EPA standards for sterndrive and inboard engines. *See* 73 FR 59034 (''Control of Emissions from Nonroad Spark-Ignition Engines and Equipment''). The EPA standards apply to new marine engines, and the Coast Guard expects these EPA standards to have a dramatic effect on the levels of CO in the exhaust emissions of new sterndrive and inboard engines and thus reduce CO levels on recreational vessels with such engines.

In response to the EPA standards, as well as to address CO poisoning-related casualties, manufacturers have developed new catalyst-based low CO sterndrive and inboard engines. These EPA standards and resulting new technology, however, apply only to newly manufactured engines, and do not affect potentially dangerous levels of CO on recreational vessels with older engines.

The National Association of State Boating Law Administrators (NASBLA), as well as some States, are also concerned with the issue of CO poisoning-related casualties, and efforts to address this issue cover both new as well as existing recreational engines by focusing on recreational vessel operation rather than on technology. NASBLA has been engaged in addressing this issue since 2003 and has developed a consensus model act prohibiting persons from operating any recreational vessel or having the engine idle while someone is in the water and holding onto the rear of the recreational vessel. *See* NASBLA Model Act for ''Safe Practices for Boat-Towed Watersports'' (September 10, 2007), available at *http://nasbla.org/i4a/pages/index.cfm?pageid=3290.* At least five States have enacted laws addressing CO poisoning-related casualties based on this model act.

- California and Washington have prohibited operating a recreational vessel or having the engine of the vessel idle while an individual is ''teak surfing, platform dragging, or bodysurfing behind'' [4] or ''occupying or holding onto the swim platform, swim deck, swim step, or swim ladder of the vessel,'' except ''when an individual is occupying the swim platform, swim deck, swim step, or swim ladder for a very brief period of time while assisting with the docking or departure of the vessel, while exiting or entering the vessel, or while the vessel is engaged in law enforcement or emergency rescue activity.'' *See* Cal. Harb. & Nav. Code § 681 (West); Wash. Rev. Code Ann. § 79A.60.660 (West).
- Nevada has prohibited operation of a recreational vessel while any person is hanging onto, or sitting, standing or riding on, a swim platform or a swim ladder that is attached to the vessel as a form of reckless or negligent operation of a vessel. *See* Nev. Rev. Stat. § 488.400; Nev. Admin. Code § 488.435.
- Oregon prohibits operating a recreational vessel or having the vessel's engine idle while any person holds onto or occupies any portion of the vessel located aft of the transom, including a step, ladder, platform or deck, in order to ride on that portion of the vessel while the vessel is under way at any speed or to be pulled by the vessel, except when assisting in the docking or departure of the vessel, exiting or entering the vessel, or engaging in law enforcement activities. *See* Or. Rev. Stat. § 830.362.
- Pennsylvania prohibits operation of a recreational vessel at any speed with a person or persons sitting, riding, or hanging on a swim platform or swim ladder attached to the vessel, except when launching, retrieving, docking or anchoring the vessel. *See* 58 Pa. Code § 105.3.

The Coast Guard is initiating this rulemaking to consider options to prevent CO poisoning-related casualties on all recreational vessels, especially existing recreational vessels that are not affected by the 2008 EPA exhaust emission standards or by new technology for marine engines.

IV. Information Requested

In addition to any general information, data, ideas, and comments that the public would like to provide, the Coast Guard requests comments on specific measures outlined below to prevent propeller strike-related and CO poisoning-related casualties. The Coast Guard also seeks specific information regarding certain data and other facts related to these measures, as listed below. Please provide as much quantitative data as possible, including data sources and complete citations.

A. General Questions Regarding Measures To Address Propeller Strike-Related and CO Poisoning-Related Casualties

When responding to the general questions below, please provide quantitative data on costs, benefits, and other relevant information, specifying sources of information and citations.

1. Recreational boating accidents can cause a variety of negative impacts, including loss of life, injuries, and property damage. What sources of data or information exist detailing benefits or avoided damages which may result from the use of measures to avoid propeller strike-related and CO poisoning-related casualties?
2. What vessel types should be considered for mandatory measures to reduce or eliminate propeller strike-related and CO poisoning-related casualties (*e.g.,* all motorized vessels, motorized vessels with certain engine configurations, certain types of motorized vessels (*e.g.,* houseboats)?
3. Some vessels have measures already installed to reduce or eliminate propeller strike-related and CO poisoning-related casualties. What data exists to estimate the percentage of recreational vessels that have measures to reduce or eliminate propeller strike-related and CO poisoning-related casualties?
4. How many and what types of recreational vessels or engines do not have measures to reduce or eliminate propeller strike-related and CO poisoning-related casualties?
5. What is the average amount of time it would take for a vessel operator to use each measure to reduce or eliminate propeller strike-related and CO poisoning-related casualties?
6. How would operators and passengers be impacted by the number of times each measure to reduce or eliminate propeller strike-related and CO poisoning-related casualties is used by the vessel operator? How should the Coast Guard consider the potential ''hassle factor'' associated with using each measure to reduce or eliminate propeller strike-related and CO poisoning-related casualties?
7. If a vessel or engine currently does not have any measures to reduce or eliminate propeller strike-related and CO poisoning-related casualties installed, what are the installation costs, separated out into parts and labor categories, for each such measure?
8. What is the average lifespan of each measure used to reduce or eliminate propeller strike-related and CO poisoning-related casualties?
9. What are the associated maintenance and replacement costs of

[4] ''Teak surfing'' or ''platform dragging'' means holding onto the swim platform, swim deck, swim step, swim ladder, or any portion of the exterior of the transom of a motor driven vessel for any amount of time while the motor driven vessel is underway at any speed. *See* Cal. Harb. & Nav. Code § 681(d) (West); Wash. Rev. Code Ann. § 79A.60.660(4) (West). ''Bodysurfing'' means swimming or floating on one's stomach or on one's back on or in the wake directly behind a motor driven vessel that is underway. *See* Cal. Harb. & Nav. Code § 681(e) (West); Wash. Rev. Code Ann. § 79A.60.660(5) (West).

each measure used to reduce or eliminate propeller strike-related and CO poisoning-related casualties?

10. What is the recommended replacement schedule of each measure used to reduce or eliminate propeller strike-related and CO poisoning-related casualties? How often are pieces of equipment replaced? What is the average cost of replacement per piece of equipment? What is the average cost of purchasing any required spare equipment?

11. How would individual measures change boater preference for different measures used to reduce or eliminate propeller strike-related and CO poisoning-related casualties? Would boaters choose more expensive systems over standard systems? If so, why?

12. What is the risk of unintended activations of each measure used to reduce or eliminate propeller strike-related and CO poisoning-related casualties? What is the current estimated rate of unintended activations? What are the impacts of unintended activations? Are there any injuries or fatalities associated with unintended activations?

13. What is the risk of each measure used to reduce or eliminate propeller strike-related and CO poisoning-related casualties (*i.e.,* engine does not cut off when interlock device is engaged)? What is the current estimated rate of device failures? What are the impacts of device failures? Are there any injuries or fatalities associated with such device failures?

14. What data or information exists that could be used to estimate compliance rates for measures used to reduce or eliminate propeller strike-related and CO poisoning-related casualties? What data exists to estimate how compliance will change from initial phase-in to full implementation of possible mandatory measures?

15. How would the Coast Guard or other law enforcement officers enforce required measures used to reduce or eliminate propeller strike-related and CO poisoning-related casualties? What would be the challenges with such enforcement? What would be the training costs and other impacts on law enforcement agencies of implementing measures used to reduce or eliminate propeller strike-related and CO poisoning-related casualties?

16. Would any of the different measures designed to reduce or eliminate propeller strike-related and CO poisoning-related casualties have a significant economic impact on a substantial number of small entities? What sources of data or information exist detailing the economic impact on small entities which may result from the use of measures to avoid propeller strike-related and CO poisoning-related casualties?

17. What are the compliance rates with State laws intended prevent propeller strike-related casualties for recreational boaters?

18. What are the compliance rates with State laws intended to prevent CO poisoning-related casualties for recreational boaters?

19. What is the voluntary use rate of measures designed to reduce or eliminate propeller strike-related and CO poisoning-related casualties in States without such laws?

20. Five States (California, Washington, Nevada, Oregon and Pennsylvania) currently require measures to reduce or prevent propeller strike-related and CO poisoning-related casualties. What other State laws or regulations are being developed with measures to reduce or prevent propeller strike-related and CO poisoning-related casualties? Please provide any data or information from the implementation or development of these State regulations to assist the Coast Guard as it considers whether to require measures to reduce or eliminate propeller strike-related and CO poisoning-related casualties.

21. What are the costs associated with implementation of the aforementioned State laws?

B. Specific Measures To Address Propeller Strike-Related and CO Poisoning-Related Casualties

1. *A possible requirement that operators of recreational vessels turn off the recreational vessel's engine while persons are in the water in close proximity to the rear of the vessel.* If an operator turned off a vessel's engine, persons in the water behind the vessel would not come into contact with a spinning propeller or inhale CO emitted from a running engine. ''Close proximity'' would be defined as when a person is either touching any part of the vessel or is close enough to touch any part of the vessel.

2. *A possible requirement to use longer boarding ladders on new recreational vessels.* A longer boarding ladder than what is currently used on most recreational vessels would make it less likely that the person boarding the vessel would use the lower unit in order to reach the ladder. As discussed above, if the propeller is spinning while a person is attempting to use the lower unit as a step, the person may either step directly onto the spinning propeller or slip off the lower unit of the propulsion system and fall onto the spinning propeller resulting in severe injuries and possibly death.

3. *A possible requirement to use boarding ladder or swim platform entrance gate ''interlocks'' on new recreational vessels.* Ladder or swim platform entrance gate ''interlocks'' would prevent a recreational vessel engine from starting if the boarding ladder was deployed or the swim platform entrance gate was not closed, thus preventing a person using a boarding ladder or swim platform from coming into contact with a spinning propeller.

C. Specific Information Sought

When responding to the questions below, please explain the reasoning behind your comment and provide data sources and citations.

1. We seek comments on measure number 1 described above that would require operators of recreational vessels to turn off the recreational vessel's engine while persons are in the water in close proximity to the rear of the vessel. We also seek comments regarding the potential meaning of ''close proximity'' for this proposal and whether there should be exemptions to any such proposed requirement to turn the vessel off. Should such a proposal closely mirror the State laws discussed above?

2. Are there scenarios, other than a person in the water in close proximity to the rear of the vessel, in which turning off the vessel's engine would similarly protect recreational boaters?

3. Would there be any adverse impacts to recreational vessels, recreational boaters, or the recreational boating experience by turning off the vessel's engine when a person is in the water in close proximity to the rear of the vessel or in other similar scenarios?

4. How should the Coast Guard consider the potential ''hassle factor'' associated with turning off the vessel's engine when a person is in the water in close proximity to the vessel?

5. What is the average number of times per trip a recreational vessel's engine would have to be turned off because of a person in close proximity to the vessel?

6. How effective would measure number 1 be in preventing accidents related to both propeller strikes and CO poisoning?

7. How would the challenge to visually inspect at a distance whether a person is in close proximity to a vessel affect compliance with any turn-the-vessel-off requirements?

8. What data or information exists that could be used to estimate compliance rates of measure number 1? What data

exists to estimate how such compliance will change during full implementation?

9. We seek comments on measure number 2 described above to require use of longer reboarding ladders. We understand that the American Boat and Yacht Council (ABYC) has a proposed revision to ABYC Standard H–41—Reboarding Means, Ladders, Handholds, Rails, and Lifelines, that would address longer ladders. Are there other consensus industry standards addressing longer ladders?

10. What percentage of new recreational vessels are sold with a swim ladder installed? What percentage of existing recreational vessels currently have a swim ladder installed? What is the typical length of a swim ladder that recreational vessel manufacturers currently install?

11. What are the costs for installation of a reboarding ladder?

12. What data or information exists that could be used to estimate compliance rates of measure number 2? What data exists to estimate how such compliance will change during full implementation?

13. We seek comments on measure number 3 described above to *require use of boarding ladder or swim platform entrance gate ''interlocks'' on new recreational vessels.* Are there any consensus industry standards addressing interlocks or any such standards in development?

14. What are the costs for installation of a boarding ladder or swim platform entrance gate interlock system? What are the costs associated with maintenance of these systems?

15. What data or information exists that could be used to estimate compliance rates of measure number 3? What data exists to estimate how such compliance will change during full implementation?

16. What is the risk of device failures or unintended activations of the boarding ladder or swim platform entrance gate interlocks? What is the current estimated rate of unintended activations? What are the impacts of unintended activations? Are there any injuries or fatalities associated with unintended activations?

17. What other measures or strategies would prevent propeller strike-related or CO poisoning-related casualties?

18. Since the enactment of the aforementioned State laws (CA, NV, OR, PA, WA), has there been a change in the count and rate of CO poisoning-related casualties in these States? Is there any quantitative data, measures, metrics, studies, or other related evidence on the effectiveness of these State laws?

19. Should any of the above-listed measures, or other measures or strategies to prevent propeller strike-related and CO poisoning-related casualties, be limited to specific recreational vessel types or lengths, or to some other criteria?

20. Would any of the above-listed specific measures have a significant economic impact on a substantial number of small entities? What sources of data or information exist detailing the economic impact on small entities which may result from the use of these specific measures to avoid propeller strike-related and CO poisoning-related casualties?

Dated: August 8, 2011.

James A. Watson,

Rear Admiral, U.S. Coast Guard, Director of Prevention Policy.

[FR Doc. 2011–21866 Filed 8–25–11; 8:45 am]

BILLING CODE 9110–04–P

ENVIRONMENTAL PROTECTION AGENCY

40 CFR Part 52

[EPA–R03–OAR–2011–0617; FRL–9457–1]

Approval and Promulgation of Air Quality Implementation Plans; Pennsylvania; Adhesives and Sealants Rule

AGENCY: Environmental Protection Agency (EPA).

ACTION: Proposed rule.

SUMMARY: EPA is proposing to approve State Implementation Plan (SIP) revision submitted by the Commonwealth of Pennsylvania. The SIP revision pertains to amendments to 25 *Pennsylvania Code* (*Pa. Code*) Chapters 121, 129, and 130, relating to control of emissions of volatile organic compounds (VOC) from the manufacture, sale, use, or application of adhesives, sealants, primers, and solvents. The revision also amends related definitions. This action is being taken under the Clean Air Act (CAA).

DATES: Written comments must be received on or before September 26, 2011.

ADDRESSES: Submit your comments, identified by Docket ID Number EPA–R03–OAR–2011–0617 by one of the following methods:

A. *http://www.regulations.gov.* Follow the on-line instructions for submitting comments.

B. *E-mail: fernandez.cristina@epa.gov.*

C. *Mail:* EPA–R03–OAR–2011–0617, Cristina Fernandez, Associate Director, Office of Air Program Planning, Mailcode 3AP30, U.S. Environmental Protection Agency, Region III, 1650 Arch Street, Philadelphia, Pennsylvania 19103.

D. *Hand Delivery:* At the previously-listed EPA Region III address. Such deliveries are only accepted during the Docket's normal hours of operation, and special arrangements should be made for deliveries of boxed information.

Instructions: Direct your comments to Docket ID Number EPA–R03–OAR–2011–0617. EPA's policy is that all comments received will be included in the public docket without change, and may be made available online at *http://www.regulations.gov,* including any personal information provided, unless the comment includes information claimed to be Confidential Business Information (CBI) or other information whose disclosure is restricted by statute. Do not submit information that you consider to be CBI or otherwise protected through *http://www.regulations.gov* or e-mail. The *http://www.regulations.gov* Web site is an ''anonymous access'' system, which means EPA will not know your identity or contact information unless you provide it in the body of your comment. If you send an e-mail comment directly to EPA without going through *http://www.regulations.gov,* your e-mail address will be automatically captured and included as part of the comment that is placed in the public docket and made available on the Internet. If you submit an electronic comment, EPA recommends that you include your name and other contact information in the body of your comment and with any disk or CD–ROM you submit. If EPA cannot read your comment due to technical difficulties and cannot contact you for clarification, EPA may not be able to consider your comment. Electronic files should avoid the use of special characters, any form of encryption, and be free of any defects or viruses.

Docket: All documents in the electronic docket are listed in the *http://www.regulations.gov* index. Although listed in the index, some information is not publicly available, *i.e.,* CBI or other information whose disclosure is restricted by statute. Certain other material, such as copyrighted material, is not placed on the Internet and will be publicly available only in hard copy form. Publicly available docket materials are available either electronically in *http://www.regulations.gov* or in hard copy during normal business hours at the Air Protection Division, U.S. Environmental Protection Agency, Region III, 1650

Arch Street, Philadelphia, Pennsylvania 19103. Copies of the State submittal are available at the Pennsylvania Department of Environmental Protection, Bureau of Air Quality Control, P.O. Box 8468, 400 Market Street, Harrisburg, Pennsylvania 17105.

FOR FURTHER INFORMATION CONTACT: Gregory Becoat, (215) 814–2036, or by e-mail at *becoat.gregory@epa.gov.*

SUPPLEMENTARY INFORMATION: On January 12, 2011, the Pennsylvania Department of Environmental Protection (PADEP) submitted a revision to the Pennsylvania SIP. The SIP revision consists of Pennsylvania's amendments to 25 *Pa. Code* Chapters 121, 129, and 130 relating to general provisions, standards for sources, and standards for products. The amendments are part of Pennsylvania's strategy to achieve and maintain the 8-hour ozone national ambient air quality standard (NAAQS) throughout the Commonwealth.

The SIP revision consists of the following amendments:

A. Amendments to 25 Pa. Code Chapter 121—General Provisions

The amendments to section 121.1—Definitions, add definitions for 53 new terms, including those that relate to the adhesive, sealant, primer, and solvent product categories regulated under section 129.77 and Chapter 130, Subchapter D and amends definitions for 9 existing terms for clarity, style, and format or to explain new product categories.

B. Amendments to 25 Pa. Code Chapter 129—Standards for Sources of VOCs

The revision amends section 129.51(a)—Equivalency, in order to include adhesives, sealants, primers, and solvents covered by section 129.77, entitled ''Control of emissions from the use or application of adhesives, sealants, primers and solvents.'' Section 129.51(a) provides an alternative method for owners and operators of facilities to achieve compliance with air emission limits.

The Ozone Transport Commission (OTC) states developed a model rule ''OTC Model Rule For Adhesives and Sealants'' dated 2006 which was based on the 1998 California Air Resources Board (CARB) reasonably available control technology (RACT) determination. This RACT determination applied to both the manufacture and use of adhesives, sealants, adhesive primers, or sealant primers, in both industrial and manufacturing facilities and in the field. California Air Districts used this determination to develop regulations for this category. EPA addressed this source category with a Control Techniques Guideline (CTG) document for Miscellaneous Industrial Adhesives dated September 2008. This CTG was developed in response to section 183(e) of the CAA requirement for EPA to study and regulate consumer and commercial products, which is included in EPA's Report to Congress, ''Study of Volatile Organic Compound Emissions from Consumer and Commercial Products—Comprehensive Emissions Inventory.''

The miscellaneous industrial adhesives category was limited to adhesives and adhesive primers used in industrial and manufacturing operations and did not include products applied in the field. Therefore, the OTC model rule and state efforts in developing individual regulations preceded EPA's CTG for this source category and were broader in applicability.

The new section 129.77 adds regulations that: (a) Set standards for the application of adhesives, sealants, adhesive primers, and sealant primers by providing options for appliers either to use a product with a VOC content equal to or less than a specified limit or to use add-on controls; (b) establish that owners or operators may not use or apply at the facility an adhesive, sealant, adhesive primer, sealant primer, surface preparation, or cleanup solvent that exceeds the VOC content limits; (c) specify requirements for owners or operators of a facility that uses or applies a surface preparation solvent or cleanup solvent or removes an adhesive, sealant, adhesive primer, and sealant primer from the parts of spray application equipment; (d) provide for an alternative add-on control system requirement of at least 85 percent overall control efficiency (capture and destruction), by weight; (e) specify requirements for proper storage and disposal, work practices, surface preparation, and cleanup solvent composition; and (f) specify exemptions, as well as registration and product labeling requirements, recordkeeping requirements, and test methods and compliance procedures.

C. Amendments to 25 Pa. Code Chapter 130 Subchapter D—Adhesives, Sealants, Primers, and Solvents General Provisions

The new 25 *Pa. Code* Chapter 130 Subchapter D adds regulations that: (a) Set emission standards and VOC content limits for the sale, supply, offer for sale, manufacture, use, or application of adhesive, sealant, adhesive primer, and sealant primer products; (b) set emission standards and VOC content limits for the sale, supply, offer for sale, manufacture, use, or application sealant products applied to certain substrates, surface preparation solvents, and cleanup solvents; (c) establish requirements for surface preparation solvent or cleanup solvent, removal methods, and proper storage and disposal; (d) establish that a person may not solicit the use of a product if application would result in a violation of the applicable VOC content limit; (e) specify exemptions for an adhesive, sealant, adhesive primer, or sealant primer product; and (f) specify recordkeeping requirements, test methods, registration, and product labeling requirements and compliance procedures.

A detailed summary of EPA's review of and rationale for proposing to approve this SIP revision may be found in the Technical Support Document (TSD) for this action which is available on-line at *http://www.regulations.gov,* Docket number EPA–R03–OAR–2011–0617.

III. Proposed Action

EPA is proposing to approve the Pennsylvania SIP revision amending section 121.1 ''Definitions'' and section 129.51(a) ''Equivalency'' of 25 *Pa. Code* Chapter 129. EPA is also proposing to approve the Pennsylvania SIP revisions adding section 129.77 ''Control of emissions from the use or application of adhesives, sealants, primers, and solvents'' of 25 *Pa. Code* Chapter 129 and 25 *Pa. Code* Chapter 130 Subchapter D ''Adhesives, Sealants, Primers, and Solvents General Provisions.'' EPA is soliciting public comments on the issues discussed in this document. These comments will be considered before taking final action.

IV. Statutory and Executive Order Reviews

Under the CAA, the Administrator is required to approve a SIP submission that complies with the provisions of the CAA and applicable Federal regulations. 42 U.S.C. 7410(k); 40 CFR 52.02(a). Thus, in reviewing SIP submissions, EPA's role is to approve state choices, provided that they meet the criteria of the CAA. Accordingly, this action merely proposes to approve state law as meeting Federal requirements and does not impose additional requirements beyond those imposed by state law. For that reason, this proposed action:

- Is not a ''significant regulatory action'' subject to review by the Office of Management and Budget under Executive Order 12866 (58 FR 51735, October 4, 1993);

• Does not impose an information collection burden under the provisions of the Paperwork Reduction Act (44 U.S.C. 3501 *et seq.*);

• Is certified as not having a significant economic impact on a substantial number of small entities under the Regulatory Flexibility Act (5 U.S.C. 601 *et seq.*);

• Does not contain any unfunded mandate or significantly or uniquely affect small governments, as described in the Unfunded Mandates Reform Act of 1995 (Pub. L. 104–4);

• Does not have Federalism implications as specified in Executive Order 13132 (64 FR 43255, August 10, 1999);

• Is not an economically significant regulatory action based on health or safety risks subject to Executive Order 13045 (62 FR 19885, April 23, 1997);

• Is not a significant regulatory action subject to Executive Order 13211 (66 FR 28355, May 22, 2001);

• Is not subject to requirements of Section 12(d) of the National Technology Transfer and Advancement Act of 1995 (15 U.S.C. 272 note) because application of those requirements would be inconsistent with the CAA; and

• Does not provide EPA with the discretionary authority to address, as appropriate, disproportionate human health or environmental effects, using practicable and legally permissible methods, under Executive Order 12898 (59 FR 7629, February 16, 1994).

In addition, this proposed rule, pertaining to Pennsylvania's control of VOCs from adhesives and sealants, does not have Tribal implications as specified by Executive Order 13175 (65 FR 67249, November 9, 2000), because the SIP is not approved to apply in Indian country located in the state, and EPA notes that it will not impose substantial direct costs on Tribal governments or preempt Tribal law.

List of Subjects in 40 CFR Part 52

Environmental protection, Air pollution control, Ozone, Reporting and recordkeeping requirements, Volatile organic compounds.

Authority: 42 U.S.C. 7401 *et seq.*

Dated: August 11, 2011.

W.C. Early,

Acting Regional Administrator, Region III.

[FR Doc. 2011–21936 Filed 8–25–11; 8:45 am]

BILLING CODE 6560–50–P

ENVIRONMENTAL PROTECTION AGENCY

40 CFR Parts 60 and 63

[EPA–HQ–OAR–2010–0505; FRL–9456–2]

RIN 2060–AP76

Oil and Natural Gas Sector: New Source Performance Standards and National Emission Standards for Hazardous Air Pollutants Reviews

AGENCY: Environmental Protection Agency (EPA).

ACTION: Proposed rule; Announcement of public hearings.

SUMMARY: The EPA published in the **Federal Register** on August 23, 2011, the proposed rule, ''Oil and Natural Gas Sector: New Source Performance Standards and National Emission Standards for Hazardous Air Pollutants Reviews.'' The EPA is announcing three public hearings to be held for the proposed rule.

DATES: The public hearings will be held on September 27, 2011, September 28, 2011, and September 29, 2011.

ADDRESSES: The public hearings will be held on September 27, 2011, in Pittsburgh, Pennsylvania, September 28, 2011, in Denver, Colorado, and September 29, 2011, in Arlington, Texas. The September 27, 2011, public hearing will be held at the David L. Lawrence Convention Center in Rooms 315–316, located at 1000 Ft. Duquesne Blvd., Pittsburgh, Pennsylvania 15222; telephone: (412) 565–6000. The September 28, 2011, public hearing will be held at the Colorado Convention Center in Room 207, located at 700 14th Street, Denver, Colorado 80202; telephone: (303) 228–8000. The September 29, 2011, public hearing will be held at the Arlington Municipal Building in the City Council Chambers located at 101 W. Abram Street, Arlington, Texas 76010; telephone: (817) 459–6122.

The three public hearings will convene at 9 a.m. and will continue until 8 p.m. (local time). The EPA will make every effort to accommodate all speakers that arrive and register before 8 p.m. A lunch break is scheduled from 12:30 p.m. until 2 p.m. and a dinner break is scheduled from 5 p.m. until 6:30 p.m. The EPA's Web site for the rulemaking, which includes the proposal and information about the hearings, can be found at: *http://www.epa.gov/airquality/oilandgas/.*

FOR FURTHER INFORMATION CONTACT: If you would like to present oral testimony at the public hearing, please contact Ms. Joan C. Rogers, U.S. Environmental Protection Agency, Office of Air Quality Planning and Standards, Sector Policies and Programs Division (E143–03), Research Triangle Park, North Carolina 27711; telephone: (919) 541–4487; fax number: (919) 541–3470; e-mail address: *rogers.joanc@epa.gov* (preferred method for registering), no later than by 4 p.m. (Eastern Standard Time), 2 business days prior to each hearing. The last day to register to present oral testimony in advance will be Friday, September 23, 2011, for the Pittsburgh, Pennsylvania, public hearing; Monday, September 26, 2011, for the Denver, Colorado, public hearing; and Tuesday, September 27, 2011, for the Arlington, Texas, public hearing. If using e-mail, please provide the following information: The time you wish to speak (morning, afternoon or evening), name, affiliation, address, e-mail address and telephone and fax numbers. Time slot preferences will be given in the order requests are received. Requests to speak will be taken the day of each of the hearings at the hearing registration desk, although preferences on speaking times may not be able to be fulfilled. If you will require the service of a translator, please let us know at the time of registration.

Questions concerning the August 23, 2011 (76 FR 52738), proposed rule should be addressed to Bruce Moore, Office of Air Quality Planning and Standards, Sector Policies and Programs Division (E143–05), Environmental Protection Agency, Research Triangle Park, North Carolina 27711; telephone number: (919) 541–5460; facsimile number: (919) 541–3470; e-mail address: *moore.bruce@epa.gov.*

Public hearing: The proposal for which the EPA is holding the public hearings was published in the **Federal Register** on Tuesday, August 23, 2011 (76 FR 52738), and is available at: *http://www.epa.gov/airquality/oilandgas/* and also in the docket identified below. The public hearings will provide interested parties the opportunity to present oral comments regarding the EPA's proposed standards, including data, views or arguments concerning the proposal. The EPA may ask clarifying questions during the oral presentations, but will not respond to the presentations at that time. Written statements and supporting information submitted during the comment period will be considered with the same weight as any oral comments and supporting information presented at the public hearing.

Commenters should notify Ms. Rogers if they will need specific equipment or if there are other special needs related to providing comments at the public hearings. The EPA will provide

equipment for commenters to show overhead slides or make computerized slide presentations if we receive special requests in advance. Oral testimony will be limited to 5 minutes for each commenter. The EPA encourages commenters to provide the EPA with a copy of their oral testimony electronically (via e-mail or CD) or in hard copy form.

The public hearing schedules, including lists of speakers, will be posted on the EPA's Web site at *http://www.epa.gov/airquality/oilandgas/.* Verbatim transcripts of the hearings and written statements will be included in the docket for the rulemaking. The EPA will make every effort to follow the schedule as closely as possible on the day of the hearings; however, please plan for the hearing to run either ahead of schedule or behind schedule.

How can I get copies of this document and other related information?

The EPA has established a docket for the proposed rule, ''Oil and Natural Gas Sector: New Source Performance Standards and National Emission Standards for Hazardous Air Pollutants Reviews,'' under No. EPA–HQ–OAR–2010–0505, available at *http://www.regulations.gov.*

List of Subjects

40 CFR Part 60

Environmental protection, Administrative practice and procedure, Air pollution control, Intergovernmental relations, Reporting and recordkeeping requirements.

40 CFR Part 63

Environmental protection, Administrative practice and procedure, Air pollution control, Hazardous substances, Intergovernmental relations, Reporting and recordkeeping requirements.

Dated: August 19, 2011.

Mary Henigin,

Acting Director, Office of Air Quality Planning and Standards.

[FR Doc. 2011–21726 Filed 8–25–11; 8:45 am]

BILLING CODE 6560–50–P

ENVIRONMENTAL PROTECTION AGENCY

40 CFR Part 180

[EPA–HQ–OPP–2011–0082; FRL–8884–9]

Receipt of Several Pesticide Petitions Filed for Residues of Pesticide Chemicals in or on Various Commodities

AGENCY: Environmental Protection Agency (EPA).

ACTION: Notice of filing of petitions and request for comment.

SUMMARY: This document announces the Agency's receipt of several initial filings of pesticide petitions requesting the establishment or modification of regulations for residues of pesticide chemicals in or on various commodities.

DATES: Comments must be received on or before September 26, 2011.

ADDRESSES: Submit your comments, identified by docket identification (ID) number and the pesticide petition number (PP) of interest as shown in the body of this document, by one of the following methods:

- *Federal eRulemaking Portal: http://www.regulations.gov.* Follow the on-line instructions for submitting comments.
- *Mail:* Office of Pesticide Programs (OPP) Regulatory Public Docket (7502P), Environmental Protection Agency, 1200 Pennsylvania Ave., NW., Washington, DC 20460–0001.
- *Delivery:* OPP Regulatory Public Docket (7502P), Environmental Protection Agency, Rm. S–4400, One Potomac Yard (South Bldg.), 2777 S. Crystal Dr., Arlington, VA. Deliveries are only accepted during the Docket Facility's normal hours of operation (8:30 a.m. to 4 p.m., Monday through Friday, excluding legal holidays). Special arrangements should be made for deliveries of boxed information. The Docket Facility telephone number is (703) 305–5805.

Instructions: Direct your comments to the docket ID number and the pesticide petition number of interest as shown in the body of this document. EPA's policy is that all comments received will be included in the docket without change and may be made available on-line at *http://www.regulations.gov,* including any personal information provided, unless the comment includes information claimed to be Confidential Business Information (CBI) or other information whose disclosure is restricted by statute. Do not submit information that you consider to be CBI or otherwise protected through regulations.gov or e-mail. The regulations.gov Web site is an ''anonymous access'' system, which means EPA will not know your identity or contact information unless you provide it in the body of your comment. If you send an e-mail comment directly to EPA without going through regulations.gov, your e-mail address will be automatically captured and included as part of the comment that is placed in the docket and made available on the Internet. If you submit an electronic comment, EPA recommends that you include your name and other contact information in the body of your comment and with any disk or CD–ROM you submit. If EPA cannot read your comment due to technical difficulties and cannot contact you for clarification, EPA may not be able to consider your comment. Electronic files should avoid the use of special characters, any form of encryption, and be free of any defects or viruses.

Docket: All documents in the docket are listed in the docket index available at *http://www.regulations.gov.* Although listed in the index, some information is not publicly available, *e.g.,* CBI or other information whose disclosure is restricted by statute. Certain other material, such as copyrighted material, is not placed on the Internet and will be publicly available only in hard copy form. Publicly available docket materials are available either in the electronic docket at *http://www.regulations.gov,* or, if only available in hard copy, at the OPP Regulatory Public Docket in Rm. S–4400, One Potomac Yard (South Bldg.), 2777 S. Crystal Dr., Arlington, VA. The hours of operation of this Docket Facility are from 8:30 a.m. to 4 p.m., Monday through Friday, excluding legal holidays. The Docket Facility telephone number is (703) 305–5805.

FOR FURTHER INFORMATION CONTACT: A contact person, with telephone number and e-mail address, is listed at the end of each pesticide petition summary. You may also reach each contact person by mail at Registration Division (7505P), Office of Pesticide Programs, Environmental Protection Agency, 1200 Pennsylvania Ave., NW., Washington, DC 20460–0001.

SUPPLEMENTARY INFORMATION:

I. General Information

A. Does this action apply to me?

You may be potentially affected by this action if you are an agricultural producer, food manufacturer, or pesticide manufacturer. Potentially affected entities may include, but are not limited to:

- Crop production (NAICS code 111).

• Animal production (NAICS code 112).
• Food manufacturing (NAICS code 311).
• Pesticide manufacturing (NAICS code 32532).

This listing is not intended to be exhaustive, but rather provides a guide for readers regarding entities likely to be affected by this action. Other types of entities not listed in this unit could also be affected. The North American Industrial Classification System (NAICS) codes have been provided to assist you and others in determining whether this action might apply to certain entities. If you have any questions regarding the applicability of this action to a particular entity, consult the person listed at the end of the pesticide petition summary of interest.

B. What should I consider as I prepare my comments for EPA?

1. *Submitting CBI.* Do not submit this information to EPA through regulations.gov or e-mail. Clearly mark the part or all of the information that you claim to be CBI. For CBI information in a disk or CD–ROM that you mail to EPA, mark the outside of the disk or CD–ROM as CBI and then identify electronically within the disk or CD–ROM the specific information that is claimed as CBI. In addition to one complete version of the comment that includes information claimed as CBI, a copy of the comment that does not contain the information claimed as CBI must be submitted for inclusion in the public docket. Information so marked will not be disclosed except in accordance with procedures set forth in 40 CFR part 2.

2. *Tips for preparing your comments.* When submitting comments, remember to:

i. Identify the document by docket ID number and other identifying information (subject heading, **Federal Register** date and page number).

ii. Follow directions. The Agency may ask you to respond to specific questions or organize comments by referencing a Code of Federal Regulations (CFR) part or section number.

iii. Explain why you agree or disagree; suggest alternatives and substitute language for your requested changes.

iv. Describe any assumptions and provide any technical information and/or data that you used.

v. If you estimate potential costs or burdens, explain how you arrived at your estimate in sufficient detail to allow for it to be reproduced.

vi. Provide specific examples to illustrate your concerns and suggest alternatives.

vii. Explain your views as clearly as possible, avoiding the use of profanity or personal threats.

viii. Make sure to submit your comments by the comment period deadline identified.

3. *Environmental justice.* EPA seeks to achieve environmental justice, the fair treatment and meaningful involvement of any group, including minority and/or low-income populations, in the development, implementation, and enforcement of environmental laws, regulations, and policies. To help address potential environmental justice issues, the Agency seeks information on any groups or segments of the population who, as a result of their location, cultural practices, or other factors, may have atypical or disproportionately high and adverse human health impacts or environmental effects from exposure to the pesticides discussed in this document, compared to the general population.

II. What action is the agency taking?

EPA is announcing its receipt of several pesticide petitions filed under section 408 of the Federal Food, Drug, and Cosmetic Act (FFDCA), 21 U.S.C. 346a, requesting the establishment or modification of regulations in 40 CFR part 174 or part 180 for residues of pesticide chemicals in or on various food commodities. The Agency is taking public comment on the requests before responding to the petitioners. EPA is not proposing any particular action at this time. EPA has determined that the pesticide petitions described in this document contain the data or information prescribed in FFDCA section 408(d)(2); however, EPA has not fully evaluated the sufficiency of the submitted data at this time or whether the data support granting of the pesticide petitions. After considering the public comments, EPA intends to evaluate whether and what action may be warranted. Additional data may be needed before EPA can make a final determination on these pesticide petitions.

Pursuant to 40 CFR 180.7(f), a summary of each of the petitions that are the subject of this document, prepared by the petitioner, is included in a docket EPA has created for each rulemaking. The docket for each of the petitions is available on-line at *http://www.regulations.gov.*

As specified in FFDCA section 408(d)(3), (21 U.S.C. 346a(d)(3)), EPA is publishing notice of the petition so that the public has an opportunity to comment on this request for the establishment or modification of regulations for residues of pesticides in or on food commodities. Further information on the petition may be obtained through the petition summary referenced in this unit.

New Tolerance

1. *PP 1E7823.* (EPA–HQ–OPP–2011–0113). Taminco, Inc., Two Windsor Plaza, Suite 411, Allentown, PA, requests to establish a tolerance in 40 CFR part 180 for residues of the fungicide thiram, in or on avocado at 8 parts per million (ppm). Detection and quantitation for thiram (as carbon disulfide (CS2)) were conducted using a gas chromatograph (GC) equipped with a mass spectral detector for determination of CS2. The limit of quantitation (LOQ) was 0.05 ppm reported CS2 evolved. Contact: Shaunta Hill, (703) 347–8961, e-mail address: *hill.shaunta@epa.gov.*

2. *PP 1E7882.* (EPA–HQ–OPP–2011–0569). Interregional Research Project Number 4 (IR–4), 500 College Rd. East, Suite 201W, Princeton, NJ 08540, requests to establish tolerances in 40 CFR part 180 for residues of the herbicide clopyralid: (3,6-dichloro-2-pyrindinecarboxylic acid), in or on apple at 0.05 ppm; brassica, leafy greens, subgroup 5B at 5.0 ppm; rapeseed subgroup 20A, except gold of pleasure, seed at 3.0 ppm; rapeseed subgroup 20A, except gold of pleasure, meal at 6.0 ppm; and rapeseed subgroup 20A, except gold of pleasure, forage at 3.0 ppm. An adequate analytical method is available for enforcement of the tolerance expression in or on these commodities. Dow AgroSciences Method No. ACR 79.5 was utilized to determine residues of clopyralid in apples, fruits and apple fractions in support of the proposed tolerance. This method determines clopyralid as the methyl ester by gas chromatography using electron capture detection (GC/ECD). This method has been successfully validated by EPA and has been published in FDA's Pesticide Analytical Manual, Volume II (PAM II). Contact: Laura Nollen, (703) 305–7390, e-mail address: *nollen.laura@epa.gov.*

3. *PP 1E7883.* (EPA–HQ–OPP–2011–0563). Interregional Research Project Number 4 (IR–4), 500 College Rd. East, Suite 201W, Princeton, NJ 08540, requests to establish tolerances in 40 CFR part 180 for residues of the herbicide rimsulfuron: *N*-((4,6-dimethoxypyrimidin-2-yl) aminocarbonyl)-3-(ethylsulfonyl)-2-pyridinesulfonamide, in or on chicory, roots at 0.01 ppm and chicory, tops at 0.01 ppm. Adequate analytical methodology, high-pressure liquid chromatography (HPLC) with electrospray ionization-tandem mass

spectrometry (ESI–MS/MS) detection, is available for enforcement purposes. Contact: Andrew Ertman, (703) 308–9367, e-mail address: *ertman.andrew@epa.gov.*

4. *PP 1E7885.* (EPA–HQ–OPP–2011–0564). Interregional Research Project Number 4 (IR–4), 500 College Rd. East, Suite 201W, Princeton, NJ 08540, requests to establish tolerances in 40 CFR part 180 for residues of the herbicide thifensulfuron methyl [Methyl-3-[[[[(4-methoxy-6-methyl-1,3,5-triazin-2-yl) amino]carbonyl]amino] sulfonyl]-2-thiophenecarboxylate], in or on chicory, roots at 0.01 ppm and chicory, tops at 0.01 ppm, for each analyte. Adequate analytical methodology, HPLC with ESI–MS/MS detection, is available for enforcement purposes. Contact: Andrew Ertman, (703) 308–9367, e-mail address: *ertman.andrew@epa.gov.*

5. *PP 0F7805.* (EPA–HQ–OPP–2010–1079). Syngenta Crop Protection, Inc., Syngenta Crop Protection, Inc., P.O. Box 18300, Greensboro, NC 27419, requests to establish tolerances in 40 CFR part 180 for residues of the insecticide thiamethoxam [3-[(2-chloro-5-thiazolyl)methyl]tetrahydro-5-methyl-*N*-nitro-4*H*-1,3,5-oxadiazin-4-imine] (CAS Reg. No. 153719–23–4) and its metabolite [*N*-(2-chloro-thiazol-5-ylmethyl)-*N'*-methyl-*N'*-nitro-guanidine], in or on buckwheat, grain at 0.02 ppm; buckwheat, forage at 0.50 ppm; buckwheat, hay at 0.02 ppm; buckwheat, straw at 0.02 ppm; oat, grain at 0.02 ppm; oat, forage at 0.50 ppm, oat, hay at 0.02 ppm; oat, straw at 0.02 ppm; pearl millet, grain at 0.02 ppm; pearl millet, forage at 0.02 ppm; pearl millet, stover at 0.02 ppm; proso millet, grain at 0.02 ppm; proso millet, forage at 0.02 ppm; proso millet, stover at 0.02 ppm; proso millet, straw at 0.02 ppm; rye, grain at 0.02 ppm; rye, forage at 0.50 ppm; rye, straw at 0.02 ppm; teosinte, grain at 0.02 ppm; teosinte, forage at 0.10 ppm; teosinte, stover at 0.05 ppm; triticale, grain at 0.02 ppm; triticale, forage at 0.05 ppm; triticale, hay at 0.02 ppm; triticale, straw at 0.02 ppm; wild rice, grain at 0.02 ppm. This revised Notice of Filing is an amendment to reflect specific proposed grain tolerance and their respective animal feed commodities listed in the revised Section F of the tolerance petition, PP0F7805. Syngenta Crop Protection, Inc. has submitted practical analytical methodology for detecting and measuring levels of thiamethoxam in or on raw agricultural commodities. This method is based on crop specific cleanup procedures and determination by liquid chromatography with either ultraviolet (UV) or MS detections. Contact: Gene Benbow, (703) 347–0235, e-mail address: *benbow.gene@epa.gov.*

6. *PP 1F7873.* (EPA–HQ–OPP–2011–0578). E. I. du Pont de Nemours and Company, 1007 Market St., Wilmington, DE 19898–0001, requests to establish tolerances in 40 CFR part 180 for residues of the combined residues of the insecticide indoxacarb, [(S)-methyl-7-chloro-2,5-dihydro-2-[[(methoxycarbonyl) [4-(trifluoromethoxy)-phenyl]amino]carbonyl]indeno[1,2e] [1,3,4]oxadiazine-4a(3H)-carboxylate], its R-enantiomer [(R)-methyl 7-chloro-2,5-dihydro-2-[[(methoxycarbonyl) [4-(trifluoromethoxy) phenyl]amino]carbonyl]indeno [1,2-e] [1,3,4] oxadiazine-4a(3H)-carboxylate] and the metabolites:

- IN–JT333: Methyl 7-chloro-2,5-dihydro-2-[[[4-(trifluoromethoxy)phenyl]-amino]carbonyl]indeno[1,2-e][1,3,4]oxadiazine-4a(3H)-carboxylate
- IN–KT319: (E)-methyl 5-chloro-2,3,-dihydro-2-hydroxy-1-[[[(methoxycarbonyl)[4-(trifluoromethoxy)phenyl]amino]-carbonyl]hydrazono]-1H-indene-2-carboxylate
- IN–JU873: Methyl 5-chloro-2,3-dihydro-2-hydroxy-1-[[[[4-(triflurormethoxy)-phenyl] amino]carbonyl]hydrazono]-1H-indene-2-carboxylate
- IN–KG433: Methyl 5-chloro-2,3,-dihydro-2-hydroxy-1-[[[(methoxycarbonyl)[4-(trifluoromethoxy)phenyl]amino] carbonyl]-hydrazono]-1H-indene-2-carboxylate, and
- IN–KB687: Methyl [4-(trifluoromethoxy)phenyl]carbamate, in or on egg at 0.2 ppm; poultry, fat at 0.2 ppm; poultry, meat at 0.06 ppm; and poultry, meat byproducts at 0.06 ppm.

The plant residue enforcement method detects and quantitates indoxacarb in various matrices including sweet corn, lettuce, tomato, broccoli, apple, grape, cottonseed, tomato, peanut, and soybean commodity samples by HPLC UV. The limit of quantitation in the method allows monitoring of crops with indoxacarb residues at or above the levels proposed in these tolerances. Contact: Julie Chao, (703) 308–8735, e-mail address: *chao.julie@epa.gov.*

7. *PP 1F7886.* (EPA–HQ–OPP–2011–0593). Valent U.S.A. Corporation, 1600 Riviera Ave., Suite 200, Walnut Creek, CA 94596, requests to establish a tolerance in 40 CFR part 180 for residues of the herbicide flumioxazin, 2-[7-fluoro-3,4-dihydro-3-oxo-4-(2-propynyl)-2H–1,4-benzoxazin-6-yl]-4,5,6,7-tetrahydro-1H-isoindole-1,3(2H)-dione, in or on pea and bean (except soybean), dried shelled, crop subgroup 6C at 0.1 ppm for seed; rapeseed, crop subgroup 20A at 0.35 ppm for seed; rapeseed, crop subgroup 20A at 0.04 ppm for meal; and rapeseed, crop subgroup 20A at 0.02 ppm for refined oil; sunflower, crop subgroup 20B at 0.5 ppm for seed; sunflower, crop subgroup 20B at 0.03 ppm for meal; sunflower, crop subgroup 20B at 0.02 ppm for refined oil; wheat at 0.35 ppm for grain; wheat at 5 ppm for straw; wheat at 0.02 ppm for forage (pre-emergence); wheat at 0.02 ppm for hay (pre-emergence); wheat at 0.35 ppm for bran; wheat at 0.05 ppm for flour; wheat at 0.35 ppm for germ; wheat at 0.08 ppm for middlings; wheat at 0.11 ppm for shorts; and wheat at 110 ppm for aspirated grain fractions. Practical analytical methods for detecting and measuring levels of flumioxazin have been developed and validated in/on all appropriate agricultural commodities and respective processing fractions. The LOQ of flumioxazin in the methods is 0.02 ppm which will allow monitoring of food with residues at the levels proposed for the tolerances. Contact: Bethany Benbow, (703) 347–8072, e-mail address: *benbow.bethany@epa.gov.*

Amended Tolerance

1. *PP 1E7882.* (EPA–HQ–OPP–2011–0569). Interregional Research Project Number 4 (IR–4), 500 College Rd. East, Suite 201W, Princeton, NJ 08540, requests to remove the tolerances in 40 CFR 180.431 for residues of the herbicide clopyralid: (3,6-dichloro-2-pyrindinecarboxylic acid), in or on canola, seed at 3.0 ppm; canola, meal at 6.0 ppm; flax, seed at 3.0 ppm; flax, meal at 6.0 ppm; rapeseed, seed at 3.0 ppm; rapeseed, forage at 3.0 ppm; and mustard greens at 5.0 ppm upon the approval of the aforementioned tolerances under ''New Tolerance''. Contact: Laura Nollen, (703) 305–7390, e-mail address: *nollen.laura@epa.gov.*

2. *PP 1F7886.* (EPA–HQ–OPP–2011–0593). Valent U.S.A. Corporation, 1600 Riviera Ave., Suite 200, Walnut Creek, CA 94596, requests to remove the tolerances in 40 CFR 180.568 for residues of the herbicide flumioxazin, 2-[7-fluoro-3,4dihydro-3-oxo-4-(2-propynyl)-2H–1,4-benzoxazin-6-yl]-4,5,6,7-tetrahydro-1H-isoindole1,3(2H)-dione, in or on beans, dry seed at 0.05 ppm upon the approval of the tolerance on Crop Subgroup 6C under ''New Tolerance''. Contact: Bethany Benbow, (703) 347–8072, e-mail address: *benbow.bethany@epa.gov.*

New Tolerance Exemption

1. *PP* 1E7858. (EPA–HQ–OPP–2011–0525). Joint Inerts Task Force, Cluster

Support Team 5, EPA Company Number 84941, c/o CropLife America, 1156 15th St., NW., Suite 400, Washington, DC 20005, requests to establish an exemption from the requirement of a tolerance for residues of following descriptor and compounds under 40 CFR 180.910 pre- and post-harvest uses not to exceed 7% in pesticide formulations when used as a pesticide inert: [[α]-[p-(1,1,3,3-Tetramethylbutyl)phenyl]-[ω]-hydroxypoly (oxyethylene) produced by the condensation of 1 mole of p-(1,1,3,3-tetramethylbutyl) phenol with a range of 1–14 or 30–70 moles of ethylene oxide: If a blend of products is used, the average range number of moles of ethylene oxide reacted to produce any product that is a component of the blend shall be in the range of 1–14 or 30–70 (Chemical Name (CAS No.)): Poly (oxy-1, 2-ethanediyl), α-[4-(1,1,3,3-tetramethylbutyl) phenyl]-ω-hydroxy- (9036–19–5); Poly (oxy-1, 2-ethanediyl), α-[4-(1,1,3,3-tetramethylbutyl) phenyl]-ω-hydroxy-] (9002–93–1). The petitioner believes no analytical method is needed because this information is not required for the establishment of a tolerance exemption. Contact: Kerry Leifer, (703) 308–8811, e-mail address: *leifer.kerry@epa.gov.*

2. *PP* 1E7860. (EPA–HQ–OPP–2011–0526). Joint Inerts Task Force, Cluster Support Team 9, EPA Company Number 84943, c/o CropLife America, 1156 15th St., NW., Suite 400, Washington, DC 20005, requests to establish an exemption from the requirement of a tolerance for residues of Nonylphenol Ethoxylate Phosphate and Sulfate Derivatives (NPEPSD) under the following descriptors and compounds under 40 CFR 180.910 (pre- and post-harvest uses) and 40 CFR 180.930 (animal uses) not to exceed 7% in pesticide formulations when used as a pesticide inert ingredient:

NPE Phosphate Derivatives (NPEPD): α-(p-Nonylphenyl)-ω-hydroxypoly(oxyethylene) mixture of dihydrogen phosphate and mono hydrogen phosphate esters and the corresponding ammonium, calcium, magnesium, monoethanolamine, potassium, sodium, and zinc salts of the phosphate esters; the nonyl group is a propylene trimer isomer and the poly(oxyethylene) content averages 4–14 moles or 30 moles (Chemical Name (CAS No.)): Poly (oxy-1, 2-ethanediyl), α-(nonylphenyl)-ω-hydroxy-, phosphate (51811–79–1); Ethanol, 2-amino-, compd. with α-(nonylphenyl)-ω-hydroxypoly(oxy-1,2-ethanediyl) phosphate (59139–23–0); Poly(oxy-1,2-ethanediyl), α-(nonylphenyl)-ω-hydroxy-, phosphate, magnesium salt Poly(oxy-1,2-ethanediyl), α-(nonylphnyl)-ω-hydroxy-, phosphate, magnesium salt (67922–57–0); Poly(oxy-1,2-ethanediyl), α-(4-nonylphenyl)-ω-hydroxy-, phosphate, sodium salt (68412–53–3); Poly(oxy-1,2-ethanediyl), α-(4-nonylphenyl)-ω-hydroxy-, phosphate, sodium salt (68553–97–9); Poly(oxy-1,2-ethanediyl), α-(4-nonylphenyl)-ω-hydroxy-, phosphate, sodium salt (68553–97–9); Poly(oxy-1,2-ethanediyl), α-(nonylphenyl)-ω-hydroxy-, branched, phosphate, sodium salt (68954–84–7); Poly(oxy-1,2-ethanediyl), α-(nonylphenyl)-ω-hydroxy-, phosphate, calcium salt (99821–14–4); Poly(oxy-1,2-ethanediyl), α-(4-nonylphenyl)-ω-hydroxy-, branched, phosphates (152143–22–1); Poly(oxy-1,2-ethanediyl), α-(4-nonylphenyl)-ω-hydroxy-, phosphate (51609–41–7); Poly(oxy-1,2-ethanediyl), α-(nonylphenyl)-ω-hydroxy-, phosphate, sodium salt (37340–60–6); Poly(oxy-1,2-ethanediyl), α-phosphono-ω-(4-nonylphenoxy)-, dipotassium salt (106151–63–7); Poly(oxy-1,2-ethanediyl), α-(nonylphenyl)-ω-hydroxy-, branched, phosphates, potassium salts (68584–47–4); Poly(oxy-1,2-ethanediyl), α-(nonylphenyl)-ω-hydroxy-, phosphate-, potassium salt (52503–15–8); Polyphosphoric acids, esters with polyethylene glycol nonylphenyl ether (68458–49–1).

NPE Sulfate Derivatives (NPESD): α-(p-nonylphenol)-ω-hydroxypoly(oxyethylene) sulfate, ammonium, calcium, magnesium, potassium, sodium, and zinc salts the nonyl group is propylene trimer isomer and the poly(oxyethylene) content averages 4 moles (Chemical Name (CAS No.)): Poly (oxy-1, 2-ethanediyl), α-sulfo-ω-(nonylphenoxy), sodium salt (9014–90–8); Poly (oxy-1, 2-ethanediyl), α-sulfo-ω-(nonylphenoxy), ammonium salt (9051–57–4); Poly (oxy-1, 2-ethanediyl), α-sulfo-ω-(nonylphenoxy), acid (9081–17–8); Poly (oxy-1, 2-ethanediyl), α-sulfo-ω-(nonylphenoxy), branched, ammonium salt (68649–55–8); Poly (oxy-1, 2-ethanediyl), α-sulfo-ω-(nonylphenoxy), branched (68891–33–8).

The petitioner believes no analytical method is needed because this information is not required for the establishment of a tolerance exemption. Contact: Kerry Leifer, (703) 308–8811, e-mail address: *leifer.kerry@epa.gov.*

3. *PP* 1E7875. (EPA–HQ–OPP–2011–0583). Akzo Nobel Surface Chemistry, LLC, 909 Mueller Ave., Chattanooga, TN 37406, requests to establish an exemption from the requirement of a tolerance for residues of 2-propanoic acid, 2-methyl-, polymer with methyl 2-methyl-2-propenoate and alpha-(2-methyl-1-oxo-2-propen-1-yl)-omega-methoxypoly(oxy-1,2-ethanediyl, graft (CAS No. 111740–36–4) when used as a pesticide inert ingredient as a dispersant in pesticide formulations under 40 CFR 180.960. This petition requests the elimination of the need to establish a maximum permissible level for residues of methacrylic acid-methyl methacrylate-polyethylene glycol monomethyl ether methacrylate graft copolymer in or on all raw agricultural commodities. The petitioner believes no analytical method is needed because this information is generally not required when all criteria for polymer exemption per 40 CFR 723.250 are met. Akzo Nobel is petitioning for an exemption from the requirement of a tolerance without any numerical limitations. Contact: Alganesh Debesai, (703) 308–8353, e-mail address: *debesai.alganesh@epa.gov.*

4. *PP* 1E7879. (EPA–HQ–OPP–2011–0587). Loveland Products, Inc., 3005 Rocky Mountain Ave., Loveland, CO 80538, requests to establish an exemption from the requirement of a tolerance for residues of 2-hydroxy-4-methoxybenzophenone (common name) (HMB), (CAS nomenclature: methanone, (2-hydroxy-4-methoxyphenyl) phenyl-; CAS No. 131–57–7) when used as a pesticide inert ingredient as a UV-stabilizer at no more than 25% in pesticide formulations under 40 CFR 180.920 (pre-harvest uses). This petition proposes to establish exemptions from the requirement of a tolerance for residues of 2-hydroxy-4-methoxybenzophenone (HMB) in or on all raw agricultural commodities. The petitioner believes no analytical method is needed because the petition proposes to establish exemptions from the requirement of a tolerance and no analytical method is generally required for establishment of a tolerance exemption. Contact: Deirdre Sunderland, (703) 603–0851, e-mail address: *sunderland.deirdre@epa.gov.*

5. *PP* 1E7880. (EPA–HQ–OPP–2011–0606). Clariant Corporation, 4000 Monroe Rd., Charlotte, NC 28205, requests to establish an exemption from the requirement of a tolerance for residues of Poly(oxy-1,2-ethanediyl), α-hydro-ω-hydroxy-, Mn 17000 amu and CAS No. 25322–68–3 under 40 CFR 180.960 when used as a pesticide inert ingredient in pesticide formulations as a solubilizer without limitations. Clariant Corporation is petitioning that Poly(oxy-1,2-ethanediyl), α-hydro-ω-hydroxy- be exempt from the requirement of a tolerance based upon the definition of a low-risk polymer under 40 CFR 723.250. Therefore, an analytical method to determine residues on treated crops is

not relevant. Contact: Elizabeth Fertich, (703) 347–8560, e-mail address: *fertich.elizabeth@epa.gov.*

List of Subjects

Environmental protection, Agricultural commodities, Feed additives, Food additives, Pesticides and pests, Reporting and recordkeeping requirements.

Dated: August 17, 2011.

Lois Rossi,

Director, Registration Division, Office of Pesticide Programs.

[FR Doc. 2011–21676 Filed 8–25–11; 8:45 am]

BILLING CODE 6560–50–P

ENVIRONMENTAL PROTECTION AGENCY

40 CFR Parts 260, 261, and 270

[EPA–HQ–RCRA–2010–0742; FRL–9457–4]

RIN 2050–AG62

Definition of Solid Waste

AGENCY: Environmental Protection Agency (EPA).

ACTION: Extension of comment period.

SUMMARY: The Environmental Protection Agency (EPA or the Agency) is announcing an extension to the comment period for the proposed rule on the definition of solid waste published in the **Federal Register** on July 22, 2011. EPA is proposing to revise certain exclusions from the definition of solid waste for hazardous secondary materials intended for reclamation that would otherwise be regulated under subtitle C of the Resource Conservation and Recovery Act. The purpose of these proposed revisions is to ensure that the recycling regulations, as implemented, encourage reclamation in a way that does not result in increased risk to human health and the environment from discarded hazardous secondary material. The comment period is being extended to October 20, 2011.

DATES: Comments must be received on or before by October 20, 2011.

ADDRESSES: Submit your comments, identified by Docket ID No. EPA–HQ–RCRA–2010–0742 by one of the following methods:

- *http://www.regulations.gov:* Follow the on-line instructions for submitting comments.
- *E-mail:* Comments may be sent by electronic mail (e-mail) to *RCRA-docket@epa.gov*, Attention Docket ID No. EPA–HQ–RCRA–2010–0742.
- *Fax:* Fax comments to: 202–566–9744, Attention Docket ID No. EPA–HQ–RCRA–2010–0742.
- *Mail:* Send comments to: OSWER Docket, EPA Docket Center, Mail Code 28221T, Environmental Protection Agency, 1200 Pennsylvania Avenue, NW., Washington, DC 20460, Attention Docket ID No. EPA–HQ–RCRA–2010–0742. Please include two copies of your comments. In addition, please mail a copy of your comments on the information collection provisions to the Office of Information and Regulatory Affairs, Office of Management and Budget (OMB), Attn: Desk Officer for EPA, 725 17th St., Washington, DC 20503.
- *Hand delivery:* Deliver two copies of your comments to: Environmental Protection Agency, EPA Docket Center, Room 3334, 1301 Constitution Avenue, NW., Washington, DC, Attention Docket ID No. EPA–HQ–RCRA–2010–0742. Such deliveries are only accepted during the docket's normal hours of operation and special arrangements should be made for deliveries of boxed information.

Instructions: Direct your comments to Docket ID Number EPA–HQ–RCRA–2010–0742. EPA's policy is that all comments received will be included in the public docket without change and may be made available online at *http://www.regulations.gov*, including any personal information provided, unless the comment includes information claimed to be Confidential Business Information (CBI) or other information whose disclosure is restricted by statute. Do not submit information that you consider to be CBI or otherwise protected through *http://www.regulations.gov* or e-mail. The *http://www.regulations.gov* Web site is an ''anonymous access'' system, which means EPA will not know your identity or contact information unless you provide it in the body of your comment. If you send an e-mail comment directly to EPA without going through *http://www.regulations.gov*, your e-mail address will be automatically captured and included as part of the comment that is placed in the public docket and made available on the Internet. If you submit an electronic comment, EPA recommends that you include your name and other contact information in the body of your comment and with any disk or CD–ROM you submit. If EPA cannot read your comment due to technical difficulties and cannot contact you for clarification, EPA may not be able to consider your comment. Electronic files should avoid the use of special characters, any form of encryption, and be free of any defects or viruses.

Docket: All documents in the docket are listed in the *http://www.regulations.gov* index. Although listed in the index, some information is not publicly available, such as CBI or other information whose disclosure is restricted by statute. Certain other material, such as copyrighted material, will be publicly available only in hard copy. Publicly available docket materials are available either electronically at *http://www.regulations.gov* or in hard copy at the OSWER Docket, EPA/DC, EPA West, Room 3334, 1301 Constitution Ave., NW., Washington, DC. The Public Reading Room is open from 8:30 a.m. to 4:30 p.m. Monday through Friday, excluding legal holidays. The telephone number for the Public Reading Room and the OSWER Docket is (202) 566–1744.

FOR FURTHER INFORMATION CONTACT: For more detailed information on specific aspects of this rulemaking, contact Marilyn Goode, Office of Resource Conservation and Recovery, Materials Recovery and Waste Management Division, MC 5304P, Environmental Protection Agency, 1200 Pennsylvania Ave., NW., Washington, DC 20460, (703) 308–8800, (*goode.marilyn@epa.gov*) or Tracy Atagi, Office of Resource Conservation and Recovery, Materials Recovery and Waste Management Division, MC 5304P, Environmental Protection Agency, 1200 Pennsylvania Ave., NW., Washington, DC 20460, at (703) 308–8672 (*atagi.tracy@epa.gov*). For information on the public meetings on this proposal scheduled for September 12, 2011 in Philadelphia, PA and for September 15, 2011 in Chicago, IL, please contact Amanda Geldard, Office of Resource Conservation and Recovery, Materials Recovery and Waste Management Division, MC 5304P, Environmental Protection Agency, 1200 Pennsylvania Ave., NW., Washington, DC 20460, at 703–347–8975 *geldard.amanda@epa.gov.* Information regarding these public meetings will also be posted at EPA's Web site at: *http://www.epa.gov/epawaste/hazard/dsw/rulemaking.htm.*

SUPPLEMENTARY INFORMATION:

This document extends the public comment period established in the **Federal Register** for 30 days from September 20, 2011 to October 20, 2011. In that **Federal Register** notice, EPA proposed revising certain exclusions from the definition of solid waste for hazardous secondary materials intended for reclamation that would otherwise be regulated under subtitle C of the Resource Conservation and Recovery Act (76 FR 44094). The purpose of these proposed revisions is to ensure that the recycling regulations, as implemented,

encourage reclamation in a way that does not result in increased risk to human health and the environment from discarded hazardous secondary material. Several requests were received from potential commentors, to extend the comment period. EPA is hereby extending the comment period, which was set to end on September 20, 2011, to October 20, 2011.

To submit comments, or access the docket, please follow the detailed instructions as provided under **ADDRESSES**. If you have questions, consult the individuals listed under **FOR FURTHER INFORMATION CONTACT**.

Dated: August 22, 2011.

Suzanne Rudzinski,

Director, Office of Resource Conservation and Recovery, Office of Solid Waste and Emergency Response.

[FR Doc. 2011–21931 Filed 8–25–11; 8:45 am]

BILLING CODE 6560–50–P

DEPARTMENT OF HEALTH AND HUMAN SERVICES

42 CFR Part 5

Negotiated Rulemaking Committee on Designation of Medically Underserved Populations and Health Professional Shortage Areas; Notice of Meeting

AGENCY: Health Resources and Services Administration, HHS.

ACTION: Negotiated Rulemaking Committee meeting.

SUMMARY: In accordance with section 10(a)(2) of the Federal Advisory Committee Act (Pub. L. 92–463), notice is hereby given of the following meeting of the Negotiated Rulemaking Committee on Designation of Medically Underserved Populations and Health Professional Shortage Areas.

DATES: Meeting will be held on September 15, 2011, 12 p.m.–5 p.m.

ADDRESSES: Webinar format.

FOR FURTHER INFORMATION CONTACT: For more information, please contact LaCrystal McNair, Center for Healthcare Workforce Analysis, Bureau of Health Professions, Health Resources and Services Administration, Room 9–49, Parklawn Building, 5600 Fishers Lane, Rockville, Maryland 20857, Telephone (301) 443–3578, E-mail: *lmcnair@hrsa.gov.* Information can also be found at the following Web site: *http://www.hrsa.gov/advisorycommittees/shortage/.*

SUPPLEMENTARY INFORMATION:

Status: The meeting will be open to the public.

Purpose: The purpose of the Negotiated Rulemaking Committee on Designation of Medically Underserved Populations and Health Professional Shortage Areas is to establish criteria and a comprehensive methodology for designation of Medically Underserved Populations (MUPs) and Primary Care Health Professional Shortage Areas (HPSAs), using a Negotiated Rulemaking (NR) process. It is hoped that use of the NR process will yield a consensus among technical experts and stakeholders on a new rule for designation of MUPs and Primary Care HPSAs, which would be published as an Interim Final Rule in accordance with Section 5602 of the Affordable Care Act, Public Law 111–148.

Agenda: The meeting will include a discussion of various components of a possible methodology for identifying areas of shortage and underservice, based on the recommendations of the Committee in the previous meeting. The agenda will be available on the Committee's Web site (*http://www.hrsa.gov/advisorycommittees/shortage/*) one day prior to the meeting. Agenda items are subject to change as priorities dictate.

For members of the public interested in participating in the webinar, please contact LaCrystal McNair by e-mail at *lmcnair@hrsa.gov.* Requests to attend can be made up to two days prior to the meeting. Participants will receive an e-mail response containing the link to the webinar. Requests to provide written comments should be sent to LaCrystal McNair by e-mail at least 10 days prior to the meeting. Members of the public will have the opportunity to provide written comments before and after the meeting.

The Committee is working under tight timeframes to meet the reporting requirement in the Affordable Care Act. Due to the complexity of the issue, the Committee has been granted additional time to meet its final report deadline. As a result, meetings were added to the Committee schedule. The logistical challenges of expanding the meeting schedule hindered an earlier publication of this meeting notice.

Dated: August 22, 2011.

Reva Harris,

Acting Director, Division of Policy and Information Coordination.

[FR Doc. 2011–21883 Filed 8–25–11; 8:45 am]

BILLING CODE 4165–15–P

OFFICE OF MANAGEMENT AND BUDGET

Office of Federal Procurement Policy

48 CFR Part 9904

Cost Accounting Standards; Allocation of Home Office Expenses to Segments

AGENCY: Office of Management and Budget (OMB), Office of Federal Procurement Policy (OFPP), Cost Accounting Standards Board (Board).

ACTION: Notice of Discontinuation of Rulemaking.

SUMMARY: The Office of Federal Procurement Policy (OFPP), Cost Accounting Standards (CAS) Board, is providing public notification of the decision to discontinue the rulemaking in the review of the CAS 403 thresholds at 48 CFR 9904.403–40(c)(2) that require use of the three factor formula described at 48 CFR 9904.403–50(c)(1) for allocating residual home office expenses.

FOR FURTHER INFORMATION CONTACT: Raymond J.M. Wong, Director, Cost Accounting Standards Board (telephone: 202–395–6805; e-mail: *Raymond_wong@omb.eop.gov*).

SUPPLEMENTARY INFORMATION:

A. Regulatory Process

Rules, Regulations and Standards issued by the Cost Accounting Standards (Board) are codified at 48 CFR chapter 99. The Office of Federal Procurement Policy Act, at 41 U.S.C. 1502(c) [formerly, 41 U.S.C. 422(g)], requires the Board, prior to the establishment of any new or revised Cost Accounting Standard, to complete a prescribed rulemaking process. The process generally consists of four steps.

The CAS Board has completed step one of the statutory rulemaking process, which required the Board to consult with interested persons concerning the advantages, disadvantages, and improvements anticipated in the pricing and administration of Government contracts as a result of the adoption of a proposed Standard. This notice announces the discontinuation of the rulemaking after completing step one of the four-step process in accordance with the requirements at 41 U.S.C. 1502(c).

B. Background and Summary

The CAS Board opened a review of the CAS 403 operating revenue thresholds at the urging of interested parties, an industry group and a Federal agency. They recommended revisions to the CAS operating revenue thresholds for determining whether a contractor is

required to use the three factor formula to allocate residual home office expenses to the segments. To update the thresholds to reflect the changed economic and business environment since they were initially established, the parties took different approaches to revising the thresholds. One party advocated that the operating revenue thresholds be raised by 400 percent to reflect the changes in the consumer price index (CPI) from 1973 to 2003. The other party urged the Board to conduct a Staff Study, similar to that performed by the Board to establish the current thresholds. On February 13, 2008, the CAS Board published a Staff Discussion Paper (SDP) on the Allocation of Home Office Expenses to Segments as the first step in its review to determine whether the current CAS 403 thresholds should be revised (73 FR 8260).

C. Public Comments

Three respondents submitted comments in response to the SDP. Two respondents supported a comprehensive study to determine the appropriate operating revenue thresholds at 48 CFR 9904.403–40(c)(2) for the application of the three factor formula described at 48 CFR 9904.403–50(c)(1), while another respondent supported adjusting the current thresholds by the change in the CPI. The arguments for the comprehensive study included the development of objective data to understand the impact of adjusting the operating revenue thresholds upon contractors subject to the three factor formula, and the possibility to measure the relationship of residual expenses to operating revenue for a representative contractor population. An impediment to conducting the comprehensive study is the time and effort required to compile and evaluate the data. In support of adjusting the current operating revenue thresholds by the change in the CPI, a respondent argued that the CPI is readily available and an independent, objective measure, while the Staff Study will require significant time and effort to accomplish without any certainty that the results would materially differ or be demonstrably superior to a CPI indexing approach. The other respondents noted that increasing the current thresholds by the change in the CPI was arbitrary and would risk exposing the acquisition community to the same underlying conditions which caused the CAS Board to promulgate CAS 403 originally.

Response: The CAS Board noted the arguments provided by the respondents.

D. Conclusion

After reviewing the comments and regulatory history of CAS 403, the CAS Board believes that it would be prudent to discontinue the review of the CAS 403 three factor formula operating revenue thresholds at this time. No evidence has been presented to the Board that the current thresholds are creating an inequity, or that adjusting the thresholds would substantially change the outcome, *i.e.,* the pool of contractors required to use the three factor formula to allocate residual home office expenses to the segments would not change significantly. The Board will revisit the issue in the future if circumstances warrant doing so.

Daniel I. Gordon,

Chair, Cost Accounting Standards Board.

[FR Doc. 2011–21897 Filed 8–25–11; 8:45 am]

BILLING CODE P

OFFICE OF MANAGEMENT AND BUDGET

Office of Federal Procurement Policy

48 CFR Part 9904

Cost Accounting Standards: Accounting for Insurance Costs

AGENCY: Cost Accounting Standards Board (Board), Office of Federal Procurement Policy (OFPP), Office of Management and Budget (OMB).

ACTION: Notice of Discontinuation of Rulemaking.

SUMMARY: The Office of Federal Procurement Policy (OFPP), Cost Accounting Standards (CAS) Board, is providing public notification of the decision to discontinue the rulemaking on the development of an amendment to Cost Accounting Standard (CAS) 416 regarding the use of the term ''catastrophic losses'' at 48 CFR 9904.416–50(b)(1).

FOR FURTHER INFORMATION CONTACT: Eric Shipley, Project Director, Cost Accounting Standards Board (telephone: 410–786–6381).

SUPPLEMENTARY INFORMATION:

A. Regulatory Process

Rules, Regulations and Standards issued by the Cost Accounting Standards Board (Board) are codified at 48 CFR chapter 99. The Office of Federal Procurement Policy Act, at 41 U.S.C. 1502(c) [formerly, 41 U.S.C. 422(g)], requires the Board, prior to the establishment of any new or revised Cost Accounting Standard, to complete a prescribed rulemaking process. The process generally consists of four steps.

The Board has already completed step one of the statutory rulemaking process, which requires the Board to consult with interested persons concerning the advantages, disadvantages, and improvements anticipated in the pricing and administration of government contracts as a result of the adoption of a proposed Standard. This notice announces the discontinuation of the rulemaking after completing step one of the four-step process in accordance with the requirements at 41 U.S.C. 1502(c).

B. Background and Summary

Prior Promulgations

In a letter dated September 26, 2000, the Office of the Under Secretary of Defense for Acquisition, Technology and Logistics requested that the Board consider whether the word ''catastrophic'' in the term ''catastrophic losses'' should be replaced with a term such as ''significant'' or ''very large'' in 9904.416–50(b)(1) in order to (a) more closely align the Standard with what was intended by its original promulgators and (b) eliminate any confusion between 9904.416–50(b)(1) and FAR 31.205–19, Insurance cost. At its May 13, 2005 meeting, the CAS Board directed the staff to begin work on a Staff Discussion Paper (SDP). On January 26, 2006, the Board published the SDP, ''Accounting for Insurance Costs'' (71 FR 4335) which in particular, addressed the use of the term ''catastrophic losses'' in CAS 416.

Public Comments

The Board received public comments from two respondents to the SDP. One respondent was concerned whether the term ''catastrophic losses'' is intended to create a classification of event characterized by rare occurrence and significant loss, or whether it is only the magnitude of a given loss that is defining as ''catastrophic.'' This respondent believed that self-insurance should be an acceptable method to cover catastrophic losses, such as earthquakes and wind damage, as well as ''other significant and non-recurring losses such as unusually large medical claims, major fires, or other losses that are significantly higher than might normally be expected.'' A primary concern was that ''the FAR, however, does not definitively address their allowability and CAS is unclear how costs for such significant actual self insured losses are to be measured and reflected in projected annual average losses.''

The other respondent recommended that the CAS Board take no further action and close this case. This respondent referred to the observation in the SDP that FAR 31.205–19 and CAS 416 both use the word ''catastrophic'' to refer to infrequent and unpredictable events involving major losses. The respondent believed there is no conflict between allocability under CAS 416 and allowability under FAR 31.205–19(e), explaining his belief as follows:

> CAS 416 controls the measurement and allocation of the cost of infrequent and difficult to predict events. The FAR at 31.205–19(e) and 28.308 disallow the cost unless the Government accepts the risk and associated cost of such infrequent and difficult to predict events.

Neither respondent provided any data or other information describing disputes or other problems arising from the use of the term ''catastrophic losses'' in 9904.416–50(b)(1).

Response

In deciding to discontinue rulemaking on this case, the Board reviewed the history of the development of the CAS and the FAR provisions on the term ''catastrophic losses.'' The CAS Board was clearly addressing the allocation of large losses from infrequent and unpredictable events in paragraph (6) of the preamble to CAS 416 (43 FR 42239, September 20, 1978), which stated:

> Obviously, a catastrophic loss would be one which would be very large in relation to the average loss per occurrence for that exposure, and losses of that magnitude would be expected to occur infrequently.

9904.416–50(b)(1) treats ''catastrophic losses'' as a contingency and recognizes the cost of ''catastrophic losses'' separately from the projected average loss, or actual loss experience if used. This treatment is consistent with general insurance practices that exclude catastrophic losses from the insurable risk covered by an insurance policy. As part of its cost accounting practices the contractor establishes the threshold for reinsuring a portion of the catastrophic loss which might occur at a segment. The Board explained in the preamble that the reinsurance arrangement can reflect the relative size and activities of the segment:

> The Board believes that what constitutes ''catastrophic loss'' depends on the individual circumstances of each contractor. The determination should be made at the time the internal loss-sharing policy is established and should be revised, as necessary, for changes in future circumstances.

Notwithstanding the description of the issue in the SDP, there does not appear to be a substantive difference between the implied definition of the term ''catastrophic losses'' in 9904.416–50(b)(1) and FAR 31.205–19. The Board believes that the deliberations and actions of the original Board adequately address the narrow question of how the term ''catastrophic losses'' is used in 9904.416–50(b)(1). Questions of allowability under FAR 31.205–19 are beyond the purview of the Board.

Conclusions

After reviewing the comments and the history of the CAS rules, the Board believes use of the term ''catastrophic losses'' in CAS 416 is consistent with the intent of its original promulgators that a ''catastrophic loss'' is ''very large in relation to the average loss per occurrence for that exposure,'' is ''expected to occur infrequently,'' and is dependent ''on the individual circumstances of each contractor.'' The original promulgators intended the definition of what constitutes a ''catastrophic loss'' be part of the contractor's cost accounting practice where the determination of what constitutes a catastrophic loss ''should be made at the time the internal loss-sharing policy is established and should be revised, as necessary, for changes in future circumstances.'' (See Preamble to CAS 416 (43 FR 42239, Sept. 20, 1978).)

Although CAS 416 has been in effect for over 30 years, the respondents provided no data on problems or disputes related to the meaning of the term ''catastrophic losses.'' At this time, the Board believes that no amendments to CAS 416 regarding the use of the term ''catastrophic losses'' are necessary and is hereby discontinuing further rulemaking in this case.

Daniel I. Gordon,

Chair, Cost Accounting Standards Board.

[FR Doc. 2011–21898 Filed 8–25–11; 8:45 am]

BILLING CODE P

DEPARTMENT OF THE INTERIOR

Fish and Wildlife Service

50 CFR Part 17

[Docket No. FWS–R3–ES–2011–0029 ; 92220–1113–000; ABC Code: C6]

RIN 1018–AX57

Endangered and Threatened Wildlife and Plants; Revising the List of Endangered and Threatened Wildlife for the Gray Wolf (Canis lupus) in the Eastern United States

AGENCY: Fish and Wildlife Service, Interior.

ACTION: Proposed rule; correction and reopening of comment period.

SUMMARY: On May 5, 2011, we, the U.S. Fish and Wildlife Service (Service), published a proposed rule to reevaluate the listing of the Minnesota population of gray wolves *(Canis lupus)* and revise the listing to conform to current statutory and policy requirements (76 FR 26086). In that proposed rule, we recognized recent taxonomic information indicating that the gray wolf subspecies *Canis lupus lycaon* should be elevated to the full species *C. lycaon.* We proposed to identify the Minnesota population as a Western Great Lakes (WGL) Distinct Population Segment (DPS) of the gray wolf and to remove this DPS from the List of Endangered and Threatened Wildlife. We also proposed to revise the range of the gray wolf (the species *C. lupus*) by removing all or parts of 29 eastern States, which, based in part on recognition of *C. lycaon,* were not part of the historical range of the gray wolf.

We announce the reopening of the comment period for our May 5, 2011, proposed rule to provide for public review and comment of additional information regarding our recognition of *C. lycaon* as a separate species. We seek information, data, and comments from the public with respect to new information relevant to the taxonomy of wolves in North America. In addition we are making a correction to our May 5, 2011, proposed rule and notifying the public that we are considering concluding that proposed rule with two or more final rules.

DATES: We request that comments on this proposal be submitted by the close of business on September 26, 2011. Any comments that we receive after the closing date may not be considered in the final decision on this action.

ADDRESSES: *Document availability:* See **SUPPLEMENTARY INFORMATION** for information on how to access the new report described in this revised proposed rule.

Comment submission: You may submit comments by one of the following methods:

Electronically: Go to the Federal eRulemaking Portal: *http://www.regulations.gov.* In the Enter Keyword or ID box, enter FWS–R3–ES–2011–0029, which is the docket number for this rulemaking. Then, in the Search panel at the top of the screen, under the Document Type heading, click on the Proposed Rules link to locate this document. You may submit a comment by clicking on ''Submit a Comment.''

By hard copy: Submit by U.S. mail or hand-delivery to: Public Comments

Processing, Attn: FWS–R3–ES–2011–0029; Division of Policy and Directives Management; U.S. Fish and Wildlife Service; 4401 N. Fairfax Drive, MS 2042–PDM; Arlington, VA 22203.

We will post all comments on *http://www.regulations.gov.* This generally means that we will post any personal information you provide us (see the Public Comments section below for more information).

FOR FURTHER INFORMATION CONTACT: Laura Ragan, 612–713–5350. Direct all questions or requests for additional information to: GRAY WOLF QUESTIONS, U.S. Fish and Wildlife Service, Ecological Services, 5600 American Blvd. West, Suite 990, Bloomington, MN 55437–1458. Additional information is also available on our Web site at *http://www.fws.gov/midwest/wolf.* Individuals who are hearing-impaired or speech-impaired may call the Federal Relay Service at 1–800–877–8337 for TTY assistance.

SUPPLEMENTARY INFORMATION:

Background

In our May 5, 2011, proposed rule (76 FR 26086), we specifically recognized the eastern wolf *(Canis lycaon)* as a full species. Within the proposed rule, we recognized three wolf species with ranges in the conterminous United States: *Canis lupus* (gray wolf), *Canis lycaon* (eastern wolf), and *Canis rufus* (red wolf). We also recognized that the ranges of *C. lupus* and *C. lycaon* overlap in the Western Great Lakes region, and the population of wolves in the Western Great Lakes region includes both gray wolf and eastern wolf. However, the available evidence suggested the range of *C. lupus* did not otherwise historically overlap with the ranges of *C. lycaon* or *C. rufus* in the eastern United States. Thus, the May 5, 2011, proposed rule reflected our understanding that the wolf species that historically occupied the northeastern United States was the eastern wolf and the wolf species that historically occupied the southeastern United States was the red wolf. Accordingly, we proposed to revise the gray wolf listing to remove those States.

The comment period for that proposed rule closed on July 5, 2011. We received significant comments from States and other stakeholders highlighting the controversy in North American wolf taxonomy. As such, we are reopening the comment period to provide further information regarding the taxonomic interpretation recognized in the May 5, 2011, proposed rule and seek comment as to the best scientific and commercial data available regarding the recognition of *Canis lycaon* as a full species. In part, this conclusion was based on information summarized in a manuscript prepared by Service employees that is currently undergoing review for publication (Chambers *et al.,* in prep.).

On May 5, 2011, we simultaneously reissued our April 2, 2009, final rule that identified the Northern Rocky Mountain (NRM) population of gray wolf as a distinct population segment (DPS) and revised the List of Endangered and Threatened Wildlife by removing most of the gray wolves in the DPS (76 FR 25590). This action became effective upon publication in the **Federal Register**. The May 5, 2011, proposed rule did not reflect language from our separate May 5, 2011, final rule delisting most of the NRM DPS. The proposed rule language below corrects this to reflect the current status of those wolves. Finally, it is also worth noting that we received several comments on our May 5, 2011, proposal requesting that we further subdivide the proposal into regional pieces. Thus, we are hereby providing notice that we are considering issuing separate final rules for our final determinations on the delisting of the Western Great Lakes DPS and the delisting of all or portions of the 29 States outside the historical range of the gray wolf, which may itself be split into separate rules for the Northeast and the Southeast.

Public Comments Solicited

We intend that any final action resulting from this proposal will be as accurate and as effective as possible. Therefore, we hereby request data, comments, new information, or suggestions from the public, other concerned governmental agencies, the scientific community, Tribes, industry, or any other interested party concerning this proposed rule. We particularly seek comments concerning:

(1) The taxonomic classification of wolves in the midwestern and northeastern United States as described in a Service manuscript prepared by Chambers *et al.,* in particular the recognition of the eastern wolf *(Canis lycaon)* as a full species.

(2) Any other relevant information regarding wolves in eastern North America.

You may submit your comments and materials concerning this proposed rule by one of the methods listed in **ADDRESSES**. We request that you send comments only by the methods described in **ADDRESSES**. Comments must be submitted to *http://www.regulations.gov* before midnight (Eastern Daylight Time) on the date specified in **DATES.** All comments that were submitted during the earlier public comment period will be included as part of the administrative record for this action and need not be resubmitted.

We will post your entire comment—including your personal identifying information—on *http://www.regulations.gov.* If you provide personal identifying information, such as your street address, phone number, or e-mail address, you may request at the top of your document that we withhold this information from public review. However, we cannot guarantee that we will be able to do so.

Comments and materials we receive, as well as supporting documentation we used in preparing this proposed rule including the Chambers *et al.* manuscript (in prep), will be available for public inspection on *http://www.regulations.gov* at Docket No. FWS–R3–ES–2011–0029; on the Service's Internet site at *http://www.fws.gov/midwest/wolf/;* or by appointment, during normal business hours at the following Ecological Services offices:

- Twin Cities, Minnesota Ecological Services Field Office, 4101 American Blvd. E., Bloomington, MN; 612–725–3548.
- Green Bay, Wisconsin Ecological Services Field Office, 2661 Scott Tower Dr., New Franken, WI; 920–866–1717.
- East Lansing, Michigan Ecological Services Field Office, 2651 Coolidge Road, Suite 101, East Lansing, MI; 517–351–2555.
- New England Ecological Services Field Office, U.S. Fish and Wildlife Service, 70 Commercial St., Suite 300, Concord, NH; 603–223–2541.

Authority: The authority for this action is the Endangered Species Act of 1973, as amended (16 U.S.C. 1531 *et seq.*).

List of Subjects in 50 CFR Part 17

Endangered and threatened species, Exports, Imports, Reporting and recordkeeping requirements, Transportation.

Proposed Regulation Promulgation

Accordingly, we propose to further amend part 17, subchapter B of chapter I, title 50 of the Code of Federal Regulations, as proposed to be amended at 76 FR 26086, May 5, 2011, as follows:

PART 17—ENDANGERED AND THREATENED WILDLIFE AND PLANTS

1. The authority citation for part 17 continues to read as follows:

Authority: 16 U.S.C. 1361–1407; 16 U.S.C. 1531–1544; 16 U.S.C. 4201–4245; Pub. L. 99–625, 100 Stat. 3500; unless otherwise noted.

2. Amend § 17.11(h) by revising the entry for ''Wolf, gray'' under MAMMALS in the List of Endangered and Threatened Wildlife to read as follows:

§ 17.11 [Amended]

* * * * *

(h) * * *

Species		Historic range	Vertebrate population where endangered or threatened	Status	When listed	Critical habitat	Special rules
Common name	Scientific name						
MAMMALS							
*		*	*	*		*	
Wolf, gray	*Canis lupus*	Holarctic	U.S.A.: All of CA, CO, KS, NE, and NV; those portions of AZ, NM, TX, and WY not included in an experimental population as set forth below; and portions of IA, MO, ND, OK, OR, SD, TX, UT, and WA as follows: (1) Southern IA, (that portion south of the centerline of Highway 80); (2) Northwestern MO (that portion northwest of the centerline of Interstate Highway 44 and northwest of the centerline of Interstate Highway 70 east of St. Louis); (3) Western ND (that portion south and west of the Missouri River upstream to Lake Sakakawea and west of the centerline of Highway 83 from Lake Sakakawea to the Canadian border); (4) Western OK (that portion west of the centerline of Interstate Highway 35 and northwest of the centerline of Interstate Highway 44 north of Oklahoma City); (5) Western OR (that portion west of the centerline of Highway 395 and Highway 78 north of Burns Junction and that portion of OR west of the centerline of Highway 95 south of Burns Junction); (6) Western SD (that portion south and west of the Missouri River); (7) Western TX (that portion west of the centerline of Interstate Highway 35); (8) Most of Utah (that portion south and west of the centerline of Highway 84 and that portion south of Highway 80 from Echo to the UT/WY Stateline); and (9) Western WA (that portion west of the centerline of Highway 97 and Highway 17 north of Mesa and that portion west of the centerline of Highway 395 south of Mesa). Mexico.	E	1, 6, 13, 15, 35	N/A	N/A
Do	..... do	..... do	U.S.A. (portions of AZ, NM, and TX—see § 17.84(k))	XN	631	NA	17.84(k)
Wolf, gray [Northern Rocky Mountain DPS].	*Canis lupus*	U.S.A. (MT, ID, WY, eastern WA, eastern OR, and north central UT).	U.S.A. (WY—see § 17.84(i) and (n))	XN	561, 562	NA	17.84(i) 17.84(n)
*		*	*	*		*	

Dated: August 16, 2011.

Gregory E. Siekanic,

Acting Director, U.S. Fish and Wildlife Service.

[FR Doc. 2011–21839 Filed 8–25–11; 8:45 am]

BILLING CODE 4310–55–P

DEPARTMENT OF THE INTERIOR

Fish and Wildlife Service

50 CFR Part 17

[Docket No. FWS–R8–FHC–2011–0046; 94310–1337–0000–D2]

RIN 1018–AX51

Endangered and Threatened Wildlife and Plants; Termination of the Southern Sea Otter Translocation Program

AGENCY: Fish and Wildlife Service, Interior.

ACTION: Proposed rule; notice of availability.

SUMMARY: We, the U.S. Fish and Wildlife Service (Service), propose to remove the regulations that govern the southern sea otter (*Enhydra lutris nereis*) translocation program, including the establishment of an experimental population of southern sea otters, and all associated management actions. We are also proposing to amend the Authority citation for 50 CFR part 17 by removing the reference to Public Law 99–625, the statute that authorized the Secretary to promulgate regulations establishing the southern sea otter translocation program. Removal of the regulations will terminate the program. We are proposing this action because we believe that the southern sea otter translocation program has failed to fulfill its purpose, as outlined in the southern sea otter translocation plan, and that our recovery and management goals for the species cannot be met by continuing the program. Our conclusion is based, in part, on an evaluation of the program against specific failure criteria established at the program's inception. This proposed action would terminate the designation of the experimental population of southern sea otters, abolish the southern sea otter translocation and management zones, and eliminate the current requirement to remove southern sea otters from San Nicolas Island and the management zone. This proposed rule would also eliminate future actions, required under the current regulations, to capture and relocate southern sea otters for the purpose of establishing an experimental population, and to remove southern sea otters in perpetuity from an ''otter-free'' management zone. As a result, it would allow southern sea otters to expand their range naturally into southern California waters. We have prepared a

revised draft supplemental environmental impact statement (SEIS) and an initial regulatory flexibility analysis (IRFA) to accompany this proposed rule.

DATES: We will consider comments on the proposed rule, associated revised draft SEIS (which includes a revised draft translocation program evaluation as Appendix C), and the IRFA that are received or postmarked on or before October 24, 2011 or at a public hearing. We will hold two public informational open houses from 5 p.m. to 6 p.m., each followed by a public hearing from 6 p.m. to 8 p.m., on October 4, 2011, and October 6, 2011, at the locations identified in the **ADDRESSES** section.

ADDRESSES: *Written Comments:* You may submit comments on the proposed rule, the revised draft SEIS, and the IRFA by one of the following methods:

○ *Electronically:* Go to the Federal eRulemaking Portal: *http://www.regulations.gov.* In the Enter Keyword or ID box, enter FWS–R8–FHC–2011–0046, which is the docket number for this rulemaking. Then click on the Search button. On the resultant screen, you may submit a comment by clicking on ''Submit a Comment.''

○ *By hard copy:* Submit by U.S. mail or hand-delivery to: Public Comments Processing, Attn: FWS–R8–FHC–2011–0046; Division of Policy and Directives Management; U.S. Fish and Wildlife Service; 4401 N. Fairfax Drive, MS 2042–PDM; Arlington, VA 22203.

○ *In person:* Individuals may attend a public hearing and present oral or written comments, or both, on the proposed rule, revised draft SEIS, or the IRFA.

We will not accept e-mail or faxes. We will post all information received on *http://www.regulations.gov.* This generally means that we will post any personal information you provide us (see the Public Comments section below for more details).

Copies of Documents: The proposed rule, revised draft SEIS, and IFRA are available by the following methods:

○ *Federal eRulemaking Portal:* Go to *http://www.regulations.gov.* In the Enter Keyword or ID box, enter FWS–R8–FHC–2011–0046, which is the docket number for this rulemaking. Then click on the Search button. On the resultant screen, you may view supporting documents by clicking on the ''Open Docket Folder'' icon.

○ *Agency Web site:* You can view supporting documents on our Web site at *http://www.fws.gov/ventura/.*

○ *In person:* You can make an appointment, during normal business hours, to view the documents, comments, and materials in person at the U.S. Fish and Wildlife Service, Ventura Fish and Wildlife Office, 2493 Portola Road, Suite B, Ventura, CA 93003–7726; by telephone (805/644–1766); by facsimile (805/644–3958); or by visiting our Web site at *http://www.fws.gov/ventura/.* Persons who use a telecommunications device for the deaf (TDD) may call the Federal Information Relay Services (FIRS) at 800–877–8339.

Public Hearings: We will hold two public informational open houses, each followed by a public hearing, at Fleischmann Auditorium, Santa Barbara Museum of Natural History, 2559 Puesta Del Sol, Santa Barbara, CA 93105 on October 4, 2011, and at La Feliz Room, Seymour Marine Discovery Center, Long Marine Laboratory, 100 Shaffer Road, Santa Cruz, CA 95060 on October 6, 2011. See the **DATES** section above for the times of these hearings.

FOR FURTHER INFORMATION CONTACT: Lilian Carswell, at the above Ventura street address, by telephone (805/644–1766), by facsimile (805/644–3958), or by electronic mail (*Lilian_Carswell@fws.gov*). Persons who use a telecommunications device for the deaf (TDD) may call the Federal Information Relay Services (FIRS) at 800–877–8339.

SUPPLEMENTARY INFORMATION:

Public Comments

We wish to ensure that any final action resulting from this proposed rule will be based on information that is as accurate as possible. Therefore, we invite tribal and governmental agencies, the scientific community, industry, and other interested parties to submit comments or recommendations concerning any aspect of this proposed rule, the revised draft SEIS, or the IFRA. Comments should be as specific as possible. In addition, please include sufficient information with your comments to allow us to authenticate any scientific or commercial data you reference or provide. In particular, we seek comments concerning the following:

(1) The reasons why the southern sea otter translocation program, including the management and translocation zones and associated regulations, should or should not be terminated, including information that supports the need for any changes to the proposed rule;

(2) Current or planned activities in the subject area and their possible effects on southern sea otters that have not been adequately considered in the proposed rule, revised draft SEIS, and IRFA;

(3) Any foreseeable economic or other impacts resulting from the proposed termination of the southern sea otter translocation program that have not been adequately considered in the proposed rule, revised draft SEIS, and IRFA;

(4) Any substantive information on real or potential effects on southern sea otters of the proposed termination of the southern sea otter translocation program that have not been adequately considered in the proposed rule, revised draft SEIS, and IRFA; and

(5) Any actions that could be considered in lieu of, or in conjunction with, the proposed rule that would provide equivalent opportunity for the recovery of the southern sea otter.

Prior to issuing a final rule on this proposed action, we will take into consideration all comments and any additional information we receive. Such information may lead to a final rule that differs from this proposal. All comments and recommendations, including names and addresses, will become part of the supporting record.

You may submit your comments and materials concerning the proposed rule, revised draft SEIS, or IRFA by one of the methods listed in the **ADDRESSES** section. We will not accept comments sent by e-mail or fax or to an address not listed in the **ADDRESSES** section. Finally, we will not consider hand-delivered comments that we do not receive, or mailed comments that are not postmarked, by the date specified in the **DATES** section. Comments must be submitted to *http://www.regulations.gov* before midnight (Eastern Time) on the date specified in the **DATES** section.

We will post your entire comment—including your personal identifying information—at *http://www.regulations.gov.* If your written comment includes your street address, phone number, or e-mail address, you may request at the top of your document that we withhold this information from public review. However, we cannot guarantee that we will be able to do so. We will post hardcopy submissions at *http://www.regulations.gov.* Please note that comments submitted to this Web site are not immediately viewable. When you submit a comment, the system receives it immediately. However, the comment will not be publicly viewable until we post it, which might not occur until several days after submission.

Comments and materials we receive, as well as supporting documentation we used in preparing this proposed rule, will be available for public inspection at *http://www.regulations.gov,* or by

appointment, during normal business hours, at the U.S. Fish and Wildlife Service, Ventura Fish and Wildlife Office (see **ADDRESSES** and **FOR FURTHER INFORMATION CONTACT**).

Public Hearing

We have scheduled two formal public hearings to afford the general public and all interested parties with an opportunity to make formal oral comments or to submit written comments in person on the proposed rule, revised draft SEIS, or IRFA.

We will hold the public hearings at the locations listed in **ADDRESSES** on the dates listed in **DATES**. The public hearings will last from 6 p.m. to 8 p.m. We will hold a public informational open house prior to each hearing from 5 pm to 6 pm to provide an additional opportunity for the public to gain information and ask questions about the proposed rule. This open house session should assist interested parties in preparing substantive comments on the proposed rule.

Persons needing reasonable accommodations in order to attend and participate in a public hearing should contact the Ventura Fish and Wildlife Office, at the address or phone number listed in the **FOR FURTHER INFORMATION CONTACT** section as soon as possible. In order to allow sufficient time to process requests, please contact us for assistance no later than one week before the hearing.

Written comments submitted during the comment period receive equal consideration with comments presented at a public hearing. All comments we receive at the public hearing, both verbal and written, will be considered in making our final decision.

Background

Previous Federal Actions

On January 14, 1977, we listed the southern sea otter as a threatened species under the ESA (16 U.S.C. 1531 *et seq.*), on the basis of its small population size, its greatly reduced range, and the potential risk from oil spills (42 FR 2965). We established a recovery team for the species in 1980, and approved a recovery plan on February 3, 1982. In the recovery plan, we identified the translocation of southern sea otters as an effective and reasonable recovery action, acknowledging that a translocated southern sea otter colony could impact shellfish fisheries that had developed in areas formerly occupied by southern sea otters. The objectives of southern sea otter translocation, as stated in the 1982 recovery plan, included: (1) Establishing a second colony (or colonies) sufficiently distant from the parent population such that a smaller portion of the southern sea otter range would be affected in the event of a large-scale oil spill; and (2) establishing a database for identifying the optimal sustainable population level for the southern sea otter. We anticipated that translocation would ultimately result in a larger population size and a more continuous distribution of animals throughout the southern sea otter's historic range.

Under the ESA, the Secretary has inherent authority to establish new or translocated populations of listed species. Section 10(j) of the ESA provides the Secretary with additional flexibility to relax the protective provisions of the ESA when translocating a population of a listed species by allowing the Secretary to designate the translocated population as an experimental population. However, the southern sea otter is protected under both the ESA and the MMPA, and at the time, the MMPA did not contain similar provisions. This inconsistency was resolved in the case of the southern sea otter translocation program by the passage of Public Law (Pub. L.) 99–625 (Fish and Wildlife Programs: Improvement; Section 1. Translocation of California Sea Otters) on November 7, 1986, which specifically authorized development of a translocation plan for southern sea otters administered in cooperation with the affected State.

If the Secretary of the Interior chose to develop a translocation plan under Pub. L. 99–625, the plan was required to include: (1) The number, age, and sex of southern sea otters proposed to be relocated; (2) the manner in which southern sea otters were to be captured, translocated, released, monitored, and protected; (3) specification of a zone into which the experimental population would be introduced (translocation zone); (4) specification of a zone surrounding the translocation zone that did not include the range of the parent population or adjacent range necessary for the recovery of the species (management zone); (5) measures, including an adequate funding mechanism, to isolate and contain the experimental population; and (6) a description of the relationship of the implementation of the plan to the status of the species under the ESA and determinations under section 7 of the ESA. The purposes of the management zone were to: (1) Facilitate the management of southern sea otters and the containment of the experimental population within the translocation zone; and (2) prevent, to the maximum extent feasible, conflicts between the experimental population and fishery resources within the management zone. Any southern sea otter found within the management zone was to be treated as a member of the experimental population. We were required to use all feasible, nonlethal means to capture southern sea otters in the management zone and to return them to the translocation zone or to the range of the parent population.

On August 15, 1986, we published a proposed rule to establish an experimental population of southern sea otters at San Nicolas Island, Ventura County, California, in conjunction with a management zone from which sea otters would be excluded (51 FR 29362). Concurrently, we released a draft environmental impact statement (EIS) that analyzed the impacts of six alternatives, which included establishing a program to translocate southern sea otters from their then-current range along the central coast of California to areas of the northern coast of California, the southern coast of Oregon, or San Nicolas Island off the coast of southern California. We identified translocation to San Nicolas Island as our preferred alternative, with the management zone including the coastline from Point Conception to the Mexican border and all of the offshore islands except San Nicolas Island. On May 8, 1987, we made available our final EIS (52 FR 17486). A detailed translocation plan meeting the requirements of Public Law 99–625 was included as an appendix to the final EIS. On August 11, 1987, we published a final rule providing implementing regulations for the translocation program (52 FR 29754); these regulations are codified at 50 CFR 17.84(d). These regulations define the boundaries of the translocation and management zones, provide the framework for the program, and include a set of criteria for determining if the translocation should be considered a failure.

Implementation of the Translocation Program

The purpose of the southern sea otter translocation program was to: (1) Implement a primary recovery action for the southern sea otter; and (2) obtain data for assessing southern sea otter translocation and containment techniques, population dynamics, ecological relationships with the nearshore community, and effects on the donor population of removing individual southern sea otters for translocation (52 FR 29754; August 11, 1987). The translocation of southern sea otters was intended to advance southern

sea otter recovery, with the ultimate goal of delisting the species under the ESA. Through translocation, we hoped to establish a self-sustaining southern sea otter population (experimental population) that would provide a safeguard in the event that the parent southern sea otter population was adversely affected by a catastrophic event, such as an oil spill. We expected that, to achieve this aim, the colony at San Nicolas Island would need to grow to a size such that it could remain viable while furnishing up to 25 sea otters per year for up to 3 years to repopulate affected areas of the parent range. Based on the magnitude of oil spills that had occurred up to that time, San Nicolas Island appeared to be sufficiently distant from the parent range to provide a reasonable safeguard in the event of such a catastrophic occurrence.

On August 24, 1987, we began to implement the translocation plan by moving groups of southern sea otters from the coast of central California to San Nicolas Island. The translocation plan allowed for a maximum of 70 southern sea otters to be moved to San Nicolas Island during the first year of the program (USFWS 1987). This number could be supplemented with up to 70 animals annually (up to 250 total) in subsequent years, if necessary, to ensure the success of the translocation and to prevent the colony from declining into an irreversible downward trend. Assuming that a core population of 70 southern sea otters could be maintained through translocation, we anticipated that the experimental population could be established within as few as 5 or 6 years. In this context, the term ''established'' had a specific meaning: When at least 150 southern sea otters resided at the island and the population had a minimum annual recruitment of 20 animals (52 FR 29754; August 11, 1987).

Between August 1987 and March 1990, we captured 252 southern sea otters along the central California coast and released 140 at San Nicolas Island. More than 100 of the captured sea otters were deemed unsuitable for translocation and released near their capture sites, and 6 of the 252 animals died of stress-related conditions before translocation to San Nicolas Island. Some sea otters died as a result of translocation, many swam back to the parent population, and some moved into the management zone. As of March 1991, approximately 14 independent (non-pup) southern sea otters (10 percent of those translocated) were thought to remain at the island.

Because of the unexpected mortalities and high emigration encountered during the first year, we amended our regulations for the translocation program in 1988 (53 FR 37577; September 27, 1988). The amendments were intended to minimize stress on captured sea otters, to improve the survival of translocated animals, and to minimize the dispersal of translocated sea otters from the translocation zone. Specifically, we provided more flexibility in selecting the ages of sea otters for translocation, eliminated the restriction to capture them only within an August to mid-October timeframe, eliminated the requirement to move a specified number of sea otters previously implanted with transmitters, provided the flexibility either to transport them immediately or to hold them on the mainland before releasing them at San Nicolas Island, and eliminated the requirement to translocate a minimum of 20 animals at a time.

The fate of approximately half the sea otters taken to San Nicolas Island was never determined, although an intense effort was made to locate translocated animals at San Nicolas Island, in the management zone, and in the parent range. In 1991, we stopped translocating sea otters to San Nicolas Island due to high rates of dispersal and poor survival. However, we continued monitoring the sea otters remaining in the translocation zone.

In December 1987, in coordination with the California Department of Fish and Game, we began capturing and moving southern sea otters that entered the designated management zone. Containment efforts were intended to keep the management zone free of otters, in accordance with Public Law 99–625 and our implementing regulations. Containment operations consisted of three interdependent activities: (1) Surveillance of the management zone; (2) capture of southern sea otters in the management zone; and (3) relocation of captured animals to the parent range or San Nicolas Island.

Between December 1987 and February 1993, 24 southern sea otters were captured, removed from the management zone, and released in the parent range. Of these, two sea otters were captured twice in the management zone, despite being released at the northern end of the parent range after their first removal. In February 1993, two sea otters that had been recently captured in the management zone were found dead shortly after their release in the range of the parent population. In total, four sea otters were known or suspected to have died within 2 weeks of being moved from the management zone. We were concerned that sea otters were dying as a result of our containment efforts; therefore, in 1993, we suspended all sea otter capture activities in the management zone to evaluate capture and transport methods. We recognized that available capture techniques, which had proven to be less effective and more labor-intensive than originally predicted, were not an efficient means of containing sea otters. From 1993 to 1997, few sea otters were reported in the management zone, and there appeared to be no immediate need to address sea otter containment. In 1997, the California Department of Fish and Game notified us that it intended to end its sea otter research project and would no longer be able to assist if we resumed capturing sea otters in the management zone.

In 1998, a group of approximately 100 southern sea otters moved from the parent range into the northern end of the management zone, inaugurating a pattern of seasonal movements of large numbers of sea otters into and out of the management zone. Subsequent radio-telemetry studies have determined that these animals are moving great distances throughout their range and are an important component of the population (*i.e,* the same territorial males that hold territories and sire pups within the center of the range may be found seasonally aggregated in ''male areas,'' often at the range ends) (Tinker *et al.* 2006). At the same time, rangewide counts of the southern sea otter population indicated a decline of approximately 10 percent between 1995 and 1998. In light of the decline in the southern sea otter population, we were concerned about the potential effects on the parent population of moving the large number of southern sea otters that had moved into the management zone. We asked the Southern Sea Otter Recovery Team, a team of biologists with expertise pertinent to southern sea otter recovery, for their recommendation regarding the capture and removal of southern sea otters in the management zone. The recovery team recommended that we not move southern sea otters from the management zone to the parent population because moving large groups of southern sea otters and releasing them within the parent range would be disruptive to the social structure of the parent population. We agreed with their recommendation.

In order to notify stakeholders of our intended course of action, we held two public meetings in August 1998. At these meetings, we provided information on the status of the translocation program, solicited general comments and recommendations, and

announced that we intended to reinitiate consultation under section 7 of the ESA for the containment program and to begin the process of evaluating the failure criteria established for the translocation program. Subsequent to these meetings, the group of technical consultants (a body composed of representatives from the fishery and environmental communities, as well as State and Federal agencies) to the Southern Sea Otter Recovery Team was expanded to assist in evaluating the translocation program. We provided updates on the translocation program and the status of the southern sea otter population to the California Coastal Commission, the Marine Mammal Commission, and the California Fish and Game Commission in 1998 and 1999.

In March 1999, we distributed a draft evaluation of the translocation program to interested parties for their comment. The draft document included the recommendation that we declare the translocation program a failure because fewer than 25 sea otters remained in the translocation zone, and reasons for the translocated sea otters' emigration or mortality could not be identified or remedied. We received comments from State and Federal agencies and the public following release of the draft for review. Some comments supported declaring the translocation program a failure, while others opposed it. The majority of respondents cited new information that became available after publication of our 1987 EIS and record of decision for the program. Many respondents encouraged us to look at new alternatives that were not identified in our 1987 EIS or corresponding implementing regulations.

During the same period, we prepared a draft biological opinion, pursuant to section 7 of the ESA, evaluating the containment aspects of the southern sea otter translocation program. We distributed the draft to interested parties for comment on March 19, 1999, and issued a final biological opinion on July 19, 2000. Our reinitiation of consultation was prompted by the receipt of substantial new information on the population status, behavior, and ecology of the southern sea otter that revealed adverse effects of containment that were not previously considered. In the biological opinion, we cited the following information and circumstances as prompting reinitiation:

(1) In 1998 and 1999, southern sea otters moved into the management zone in much greater numbers than in previous years;

(2) Analysis of carcasses indicated that southern sea otters were being exposed to environmental contaminants and diseases that could be affecting the health of the population throughout California;

(3) Rangewide counts of southern sea otters indicated that numbers were declining;

(4) Recent information, in particular the observed effects of the Exxon Valdez oil spill, indicated that southern sea otters at San Nicolas Island would not be isolated from the potential effects of a single large oil spill; and

(5) The capture and release of large groups of southern sea otters could result in substantial adverse effects on the parent population.

The biological opinion concluded with our assessment that continuation of the containment program would likely jeopardize the continued existence of the species on the grounds that: (1) Reversal of the southern sea otter's population decline is essential to the survival and recovery of the species, whereas continuation of containment could cause the direct deaths of individuals and disrupt social behavior in the parent range, thereby exacerbating population declines; and (2) expansion of the southern sea otter's distribution is essential to the survival and recovery of the species, whereas continuation of the containment program would artificially restrict the range to the area north of Point Conception, thereby increasing the vulnerability of the species to oil spills, disease, and stochastic events.

On July 27, 2000, we published in the **Federal Register** a notice of intent to prepare a supplement to our 1987 EIS on the southern sea otter translocation program (65 FR 46172), and on January 22, 2001, we issued a policy statement regarding the capture and removal of southern sea otters in the designated management zone (66 FR 6649). Based on our July 2000 biological opinion, we determined that the containment of southern sea otters was not consistent with the requirement of the ESA to avoid jeopardy to the species. The notice advised the public that we would not capture and remove southern sea otters from the management zone pending completion of our reevaluation of the southern sea otter translocation program, which would include the preparation of a supplement to our 1987 EIS and release of a final evaluation of the translocation program that contains an analysis of failure criteria.

Public scoping meetings were announced in the July 27, 2000, issue of the **Federal Register** (65 FR 46172) and were held in Santa Barbara, California, on August 15, 2000, and in Monterey, California, on August 17, 2000. We also convened the technical consultants to the Southern Sea Otter Recovery Team on September 26, 2000, to discuss scoping of the supplement. In April 2001, we published a scoping report that identified alternatives we would consider in the supplement and summarized comments received during the scoping period.

On April 3, 2003, we made available our Final Revised Recovery Plan for the Southern Sea Otter (68 FR 16305; USFWS 2003, *http://www.fws.gov/ventura/*). This document updated the original recovery plan published in 1982. The revised recovery plan incorporated significant revisions, including a shift in focus from translocation as a primary recovery action to efforts to reduce the mortality of prime-aged animals. Based on the recommendations of the recovery team, the revised recovery plan concluded that additional translocations were not the best way to accomplish the objective of increasing the range and number of southern sea otters in California. According to the revised plan, range expansion of sea otters in California would occur more rapidly if the existing population were allowed to recover autonomously than it would under a recovery program that included actively translocating sea otters. The revised plan also recommended that it would be in the best interest of southern sea otter recovery to declare the translocation program a failure, to discontinue maintenance of an otter-free zone, and to allow the sea otters currently at San Nicolas Island to remain there.

On October 7, 2005, we made available a draft SEIS on the translocation program (70 FR 58737). A draft evaluation of the translocation program was included as Appendix C. We solicited comments on both the draft SEIS and the draft evaluation during the public comment period, which began October 7, 2005 (70 FR 58737), and ended March 6, 2006 (70 FR 77380). Comments we received during the 5-month comment period, including those addressing the translocation program evaluation, are summarized in Appendix G to the revised draft SEIS.

As of December 2010, up to 46 independent southern sea otters have been counted at San Nicolas Island. Dependent pups are frequently observed with these animals. Data from quarterly counts indicate that the population has fluctuated between 13 and 46 individuals since July 1990. One sea otter pup was born at San Nicolas Island during the first year of the translocation program (1987–88), and new pups have been observed in each subsequent year. At least 151 pups are known to have

been born at the island since the program's inception.

At present, it is likely that most, if not all, of the southern sea otters at San Nicolas Island are offspring of those originally translocated to the island. This is because the original animals were translocated more than 2 decades ago, and the average life expectancy of southern sea otters in the wild is 10 to 15 years. Although it is possible that sea otters could disperse from the mainland range to San Nicolas Island, we have no information to indicate that any exchange of animals between these two locations has occurred subsequent to the return of many of the translocated sea otters to the mainland range in the early years of the program. To date, we have gathered a significant amount of data to assess capture, transport, reintroduction, and containment techniques. However, the goal of implementing a primary recovery action for the southern sea otter remains unfulfilled. The original intention, to create a colony that would provide a safeguard in the event that the parent southern sea otter population was adversely affected by a catastrophic event, such as an oil spill, has not been accomplished.

Availability of Revised Draft SEIS

Concurrent with publication of this proposed rule, we are releasing a revised draft SEIS. The revised draft SEIS updates and responds to comments received on the draft SEIS released in 2005, discusses details of the events of the translocation program from 1982 to the present, analyzes a range of alternatives for the southern sea otter translocation program, and includes a detailed draft evaluation of the program as Appendix C. The preferred alternative in the revised draft SEIS is to terminate the southern sea otter translocation program and, further, to allow southern sea otters in the former translocation and management zones to remain there upon termination of the program. Allowing sea otters to remain at San Nicolas Island and in the management zone upon termination of the translocation program is contrary to 50 CFR 17.84(d)(8)(vi) of the current regulations, which requires removal of sea otters from both locations if the translocation program is terminated. This proposed rule would implement the recommendations of the Final Revised Recovery Plan for the Southern Sea Otter, which is also the preferred alternative in the revised draft SEIS. This proposed rule would terminate the southern sea otter translocation program through removal of the regulations at 50 CFR 17.84(d) that established and govern implementation of the translocation program. Among the regulatory requirements that would be eliminated by the removal of 50 CFR 17.84(d), in its entirety, is the current requirement to remove sea otters from San Nicolas Island and from the management zone if the translocation program is terminated.

Assessment of Failure Criteria Identified in Translocation Plan

Public Law 99–625 authorized southern sea otter translocation and provided requirements for a southern sea otter translocation plan should we pursue such a plan. It did not address the possibility of the program's failure. As a consequence, it did not specify criteria that would be used to determine whether the program had failed, nor did it recommend actions that should be taken in the case of failure. When we developed the translocation plan and implementing regulations for the program, we received public comment asking us to define what constituted failure of the program and what actions we would take if the program failed. We responded by delineating specific failure criteria in the 1987 Translocation Plan (52 FR 29754; August 11, 1987).

The purpose of the failure criteria was to identify circumstances under which we would generally consider the translocation program to have failed. The five failure criteria were defined before any translocations of southern sea otters were undertaken and without the benefit of what we know today about the translocation, containment, and recovery needs of southern sea otters. The criteria focus on the status of the translocated population and, in hindsight, do not address all the circumstances that are relevant to a complete evaluation of the program. For example, the failure criteria do not address the possibility that containment might not be successfully accomplished because of southern sea otters entering the management zone from the mainland range rather than from the population at San Nicolas Island, the possibility that the founding population of the San Nicolas Island colony might be fewer than 70 animals, or even the possibility that an ''established'' population at San Nicolas Island (as defined at 52 FR 29754; August 11, 1987) may be insufficient to attain the recovery goals established for the program. Similarly, the failure criteria do not anticipate the possibility that the capture and relocation of sea otters from the management zone could result in the deaths of some animals. Ultimately, failure is determined by our inability to attain the objectives of the translocation program, which are clearly set out in the final rule for the establishment of an experimental population of southern sea otters (52 FR 29754; August 11, 1987).

In the draft translocation program evaluation (Appendix C to the revised draft SEIS), we find that the translocation program meets failure criterion 2. A summary of our analysis of each failure criterion in the draft translocation program evaluation is given below.

Criterion 1: If, after the first year following initiation of translocation or any subsequent year, no translocated southern sea otters remain within the translocation zone, and the reasons for emigration or mortality cannot be identified and/or remedied.

Criterion 1 has not been met. Southern sea otters have been observed in the translocation zone at San Nicolas Island every year since the beginning of the program.

Criterion 2: If, within 3 years from the initial transplant, fewer than 25 southern sea otters remain in the translocation zone and the reason for emigration or mortality cannot be identified and/or remedied.

Criterion 2 has been met. The initial transplant occurred in August 1987. Within 3 years of the initial transplant (August 1990), a maximum of 17 sea otters (14 independent animals and 3 pups) resided in the translocation zone.

We chose to delay declaring the translocation program a failure in 1990 because southern sea otters were reproducing, dispersal into the management zone had abated, and the California Department of Fish and Game expressed a desire to continue zonal management of southern sea otters. Although sea otters at the island continue to reproduce, the colony remains small to this day; dispersal of sea otters from the parent range into the management zone is now regularly occurring; and the California Department of Fish and Game informed us in 1997 that it would no longer be able to assist us if we resumed capturing sea otters in the management zone.

We consider emigration from San Nicolas Island to be the primary reason for the small size of the population (17 sea otters, including pups) remaining at the island within 3 years of the initial transplant. Fifty-four (54) translocated sea otters were later detected elsewhere (either back in the mainland range or in southern California waters). The number of sea otters resighted in the mainland range (36), despite the absence of a focused effort to identify them there (efforts were focused instead at San Nicolas Island and in the management zone), suggests that additional sea otters

may have returned without being detected. There is some evidence of sea otter mortality at San Nicolas Island (three sea otters were found dead at San Nicolas Island within days of being translocated), but no additional deaths of translocated sea otters at San Nicolas Island were verified. Of the animals that remain unaccounted for, it seems likely that most either emigrated successfully and escaped further detection or attempted to emigrate but died before reaching suitable habitat.

Although high rates of dispersal had been seen in all earlier sea otter translocations (Estes *et al.* 1989), we believed that the translocation to San Nicolas Island would not result in the significant dispersal of animals because of the abundance of prey items, the apparent suitability of the habitat, and the perceived barrier imposed by the surrounding deep water. After the first year of translocation, we made significant changes to the program with the intent of minimizing or eliminating emigration (53 FR 37577; September 27, 1988). These changes were implemented during the second year of the program, when we selected younger sea otters for translocation, transported sea otters more quickly and in smaller groups, abandoned the use of holding pens at the island, and released newly translocated sea otters in the vicinity of sea otters already residing at the island. Despite our efforts, none of these changes appeared to result in a decrease in emigration. In the final year of the translocation effort, we attempted to gain more information on sea otter movements by implanting radio transmitters in sea otters immediately prior to their transport to San Nicolas Island. Two of the initial three southern sea otters that received implants died before they could be transported to the island, causing us to abandon this effort.

We conclude that the translocation program has failed under criterion 2. We believe that emigration from San Nicolas Island is the primary reason that substantially fewer than 25 otters remained in the translocation zone within 3 years of the initial transplant. Although we modified the program significantly after the first year in an attempt to reduce emigration and otherwise reduce sea otter mortality associated with the program, we were unable to remedy the situation. Therefore, failure criterion 2 has been met.

The fact that the translocation program has failed under criterion 2 does not necessarily mean that the sea otter colony at San Nicolas Island is destined to disappear. In fact, it appears to have a low cumulative probability of extinction (Carswell 2008). However, the final rule establishing the program clearly states, ''The Service does not consider the mere presence of sea otters in the translocation zone as an indication that a new population is established'' (52 FR 29754 at 29774; August 11, 1987). The colony would be considered ''established'' when at least 150 southern sea otters resided at the island and the population had a minimum annual recruitment of 20 animals (52 FR 29754 at 29774; August 11, 1987). The initial high rate of dispersal of translocated sea otters from San Nicolas Island is the primary cause of failure under this criterion not only because of its direct effect on the subsequent size of the San Nicolas Island colony, but also because of its implications for the recovery strategy at the heart of the program: the intended function of the San Nicolas Island population as a self-sustaining ''reserve colony for providing stock to restore subsequently damaged areas'' in the southern sea otter's range (52 FR 29754 at 29774; August 11, 1987). The high rate of dispersal of translocated sea otters suggests it is unlikely that the colony will ever be large enough to supply the numbers of sea otters necessary to perform a successful translocation and re-establishment of population in the mainland range if the parent population were reduced or eliminated by a catastrophic event.

Criterion 3: If, after 2 years following the completion of the transplant phase, the experimental population is declining at a significant rate, and the translocated southern sea otters are not showing signs of successful reproduction (*i.e.,* no pupping is observed); however, termination of the project under this and the previous criterion may be delayed, if reproduction is occurring and the degree of dispersal into the management zone is small enough that the effort to remove southern sea otters from the management or no-otter zone would be acceptable to us and the affected State.

We are unable to evaluate whether the program has failed under criterion 3 because we never reached the minimum number of sea otters at San Nicolas Island required to complete the transplant phase of the program. The translocation plan defines the transplant phase as ending when there are at least 70 healthy southern sea otters of mixed ages and sexes within the translocation zone and we determine that the population is increasing due to natural reproduction. Although we translocated twice this number, we never achieved the requisite core population of 70 animals.

From a practical perspective, however, the transplant phase ended when the last sea otter was translocated to the island in 1990. The population declined at a significant rate from the program's inception in 1987 to 1993, at which time the number of independent sea otters at the island was 12. Although pups were observed from 1987 to 1993, there appeared to be little or no recruitment into the population. The 15 sea otters at the island in 1993 (12 independent animals and 3 pups) were fewer than the minimum number (25) required to avoid a declaration of failure under failure criterion 2; however, under provisions of failure criterion 3 we could delay termination of the program because pupping was occurring and dispersal of translocated sea otters into the management zone had abated.

The experimental population has fluctuated in number since 1993, and now appears to be increasing overall; reproduction continues to occur. Although pupping is occurring, it is not certain that the San Nicolas colony will persist. If it does persist, it will have been founded on a small subset of the core number of 70 healthy sea otters of mixed ages and sexes that were intended to found the population, a fact that has implications for the genetic makeup of the resulting population. The current rate of emigration from the island is unknown, but we now know that the deep ocean channels surrounding the island do not present the anticipated barrier to dispersal.

Criterion 4: If we determine, in consultation with the affected State and the Marine Mammal Commission, that southern sea otters are dispersing from the translocation zone and becoming established within the management zone in sufficient numbers to demonstrate that containment cannot be successfully accomplished. This standard is not intended to apply to situations in which individuals or small numbers of southern sea otters are sighted within the management zone or temporarily manage to elude capture. Instead it is meant to be applied when it becomes apparent that, over time (1 year or more), southern sea otters are relocating from the translocation zone to the management zone in such numbers that: (1) An independent breeding colony is likely to become established within the management zone; or (2) they could cause economic damage to fishery resources within the management zone. It is expected that we could make this determination within a year, provided that sufficient information is available.

Technically, criterion 4 has not been met. This criterion clearly specifies that the program would be declared a failure

if sea otters moved from the translocation zone and became established in the management zone. The criterion does not strictly apply if animals immigrate into the management zone from the parent range. Nevertheless, beginning in 1998, large groups (50 to 150 individuals) of sea otters have seasonally moved into the management zone from the parent range. Since 2006, monthly surveys have counted an average of 40 otters with considerable variation over time (standard deviation of +/− 19) (K.D. Lafferty, USGS, pers. comm. 2011). In January 2011, three pups were detected, suggesting that a permanent breeding colony may be establishing itself in the management zone. Commercial fishing interests contend that local shellfish populations available to the fishery have been reduced by the presence of these sea otters.

The difficulties associated with sea otter capture and transport, our concern for the welfare of animals removed from the management zone, the adverse effects of sea otter containment on the parent population, and the adverse effects on fisheries are concerns regardless of whether sea otters enter the management zone from the parent range or from San Nicolas Island. Although criterion 4 is specific and applies only to sea otters originating from San Nicolas Island, our experience with sea otters entering the management zone from either the parent range or the translocation zone indicates that successful containment of sea otters, or maintenance of an ''otter-free'' management zone, cannot be accomplished by simply capturing animals in the management zone and moving them to another location.

Criterion 5: If the health and well-being of the experimental population should become threatened to the point that the colony's continued survival is unlikely, despite Federal and State laws. An example would be if an overriding military action for national security was proposed that would threaten to devastate the colony and the removal of southern sea otters was determined to be the only viable way of preventing loss of the colony.

Criterion 5 has not been met. The experimental population at San Nicolas Island, although small and vulnerable, has persisted. There are no proposed Federal, State, or local actions that threaten to devastate the colony. The Department of Defense is responsible for the majority of human activity at San Nicolas Island. They have conferred with us and given consideration to southern sea otters when developing projects at San Nicolas Island. To date, no projects have posed a threat to the colony.

Conclusion

We therefore conclude that the translocation program has failed under Criterion 2. Criterion 3 cannot be evaluated. Criteria 1, 4, and 5 have not been met.

The primary purpose of the southern sea otter translocation program was to advance southern sea otter recovery, with the ultimate goal of delisting the species. Based on a broader evaluation of the translocation program against the goals for which it was undertaken and current recovery goals, in concert with the failure criteria established for the program's assessment, we again conclude that the translocation program has failed. It has failed to fulfill its purpose, and our recovery and management goals for the species cannot be met by continuing the program.

The San Nicolas Island sea otter colony remains small, and its future is uncertain. Even if the colony were to become established, the resulting population would not likely be sufficient to ensure survival of the species should the parent population be adversely affected by a widespread catastrophic event. Recovery of the southern sea otter will ultimately depend on the growth and expansion of the southern sea otter's range. Although we recognize that there are conflicts between an expanding sea otter population and fisheries that have developed in the absence of sea otters, zonal management of sea otters has proven to be ineffective and compromises the ability of the species to recover.

We therefore propose to terminate the translocation program and remove the regulations at 50 CFR 17.84(d) in their entirety. This proposed action would:

○ Terminate the designation of the experimental population of southern sea otters;

○ Abolish the southern sea otter translocation and management zones;

○ Eliminate future actions, required under the current regulations, to capture and relocate southern sea otters for the purposes of establishing an experimental population or restricting movements of southern sea otters into an ''otter-free'' management zone; and

○ Allow southern sea otters to expand their range naturally into southern California waters.

Removal of the translocation program regulations in their entirety would also eliminate the current requirement at 50 CFR 17.84(d)(8)(vi) to remove southern sea otters from San Nicolas Island and from the management zone upon termination of the program.

Regulatory Environment Upon Termination of the Translocation Program

Public Law 99–625 states that the Service, through the Secretary of the Interior, ''may'' develop and implement a plan for the relocation and management of sea otters, and then goes on to specify what must be included if such a plan is developed. Therefore, termination of the translocation program and removal of the regulations governing the program would render the specific provisions of Public Law 99–625 inoperative. The translocation and management zones would be abolished, and the exemptions under Public Law 99–625 from the duty to consult under section 7 of the ESA for defense-related activities within the former translocation zone and for all Federal activities within the former management zone, as well as the exemption from the incidental take prohibitions of the ESA and the MMPA for activities within the former management zone, would end.

Any incidental take by a Federal agency (authorized through the ESA section 7 process) or by a State or tribal government or private entity (authorized through the ESA section 10 process) would also have to be authorized under the MMPA. Under both the ESA and the MMPA, incidental take is prohibited unless it has been authorized. Section 101(a)(5)(A) of the MMPA states that we may authorize the taking of small numbers of marine mammals within a specified geographical region over periods of not more than 5 consecutive years, provided we find that the total of such taking during the period will have a negligible impact on the species or stock. Section 101(a)(5)(D) allows for similar authorization, for not more than 1 year for the incidental taking by harassment of only small numbers of marine mammals. Provisions specific to military readiness activities may also apply to the authorization of incidental take under the MMPA for defense-related agency actions.

The incidental take authorization provisions under section 101(a)(5) of the MMPA apply to activities other than commercial fishing. Take incidental to commercial fishing is authorized under different provisions of the MMPA. However, because of specific amendments to the provisions under section 118, incidental take of southern sea otters in commercial fisheries cannot be authorized under the MMPA. Therefore, incidental take of southern sea otters by commercial fisheries in southern California waters would be

prohibited, as it is now throughout the remainder of the range of the species (north of Point Conception). All intentional take would continue to be prohibited, as it is under the current regulatory environment, unless authorized under both the ESA and the MMPA.

Federal agencies proposing actions (including the permitting or funding of actions proposed by non-Federal entities) that may affect southern sea otters anywhere in southern California waters, including all actions planned within the former management zone and defense-related actions in the former translocation zone, would be required to consult with the Service under section 7 of the ESA, as they do now within the remainder of the species' range. Under section 7, we must determine whether a proposed Federal action is likely to jeopardize the continued existence of the southern sea otter. Our determination is made through the issuance of a biological opinion at the conclusion of the consultation stating our opinion whether the action, if carried out as proposed, is likely to jeopardize the continued existence of the species. If we conclude the proposed action would likely result in jeopardy, we also indicate any reasonable and prudent alternatives to the proposed action that would meet its intended purpose while avoiding jeopardy to the southern sea otter. If a proposed action is likely to jeopardize the continued existence of the southern sea otter, it may not go forward unless the Federal action agency applies for and is granted an exemption under section 7(h) of the ESA. If we determine that the proposed Federal action is not likely to jeopardize the continued existence of the southern sea otter, we may include an incidental take statement that exempts take of sea otters incidental to the proposed action from the take prohibition of section 9 of the ESA. Our incidental take statement would include terms and conditions that must be complied with to minimize the effects of any incidental take by the Federal action agency. In addition, the entity conducting the action would need to obtain incidental take authorization under the MMPA (discussed below).

The current exemption under State law for incidental take of southern sea otters in the management zone would also end once the translocation program is declared a failure. While California Fish and Game Code Section 4700 generally prohibits the take of southern sea otters, section 8664.2 of the Fish and Game Code provides that ''the taking of a sea otter that is incidental to, and not for the purpose of, the carrying out of an otherwise lawful activity within the sea otter management zone * * * is not a violation of the California Endangered Species Act * * * or Section 4700.'' Section 8664.2 further provides, ''this section shall become inoperative if the sea otter translocation experiment is declared a failure pursuant to the provisions of Public Law 99–625.''

To the extent otherwise allowable under State law, proposed non-Federal activities in California that would result in take of southern sea otters if the translocation program is terminated would require an incidental take permit from the Service under section 10(a)(1)(B) of the ESA. Among other requirements, an applicant for an incidental take permit under section 10(a)(1)(B) of the ESA must submit a conservation plan that we find minimizes and mitigates the impacts of the proposed take to the maximum extent practicable. In addition, we must find that the proposed take will avoid appreciably reducing the likelihood of the survival and recovery of the southern sea otter in the wild.

Economic Analysis

An economic analysis for this proposed rule and associated alternatives is included in our revised draft SEIS on the translocation of southern sea otters. A copy of the revised draft SEIS is posted on *http://www.regulations.gov* and may also be obtained from the Ventura Fish and Wildlife Office (see **ADDRESSES** section). When compared to the existing baseline (suspension of southern sea otter translocation and containment), the proposed rule and subsequent actions would have no economic effects except possible indirect effects that may occur as a result of regulatory changes. The benefits to fisheries that may result from enforcing a southern sea otter management zone and retaining incidental take exemptions within this zone are included in our economic analysis for comparative purposes.

Clarity of the Rule

We are required by Executive Orders 12866 and 12988 and by the Presidential Memorandum of June 1, 1998 to write all rules in plain language. This means that each rule we publish must:

(1) Be logically organized;

(2) Use the active voice to address readers directly;

(3) Use clear language rather than jargon;

(4) Be divided into short sections and sentences; and

(5) Use lists and tables wherever possible.

If you feel that we have not met these requirements, send us comments by one of the methods listing in the **ADDRESSES** section. To help us revise the rule, your comments should be as specific as possible. For example, you should tell us the numbers of the sections or paragraphs that are unclearly written, which sections or sentences are too long, the section where you feel lists or tables would be useful, *etc.*

Required Determinations

Regulatory Planning and Review

In accordance with the criteria in Executive Order 12866, this rule is not a significant regulatory action. The Office of Management and Budget (OMB) makes the final determination under Executive Order 12866. OMB bases its determination on the following four criteria:

(1) Whether the rule will have an annual effect of $100 million or more on the economy or adversely affect an economic sector, productivity, jobs, the environment, or other units of the government.

(2) Whether the rule will create inconsistencies with other Federal agencies' actions.

(3) Whether the rule will materially affect entitlements, grants, user fees, loan programs, or the rights and obligations of their recipients.

(4) Whether the rule raises novel legal or policy issues.

Regulatory Flexibility Act

Under the Regulatory Flexibility Act (RFA, as amended by the Small Business Regulatory Enforcement Fairness Act (SBREFA) of 1996), whenever a Federal agency is required to publish a notice of rulemaking for any proposed or final rule, it must prepare and make available for public comment a regulatory flexibility analysis that describes the effect of the rule on small entities (such as small businesses, small organizations, and small government jurisdictions) (5 U.S.C. 601 *et seq.*). However, no regulatory flexibility analysis is required if the head of an agency certifies that the rule would not have a significant economic impact on a substantial number of small entities. Thus, for a regulatory flexibility analysis to be required, impacts must exceed a threshold for ''significant impact'' and a threshold for a ''substantial number of small entities.'' See 5 U.S.C. 605(b). SBREFA amended the RFA to require Federal agencies to provide a statement of the factual basis for certifying that a rule would not have a significant economic impact on a substantial number of small entities.

Federal courts have held that an RFA analysis should be limited to impacts on entities subject to the requirements of the regulation, but not entities that may be indirectly affected by the regulation. This proposed rule directly affects only southern sea otters and their regulatory status in southern California waters with respect to the ESA and MMPA. Economic effects potentially resulting from future regulatory changes applicable to commercial fisheries and effects of sea otter range expansion on the nearshore marine environment, including the availability of certain prey species for harvest by commercial fishers, are indirect. The Service does not have direct regulatory authority over marine fisheries. Therefore, there are no direct effects on small businesses from the proposed termination of the translocation program. In spite of these rulings, in its guidance to Federal agencies on conducting screening analyses, the Small Business Administration (SBA) recommends considering impacts on entities that may be indirectly affected by the proposed regulation. Therefore, we prepared an Initial Regulatory Flexibility Analysis (IRFA), which we briefly summarize below, to accompany this rule.

The Service is proposing to terminate the southern sea otter translocation program and to allow all sea otters in southern California waters at the time of the program's termination to remain there. We are proposing this action because we have concluded, in a draft translocation program evaluation, that the program has failed to meet its objectives and that our recovery and management goals for the species under the ESA and MMPA cannot be met by continuing it. The Service has management authority for the southern sea otter, which is listed as ''threatened'' under the ESA and is considered ''depleted'' under the MMPA, and is authorized by regulations (50 CFR 17.84(d)(8)) implementing the translocation program under Pub. L. 99–625 to promulgate a rule to terminate the translocation program if we determine the program has failed.

Summary of Economic Analysis

A detailed economic analysis for this proposed rule and associated alternatives is included in the revised draft SEIS. The following discussion estimates the baseline and the expected economic effects of terminating the southern sea otter translocation program.

The purpose of this rule is to propose: To terminate the southern sea otter translocation program, to allow all sea otters to remain where they are upon termination of the program, and to remove the experimental population designation from the sea otters at San Nicolas Island. This action would allow southern sea otters to recolonize their historic range throughout southern California. We define the baseline (status quo) as the current physical and regulatory environment (*i.e.,* the biological and socioeconomic environment resulting from management practices that have been in place since 1993). These practices include the suspension of containment activities in the management zone. Using the current physical and regulatory environment (rather than the environment as it might be today if containment activities had not been suspended) as the baseline is essential to an accurate characterization of present conditions and to predictions of how conditions would change under each of the alternatives under consideration in the revised draft SEIS. Under baseline (current) conditions, southern sea otter movement throughout the species' range is not restricted or contained. Under the proposed rule, containment activities would not be resumed. Southern sea otters would have the ability, as they have since 1993, to continue to expand their range into southern California waters southeast of Point Conception, and to increase in number at San Nicolas Island. Accordingly, the economic effects of both the baseline and the proposed rule are the same (in that sea otters are allowed to expand their range naturally in both cases) except in the case of potential indirect economic effects on gill and trammel net fisheries stemming from regulatory changes, which we describe below. This statement should not be interpreted to mean that economic changes are not expected to occur as a result of natural range expansion. An expanding sea otter population will have numerous effects, including effects on certain commercial and recreational fisheries and the industries that depend on them. Effects of all the alternatives under consideration in the revised draft SEIS are examined in detail in that document, including an alternative that would entail resuming full implementation of the translocation program and its associated translocation and management zones (Alternative 1), the economic effects of which we present here for comparison.

Here and in the revised draft SEIS, we limit the quantitative analysis to a 10-year time horizon. (In the revised draft SEIS, we additionally describe long-term economic and other effects, but in qualitative terms only.) The rationale for limiting the quantitative analysis to 10 years is based in part on the extent of uncertainty involved in predicting sea otter range expansion, in part on the indirect nature of most projected impacts (and hence possible changes over time in the relationship between sea otter presence and resultant impacts), and in part on the uncertainty associated with management regimes and economic conditions beyond 10 years.

The uncertainty involved in predicting range expansion stems from: (1) The possibility that the southern sea otter range expansion model (Tinker *et al.* 2008a), although it is the best available, may not capture all population dynamics that might ultimately prove to be relevant to range expansion; and (2) the possibility that future variation in the vital rates and movements of southern sea otters, on which predictions are based, will be different from what has been observed in the past. The uncertainty arising from the indirect nature of most impacts stems from the fact that (1) any departure from predicted range expansion will also change associated impacts, and (2) changes in the ecosystem resulting from the presence of sea otters may occur differently than anticipated because of changes in a multitude of other variables unrelated to the presence of sea otters, such as global climate change, the spread of novel diseases or invasive species, or human activity (overexploitation of marine organisms, inputs of pollutants, and so forth). The uncertainty associated with management regimes and economic conditions results from the fact that (1) fisheries may open, close, or be subject to permit or gear restrictions for reasons unrelated to the presence or absence of sea otters, and (2) commercial fisheries revenues are driven largely by market forces (which are themselves influenced by the global economic environment) that determine consumer demand. Because of these manifold sources of uncertainty, we believe it is unreasonable to attempt to establish a baseline for the impact topics we consider, and thus to attempt to quantify impacts, beyond a limited time horizon. Although the choice of 10 years rather than 5 or 15 years is somewhat arbitrary, a review of past changes in southern sea otter population dynamics and commercial fisheries landings indicates that a 10-year time horizon represents a reasonable timeframe within which to quantify impacts. Whether sea otters would re-occupy other areas of the Southern California

Bight in subsequent years would be a function of sea otter demographic rates, food supply, and other variables. Based on past rates of range expansion, it is expected that sea otters would not be present in most areas of southern California for decades.

To capture some of the uncertainty involved in forecasting range expansion, we present range expansion in terms of upper and lower confidence bounds. To the extent that the range expansion model captures the key population dynamics and that future variation in vital rates and movements is not fundamentally different from the range of variation already observed, these bounds have a 95-percent probability of encompassing the realized range expansion. Within the 10-year time horizon, economic effects are projected for two areas where sea otter numbers are expected to increase under baseline conditions: (1) The coastline from Point Conception to Carpinteria (lower 95 percent confidence bound) or Oxnard (upper 95 percent confidence bound), and (2) San Nicolas Island. We project that an expanding sea otter population will have economic effects on commercial fisheries (sea urchin, crab, lobster, and sea cucumber), recreational fisheries (lobster), and the sea urchin processing industry in southern California. Assumptions underlying the economic analysis are described in Chapter 6 of the revised draft SEIS. Numerous other non-economic effects are expected to occur as a result of sea otter range expansion within 10 years. We discuss these effects in the revised draft SEIS, but because these effects are difficult or impossible to quantify in economic terms, we do not discuss them here.

Baseline. Selected fisheries, both commercial (sea urchin, crab, lobster, and sea cucumber) and recreational (lobster), would likely be eliminated in mainland coastline areas predicted to be re-occupied by sea otters over the next 10 years: Point Conception to Carpinteria (lower bound) or Oxnard (upper bound). These fisheries are also likely to be affected, to some degree, by a growing sea otter population at San Nicolas Island. During this period, commercial sea urchin landings averaging 56,360 to 61,016 pounds annually along the affected portion of the mainland coastline are expected to be eliminated. Average annual landings at San Nicolas Island are expected to be reduced from 351,333 pounds to 324,280 pounds. These losses represent 1 percent and 0.2 percent, respectively, of annual commercial sea urchin landings in southern California. Commercial lobster landings averaging 54,674 to 75,649 pounds annually along the affected portion of the mainland coastline are expected to be eliminated. Average annual landings at San Nicolas Island are expected to be reduced from 41,622 pounds to 38,417 pounds. These losses represent 8 to 11 percent and 0.4 percent, respectively, of annual commercial lobster landings in southern California. Commercial crab landings averaging 253,572 to 385,743 pounds annually along the affected portion of the mainland coastline are expected to be eliminated. Average annual landings at San Nicolas Island are expected to be reduced from 10,634 pounds to 9,816 pounds. These losses represent 23 to 35 percent and 0.06 percent, respectively, of annual commercial crab landings in southern California. Commercial sea cucumber landings averaging 155,714 to 158,636 pounds annually along the affected portion of the mainland coastline are expected to be eliminated. Average annual landings at San Nicolas Island are expected to be reduced from 53,683 to 49,549 pounds. These losses represent 27 to 28 percent and 1.5 percent, respectively, of annual commercial sea cucumber landings in southern California. Also during this 10-year period, the seafood processing industry would be affected by the declining sea urchin harvest. However, because the decline in sea urchin harvest represents less than 2 percent of the sea urchin harvest in southern California over the next 10 years, anticipated impacts on the seafood processing industry would be negligible.

With respect to the recreational dive industry, lobster dive trips on commercial passenger fishing vessels along the affected mainland coastline are negligible. Dive trips at San Nicolas Island are expected to be reduced from an annual average of 434 to 401. This loss represents approximately 0.5 percent of total dive trips taken annually in southern California, assuming divers do not choose to dive at a different location. In the longer term, those areas re-occupied by sea otters would likely cease to support commercial and recreational shellfish fisheries, but the magnitude and timing of this potential change is unknown.

Economic Effects of Proposed Rule (Alternative 3C). This proposed rule would not result in economic effects beyond those described above for baseline conditions, except in the case of potential indirect economic effects stemming from regulatory changes, namely the elimination of incidental take exemptions associated with the management zone upon termination of the translocation program. Federal agencies planning activities that may affect sea otters in southern California would be required to consult with the Service under the ESA, and if their activities would result in take of southern sea otters, to seek authorization for incidental take under both the ESA and the MMPA. The economic effects of this change are expected to be negligible in the context of already existing consultation and permitting requirements for other endangered or threatened species and marine mammals under the ESA and MMPA, particularly in light of the fact that few otherwise legal activities result in take of southern sea otters and the expectation that sea otters would not be present in most areas of southern California for decades. If otherwise allowable under applicable State law, non-Federal activities that would result in take of southern sea otters in California would require an incidental take permit from the Service under the ESA and authorization for incidental take of sea otters under the MMPA. Incidental take of southern sea otters in commercial fisheries cannot be authorized under the MMPA. Therefore, incidental take of southern sea otters in commercial fisheries throughout southern California would be prohibited, as it is currently prohibited in the remainder of the range of the species (north of Point Conception, California).

Gill and trammel nets are known to be lethal to sea otters (Herrick and Hanan 1988; Wendell *et al.* 1986; Cameron and Forney 2000; Carretta 2001; Forney *et al.* 2001). Therefore, the regulatory changes associated with this proposed rule may indirectly affect portions of the commercial halibut and white seabass fisheries utilizing gill and trammel net gear. The use of gill and trammel nets is already banned throughout much of California. With respect to southern California, the Marine Resources Protection Act of 1990 (California Constitution Article 10B) prohibits the use of gill and trammel nets in waters less than 70 fathoms or within 1 mile of the Channel Islands, whichever is less, and generally within 3 nautical miles offshore of the mainland coast from Point Arguello to the Mexican border. However, some areas within southern California waters are characterized by a relatively shallow shelf that extends beyond the area currently closed to gill net fishing. The primary fisheries using gill and trammel net gear in these areas target halibut and white seabass. Effects on these fisheries would occur if the State acted, in response to regulatory changes associated with this rule, to extend the existing gill and trammel net

closure in southern California waters to depths that would be fully protective of sea otters. Furthermore, effects would occur only in areas where sea otters are not already fully protected, and likely only in areas that sea otters were expected to recolonize in the near future. (A closure to protect sea otters would not likely be imposed in areas where sea otters did not occur and were not expected to occur in the near future.) No effects would occur at San Nicolas Island because incidental take by commercial fisheries is currently prohibited within the translocation zone and would continue to be prohibited upon termination of the program.

Estimated annualized costs for the commercial halibut fishery range from $0 (no additional closure) to $250,000 (immediate closure of the affected area), representing a loss of 0 to 21 percent to the commercial halibut fishery in southern California. To calculate the present value for a 10-year time period, the social discount rates of 3 percent and 7 percent are applied per OMB guidance. The 10-year present value impact to the commercial halibut fishery would be approximately $2.2 million discounted at 3 percent or $1.7 million discounted at 7 percent. Estimated annualized costs for the white seabass fishery range from $0 (no additional closure) to $285,000 (immediate closure of the affected area), representing a loss of 0 to 42 percent to the commercial white seabass fishery in southern California. The 10-year present value impact to the commercial white seabass fishery would be approximately $2.3 million discounted at 3 percent or $1.7 million discounted at 7 percent. Estimates of maximum effects represent an upper bound. Realized effects are likely to be lower because (1) the State may not impose an immediate closure, (2) participants in the fishery already using alternate gear would benefit from the increased availability of halibut and white seabass, and (3) participants in the fishery using gill and trammel nets may switch gear or choose to fish elsewhere.

Economic Effects from Enforcement of the Management Zone (Alternative 1). As discussed, this proposed rule (Alternative 3C) would not result in any additional economic effects compared to the baseline, except the potential indirect effects stemming from regulatory changes summarized above. For comparison purposes, we present the economic effects that would occur if southern sea otters were excluded from the management zone through a resumption of zonal management under Alternative 1. These effects are further detailed in the revised draft SEIS. Implementation of sea otter containment in the management zone would affect the coastline southeast of Point Conception. Sea otters have been seasonally sighted in the Cojo Anchorage area since 1998. Since 2006, monthly surveys have counted an average of 40 otters with considerable variation over time (standard deviation of +/− 19) (K.D. Lafferty, USGS, pers. comm. 2011). The enforcement of containment in the management zone, if fully successful, would remove any sea otters from these areas and re-establish an otter-free management zone, thereby possibly increasing fishery harvests and also increasing the Service's administrative costs. The cost to the Service of implementing a zonal management program to contain southern sea otter range expansion over 10 years would total approximately $4.3 million discounted at 7 percent or $5.6 million discounted at 3 percent.

Effects on fisheries could occur due to (1) increased shellfish populations resulting from the elimination of sea otter predation currently occurring within the management zone (*i.e.,* the restoration of a pre-sea otter baseline), and (2) increased shellfish populations due to the future containment of sea otters. These estimates differ from the baseline not only in direction but also in magnitude because the baseline does not account for effects on commercial and recreational fisheries that would result from the removal of sea otters that are currently in the management zone. If sea otter containment in the management zone were to be enforced and fully successful, then the estimated annualized ex-vessel revenue benefit for the commercial sea urchin, lobster, crab, and sea cucumber fisheries would be $184,000 to $186,000, $420,000 to $530,000, $210,000 to $310,000, and $116,000 to $118,000, respectively, relative to the baseline. To calculate the present value for a 10-year time period, the social discount rates of 3 percent and 7 percent are applied per OMB guidance. Discounted at 3 percent, the 10-year present value impact for the commercial sea urchin, lobster, crab, and sea cucumber fisheries would be $1.4 to $1.5 million, $3.2 to $4.1 million, $1.6 to $2.4 million, and $893,000 to $903,000, respectively. Discounted at 7 percent, the 10-year present value impact for the commercial sea urchin, lobster, crab, and sea cucumber fisheries would be $1.1 million, $2.3 to $2.9 million, $1.1 to $1.7 million, and $641,000 to $653,000, respectively. Minor positive effects on the sea urchin processing industry could result from an increase in sea urchin landings, depending on operating capacity and consumer demand. Recreational dive trips may increase along the coastline from Point Conception to Santa Barbara, but this increase is expected to result in negligible economic benefit because the mainland coastline is not an important area for recreational lobster diving.

Effects on Small Businesses

Potential impacts to small businesses, such as owners of halibut fishing vessels and white seabass fishing vessels, are summarized below. For more information pertaining to the economic impacts, please refer to the revised draft SEIS.

The SBA defines a ''small business'' as one with an annual revenue or number of employees that meets or is below an established size standard. The SBA ''small business'' size standard is $4 million for ''Finfish Fishing'' and ''Shellfish Fishing'' (North American Industry Code (NAICS) 114111 and 114112) and fewer than 500 employees for ''Fresh and Frozen Seafood Processing'' (NAICS 311712). Most of the businesses in the finfish and shellfish fishing industries have fewer than 5 employees, and all of the businesses in the seafood processing industry have fewer than 500 employees. Therefore, all businesses participating in these industries are considered ''small businesses.'' The numbers of commercial fishing vessels participating in selected southern California fisheries in the area expected to be affected within 10 years and in southern California as a whole are shown in Table 1. Although some establishments may own more than one vessel, we utilize the vessel estimate provided by California Department of Fish and Game to ensure a conservative approach to our analysis of the number and proportion of small entities affected (*i.e.,* we may overestimate the number and proportion of small entities affected).

Table 1. Number of commercial fishing vessels making at least one landing in selected fisheries south of Point Conception

	Fishery	Number of vessels making at least one landing in southern California (2000-2009 average)	Number of vessels making at least one landing from area expected to be affected within 10 years (2000-2009 average)	Percentage of Small Businesses Affected Under Proposed Rule	Percentage of Small Businesses Affected Under Alternative 1
Finfish Fishing	Calif. halibut, with set and drift gill nets	49	19	39%	—
	Calif. halibut, all other gear	138	57	41%	—
	White seabass, with set and drift gill nets	45	18	40%	—
	White seabass, all other gear	42	25	60%	—
Shellfish Fishing	Sea urchin	131	18-20*	—	14% - 15%*
	Calif. lobster	169	23-31*	—	14% - 18%*
	Crab (all species)	147	34-58*	—	23% - 39%*
	Sea cucumber	49	13-15*	—	27% - 31%*

Source: California Department of Fish and Game (2010, 2011)
*Numbers of vessels are presented as a range not because of uncertainty in the number of vessels making at least one landing from a particular statistical block but because of uncertainty regarding the extent of area likely to be recolonized by sea otters within 10 years.

Impacts on Small Businesses Due to Proposed Rule (Alternative 3C)

The proposed rule would not result in any effects on small entities, relative to the baseline, except potential indirect economic impacts stemming from regulatory changes by the State. Thus, the sea urchin, lobster, crab, and sea cucumber industries would not be impacted by the proposed rule. However, an additional gill and trammel net closure, if imposed by the State in response to the elimination of incidental take exemptions associated with the management zone, would affect portions of the halibut and white seabass fisheries utilizing gill and trammel net gear in Santa Barbara County and Ventura County within the next 10 years. Industries in Los Angeles, Orange, San Diego, Santa Barbara, and Ventura Counties (hereafter referred to collectively as ''southern California'') are included in the analysis because of their proximity to the affected area.

Estimates of the relative impact on vessels and the number of vessels affected may be overestimates because the data available to us do not allow us to account for vessels participating in multiple fisheries. Additionally, estimates of relative impact are averages (*i.e.,* some vessels will be more affected than others in the same fishery). All estimates of decreases in ex-vessel revenues assume that fishers would not choose to fish elsewhere or with alternate gear and hence would not supplement their revenues or increase harvest pressure in other areas. Finally, ex-vessel values reflect gross rather than net revenues and thus overestimate impacts because they fail to account for the savings in boat fuel and labor that could be re-employed elsewhere if commercial fishing activity in affected areas were reduced. Ex-vessel revenue and vessel number data are from the California Department of Fish and Game.

Table 2 shows the potential indirect effects if the State closes additional areas to gill and trammel net fishing in Santa Barbara and Ventura Counties. Potential indirect annualized effects on the commercial halibut fishery range from $0 (no additional closure) to $250,467 (immediate closure of the affected area), representing a loss to the commercial halibut fishery in southern California of 0 to 41 percent of landings made using gill and trammel net gear only (or 0 to 21 percent of all halibut landings) relative to the baseline. Potential indirect annualized effects on the commercial white seabass fishery range from $0 (no additional closure) to $284,638 (immediate closure of the affected area), representing a loss to the commercial white seabass fishery in southern California of 0 to 44 percent of landings made using gill and trammel net gear only (or 0 to 42 percent of all white seabass landings) relative to the baseline.

TABLE 2—ESTIMATED MAXIMUM ANNUAL IMPACT ON EX-VESSEL REVENUE FOR SELECTED FISHERIES FROM THE PROPOSED RULE (2009$)

	Total annualized industry gross revenue loss (2012–2021)	Annual gross revenue decrease per small business
Halibut Fishery (with set and drift gill nets)	$250,467	$13,182.
Seabass Fishery (with set and drift gill nets)	$284,638	$15,813.
Sea Urchin Fishery	No impact	No impact.
Spiny Lobster Fishery	No impact	No impact.
Crab Fishery	No impact	No impact.
Sea Cucumber Fishery	No impact	No impact.

Impacts on Small Businesses Due to Alternative 1

For comparison purposes, we analyze the effects on small entities that would occur if southern sea otters were excluded from the management zone through a resumption of zonal management (full implementation of the translocation program) as detailed in the revised draft SEIS under Alternative 1. These effects are also indirect and stem from estimated impacts of sea otter predation on species targeted by commercial shellfish fisheries. If zonal management were resumed as described under Alternative 1 in the revised draft SEIS, the following industries would be affected, relative to the baseline: (1) Shellfish Fishing (NAICS 114112), and (2) Seafood Manufacturing (NAICS 3117). Industries that support recreational diving are not included here because economic impacts to those entities are expected to be negligible, as shown in the baseline section. Under baseline conditions, changes over the next 10 years are expected to occur along the coastlines of Santa Barbara County and Ventura County as a result of a naturally expanding sea otter population. Alternative 1 would prevent this expansion and would entail the removal of sea otters currently residing within the management zone. Enforcement of a management zone, if successful, would benefit commercial shellfish fisheries because competition with sea otters would be eliminated. Industries in southern California are included in the analysis because of their proximity to the affected area. Within the shellfish fishing industry, we analyze four fisheries in depth: The sea urchin fishery, lobster fishery, crab fishery, and sea cucumber fishery. These predation effects are expected to occur under the baseline and under implementation of the proposed rule, but would not occur if sea otters were excluded from all southern California waters except those surrounding San Nicolas Island, as would be required under Alternative 1.

Impacts under Alternative 1 are summarized in Table 3. Potential indirect annualized effects on the commercial sea urchin fishery are estimated to be $184,054 to $186,140 relative to the baseline, representing a gain to the commercial sea urchin fishery in southern California of 3 percent of landings relative to the baseline. Potential indirect annualized effects on the commercial lobster fishery are estimated to be $419,812 to $528,611 relative to the baseline, representing a gain to the commercial lobster fishery in southern California of 6 to 7 percent of landings relative to the baseline. Potential indirect annualized effects on the commercial crab fishery are estimated to be $207,601 to $311,647 relative to the baseline, representing a gain to the commercial crab fishery in southern California of 15 to 16 percent of landings relative to the baseline. Potential indirect effects on the commercial sea cucumber fishery are estimated to be $116,157 to $118,338 relative to the baseline, representing a gain to the commercial sea cucumber fishery in southern California of 15 percent of landings relative to the baseline. Minor positive indirect effects on the sea urchin processing industry could result from an increase in sea urchin landings, depending on operating capacity and consumer demand. Thirty-two (32) seafood product preparation and packaging entities meet the SBA ''small business'' size standard in southern California. Maximum benefits would reflect the gain to the commercial sea urchin fishery in southern California of 3 percent of landings relative to the baseline.

TABLE 3—ESTIMATED ANNUAL EX-VESSEL REVENUE BENEFIT FOR SELECTED FISHERIES FROM ALTERNATIVE 1 (2009 $)

	Annualized industry gross revenue benefit (2012–2021)	Gross revenue annual impact per small business
Sea Urchin Fishery	$184,054 to $186,140	$9,307 to $10,225.
Spiny Lobster Fishery	$419,812 to $528,611	$17,052 to $18,253.
Crab Fishery	$207,601 to $311,647	$5,373 to $6,106.
Sea Cucumber Fishery	$116,157 to $118,338	$7,889 to $8,935.
Halibut Fishery (with set and drift gill nets)	No impact	No impact.
Seabass Fishery (with set and drift gill nets)	No impact	No impact.

Under Alternative 1, the regulatory environment for fishing would remain unchanged relative to the baseline. Because any potential effects on the portion of the halibut and seabass fisheries using gill and trammel net gear would stem from regulatory changes, there is no effect on these two fisheries.

Under Alternative 1, impacts to the sea urchin processing industry would be a positive function of the change in sea urchin landings. Impacts to the sea urchin processing industry would be dependent upon whether individual companies are operating at capacity and whether they are capable of processing different seafood products. If companies are operating at capacity, then there may

be room for growth in the industry for an additional company. If companies are not operating at capacity, then revenues may increase in relation to any increase in raw product. Companies receiving sea urchins harvested along the affected coastline would be disproportionately affected. Because of the expected 3 percent increase in sea urchin inputs from the Southern California Bight, Alternative 1 is not expected to have a significant impact on the seafood processing industry.

Small Business Regulatory Enforcement Fairness Act

Amendment of Title 50 of the Code of Federal Regulations to remove § 17.84(d) is not a major rule under 5 U.S.C. 804(2). Our draft economic analysis concludes that removal of 50 CFR 17.84(d):

(a) Would not have an annual effect on the economy of $100 million or more. The maximum annualized ex-vessel revenue loss to the halibut and white seabass industries would be $535,105 (10-year present value of $4.5 million discounted at 7 percent and $3.4 million discounted at 3 percent).

(b) Would not cause a major increase in costs or prices for consumers, individual industries, Federal, State, or local government agencies, or geographic regions.

(c) Would not have significant adverse effects on competition, employment, investment, productivity, innovation, or the ability of U.S.-based enterprises to compete with foreign-based enterprises.

Unfunded Mandates Reform Act

In accordance with the Unfunded Mandates Reform Act (2 U.S.C. 1501 *et seq.*), the Service makes the following findings:

(a) This proposed rule would not produce a Federal mandate. In general, a Federal mandate is a provision in legislation, statute, or regulation that would impose an enforceable duty upon State, local, tribal governments, or the private sector and includes both ''Federal intergovernmental mandates'' and ''Federal private sector mandates.'' These terms are defined in 2 U.S.C. 658(5)–(7). ''Federal intergovernmental mandate'' includes a regulation that ''would impose an enforceable duty upon State, local, or tribal governments'' with two exceptions. It excludes ''a condition of federal assistance.'' It also excludes ''a duty arising from participation in a voluntary Federal program,'' unless the regulation ''relates to a then-existing Federal program under which $500,000,000 or more is provided annually to State, local, and tribal governments under entitlement authority,'' if the provision would ''increase the stringency of conditions of assistance'' or ''place caps upon, or otherwise decrease, the Federal Government's responsibility to provide funding'' and the State, local, or tribal governments ''lack authority'' to adjust accordingly. (At the time of enactment, these entitlement programs were: Medicaid; AFDC work programs; Child Nutrition; Food Stamps; Social Services Block Grants; Vocational Rehabilitation State Grants; Foster Care, Adoption Assistance, and Independent Living; Family Support Welfare Services; and Child Support Enforcement.) ''Federal private sector mandate'' includes a regulation that ''would impose an enforceable duty upon the private sector, except (i) a condition of Federal assistance; or (ii) a duty arising from participation in a voluntary Federal program.''

The proposed rule to terminate the southern sea otter translocation program does not impose a legally binding duty on non-Federal government entities or private parties.

(b) We do not believe that this rule would significantly or uniquely affect small governments because it would not produce a mandate of $100 million or greater in any year; that is, it is not a ''significant regulatory action'' under the Unfunded Mandates Reform Act. This determination is based on the economic analysis prepared as part of the revised draft SEIS on the sea otter translocation program. As such, a Small Government Agency Plan is not required.

Takings

In accordance with Executive Order 12630 ''Government Actions and Interference with Constitutionally Protected Private Property Rights,'' we have analyzed the potential takings implications of terminating the southern sea otter translocation program. This assessment concludes that the proposed amendment to Title 50 of the Code of Federal Regulations to remove § 17.84(d) does not pose significant takings implications. While small segments of the fishing industry may be indirectly affected by changes resulting from termination of the southern sea otter translocation program, fishery resources are public resources in which private entities have no Constitutionally protected property interest.

Federalism Assessment

In accordance with Executive Order 13132, the proposed amendment to Title 50 of the Code of Federal Regulations to remove § 17.84(d) does not have significant Federalism effects. A Federalism assessment is not required. The proposed amendment would not have substantial direct effects on the State, in the relationship between the Federal Government and the State, or on the distribution of power and responsibilities among the various levels of government. In keeping with Department of the Interior policy, we requested information from, and coordinated with, the State of California to the extent possible on the development of this proposed rule.

Civil Justice Reform

In accordance with Executive Order 12988, the proposed amendment to Title 50 of the Code of Federal Regulations to remove § 17.84(d) does not unduly burden the judicial system and meets the requirements of sections 3(a) and 3(b)(2) of the Order.

Paperwork Reduction Act

The proposed amendment to Title 50 of the Code of Federal Regulations to remove § 17.84(d) does not contain any information collection requirements for which Office of Management and Budget approval under the Paperwork Reduction Act, 44 U.S.C. 3501 *et seq.,* is required. The proposed amendment would not impose new record keeping or reporting requirements on State or local governments, individuals, businesses, or organizations.

National Environmental Policy Act

We have considered this action with respect to the National Environmental Policy Act of 1969 (42 U.S.C. 4321 *et seq.*) and have determined that this action requires the preparation of an environmental impact statement. A revised draft SEIS is now available for review. You may obtain a copy of this document at *http://www.regulations.gov,* at *http://www.fws.gov/ventura/,* or by contacting the Ventura Fish and Wildlife Office (see **ADDRESSES** section).

Government-to-Government Relationship With Tribes

In accordance with the President's memorandum of April 29, 1994, Government-to-Government Relations with Native American Tribal Governments (59 FR 22951), Executive Order 13175, and the Department of the Interior's manual at 512 DM 2, we readily acknowledge our responsibility to communicate meaningfully with federally recognized Tribes on a Government-to-Government basis. We have evaluated possible effects on federally recognized Indian Tribes and have determined that there are no effects.

Energy Supply, Distribution, or Use (Executive Order 13211)

On May 18, 2001, the President issued Executive Order 13211 on regulations that significantly affect energy supply, distribution, and use. Executive Order 13211 requires agencies to prepare Statements of Energy Effects when undertaking certain actions. This rule is not expected to significantly affect energy supplies, distribution, and use. Although adoption of this proposed rule would result in additional consultation requirements for energy activities that may affect southern sea otters, in the context of the current regulatory environment, it would not significantly affect energy supplies, distribution, and use. Therefore, this action is not a significant energy action and no Statement of Energy Effects is required.

References Cited

A complete list of all references cited in this proposed rule is available on *http://www.regulations.gov* or upon request from the Ventura Fish and Wildlife Office (see **ADDRESSES** section).

Author

The primary author of this proposed rule is Lilian Carswell of the Ventura Fish and Wildlife Office (see **ADDRESSES** section).

List of Subjects in 50 CFR Part 17

Endangered and threatened species, Exports, Imports, Reporting and recordkeeping requirements, Transportation.

Proposed Regulation Promulgation

Accordingly, for the reasons set forth in the preamble, we propose to amend part 17, subchapter B of chapter I, title 50 of the Code of Federal Regulations, as set forth below:

PART 17—[AMENDED]

1. The authority citation for part 17 is revised to read as follows:

Authority: 16 U.S.C. 1361–1407; 16 U.S.C. 1531–1544; 16 U.S.C. 4201–4245; unless otherwise noted.

§ 17.84 [Amended]

2. Amend § 17.84 by removing and reserving paragraph (d).

Dated: July 22, 2011.

Rachel Jacobson,

Acting Assistant Secretary for Fish and Wildlife and Parks.

[FR Doc. 2011–21556 Filed 8–25–11; 8:45 am]

BILLING CODE 4310–55–P

Notices

Federal Register

Vol. 76, No. 166

Friday, August 26, 2011

This section of the FEDERAL REGISTER contains documents other than rules or proposed rules that are applicable to the public. Notices of hearings and investigations, committee meetings, agency decisions and rulings, delegations of authority, filing of petitions and applications and agency statements of organization and functions are examples of documents appearing in this section.

DEPARTMENT OF AGRICULTURE

Agricultural Research Service

Notice of Intent To Renew Information Collection

AGENCY: Agricultural Research Service, USDA.

ACTION: Notice and Request for Comment.

SUMMARY: The United States Department of Agriculture (USDA), Agricultural Research Service (ARS) seeks comments on the intent of the United States National Arboretum (USNA) to renew an information collection that expires December 31, 2011. The information collection serves as a means to collect fees for certain uses of the facilities and grounds, and for programs and services. This includes fees for use of the grounds and facilities, as well as for commercial photography and cinematography. Fees generated will be used to defray USNA expenses or to promote the missions of the USNA.

DATES: Comments on this notice must be received by October 25, 2011 to be assured of consideration.

ADDRESSES: You may submit comments by any of the following methods:

- *E-mail:* *colien.hefferan@ars.usda.gov.*
- *Fax:* 202–245–4514.
- *Mail:* Director, U.S. National Arboretum, Beltsville Area, Agricultural Research Service, 3501 New York Avenue, NE., Washington, DC 20002.
- *Hand Delivery/Courier:* Director, U.S. National Arboretum, Beltsville Area, Agricultural Research Service, 3501 New York Avenue, NE., Washington, DC 20002.

SUPPLEMENTARY INFORMATION:

Title: Use of Grounds and Facilities as well as Commercial Photography and Cinematography.

OMB Number: 0518–0032.

Expiration Date: 3 years from date of approval.

Type of Request: Renewal of approved information collection.

Abstract: The mission of the U.S National Arboretum (USNA) is to serve the public need for scientific research, education, and gardens that conserve and showcase plants to enhance the environment. The USNA is a 446-acre facility, open to the general public for purposes of education and passive recreation. The USNA receives approximately 550,000 visitors on the ground each year. Many garden clubs and societies utilize the USNA grounds to showcase their activities. The USNA is a national center for public education that welcomes visitors in a stimulating and aesthetically pleasing environment.

Section 890(b) of the Federal Agriculture Improvement and Reform Act of 1996, Public Law 104–127 (20 U.S.C. 196), expanded the authorities of the Secretary of Agriculture to charge reasonable fees for the use of USNA facilities and grounds. These authorities include the ability to charge reasonable fees for temporary use by individuals or groups of USNA facilities and grounds for any purpose consistent with the mission of the USNA. The Secretary also has the authority to charge reasonable fees for tram tours and for the use of the USNA for commercial photography and cinematography. All rules and regulations noted in 7 CFR 500, subpart 2A, will apply to individuals or groups granted approval to use the facilities and grounds. In order to administer the use of the USNA facilities and to determine if the requested use is consistent with the mission of the USNA, it is necessary for the USNA to obtain information from the requestor.

Each request will require the completion of an application and submission of an application fee. The application is simple and requires only information readily available to the requestor. The requestor is asked to indicate by whom and for what the purpose the USNA facilities are to be used. Applications are available in hard copy format as well as electronic format on the USNA Web site *http://www.usna.usda.gov*. Completed permit requests are received in person, by mail, and by facsimile.

Paperwork Reduction Act: In accordance with the Office of Management and Budget (OMB) Regulations (5 CFR part 1320) implementing the Paperwork Reduction Act of 1995 (44 U.S.C. Chapter 35), the information collection and recordkeeping requirements that will be imposed will be submitted to OMB for approval. These requirements will not become effective prior to OMB approval.

Estimate of Burden

Estimated Number of Responses: The USNA estimates 420 requests for the use of facilities and 25 requests for photography and cinematography. For each request, an e-mail is forwarded to the curator asking permission to use the facility. Once confirmation is received from the curator a reservation is placed on the calendar. A letter is written to the requestor confirming the use of the facility. There are times when a form is returned to the requestor and/or a follow-up telephone conversation may be necessary to request additional information. Each request takes approximately 30 minutes to process.

Estimated Total Annual Burden on Respondents: The total cost for responding is approximately $5,146 for 222.5 hours of time at $23 per hour.

Obtaining Permit Requests: In addition to the current process of obtaining and submitting the permit requests in person, by mail, and by facsimile, the application for photography and cinematography is available on the USNA Web site: *http://www.usna.usda.gov/Information/facilities/photographyapp.pdf.* The application for the use of facilities will be available on the Web site by the end of the calendar year. Completed permit requests can be submitted in person or by mail to the Administrative Office, USDA, ARS, U.S. National Arboretum, 3501 New York Avenue, NE., Washington, DC 20002. Permit requests can also be faxed to 202–447–2811.

Comments: Comments are invited on whether the proposed collection is necessary for the proper performance of the functions of the agency, including whether the information will have practical utility; the accuracy of the agency's estimate of the burden of the proposed collection of information, including the validity of the methodology and assumptions used; ways to enhance the quality, utility, and clarity of the information to be collected; and ways to minimize the burden of the collection on those who are to respond, including through the use of appropriate automated,

electronic, mechanical, or other technical collection techniques or other forms of information technology, *e.g.,* permitting electronic submission of responses.

Dated: August 8, 2011.

Edward Knipling,

Administrator, ARS.

[FR Doc. 2011–21847 Filed 8–25–11; 8:45 am]

BILLING CODE 3410–03–P

DEPARTMENT OF AGRICULTURE

Economic Research Service

Notice of Intent To Request New Information Collection

AGENCY: Economic Research Service, USDA.

ACTION: Notice and request for comments.

SUMMARY: In accordance with the Paperwork Reduction Act of 1995, this notice invites the general public and other public agencies to send comments regarding any aspect of this proposed information collection. This is a new collection for the Rural Establishment Innovation Survey.

DATES: Written comments on this notice must be received on or before October 25, 2011 to be assured of consideration.

ADDRESSES: Address all comments concerning this notice to Tim Wojan, Resource and Rural Economics Division, Economic Research Service, U.S. Department of Agriculture, 1800 M St., NW., Room N4110, Washington, DC 20036–5801. Comments may also be submitted via fax to the attention of Tim Wojan at 202–694–5756 or via e-mail to *twojan@ers.usda.gov.* Comments will also be accepted through the Federal eRulemaking Portal. Go to *http://www.regulations.gov,* and follow the online instructions for submitting comments electronically.

All written comments will be open for public inspection at the office of the Economic Research Service during regular business hours (8:30 a.m. to 5 p.m., Monday through Friday) at 1800 M St., NW., Room N4110, Washington, DC 20036–5801.

All responses to this notice will be summarized and included in the request for Office of Management and Budget approval. All comments and replies will be a matter of public record. Comments are invited on: (a) Whether the proposed collection of information is necessary for the proper performance of the functions of the agency, including whether the information shall have practical utility; (b) the accuracy of the agency's estimate of the burden of the proposed collection of information, including the validity of the methodology and assumptions used; (c) ways to enhance the quality, utility, and clarity of the information to be collected; and (d) ways to minimize the burden of the collection of information on those who are to respond, including use of appropriate automated, electronic, mechanical, or other technological collection techniques or other forms of information technology.

FOR FURTHER INFORMATION CONTACT: For further information contact Tim Wojan at the address in the preamble. Tel. 202–694–5419.

SUPPLEMENTARY INFORMATION:

Title: Rural Establishment Innovation Survey.

OMB Number: 0536–XXXX.

Expiration Date: Three years from the date of approval.

Type of Request: New collection.

Abstract: This survey of business establishments, funded through USDA's Rural Development Mission Area, will be conducted over a 6-month period with up to 30,000 respondents to collect information on rural tradable business sectors such as manufacturing and professional services. This information will contribute to a better understanding of how rural businesses and their communities are dealing with the increasing competitive pressures and opportunities associated with the spread of new information technologies through our economy and the business and community characteristics associated with effective response to these pressures and opportunities. This information is critical to the Rural Development Mission Area's aim of creating jobs, developing new markets and increasing competitiveness for rural businesses and communities.

The information to be collected by the Rural Establishment Innovation Survey is necessary to understand: (1) The adoption of innovative practices and their contribution to firm productivity; (2) the availability and use of local and regional assets (such as workforce education, local financial institutions, strong local business and other economic associations, and transportation infrastructure) and the association of these assets with successful adjustment; and (3) the extent and importance of participation in Federal, State and local programs designed to promote rural business vitality and growth. This need is made more urgent by increased international competition in goods and some service markets, particularly from low labor cost countries. The traditional cost advantage of domestic rural establishments has been significantly eroded by these developments, requiring emphasis on new products, new processes, new marketing channels and improved customer service. A thorough understanding of the viability of the rural business sector requires collecting information on the capability for innovation.

As the first collection of information devoted specifically to innovation in rural business establishments, the proposed survey will complement other Federal efforts in gauging innovative activity in the private sector. Information on formal research and development (R&D) activities is collected by the National Science Foundation using the Business R&D and Innovation Survey. While some of this formal research and development activity takes place in nonmetropolitan counties, it is anticipated that the great majority of rural innovation occurs less through the creation of new patentable products than through the adoption of new practices and niche marketing. The emphasis of the proposed collection will be on understanding the process of innovation in business establishments as opposed to measuring R&D inputs.

Another difference between this and other Federal surveys on innovative activity will be the focus on constraints to innovation stemming from nonmetropolitan locations. Information on the availability of skilled workers and the ability to recruit managers and professionals will inform possible human capital impediments to innovation. Information on access to credit needed for business formation and development will allow for assessing financing impediments to innovation. Information on the availability of broadband Internet service and how this capability affects business strategy will allow assessing infrastructure impediments to innovation. Information on interaction with suppliers, customers, competitors, business associations and other local institutions providing real services to the establishment will inform the importance of regional clusters to innovation.

The survey will collect data from about 30,000 business establishments in tradable sectors that will include mining, manufacturing, wholesale trade, transportation and warehousing, information, finance and insurance, professional/scientific/technical services, arts, and management of businesses. Only businesses with 5 or more employees will be included in the sample. While the focus of the survey will be on establishments in nonmetropolitan counties,

establishments from metropolitan counties will be sampled in adequate numbers to allow comparative analysis. Businesses will be selected at random from strata defined by establishment size categories, industry and metropolitan or nonmetropolitan status of the county. The sample will be selected from the business establishment list maintained by state employment security departments where state approval is granted, and from a proprietary business establishment list frame for those states where approval is not granted. The much more comprehensive coverage of new and small establishments available in state administrative data provides a compelling argument for this hybrid sample frame approach, as these establishments are critical to examining processes of entrepreneurship and innovation.

The interview protocol will include a screening interview to identify the most knowledgeable person in the establishment to respond to questions regarding innovative activities of the entity. Screening greatly improves the quality and effectiveness of the contact information. The most appropriate phone number, e-mail address and mailing address will be collected at this time to allow efficient distribution of a multi-modal survey instrument to the most appropriate respondent for the business. Respondents will have the flexibility to respond to a Web questionnaire, a mail questionnaire, or a telephone survey based on their personal preference. This protocol will reduce respondent burden by using the survey mode which is most efficient for a given respondent. Past research has demonstrated that multi-modal surveys also increase survey response rates. A limited number of control surveys will be used to assess any mode bias.

Social exchange theory will also be invoked as this is seen as integral to the tailored design methodology (Dillman *et al.,* 2009) that will be employed in this study to increase response rate. In addition to offering mixed survey modes, the design will integrate multiple and mutually supportive ways to appeal to the diversity of respondents in this business population. The following are some examples of these design elements:

- The survey request will be distinguishable from other surveys and will emphasize how the information will be used and describe the benefits back to the population for responding to the survey.
- Survey appeals in contacts will show positive regard and call on the norms of social responsibility by asking for respondents' help and advice, as some respondents feel rewarded when they know they have helped others.
- Survey contacts will be personally addressed, toll free numbers will be provided for answering questions and providing help. Confidentiality of responses will be ensured and respondents will know how to contact the surveyor if they have questions on security or other issues.
- All contacts will be personalized and will emphasize why the study is important and express appreciation for respondents' help. They will be formally thanked for promptly completing questionnaires.
- Small tangible token rewards provided in advance and at the time of the survey request will be further tested with small businesses to encourage response. Previous survey research has shown that small cash token incentives provided with the survey significantly increase response rates and do much better than promised rewards or nonmonetary rewards.

A key component of tailored survey design is considering and balancing how features of questions, questionnaires, mailings, interviewing, and the context of the survey will influence trust, cost, and rewards associated with the survey circumstances and respondents.

All study instruments will be kept as simple and respondent-friendly as possible. Responses are voluntary and confidential. Responses will be used to produce statistics and for no other purpose. Data files from the survey will not be released to the public.

Affected Public: Respondents include business establishments with at least 5 employees in both nonmetropolitan and metropolitan counties.

Estimated Number of Respondents

The survey is cross-sectional and will be completed at one point in time. The survey will have a complex mixed survey administration to include telephone screening, pre-notification letter with Web access, multi-contact telephone interviewing, follow-up nonrespondent mail questionnaires, and simultaneous Web questionnaires offered during all contacts. Completion time for each questionnaire, based on comparisons with similar mixed modes is estimated at 30 minutes per completion, including time for reading correspondence, returning an eligibility postcard or responding to a screening call, reviewing instructions, gathering data needed, and responding to questionnaire items. It is also expected that those choosing not to participate will require 10 minutes to review the materials and decide not to participate.

Full Study: The initial sample size for the full study is 30,000 businesses. The expected overall response rate is 80 percent for firms in the main study. The total estimated response burden for all of those participating in the study is 12,000 hours (30,000 respondents × 80 percent response rate × 0.50 hours) and for the non-responding business is 1,000 hours (6,000 respondents × 10 minutes).

Pilot Study: A pilot test of the survey will be done in advance of the full study survey. The purpose of the pilot is to evaluate the survey protocol, and test instruments and questionnaires. The initial sample size for this phase of the research is 4,000 businesses. The expected response rate is 80% of firms. The total estimated response burden for the pilot testing is 1,600 hours (4,000 respondents × 80 percent × 0.5 hours). Non-responding businesses will experience 133 hours of burden (800 respondents × 10 minutes). Total respondent burden is estimated at 14,733 hours (see table below).

Testing will be limited to a maximum of 9 businesses which will be consulted on the questionnaire and asked to complete the questionnaire in a cognitive interview test.

Estimated Respondent Burden for Rural Establishment Innovation Survey

Survey	Sample Size	Freq	Responses				Non-response				Total Burden Hours
			Resp. Count	Freq x Count	Min./ Resp.	Burden Hours	Nonresp Count	Freq. x Count	Min./ Nonr.	Burden Hours	
Pilot Study	4,000	1	3,200	3,200	30	1,600	800	800	10	133	1,733
Full Study	30,000	1	24,000	24,000	30	12,000	6,000	6,000	10	1,000	13,000
Total	34,000					13,600				1,133	14,733

Dated: July 14, 2011.

Katherine R. Smith,

Administrator, Economic Research Service.

[FR Doc. 2011–21848 Filed 8–25–11; 8:45 am]

BILLING CODE 3410–18–P

DEPARTMENT OF AGRICULTURE

Forest Service

Black Hills National Forest, SD; Thunder Basin National Grassland, WY; Teckla-Osage-Rapid City Transmission 230 kV Project

AGENCY: Forest Service, USDA.

ACTION: Notice of intent to prepare an environmental impact statement.

SUMMARY: The Forest Service will prepare an environmental impact statement (EIS) on a proposal by Black Hills Power (BHP) to construct and operate a 230 kilovolt (kV) transmission line between the Teckla and Osage Substations in northeastern Wyoming to the Lange Substation in Rapid City, South Dakota. The Bureau of Land Management (BLM) will be a cooperating agency on this EIS. The Teckla-Osage-Rapid City Transmission 230 kV Project would be approximately 150 miles long. It would cross portions of the Black Hills National Forest and private lands in South Dakota and portions of the Thunder Basin National Grasslands, private lands, BLM lands, and state lands in Wyoming. The line would be constructed on wood or steel H-frame structures for most of its length with possibly some steel monopole structures in the Rapid City area. The structures would be 65 to75 feet tall and the line would require a right-of-way approximately 125 feet wide.

DATES: Comments concerning the scope of the analysis would be most useful if received by 30 days following the date of this notice. The draft environmental impact statement is expected to be available for public review by November 2012 and the final environmental impact statement is expected to be completed by June 2013.

ADDRESSES: Send written comments to Dave Slepnikoff, Project Manager, Black Hills National Forest, 8221 South Highway 16, Rapid City, South Dakota 57702; or Geri Proctor, Thunder Basin National Grasslands, 2250 East Richards Street, Douglas, WY 82633–8922. Send comments via e-mail to *comments-rocky-mountain-black-hills-mystic@fs.fed.us* with ''Teckla–Osage–Rapid City Transmission Project'' as the subject. Electronic comments must be readable in Word, Rich Text or PDF formats.

FOR FURTHER INFORMATION CONTACT: Those with questions or needing additional information should contact Dave Slepnikoff, Team Leader and Project Manager, at the Mystic Ranger District office in Rapid City at (605) 343–1567, or Geri Proctor at the Thunder Basin National Grasslands in Douglas, WY at (307) 358–4690. Individuals who use telecommunication devices for the deaf (TDD) may call the Federal Information Relay Service (FIRS) at 1–800–877–8339 between 8 a.m. and 8 p.m., Eastern Time, Monday through Friday.

SUPPLEMENTARY INFORMATION: The actions proposed are in direct response to an application submitted to the Black Hills National Forest and Thunder Basin National Grassland by Black Hills Power (BHP) to construct and operate a 230 kilovolt (kV) transmission line between the Teckla and Osage Substations in northeast Wyoming and the Lange Substation in Rapid City, South Dakota. The project area covers parts of Campbell and Weston Counties in Wyoming, and Pennington, Meade, and Lawrence Counties in South Dakota.

Purpose and Need for Action

The purpose of the Teckla-Osage-Rapid City Transmission Project is to:

- Strengthen the regional transmission network.
- Improve the reliability of the transmission system.
- Provide additional transmission capacity to help meet the growing demand for electricity and economic development in the region.

Proposed Action

The proposed action is to construct the Teckla-Osage-Rapid City 230 kV transmission line as described below:

- Approximately 135 miles of transmission line.
- Require a 125 foot right-of-way.
- Construction of wood or steel H-frame structures 65–75 feet in height.

This proposal also includes specific actions needed for interim and final reclamation.

Lead and Cooperating Agencies

The Bureau of Land Management will be a cooperating agency on this EIS.

Responsible Officials

Craig Bobzien, Forest Supervisor, Black Hills National Forest, 1019 N. 5th Street, Custer, SD 57730; and Richard A. Cooksey, Deputy Forest Supervisor, Medicine Bow—Routt National Forest and Thunder Basin National Grassland, 2250 East Richards Street, Douglas, WY 82633–8922.

Nature of Decision To Be Made

The Forest Supervisors will decide whether the proposed action will proceed as proposed or as modified by an alternative; which recommended mitigation measures and monitoring requirements will be applied; and whether a Forest Plan Amendment is required.

Preliminary Issues

Anticipated issues include effects of the project on plants and wildlife including sensitive species such as sage grouse, goshawks, and other raptors; archaeological sites; hydrology and water quality; and scenic integrity and visual resources.

Scoping Process

This notice of intent initiates the scoping process, which guides the development of the environmental impact statement. Comments and input regarding the proposal will be received via direct mailing from the public, other groups, and agencies during the initial public comment period through October 28, 2011. Public meetings are scheduled for September 13, 2011 between 4–7 pm at the Hell Canyon Ranger District Office, 1225 Washington Boulevard in Newcastle, WY; and September 20, 2011 between 6–8 pm at the Mystic Ranger District office, 8221 South Highway 16

in Rapid City, SD. Comments submitted based on this NOI will be most useful if received within 30 days from the date of this notice. Response to the draft EIS is expected to be sought from the interested public beginning in November 2012.

It is important that reviewers provide their comments at such times and in such manner that they are useful to the agency's preparation of the environmental impact statement. Therefore, comments should be provided prior to the close of the comment period and should clearly articulate the reviewer's concerns and contentions.

Comments received in response to this solicitation, including names and addresses of those who comment, will be part of the public record for this proposed action. Comments submitted anonymously will be accepted and considered, however.

Dated: August 19, 2011.

Dennis Jaeger,

Deputy Forest Supervisor, Black Hills National Forest.

[FR Doc. 2011–21712 Filed 8–25–11; 8:45 am]

BILLING CODE 3410–11–P

COMMISSION ON CIVIL RIGHTS

Agenda and Notice of Public Meeting of the Nebraska Advisory Committee

Notice is hereby given, pursuant to the provisions of the rules and regulations of the U.S. Commission on Civil Rights (Commission), and the Federal Advisory Committee Act (FACA), that a planning meeting of the Nebraska Advisory Committee to the Commission will convene by conference call at 1:30 p.m. and adjourn at approximately 2:30 p.m. on Thursday, September 15, 2011. The purpose of this meeting is to continue planning the Committee's civil rights project ''The Civil Rights Implications of Nebraska LB 403 to Require Verification of Legal Presence in the United States to Receive Public Benefits.''

This meeting is available to the public through the following toll-free call-in number: (866) 364–7584, conference call access code number 89764874. Any interested member of the public may call this number and listen to the meeting. Callers can expect to incur charges for calls they initiate over wireless lines, and the Commission will not refund any incurred charges. Callers will incur no charge for calls they initiate over land-line connections to the toll-free telephone number. Persons with hearing impairments may also follow the proceedings by first calling the Federal Relay Service at 1–800–977–8339 and providing the Service with the conference call number and contact name Farella E. Robinson.

To ensure that the Commission secures an appropriate number of lines for the public, persons are asked to register by contacting Corrine Sanders of the Central Regional Office and TTY/TDD telephone number, by 4 p.m. on September 8, 2011.

Members of the public are entitled to submit written comments. The comments must be received in the regional office by September 29, 2011. The address is U.S. Commission on Civil Rights, 400 State Avenue, Suite 908, Kansas City, Kansas 66101. Comments may be e-mailed to *frobinson@usccr.gov.* Records generated by this meeting may be inspected and reproduced at the Central Regional Office, as they become available, both before and after the meeting. Persons interested in the work of this advisory committee are advised to go to the Commission's Web site, *http://www.usccr.gov,* or to contact the Central Regional Office at the above e-mail or street address.

The meeting will be conducted pursuant to the provisions of the rules and regulations of the Commission and FACA.

Dated in Washington, DC on August 23, 2011.

Peter Minarik,

Acting Chief, Regional Programs Coordination Unit.

[FR Doc. 2011–21905 Filed 8–25–11; 8:45 am]

BILLING CODE 6335–01–P

COMMISSION ON CIVIL RIGHTS

Agenda and Notice of Public Meeting of the Iowa Advisory Committee

Notice is hereby given, pursuant to the provisions of the rules and regulations of the U.S. Commission on Civil Rights (Commission), and the Federal Advisory Committee Act (FACA), that a State Advisory Committee (SAC) meeting of the Iowa Advisory Committee to the Commission will convene on Wednesday, September 21, 2011 at 1 p.m. and adjourn at approximately 4 p.m. (CST) at the Office of the Iowa Secretary of State, Lucas State Office Building, First Floor Conference Room, 321 East 12th Street, Des Moines, IA 50319. The purpose of the meeting is to continue planning a future civil rights project and to receive briefing on voting rights for the military deployed overseas and proposed legislation that will be considered by the General Assembly in 2012.

Members of the public are entitled to submit written comments. The comments must be received in the regional office by October 6, 2011. The address is U.S. Commission on Civil Rights, 400 State Avenue, Suite 908, Kansas City, Kansas 66101. Persons wishing to e-mail their comments, or to present their comments verbally at the meeting, or who desire additional information should contact Farella E. Robinson, Regional Director, Central Regional Office, at (913) 551–1400, (or for hearing impaired TDD 913–551–1414), or by e-mail to *frobinson@usccr.gov.*

Hearing-impaired persons who will attend the meeting and require the services of a sign language interpreter should contact the Regional Office at least ten (10) working days before the scheduled date of the meeting.

Records generated from this meeting may be inspected and reproduced at the Central Regional Office, as they become available, both before and after the meeting. Persons interested in the work of this advisory committee are advised to go to the Commission's Web site, *http://www.usccr.gov,* or to contact the Central Regional Office at the above e-mail or street address.

The meeting will be conducted pursuant to the provisions of the rules and regulations of the Commission and FACA. Dated in Washington, DC, August 23, 2011.

Peter Minarik,

Acting Chief, Regional Programs Coordination Unit.

[FR Doc. 2011–21907 Filed 8–25–11; 8:45 am]

BILLING CODE 6335–01–P

DEPARTMENT OF COMMERCE

Submission for OMB Review; Comment Request

The Department of Commerce will submit to the Office of Management and Budget (OMB) for clearance the following proposal for collection of information under the provisions of the Paperwork Reduction Act (44 U.S.C. chapter 35).

Agency: National Oceanic and Atmospheric Administration (NOAA).

Title: Large Pelagic Fishing Survey.

OMB Control Number: 0648–0380.

Form Number(s): NA.

Type of Request: Regular submission (revision/extension of a current information collection).

Number of Respondents: 12,434.

Average Hours per Response: Telephone survey, 10 minutes; intercept

survey, 5 minutes; follow-up telephone call, 2 minutes; biological survey, 1 minute; headboat survey, 4 minutes.

Burden Hours: 2,451.

Needs and Uses: This request is for a revision and extension of a current information collection.

The Large Pelagic Fishing Survey consists of dockside and telephone surveys of recreational anglers for large pelagic fish (tunas, sharks, and billfish) in the Atlantic Ocean. The survey provides the National Marine Fisheries Service (NMFS) with information to monitor catch of bluefin tuna, marlin and other federally-managed species. Catch monitoring in these fisheries and collection of catch and effort statistics for all pelagic fish is required under the Atlantic Tunas Convention Act and the Magnuson-Stevens Fishery Conservation and Management Act. The information collected is essential for the United States (U.S.) to meet its reporting obligations to the International Commission for the Conservation of Atlantic Tuna. The revision is due to the elimination of two surveys from the collection.

Affected Public: Individuals or households.

Frequency: Annually.

Respondent's Obligation: Mandatory.

OMB Desk Officer: *OIRA_Submission@omb.eop.gov.*

Copies of the above information collection proposal can be obtained by calling or writing Diana Hynek, Departmental Paperwork Clearance Officer, (202) 482–0266, Department of Commerce, Room 6616, 14th and Constitution Avenue, NW., Washington, DC 20230 (or via the Internet at *dHynek@doc.gov*).

Written comments and recommendations for the proposed information collection should be sent within 30 days of publication of this notice to *OIRA_Submission@omb.eop.gov.*

Dated: August 23, 2011.

Gwellnar Banks,

Management Analyst, Office of the Chief Information Officer.

[FR Doc. 2011–21889 Filed 8–25–11; 8:45 am]

BILLING CODE 3510–22–P

DEPARTMENT OF COMMERCE

Submission for OMB Review; Comment Request

The Department of Commerce will submit to the Office of Management and Budget (OMB) for clearance the following proposal for collection of information under the provisions of the Paperwork Reduction Act (44 U.S.C. chapter 35).

Agency: International Trade Administration (ITA).

Title: Annual Report from Foreign-Trade Zones.

OMB Control Number: 0625–0109.

Form Number(s): ITA–359P.

Type of Request: Regular submission (revision/extension of a currently approved information collection).

Burden Hours: 12,815.

Number of Respondents: 163.

Average Hours per Response: 30 to 190 hours (depending on size and structure of the foreign-trade zone).

Needs and Uses: The Foreign-Trade Zone Annual Report is the vehicle by which Foreign Trade Zone (FTZ) grantees report annually to the Foreign Trade Zones Board, pursuant to the requirements of the Foreign Trade Zones Act (19 U.S.C. 81a–81u). The annual reports submitted by grantees are the only complete source of compiled information on FTZs. The data and information contained in the reports relates to international trade activity in FTZs. The reports are used by the Congress and the Department to determine the economic effect of the FTZ program. The reports are also used by the FTZ Board and other trade policy officials to determine whether zone activity is consistent with U.S. international trade policy, and whether it is in the public interest. The public uses the information regarding FTZs activities to evaluate their effect on industry sectors. The information contained in annual reports also helps zone grantees in their marketing efforts.

Affected Public: State, local, or Tribal governments or not-for-profit institutions.

Frequency: Annually.

Respondent's Obligation: Required to obtain or retain benefits.

OMB Desk Officer: Wendy Liberante, (202) 395–3647.

Copies of the above information collection proposal can be obtained by calling or writing Diana Hynek, Departmental Paperwork Clearance Officer, (202) 482–0266, Department of Commerce, Room 6616, 14th and Constitution Avenue, NW., Washington, DC 20230 (or via the Internet at *dHynek@doc.gov.*

Written comments and recommendations for the proposed information collection should be sent within 30 days of publication of this notice to Wendy Liberante, OMB Desk Officer, Fax number (202) 395–7285 or via the Internet at *Wendy_L._Liberante@omb.eop.gov.*

Dated: August 22, 2011.

Gwellnar Banks,

Management Analyst, Office of the Chief Information Officer.

[FR Doc. 2011–21761 Filed 8–25–11; 8:45 am]

BILLING CODE 3510–DS–P

DEPARTMENT OF COMMERCE

Census Bureau

Proposed Information Collection; Comment Request; Quarterly Survey of Public Pensions

AGENCY: U.S. Census Bureau, Commerce.

ACTION: Notice.

SUMMARY: The Department of Commerce, as part of its continuing effort to reduce paperwork and respondent burden, invites the general public and other Federal agencies to take this opportunity to comment on proposed and/or continuing information collections, as required by the Paperwork Reduction Act of 1995, Public Law 104–13 (44 U.S.C. 3506(c)(2)(A)).

DATES: To ensure consideration, written comments must be submitted on or before October 25, 2011.

ADDRESSES: Direct all written comments to Diana Hynek, Departmental Paperwork Clearance Officer, Department of Commerce, Room 6616, 14th and Constitution Avenue, NW., Washington, DC 20230 (or via the Internet at *dHynek@doc.gov*).

FOR FURTHER INFORMATION CONTACT: Requests for additional information or copies of the information collection instrument(s) and instructions should be directed to Erika Becker-Medina, Chief, Employment and Benefit Statistics Branch, Governments Division, U.S. Census Bureau, Headquarters: 6K141, Washington, DC 20233; telephone: 301–763–1494; facsimile: 301–763–6833; e-mail: *erika.h.becker.medina@census.gov.*

SUPPLEMENTARY INFORMATION:

I. Abstract

The Census Bureau plans to request an extension for the Quarterly Survey of Public Pensions (formerly known as the Finances of Selected Public Employee Retirement Systems). The quarterly survey was initiated by the Census Bureau in 1968 at the request of both the Council of Economic Advisers and the Federal Reserve Board.

The Quarterly Survey of Public Pensions provides national summary data on the revenues, expenditures, and

composition of assets of the largest pension systems of state and local governments. These data are used by the Federal Reserve Board to track the public sector portion of the Flow of Funds Accounts. The Bureau of Economic Analysis uses these data as part of the government sector projections in the Gross Domestic Product. Economists and public policy analysts use the data to assess general economic conditions and state and local government financial activities.

Data are collected from a panel of defined benefit plans of the 100 largest state and local government pension systems as determined by their total cash and security holdings reported in the 2007 Census of Governments. The defined benefit plans of these 100 largest pension systems comprise 89.4 percent of financial activity among such entities, based on the 2007 Census of Governments.

After a census of governments has been taken, it is considered best practice to reselect the 100 largest state and local government pension systems. Starting with the first quarter of 2014, data will reflect the new universe of the 100 largest pension systems, based on the 2012 Census of Governments. A bridge study will be published if there is any change to the universe.

II. Method of Collection

Survey data will be collected via mail-out/mail-back questionnaire which is also available on the Internet. Respondents may choose to mail, fax, or report their data online. Most respondents choose to report their data online. Only six percent of respondents report data via mail or fax. In addition to reporting current quarter data, respondents may report data for the previous two quarters or submit revisions to their previously submitted data.

Usable replies are received each quarter from 85 to 95 percent of the systems canvassed. Imputations are developed for each of the remaining systems in the panel from the latest available data.

III. Data

OMB Control Number: 0607–0143.
Form Number: F–10.
Type of Review: Regular submission.
Affected Public: State and locally-administered public pension plans.
Estimated Number of Respondents: 100.
Estimated Time per Response: 45 minutes.
Estimated Total Annual Burden Hours: 300.
Estimated Total Annual Cost: $6,600.
Respondent's Obligation: Voluntary.
Legal Authority: Title 13 U.S.C. Section 182.

IV. Request for Comments

Comments are invited on: (a) Whether the proposed collection of information is necessary for the proper performance of the functions of the agency, including whether the information shall have practical utility; (b) the accuracy of the agency's estimate of the burden (including hours and cost) of the proposed collection of information; (c) ways to enhance the quality, utility, and clarity of the information to be collected; and (d) ways to minimize the burden of the collection of information on respondents, including through the use of automated collection techniques or other forms of information technology.

Comments submitted in response to this notice will be summarized and/or included in the request for OMB approval of this information collection; they also will become a matter of public record.

Dated: August 23, 2011.

Glenna Mickelson,

Management Analyst, Office of the Chief Information Officer.

[FR Doc. 2011–21875 Filed 8–25–11; 8:45 am]

BILLING CODE 3510–07–P

DEPARTMENT OF COMMERCE

Foreign-Trade Zones Board

[Docket 55–2011]

Foreign-Trade Zone 14—Little Rock, AR; Application for Subzone; Mitsubishi Power Systems Americas, Inc. (Wind Turbine Nacelles and Generating Sets); Fort Smith, AR

An application has been submitted to the Foreign-Trade Zones Board (the Board) by the Arkansas Economic Development Commission, grantee of FTZ 14, requesting special-purpose subzone status for the wind turbine nacelle and generating set manufacturing facility of Mitsubishi Power Systems Americas, Inc. (MPSA) located in Fort Smith, Arkansas. The application was submitted pursuant to the provisions of the Foreign-Trade Zones Act, as amended (19 U.S.C. 81a–81u), and the regulations of the Board (15 CFR part 400). It was formally filed on August 19, 2011.

The MPSA facility (90 acres/approximately 335 employees) is located at 8201 Chad Colley Boulevard in Fort Smith (Sebastian County), Arkansas. The facility, currently under construction, will be used to manufacture and distribute wind turbine nacelles, generating sets and related components (up to 250 nacelles, 250 generating sets, and 750 nacelle components (front and rear modules, rotor heads) annually) for the U.S. market and export. Foreign components and materials (representing up to 56% of the finished products' value) that would be used in the manufacturing activity would include: grease, oils, epoxy/resins, paint, filler, sealants, electrical tape, adhesives, plastic tubes/pipes, self-adhesive plates/sheets/film of plastics, gaskets/washers/seals of plastics and rubber, articles of plastic and rubber, wire and cable, fasteners (of steel, copper, aluminum), tubes/pipes and related fittings of steel and copper, brackets, flanges, base metal mountings, chain, guide bars, hinges, linear/rotary action cylinders, electrical equipment, connectors, panels, displays, motors, generators, batteries, profile projectors and parts, ducts, clamps, control valves, gears, transmission shafts, flywheels, clutches, couplings, pulleys, springs, pumps, fans, compressors, air/water coolers, evaporators, heat exchangers, filters, balancing weights, plates, controllers, hydraulic assemblies, accumulators, valves, bearings, housings, lighting equipment, windings, electronic components, thermometers, hydrometers, gauges, measuring instruments, heaters, thermostats, regulators, switches, lamps, clock movements, and discharge brushes (duty rate range: free—9.0%; 45¢ ea.+6.4%+25¢/jewel).

FTZ procedures could exempt MPSA from customs duty payments on the foreign components and materials used in export production (as much as 25% of annual shipments). On domestic shipments, the company would be able to elect the duty rate that applies to finished wind turbine nacelles, generating sets, and nacelle components (duty rate range: free—3.0%) for the foreign production inputs noted above. MPSA would also be exempt from duty payments on any foreign-origin inputs that become scrap or waste during manufacturing. Subzone status would further allow MPSA to realize logistical benefits through the use of weekly customs entry procedures. The application indicates that the savings from FTZ procedures would help improve the facility's international competitiveness.

In accordance with the Board's regulations, Pierre Duy of the FTZ Staff is designated examiner to evaluate and analyze the facts and information presented in the application and case record and to report findings and recommendations to the Board.

Public comment is invited from interested parties. Submissions (original and 3 copies) shall be addressed to the Board's Executive Secretary at the following address: Office of the Executive Secretary, Room 2111, U.S. Department of Commerce, 1401 Constitution Avenue, NW., Washington, DC 20230–0002. The closing period for receipt of comments is October 25, 2011. Rebuttal comments in response to material submitted during the foregoing period may be submitted during the subsequent 15-day period to November 9, 2011.

A copy of the application will be available for public inspection at the Office of the Foreign-Trade Zones Board's Executive Secretary at the address listed above and in the ''Reading Room'' section of the Board's Web site, which is accessible via *http://www.trade.gov/ftz.* For further information, contact Pierre Duy at *Pierre.Duy@trade.gov* or (202) 482–1378.

Dated: August 19, 2011.

Andrew McGilvray,

Executive Secretary.

[FR Doc. 2011–21941 Filed 8–25–11; 8:45 am]

BILLING CODE P

DEPARTMENT OF COMMERCE

International Trade Administration

Initiation of Antidumping and Countervailing Duty Administrative Reviews and Requests for Revocation in Part

AGENCY: Import Administration, International Trade Administration, Department of Commerce.

SUMMARY: The Department of Commerce (''the Department'') has received requests to conduct administrative reviews of various antidumping and countervailing duty orders and findings with July anniversary dates. In accordance with the Department's regulations, we are initiating those administrative reviews. The Department also received requests to revoke two antidumping duty orders in part.

DATES: *Effective Date:* August 26, 2011.

FOR FURTHER INFORMATION CONTACT: Sheila E. Forbes, Office of AD/CVD Operations, Customs Unit, Import Administration, International Trade Administration, U.S. Department of Commerce, 14th Street and Constitution Avenue, NW., Washington, DC 20230, telephone: (202) 482–4697.

SUPPLEMENTARY INFORMATION:

Background

The Department has received timely requests, in accordance with 19 CFR 351.213(b), for administrative reviews of various antidumping and countervailing duty orders and findings with July anniversary dates. The Department also received timely requests to revoke in part the antidumping duty orders on Certain Pasta from Italy for one exporter and on Stainless Steel Sheet and Strip in Coils from Taiwan for one exporter.

All deadlines for the submission of various types of information, certifications, or comments or actions by the Department discussed below refer to the number of calendar days from the applicable starting time.

Notice of No Sales

If a producer or exporter named in this notice of initiation had no exports, sales, or entries during the period of review (''POR''), it must notify the Department within 60 days of publication of this notice in the **Federal Register**. All submissions must be filed electronically at *http://iaaccess.trade.gov* in accordance with 19 CFR 351.303. *See Antidumping and Countervailing Duty Proceedings: Electronic Filing Procedures; Administrative Protective Order Procedures,* 76 FR 39263 (July 6, 2011). Such submissions are subject to verification in accordance with section 782(i) of the Tariff Act of 1930, as amended (''Act''). Further, in accordance with 19 CFR 351.303(f)(3)(ii), a copy of each request must be served on the petitioner and each exporter or producer specified in the request.

Respondent Selection

In the event the Department limits the number of respondents for individual examination for administrative reviews, the Department intends to select respondents based on U.S. Customs and Border Protection (''CBP'') data for U.S. imports during the POR. We intend to release the CBP data under Administrative Protective Order (''APO'') to all parties having an APO within seven days of publication of this initiation notice and to make our decision regarding respondent selection within 21 days of publication of this **Federal Register** notice. The Department invites comments regarding the CBP data and respondent selection within five days of placement of the CBP data on the record of the applicable review.

In the event the Department decides it is necessary to limit individual examination of respondents and conduct respondent selection under section 777A(c)(2) of the Act:

In general, the Department has found that determinations concerning whether particular companies should be ''collapsed'' (*i.e.,* treated as a single entity for purposes of calculating antidumping duty rates) require a substantial amount of detailed information and analysis, which often require follow-up questions and analysis. Accordingly, the Department will not conduct collapsing analyses at the respondent selection phase of this review and will not collapse companies at the respondent selection phase unless there has been a determination to collapse certain companies in a previous segment of this antidumping proceeding (*i.e.,* investigation, administrative review, new shipper review or changed circumstances review). For any company subject to this review, if the Department determined, or continued to treat, that company as collapsed with others, the Department will assume that such companies continue to operate in the same manner and will collapse them for respondent selection purposes. Otherwise, the Department will not-collapse companies for purposes of respondent selection. Parties are requested to (a) identify which companies subject to review previously were collapsed, and (b) provide a citation to the proceeding in which they were collapsed. Further, if companies are requested to complete the Quantity and Value Questionnaire for purposes of respondent selection, in general each company must report volume and value data separately for itself. Parties should not include data for any other party, even if they believe they should be treated as a single entity with that other party. If a company was collapsed with another company or companies in the most recently completed segment of this proceeding where the Department considered collapsing that entity, complete quantity and value data for that collapsed entity must be submitted.

Deadline for Withdrawal of Request for Administrative Review

Pursuant to 19 CFR 351.213(d)(1), a party that has requested a review may withdraw that request within 90 days of the date of publication of the notice of initiation of the requested review. The regulation provides that the Department may extend this time if it is reasonable to do so. In order to provide parties additional certainty with respect to when the Department will exercise its discretion to extend this 90-day deadline, interested parties are advised that, with regard to reviews requested

on the basis of anniversary months on or after August 2011, the Department does not intend to extend the 90-day deadline unless the requestor demonstrates that an extraordinary circumstance has prevented it from submitting a timely withdrawal request. Determinations by the Department to extend the 90-day deadline will be made on a case-by-case basis.

Separate Rates

In proceedings involving non-market economy (''NME'') countries, the Department begins with a rebuttable presumption that all companies within the country are subject to government control and, thus, should be assigned a single antidumping duty deposit rate. It is the Department's policy to assign all exporters of merchandise subject to an administrative review in an NME country this single rate unless an exporter can demonstrate that it is sufficiently independent so as to be entitled to a separate rate.

To establish whether a firm is sufficiently independent from government control of its export activities to be entitled to a separate rate, the Department analyzes each entity exporting the subject merchandise under a test arising from the *Final Determination of Sales at Less Than Fair Value: Sparklers from the People's Republic of China,* 56 FR 20588 (May 6, 1991), as amplified by *Final Determination of Sales at Less Than Fair Value: Silicon Carbide from the People's Republic of China,* 59 FR 22585 (May 2, 1994). In accordance with the separate-rates criteria, the Department assigns separate rates to companies in NME cases only if respondents can demonstrate the absence of both *de jure* and *de facto* government control over export activities.

All firms listed below that wish to qualify for separate-rate status in the administrative reviews involving NME countries must complete, as appropriate, either a separate-rate application or certification, as described below. For these administrative reviews, in order to demonstrate separate-rate eligibility, the Department requires entities for whom a review was requested, that were assigned a separate rate in the most recent segment of this proceeding in which they participated, to certify that they continue to meet the criteria for obtaining a separate rate. The Separate Rate Certification form will be available on the Department's Web site at *http://www.trade.gov/ia* on the date of publication of this **Federal Register** notice. In responding to the certification, please follow the ''Instructions for Filing the Certification'' in the Separate Rate Certification. Separate Rate Certifications are due to the Department no later than 60 calendar days after publication of this **Federal Register** notice. The deadline and requirement for submitting a Certification applies equally to NME-owned firms, wholly foreign-owned firms, and foreign sellers who purchase and export subject merchandise to the United States.

Entities that currently do not have a separate rate from a completed segment of the proceeding [1] should timely file a Separate Rate Application to demonstrate eligibility for a separate rate in this proceeding. In addition, companies that received a separate rate in a completed segment of the proceeding that have subsequently made changes, including, but not limited to, changes to corporate structure, acquisitions of new companies or facilities, or changes to their official company name,[2] should timely file a Separate Rate Application to demonstrate eligibility for a separate rate in this proceeding. The Separate Rate Status Application will be available on the Department's Web site at *http://www.trade.gov/ia* on the date of publication of this **Federal Register** notice. In responding to the Separate Rate Status Application, refer to the instructions contained in the application. Separate Rate Status Applications are due to the Department no later than 60 calendar days of publication of this **Federal Register** notice. The deadline and requirement for submitting a Separate Rate Status Application applies equally to NME-owned firms, wholly foreign-owned firms, and foreign sellers that purchase and export subject merchandise to the United States.

For exporters and producers who submit a separate-rate status application or certification and subsequently are selected as mandatory respondents, these exporters and producers will no longer be eligible for separate-rate status unless they respond to all parts of the questionnaire as mandatory respondents.

Initiation of Reviews

In accordance with 19 CFR 351.221(c)(1)(i), we are initiating administrative reviews of the following antidumping and countervailing duty orders and findings. We intend to issue the final results of these reviews not later than July 31, 2012.

	Period to be reviewed
Antidumping Duty Proceedings	
Finland: Purified Carboxymethylcellulose, A–405–803	7/1/10–6/30/11
CP Kelco Oy	
India: Polyethylene Terephthalate (PET) Film, A–533–824	7/1/10–6/30/11
Ester Industries Limited	
Garware Polyester Ltd.	
Jindal Poly Films Limited of India	
Polypacks Industries	
Polyplex Corporation Ltd.	
SRF Limited	
Vacmet India Ltd.	
Italy: Certain Pasta, A–475–818	7/1/10–6/30/11

[1] Such entities include entities that have not participated in the proceeding, entities that were preliminarily granted a separate rate in any currently incomplete segment of the proceeding (*e.g.,* an ongoing administrative review, new shipper review, *etc.*) and entities that lost their separate rate in the most recently complete segment of the proceeding in which they participated.

[2] Only changes to the official company name, rather than trade names, need to be addressed via a Separate Rate Application. Information regarding new trade names may be submitted via a Separate Rate Certification.

	Period to be reviewed
Botticelli Mediterraneo S.a.r.l.2	
Fiamma Vesuviana S.r.L.	
Industria Alimentare Filiberto Bianconi 1947 S.p.A.	
Labor S.r.L.	
PAM. S.p.A. and its affiliate, Liguori Pastificio dal 1820 SpA	
P.A.P. SNC Di Pazienza G.B. & C.	
Premiato Pastificio Afeltra S.r.L.	
Pasta Lensi S.r.l.	
Pastaficio Zaffiri	
Pastificio Attilio Mastromauro-Pasta Granoro S.R.L.[3]	
Pastificio Di Martino Gaetano & F.lli SpA	
Pastificio Fratelli Cellino, S.r.l.	
Pastificio Lucio Garofalo S.p.A.	
Pastificio Riscossa F.lli Mastromauro S.p.A.	
Rummo S.p.A. Molino e Pastificio	
Rustichella d'Abruzzo S.p.A.	
Russian Federation: Solid Urea, A–821–801	7/1/10–6/30/11
OJSC MCC EuroChem, and production affiliates, OJSC Nevinnomyssky Azot and OJSC Novomoskovskaya Azot	
Taiwan: Polyethylene Terephthalate Film, Sheet, and Strip, A–583–837	7/1/10–6/30/11
Nan Ya Plastics Corporation, Ltd.	
Shinkong Materials Technology Co., Ltd.	
Shinkong Synthetic Fibers Corporation	
The Netherlands: Purified Carboxymethylcellulose, A–421–811	7/1/10–6/30/11
Akzo Nobel Functional Chemicals, B.V.	
CP Kelco B.V.	
The People's Republic of China:	
Certain Oil Country Tubular Goods[4] A–570–943	5/19/10–4/30/11
Certain Polyester Staple Fiber, A–570–905	6/1/10–5/31/11
Jiaxing Fuda Chemical Fibre Factory[5]	
Certain Steel Grating,[6] A–570–947	1/6/10–6/30/11
Ningbo Haitian International Co., Ltd.	
Shanghai Minmetals Materials & Products Co., Ltd.	
Yantai Xinke Steel Structure Co., Ltd.	
Sinosteel Yantai Steel Grating Co., Ltd.	
Ningbo Jiulong Machinery Manufacturing Co., Ltd.	
Accurate Screen, Ltd.	
Wuxi Juhua Import/Export Co., Ltd.	
Well Forge Industries	
Circular Welded Carbon Quality Steel Pipe,[7] A–570–910	7/1/10–6/30/11
Adler Steel Ltd.	
Al Jazeera Steel Products Co SAOG	
Baoshan Iron & Steel Co., Ltd.	
Benxi Northern Steel Pipes, Co. Ltd.	
CNOOC Kingland Pipeline Co., Ltd.	
ETCO (China) International Trading Co., Ltd.	
Great River Trading International Co.	
Guangzhou Juyi Steel Pipes Co., Ltd.	
Hebei Zhongyuan Steel Pipe Manufacturer	
Hefei Zijin Steel Tube Manufacturing Co., Ltd.	
Huludao City Steel Pipe Industrial	
Hunan Great Steel Pipe Co., Ltd.	
Hunan Hengyang Steel Tube (Group) Co., Ltd.	
Jiangsu Changbao Steel Tube Co., Ltd.	
Jiangsu Yulong Steel Pipe Co., Ltd.	
Liaoning Northern Steel Pipe Co., Ltd.	
Shanghai Zhongyou Tipo Steel	
Shanghai Zhongyou TIPO Steel Pipe Co., Ltd.	
Sichuan YNJ Industries Co., Ltd.	
SteelFORCE Far East Ltd.	
Tianjin Baolai International Trade Co., Ltd.	
Tianjin Huilitong Steel Tube Co., Ltd.	
Tianjin Longshenghua Import & Export	
Tianjin Shuangjie Steel Pipe Co., Ltd.	
Tianjin Uniglory International Trade Co., Ltd.	
Weifang East Steel Pipe Co., Ltd.	
Wuxi Fastube Industry Co., Ltd.	
Zhejiang Kingland Pipeline Industry Co., Ltd.	
Zhuji Tri-Union Import & Export Co., Ltd.	
Saccharin,[8] A–570–878	7/1/10–6/30/11

	Period to be reviewed
Pingdingshan Coal Group Kaifeng Xinghua Fine Chemical Plant	
Tianjin Changjie Chemical Co., Ltd.	
Tianjin North Food Co., Ltd.	
Hangzhou Embaiking Pharmaceutical Corp. Ltd.	
Kingchem LLC	
Escalade Ltd./Escalade Israel Ltd.	
The High Trans Corporation	
The Seicheng Chemical Company (''Seicheng'') (a.k.a. Sei-Cheng)	
Yuan Shan Co. Ltd.	
Sin-Ho Trading Co. Ltd. (''Sin-Ho'') (a.k.a. Xin He)	
Long Hwang Chemicals Co. Ltd. (''Long Hwang'') (a.k.a. Lung Huang Trading)	
Sun Disc Company, Ltd.	
Turkey: Certain Pasta, A–489–805	7/1/10–6/30/11
TAT Makarnacilik Sanayi ve Ticaret A.S.	
Marsan Gida Sanayi ve Ticaret A.S., and its affiliates:	
Birlik Pazarlama Sanayi ve Ticaret A.S.	
Bellini Gida Sanayi A.S.	
Marsa Yag Sanayi ve Ticaret A.S.	
Countervailing Duty Proceedings	
India: Polyethylene Terephthalate (PET) Film, C–533–825	1/1/10–12/31/10
Ester Industries Limited	
Garware Polyester Ltd.	
Polyplex Corporation Ltd.	
Jindal Poly Films Limited of India	
SRF Limited	
Vacmet India Limited	
Polypacks Industries of India	
Italy: Certain Pasta, C–475–819	1/1/10–12/31/10
Industria Alimentare Filiberto Bianconi 1947 S.p.A.	
Molino e Pastificio Tomasello, S.p.A.	
The People's Republic of China: Circular Welded Carbon Quality Steel Pipe, C–570–911	1/1/10–12/31/10
Baoshan Iron & Steel Co., Ltd.	
Benxi Northern Steel Pipes, Co. Ltd.	
CNOOC Kingland Pipeline Co., Ltd.	
Guangzhou Juyi Steel Pipe Co., Ltd.	
Hebei Zhongyuan Steel Pipe Manufacturer	
Hefei Zijin Steel Tube Manufacturing Co., Ltd.	
Huludao City Steel Pipe Industrial	
Hunan Great Steel Pipe Co., Ltd.	
Hunan Hengyang Steel Tube (Group) Co., Ltd.	
Jiangsu Changbao Steel Tube Co., Ltd.	
Jiangsu Yulong Steel Pipe Co., Ltd.	
Liaoning Northern Steel Pipe Co., Ltd.	
Liaoyang Steel Tube Co., Ltd.	
Shanghai Zhongyou Tipo Steel	
Tianjin Huilitong Steel Tube Co., Ltd.	
Tianjin Shuangjie Steel Pipe Co., Ltd.	
Weifang East Steel Pipe Co., Ltd.	
Wuxi Fastube Industry Co., Ltd.	
Zhejiang Kingland Pipeline Industry Co., Ltd.	
Turkey: Certain Pasta, C–489–806	1/1/10–12/31/10
Marsan Gida Sanayi ve Ticaret A.S., and its affiliates:	
Birlik Pazarlama Sanayi ve Ticaret A.S.	
Bellini Gida Sanayi A.S.	
Marsa Yag Sanayi ve Ticaret A.S.	
Suspension Agreements	
Russian Federation: Certain Hot-Rolled Carbon Steel Flat Products, A–821–809	7/1/10–6/30/11

During any administrative review covering all or part of a period falling between the first and second or third and fourth anniversary of the publication of an antidumping duty order under 19 CFR 351.211 or a determination under 19 CFR 351.218(f)(4) to continue an order or suspended investigation (after sunset

[3] On August 31, 2010, the Department deferred the 7/1/2009—6/30/2010 administrative review for Pastificio Attilio Mastromauro-Pasta Granoro S.R.L. for one year (75 FR 53274). We are now initiating this review one year later along with the 7/1/2010—6/30/2011 administrative review.

[4] In the initiation notice that was published on June 28, 2011 (76 FR 37781), the POR for the above referenced case was incorrect. The period listed above is the correct POR for this case.

[5] The company listed was inadvertently omitted from the initiation notice that was published on July 28, 2011 (76 FR 45227).

review), the Secretary, if requested by a domestic interested party within 30 days of the date of publication of the notice of initiation of the review, will determine, consistent with *FAG Italia S.p.A.* v. *United States,* 291 F.3d 806 (Fed. Cir. 2002), as appropriate, whether antidumping duties have been absorbed by an exporter or producer subject to the review if the subject merchandise is sold in the United States through an importer that is affiliated with such exporter or producer. The request must include the name(s) of the exporter or producer for which the inquiry is requested.

For the first administrative review of any order, there will be no assessment of antidumping or countervailing duties on entries of subject merchandise entered, or withdrawn from warehouse, for consumption during the relevant provisional-measures ''gap'' period, of the order, if such a gap period is applicable to the POR.

Interested parties must submit applications for disclosure under administrative protective orders in accordance with 19 CFR 351.305. On January 22, 2008, the Department published *Antidumping and Countervailing Duty Proceedings: Documents Submission Procedures; APO Procedures,* 73 FR 3634 (January 22, 2008). Those procedures apply to administrative reviews included in this notice of initiation. Parties wishing to participate in any of these administrative reviews should ensure that they meet the requirements of these procedures (*e.g.,* the filing of separate letters of appearance as discussed at 19 CFR 351.103(d)).

Any party submitting factual information in an antidumping duty or countervailing duty proceeding must certify to the accuracy and completeness of that information. *See* section 782(b) of the Act. Parties are hereby reminded that revised certification requirements are in effect for company/government officials as well as their representatives in all segments of any antidumping duty or countervailing duty proceedings initiated on or after March 14, 2011. *See Certification of Factual Information to Import Administration During Antidumping and Countervailing Duty Proceedings: Interim Final Rule,* 76 FR 7491 (February 10, 2011) *(''Interim Final Rule'')*, amending 19 CFR 351.303(g)(1) and (2). The formats for the revised certifications are provided at the end of the *Interim Final Rule.* The Department intends to reject factual submissions in any proceeding segments initiated on or after March 14, 2011 if the submitting party does not comply with the revised certification requirements.

These initiations and this notice are in accordance with section 751(a) of the Act (19 U.S.C. 1675(a)), and 19 CFR 351.221(c)(1)(i).

Dated: August 19, 2011.

Christian Marsh,

Deputy Assistant Secretary for Antidumping and Countervailing Duty Operations.

[FR Doc. 2011–21948 Filed 8–25–11; 8:45 am]

BILLING CODE 3510–DS–P

[6] If one of the above named companies does not qualify for a separate rate, all other exporters of Certain Steel Grating from the People's Republic of China (''PRC'') who have not qualified for a separate rate are deemed to be covered by this review as part of the single PRC entity of which the named exporters are a part.

[7] If one of the above named companies does not qualify for a separate rate, all other exporters of Circular Welded Carbon Quality Steel Pipe from the PRC who have not qualified for a separate rate are deemed to be covered by this review as part of the single PRC entity of which the named exporters are a part.

[8] If one of the above named companies does not qualify for a separate rate, all other exporters of Saccharin from the PRC who have not qualified for a separate rate are deemed to be covered by this review as part of the single PRC entity of which the named exporters are a part.

DEPARTMENT OF COMMERCE

International Trade Administration

[A–570–832]

Pure Magnesium From the People's Republic of China: Rescission of Antidumping Duty Administrative Review

AGENCY: Import Administration, International Trade Administration, Department of Commerce.

DATES: August 26, 2011.

SUMMARY: On June 28, 2011, the U.S. Department of Commerce (''the Department'') published a notice of initiation of an administrative review of the antidumping duty order on pure magnesium from the People's Republic of China (''PRC'').[1] The review covers one manufacturer/exporter of subject merchandise from the PRC, Tianjin Magnesium International Co., Ltd. (''TMI''). The period of review (''POR'') is May 1, 2010 through April 30, 2011. Following the receipt of a certification of no shipments from TMI, we notified all interested parties of the Department's intent to rescind this review and provided an opportunity to comment on the rescission.[2] We received no comments. Therefore, we are rescinding this administrative review.

FOR FURTHER INFORMATION CONTACT: Laurel LaCivita, AD/CVD Operations, Office 8, Import Administration, International Trade Administration, U.S. Department of Commerce, 14th Street and Constitution Avenue, NW., Washington, DC 20230; telephone: (202) 482–4243.

SUPPLEMENTARY INFORMATION:

Background

On May 2, 2011, the Department published a notice of opportunity to request an administrative review of the antidumping duty order on pure magnesium from the PRC for the period May 1, 2010 through April 30, 2011.[3] On May 31, 2011, U.S. Magnesium LLC (''U.S. Magnesium''), a domestic producer and Petitioner in the underlying investigation of this case, made a timely request that the Department conduct an administrative review of TMI and a number of other companies.[4] On June 9, 2011, the Department requested Petitioner to clarify its request for review, by identifying the exporters of the subject merchandise.[5] On June 13, 2011, Petitioner withdrew its request for review for all companies except TMI.[6] On June 29, 2011, in accordance with section 751(a) of the Tariff Act of 1930, as amended (''the Act''), the Department published in the **Federal Register** a notice of initiation of this antidumping duty administrative review.[7] On June 30, 2011, TMI submitted a letter to the Department certifying that it did not export pure magnesium for consumption in the United States during the POR.[8]

On July 6, 2011, the Department placed on the record information obtained in response to the

[1] *See Initiation of Antidumping and Countervailing Duty Administrative Reviews and Request for Revocation in Part*, 76 FR 37781 (June 28, 2011) (*''Initiation''*).

[2] *See* Memorandum to the File, ''Pure Magnesium from the People's Republic of China: Intent to Rescind the 2010–2011 Antidumping Duty Administrative Review of Pure Magnesium from the People's Republic of China—A–570–832,'' dated July 22, 2011 (''Intent to Rescind Memorandum'').

[3] *See Antidumping or Countervailing Duty Order, Finding, or Suspended Investigation; Opportunity To Request Administrative Review*, 76 FR 24458 (May 2, 2011).

[4] *See* letter from U.S. Magnesium, ''Pure Magnesium from the People's Republic of China: Request for Administrative Reviews,'' dated May 31, 2011.

[5] *See* Memorandum to the File, ''Pure Magnesium from the People's Republic of China: Clarification With Respect to Petitioner's Request for Review in the 2010–2011 Review,'' dated June 9, 2011.

[6] *See* letter from U.S. Magnesium, ''Pure Magnesium from the People's Republic of China: Partial Withdrawal of Request for Administrative Review,'' dated June 13, 2011.

[7] *See Initiation*, 76 FR at 37785.

[8] *See* letter from TMI, ''Pure Magnesium from the People's Republic of China; A–570–832; Certification of No Sales by Tianjin Magnesium International Co., Ltd.,'' dated June 30, 2011.

Department's query to U.S. Customs and Border Protection ("CBP") concerning imports into the United States of subject merchandise during the POR.[9] These data indicate that TMI made no entries of subject merchandise during the POR.[10] In addition, on July 11, 2011, we notified Customs that we were in receipt of a no-shipment certification from TMI and requested CBP to report any contrary information within 10 days.[11] CBP did not report any contrary information.

On July 22, 2011, the Department notified interested parties of its intent to rescind this administrative review and gave parties until August 5, 2011, to provide comments. We did not receive any comments.

Scope of the Order

Merchandise covered by the order is pure magnesium regardless of chemistry, form or size, unless expressly excluded from the scope of the order. Pure magnesium is a metal or alloy containing by weight primarily the element magnesium and produced by decomposing raw materials into magnesium metal. Pure primary magnesium is used primarily as a chemical in the aluminum alloying, desulfurization, and chemical reduction industries. In addition, pure magnesium is used as an input in producing magnesium alloy. Pure magnesium encompasses products (including, but not limited to, butt ends, stubs, crowns and crystals) with the following primary magnesium contents:

(1) Products that contain at least 99.95% primary magnesium, by weight (generally referred to as "ultra pure" magnesium);

(2) Products that contain less than 99.95% but not less than 99.8% primary magnesium, by weight (generally referred to as "pure" magnesium); and

(3) Products that contain 50% or greater, but less than 99.8% primary magnesium, by weight, and that do not conform to ASTM specifications for alloy magnesium (generally referred to as "off-specification pure" magnesium).

"Off-specification pure" magnesium is pure primary magnesium containing magnesium scrap, secondary magnesium, oxidized magnesium or impurities (whether or not intentionally added) that cause the primary magnesium content to fall below 99.8% by weight. It generally does not contain, individually or in combination, 1.5% or more, by weight, of the following alloying elements: aluminum, manganese, zinc, silicon, thorium, zirconium and rare earths.

Excluded from the scope of the order are alloy primary magnesium (that meets specifications for alloy magnesium), primary magnesium anodes, granular primary magnesium (including turnings, chips and powder) having a maximum physical dimension (*i.e.*, length or diameter) of one inch or less, secondary magnesium (which has pure primary magnesium content of less than 50% by weight), and remelted magnesium whose pure primary magnesium content is less than 50% by weight.

Pure magnesium products covered by the order are currently classifiable under Harmonized Tariff Schedule of the United States ("HTSUS") subheadings 8104.11.00, 8104.19.00, 8104.20.00, 8104.30.00, 8104.90.00, 3824.90.11, 3824.90.19 and 9817.00.90. Although the HTSUS subheadings are provided for convenience and customs purposes, our written description of the scope is dispositive.

Rescission of the Administrative Review

Based upon the certifications and the evidence on the record, the Department finds TMI's claim of no shipments of subject merchandise to the United States during the POR to be substantiated. Pursuant to 19 CFR 351.213(d)(3), the Department may rescind an administrative review, in whole or with respect to a particular exporter or producer, if the Department concludes that, during the period covered by the review, there were no entries, exports, or sales of the subject merchandise. Because there were no entries, exports, or sales of the subject merchandise during the POR, the Department is rescinding this review in accordance with 19 CFR 351.213(d)(3). The Department intends to instruct CBP fifteen days after the publication of this notice to liquidate such entries. Antidumping duties shall be assessed at rates equal to the cash deposit of estimated antidumping duties required at the time of entry, or withdrawal from warehouse, for consumption, in accordance with 19 CFR 351.212(c)(2).

We are issuing and publishing this notice in accordance with sections 751(a)(1) and 777(i) of the Act and 19 CFR 351.213(d)(4).

Dated: August 16, 2011.

Christian Marsh,

Acting Deputy Assistant Secretary for Import Administration.

[FR Doc. 2011–21675 Filed 8–25–11; 8:45 am]

BILLING CODE 3510–DS–P

[9] *See* Memorandum to the File, "Pure Magnesium from the People's Republic of China; Transmittal of U.S. Customs and Border Protection Information to the File," dated July 6, 2011, at Attachment I.

[10] *Id.*

[11] *See* CBP message number 1192302, "No Shipments Inquiry Re: Pure Magnesium From The People's Republic Of China (A–570–8326)," dated July 11, 2011.

DEPARTMENT OF COMMERCE

International Trade Administration

[A–570–890]

Wooden Bedroom Furniture From the People's Republic of China: Corrected Notice of Court Decision Not in Harmony With the Final Determination of Sales at Less Than Fair Value and Notice of Amended Final Determination of Sales at Less Than Fair Value and Antidumping Duty Order Pursuant to Court Decision

AGENCY: Import Administration, International Trade Administration, Department of Commerce.

SUMMARY: On August 3, 2011, the United States Court of International Trade ("CIT" or the "Court") sustained the Department's remand redetermination[1] pursuant to Court remands[2] of the *Final Determination*[3] of the less than fair value investigation of wooden bedroom furniture ("WBF") from the People's Republic of China ("PRC").[4]

Consistent with the decision of the Court of Appeals for the Federal Circuit ("CAFC" or "Federal Circuit") in *Timken Co.* v. *United States,* 893 F.2d 337 (Fed. Cir. 1990) ("*Timken*"), as clarified by *Diamond Sawblades Mfrs. Coalition* v. *United States,* 626 F.3d 1374 (Fed. Cir. 2010) ("*Diamond Sawblades*"), the Department is notifying the public that the final

[1] *See Final Results of Redetermination Pursuant to Remand,* Consol. Court No. 05–00003, Slip Op. 11–14 (CIT, February 9, 2011) (April 27, 2011) ("*Dorbest V Remand Redetermination*").

[2] *See Dorbest Limited* v. *United States,* Slip Op. 11–14, Consol. Court No. 05–00003 (Feb. 9, 2011) ("*Dorbest V*"); and *Dorbest Ltd.* v. *United States,* 604 F.3d 1363, 1372–73 (Fed. Cir. 2010) ("*Dorbest IV Ruling*") remanded to the Department in *Dorbest Limited* v. *United States,* Consol. Court No. 05–00003, Slip Op. 10–79 (July 21, 2010) ("*Dorbest IV Remand*") (collectively, "*Dorbest IV*").

[3] *Final Determination of Sales at Less Than Fair Value: Wooden Bedroom Furniture From the People's Republic of China,* 69 FR 67313 (November 17, 2004), and accompanying Issues and Decision Memorandum ("IDM"), as amended by *Notice of Amended Final Determination of Sales at Less Than Fair Value and Antidumping Duty Order: Wooden Bedroom Furniture From the People's Republic of China,* 70 FR 329 (January 4, 2005) ("*Amended Final Determination*" and "*Order*") (collectively "*Final Determination*").

[4] *See Dorbest Limited* v. *United States,* Slip Op. 11–95, Consol. Court No. 05–00003 (Aug. 3, 2011) ("*Dorbest VI*").

judgment in this case is not in harmony with the Department's *Final Determination* and is amending its *Final Determination* and *Order.*

The version of this notice released on Tuesday, August 16, 2011, contained three inadvertent errors. In the notice released on Tuesday, August 16, 2011, the Department stated that, subsequent to the *Final Determination,* new cash deposit rates had been established for Dorbest, and indicated that Dorbest's cash deposit rate would not be revised. This statement was incorrect, as the cash deposit rate established for Dorbest in the *Final Determination* has not been revised in subsequent proceedings. Furthermore, the August 16, 2011, notice identified each company for which the cash deposit rates from the *Final Determination* continued to be in effect (*i.e.,* any company that obtained a separate rate in the initial investigation which has not been revised or revoked in any subsequent proceeding). However, the Department inadvertently did not remove from this list the companies whose rates had been altered as a result of the recently published final results of administrative review of the *Order.*[5] Finally, on October 26, 2007, the Department issued the final results of a changed circumstances review wherein it determined that Tradewinds Furniture Ltd., is the successor-in-interest to Nanhai Jiantai Woodwork Co., Ltd.[6] However, the Department inadvertently did not acknowledge this successor-in-interest determination in the list of separate-rate qualifying companies contained in the August 16, 2011, notice. This notice corrects these errors, but makes no other changes to the notice released on August 16, 2011. Because these errors were discovered prior to publication in the **Federal Register**, this amendment is being published in place of the original version released on August 16, 2011.

DATES: *Effective Date:* August 13, 2011.

FOR FURTHER INFORMATION CONTACT: Brendan Quinn, AD/CVD Operations, Office 8, Import Administration, International Trade Administration, U.S. Department of Commerce, 14th Street and Constitution Avenue, NW., Washington, DC 20230; telephone (202) 482–5848.

SUPPLEMENTARY INFORMATION:

Background

On January 5, 2005, the Department published its *Final Determination.* On August 1, 2005, the Department issued its voluntary remand redetermination wherein it modified the surrogate used to value labor.[7] On October 31, 2006, the court remanded the Department's *Final Determination* for further administrative proceedings.[8] On May 25, 2007, the Department issued its final results of redetermination pursuant to *Dorbest I.*[9] In the *Dorbest I Remand Redetermination,* the Department, pursuant to the Court's opinion and order, modified certain aspects of the *Final Determination* as follows: (1) Revised the labor rate for Dorbest; (2) recalculated Dorbest's resin surrogate value; (3) recalculated the mirror surrogate value; (4) revised the selection of surrogate company financial statements, by excluding Evergreen International Ltd. (''Evergreen'') and Jayaraja Furniture (''Jayayraja'') from the surrogate financial ratio calculations; (5) eliminated the spare parts discount adjustment to Dorbest's U.S. price; (6) removed non-scope metal parts form Dorbest's normal value calculation; (7) treated certain of Dorbest's incoming raw materials as direct material costs rather than as a deduction from U.S. prices; and (8) recalculated the separate rate, as appropriate based on the remanded components of the margin calculation challenged by the litigants.

On February 27, 2008, the Court remanded the Department's *Final Determination* for further administrative proceedings.[10] The Court also granted the Department's request for a voluntary remand on the valuation of Dorbest's cardboard.[11] On July 15, 2008, the Department issued its final results of redetermination pursuant to *Dorbest II.*[12] In the *Dorbest II Remand Redetermination,* the Department made the following modifications to its *Final Determination:* (1) Recalculated Dorbest's cardboard surrogate value; (2) revised the selection of surrogate company financial statements by excluding Fusion Design Private Ltd. (''Fusion Design''), DnD's Fine Furniture Pvt., Ltd. (''DnD''), Nizamuddin Furniture Private Ltd. (''Nizamuddin''), and Swaran Furniture Ltd. (''Swaran'') from the surrogate ratio calculations; and (3) recalculated the separate rate pursuant to the Court's instructions. On January 7, 2009, the Court sustained the Department's *Dorbest II Remand Redetermination.*[13]

Dorbest and Petitioners each appealed certain aspects of the CIT's final decision in *Dorbest III* to the Federal Circuit. As a result of this appeal, two issues were remanded to the Department for further administrative proceedings: (1) calculation of the labor wage rate for Dorbest; and (2) the Department's exclusion of four surrogate company financial statements (Fusion Design, DnD, Nizamuddin and Swaran) to derive the financial ratios pursuant to the lower Court's order in *Dorbest II.*[14]

The Federal Circuit held that the Department's methodology for valuing labor, and its regulation (19 CFR 351.408) were inconsistent with the statute because the methodology required the use of data from countries that were not economically comparable to the non market economy, and countries that were not significant producers of subject merchandise. The Federal Circuit invalidated the

[5] *See Wooden Bedroom Furniture from the People's Republic of China: Final Results and Final Rescission in Part,* 76 FR 49729 (August 11, 2011). The companies that were incorrectly included in the August 16, 2011, notice, and have been removed from this notice are as follows: Dalian Huafeng Furniture Co., Ltd.; Dongguan Cambridge Furniture Co., or Glory Oceanic Co., Ltd.; Cheng Meng Furniture (PTE) Ltd., or China Cheng Meng Decoration & Furniture (Suzhou) Co., Ltd.; Dongguan Great Reputation Furniture Co., Ltd.; Dongguan Hero Way Woodwork Co., Ltd., or Dongguan Da Zhong Woodwork Co., Ltd., or Hero Way Enterprises Ltd., or Well Earth International Ltd.; Dongguan Kin Feng Furniture Co., Ltd.; Dongguan Liaobushangdun Huada Furniture Factory, or Great Rich (HK) Enterprise Co. Ltd.; Dongguan Singways Furniture Co., Ltd.; Eurosa (Kunshan) Co., Ltd., or Eurosa Furniture Co., (PTE) Ltd.; Garri Furniture (Dong Guan) Co., Ltd., or Molabile International, Inc., or Weei Geo Enterprise Co., Ltd.; Dongguan Grand Style Furniture, or Hong Kong Da Zhi Furniture Co., Ltd.; Hualing Furniture (China) Co., Ltd., or Tony House Manufacture (China) Co., Ltd., or Buysell Investments Ltd., or Tony House Industries Co., Ltd.; Jardine Enterprise, Ltd.; Nanhai Baiyi Woodwork Co., Ltd.; Season Furniture Manufacturing Co., or Season Industrial Development Co.; Shenyang Shining Dongxing Furniture Co., Ltd. ; Wanhengtong Nueevder (Furniture) Manufacture Co., Ltd., or Dongguan Wanengtong Industry Co., Ltd.; Zhong Shan Fullwin Furniture Co., Ltd.; Zhanjiang Sunwin Arts & Crafts Co., Ltd.; Dongguan Creation Furniture Co., Ltd., or Creation Industries Co., Ltd.; Jiangsu Weifu Group Fullhouse Furniture Manufacturing Corp.; Link Silver Ltd. (V.I.B.), or Forward Win Enterprises Co. Ltd., or Dongguan Haoshun Furniture Ltd.; Nantong Yushi Furniture Co., Ltd.; Shenzhen Xiande Furniture Factory; Tarzan Furniture Industries Ltd., or Samso Industries Ltd.; and Tianjin Master Home Furniture.

[6] *See Wooden Bedroom Furniture From the People's Republic of China: Final Results of Antidumping Duty Changed Circumstances Review,* 72 FR 60812 (October 20, 2007).

[7] *Wooden Bedroom Furniture From the PRC: Final Results of Redetermination Pursuant to the Court Remand Orders,* Court No. 05–00003 (August 1, 2005) (''*Labor Remand Redetermination*'').

[8] *Dorbest Ltd.* v. *United States,* 462 F. Supp. 2d 1262 (CIT 2006) (''*Dorbest I*'').

[9] *See Final Results of Redetermination Pursuant to Court Remand,* Court No. 05–00003 (May 25, 2007) (''*Dorbest I Remand Redetermination*'').

[10] *See Dorbest Ltd.* v. *United States,* 547 F. Supp. 2d 1321 (CIT 2008) (''*Dorbest II*'').

[11] *See id.*

[12] *See Final Results of Redetermination Pursuant to Court Remand,* Court No. 05–00003, July 15, 2008 (''*Dorbest II Remand Redetermination*'').

[13] *See Dorbest Ltd.* v. *United States,* 602 F. Supp. 2d 1287 (CIT 2009) (''*Dorbest III*''); *See also Wooden Bedroom Furniture From the People's Republic of China: Notice of Court Decision Not in Harmony,* 74 FR 5818 (February 2, 2009).

[14] *See Dorbest IV,* 604 F.3d at 1363.

regulation, and remanded with instructions to recalculate Dorbest's labor value in compliance with Section 773(c)(4) of the Tariff Act of 1930, as amended (''the Act'').[15]

On November 10, 2010, the Department issued its final remand redetermination pursuant to *Dorbest IV*.[16] In *Dorbest IV Remand Redetermination,* the Department recalculated its labor wage rate using data only from countries that met the statutory criteria.[17] The Department also recalculated the surrogate financial ratios applied to Dorbest, and re-included the financial statements from the four companies it had previously excluded in *Remand Redetermination II.*[18]

On February 9, 2011, the CIT remanded the Department's revised labor wage rate calculation, holding that the selection of economically comparable countries appeared arbitrarily biased toward the low end of the *per capita* gross national income (''GNI'') spectrum, and did not explain why higher income countries were excluded from the starting selection of economically comparable countries.[19] In *Dorbest V,* the Court sustained the Department's other data choices.[20]

On April 27, 2011, Commerce issued its remand redetermination pursuant to *Dorbest V*.[21] In *Dorbest V Redetermination,* the Department expanded the basket of economically comparable countries to also include countries with per capita GNIs above that of China, and revised Dorbest's labor value using data from this expanded basket of countries as its new starting point. On August 3, 2011, the Court sustained *Dorbest V Remand Redetermination* in *Dorbest VI.*

Timken Notice

In its decision in *Timken,* 893 F.2d at 341, as clarified by *Diamond Sawblades,* the CAFC has held that, pursuant to section 516A(e) of the Act, the Department must publish a notice of a court decision that is not ''in harmony'' with a Department determination and must suspend liquidation of entries pending a ''conclusive'' court decision. The CIT's August 03, 2011, judgment sustaining the Department's revised surrogate wage rate methodology for the valuation of Dorbest's labor inputs used in the production of wooden bedroom furniture constitutes a final decision of that court that is not in harmony with the Department's *Final Determination.* This notice is published in fulfillment of the publication requirements of *Timken.* Accordingly, the Department will continue the suspension of liquidation of all enjoined entries, pending the expiration of the period of appeal or, if appealed, pending a final and conclusive court decision.

Amended Final Determination and Order

Because there is now a final court decision, we are amending the *Final Determination* and *Order* to reflect the results of the *Dorbest Ltd.* v. *United States* litigation. We have revised the surrogate labor wage rate applicable to Dorbest to 0.44 USD per hour. As a result of this recalculated wage rate, the revised dumping margin for Dorbest for the *Final Determination* is 2.40 percent. Consistent with the Department's practice to include above *de minimis* margins in the calculation of the separate rate margin[22] the revised amended weighted-average dumping margin for respondents with separate-rate status is now 6.68 percent. The dumping margin determined for the PRC-wide entity remains unchanged.

The Department will issue instructions to U.S. Customs and Border Protection (''CBP'') to revise the cash deposit rates for companies where the cash deposit rates from the *Final Determination* continue to be in effect.[23] Accordingly, the Department will instruct CBP to begin collecting cash deposits for Dorbest at the revised rate of 2.40 percent. The Department will further instruct CBP to begin collecting cash deposits at the revised rate of 6.68 percent for the companies listed below:[24]

- Alexandre International Corp., or Southern Art Development Ltd., or Alexandre Furniture (Shenzhen) Co., Ltd., or Southern Art Furniture Factory
- Art Heritage International, Ltd., or Super Art Furniture Co., Ltd., or Artwork Metal & Plastic Co., Ltd., or Jibson Industries Ltd., or Always Loyal International
- Billy Wood Industrial (Dong Guan) Co., Ltd., or Great Union Industrial (Dongguan) Co., Ltd., or Time Faith Ltd.
- Changshu HTC Import & Export Co., Ltd.
- Chuan Fa Furniture Factory
- Clearwise Co., Ltd.
- Dongguan Hung Sheng Artware Products Co., Ltd., or Coronal Enterprise Co., Ltd.
- Dongguan Kingstone Furniture Co., Ltd., or Kingstone Furniture Co., Ltd.
- Dongying Huanghekou Furniture Industry Co., Ltd.
- Fortune Glory Industrial Ltd. (H.K. Ltd.) or Tradewinds Furniture Ltd., (Successor-in-interest to Nanhai Jiantai Woodwork Co., Ltd.)
- Guangzhou Maria Yee Furnishings Ltd., Pyla HK, Ltd., and Maria Yee, Inc.
- Hainan Jong Bao Lumber Co., Ltd., or Jibbon Enterprise Co., Ltd.
- Hang Hai Woodcraft's Art Factory
- Jiangmen Kinwai Furniture Decoration Co., Ltd.
- Jiangmen Kinwai International Furniture Co., Ltd.
- Jiangsu Yuexing Furniture Group Co., Ltd.
- Jiedong Lehouse Furniture Co., Ltd.
- Kuan Lin Furniture (Dong Guan) Co., Ltd., or Kuan Lin Furniture Factory, or Kuan Lin Furniture Co., Ltd.
- Kunshan Lee Wood Product Co., Ltd.
- Kunshan Summit Furniture Co., Ltd.
- Leefu Wood (Dongguan) Co., Ltd., or King Rich International, Ltd.
- Locke Furniture Factory, or Kai Chan Furniture Co., Ltd., or Kai Chan (Hong Kong) Enterprise Ltd., or Taiwan Kai Chan Co., Ltd.
- Nantong Dongfang Orient Furniture Co., Ltd.
- Nathan International Ltd., or Nathan Rattan Factory
- Passwell Corporation, or Pleasant Wave Ltd.
- Perfect Line Furniture Co., Ltd.
- Prime Wood International Co., Ltd., or Prime Best International Co., Ltd., or Prime Best Factory, or Liang Huang (Jiaxing) Enterprise Co., Ltd.
- PuTian JingGong Furniture Co., Ltd.
- Qingdao Liangmu Co., Ltd.
- Restonic (Dongguan) Furniture Ltd., or Restonic Far East (Samoa) Ltd.
- RiZhao SanMu Woodworking Co., Ltd.

[15] *See Dorbest IV Order,* 604 F.3d at 1372–73.

[16] *See Final Results of Redetermination Pursuant to Remand,* Consol. Court No. 05–00003, Slip Op. 10–79 (CIT, July 21, 2010) (November 10, 2010) (''*Dorbest IV Remand Redetermination*'').

[17] *See Dorbest IV Remand Redetermination,* at 8.

[18] *See Dorbest IV Remand Redetermination* at 4.

[19] *See Dorbest V* at 14–17.

[20] *See Dorbest V* at 28.

[21] *See Dorbest V Remand Redetermination.*

[22] *See, e.g., Preliminary Determination of Sales at Less Than Fair Value and Partial Affirmative Determination of Critical Circumstances: Certain Polyester Staple Fiber from the People's Republic of China,* 71 FR 77373, 77377 (December 26, 2006), unchanged in *Final Determination of Sales at Less Than Fair Value and Partial Affirmative Determination of Critical Circumstances: Certain Polyester Staple Fiber from the People's Republic of China,* 72 FR 19690 (April 19, 2007).

[23] Since the *Final Determination,* new cash deposit rates have been established for several companies that qualified for separate-rate status during the investigation. The Department will not issue revised cash deposit instructions for these companies.

[24] The companies listed herein include those which received a separate rate in the initial *Final Determination* but have not since received another separate rate (*e.g.,* as a respondent in the context of an administrative review) nor lost their separate rate during a subsequent administrative review.

- Sen Yeong International Co., Ltd., or Sheh Hau International Trading Ltd.
- Shanghai Jian Pu Export & Import Co., Ltd.
- Shanghai Maoji Imp and Exp Co., Ltd.
- Sheng Jing Wood Products (Beijing) Co., Ltd., or Telstar Enterprises Ltd.
- Shenzhen Forest Furniture Co., Ltd.
- Shenzhen Jiafa High Grade Furniture Co., Ltd., or Golden Lion International Trading Ltd.
- Shenzhen New Fudu Furniture Co., Ltd.
- Shenzhen Wonderful Furniture Co., Ltd.
- Songgang Jasonwood Furniture Factory, or Jasonwood Industrial Co., Ltd. S.A.
- Starwood Industries Ltd.
- Strongson Furniture (Shenzhen) Co., Ltd., or Strongson Furniture Co., Ltd., or Strongson (HK) Co.
- Sunforce Furniture (Hui-Yang) Co., Ltd., or Sun Fung Wooden Factory, or Sun Fung Co., or Shin Feng Furniture Co., Ltd., or Stupendous International Co., Ltd.
- Superwood Co., Ltd., or Lianjiang Zongyu Art Products Co., Ltd.
- Techniwood Industries Ltd., or Ningbo Furniture Industries Limited, or Ningbo Hengrun Furniture Co., Ltd.
- Tianjin Phu Shing Woodwork Enterprise Co., Ltd.
- Tube-Smith Enterprise (ZhangZhou) Co., Ltd., or Tube-Smith Enterprise (Haimen) Co., Ltd., or Billonworth Enterprises Ltd.
- U–Rich Furniture (Zhangzhou) Co., Ltd., or U–Rich Furniture Ltd.
- Woodworth Wooden Industries (Dong Guan) Co., Ltd.
- Xiamen Yongquan Sci-Tech Development Co., Ltd.
- Jiangsu XiangSheng Bedtime Furniture Co., Ltd.
- Yeh Brothers World Trade, Inc.
- Zhang Zhou Sanlong Wood Product Co., Ltd.
- Zhangjiagang Daye Hotel Furniture Co., Ltd.
- Zhangjiagang Zheng Yan Decoration Co., Ltd.
- Zhangzhou Guohui Industrial & Trade Co., Ltd.
- Zhongshan Fookyik Furniture Co., Ltd.
- Zhongshan Golden King Furniture Industrial Co., Ltd.
- Zhoushan For-Strong Wood Co., Ltd.

In accordance with section 735(c)(1)(B) of the Act, the Department will instruct CBP to collect cash deposits at the rates indicated above.

This notice is issued and published in accordance with sections 516A(c)(1), 735(d), and 777(i)(1) of the Act.

Dated: August 19, 2011.

Christian Marsh,

Acting Deputy Assistant Secretary for Import Administration.

[FR Doc. 2011–21950 Filed 8–25–11; 8:45 am]

BILLING CODE 3510–DS–P

DEPARTMENT OF COMMERCE

National Oceanic and Atmospheric Administration

Proposed Information Collection; Comment Request; Alaska Commercial Operator's Annual Report (COAR)

AGENCY: National Oceanic and Atmospheric Administration (NOAA), Commerce.

ACTION: Notice.

SUMMARY: The Department of Commerce, as part of its continuing effort to reduce paperwork and respondent burden, invites the general public and other Federal agencies to take this opportunity to comment on proposed and/or continuing information collections, as required by the Paperwork Reduction Act of 1995.

DATES: Written comments must be submitted on or before October 25, 2011.

ADDRESSES: Direct all written comments to Diana Hynek, Departmental Paperwork Clearance Officer, Department of Commerce, Room 6616, 14th and Constitution Avenue, NW., Washington, DC 20230 (or via the Internet at *dHynek@doc.gov*).

FOR FURTHER INFORMATION CONTACT: Requests for additional information or copies of the information collection instrument and instructions should be directed to Patsy A. Bearden, (907) 586–7008 or *patsy.bearden@noaa.gov.*

SUPPLEMENTARY INFORMATION:

I. Abstract

This request is for renewal of a currently approved information collection.

The Alaska Commercial Operator's Annual Report (COAR) is a report that collects harvest and production information broken out by specific criteria such as gear type, area, delivery and product type, and pounds and value. The COAR is due by April 1 of the year following any buying or processing activity.

Any person or company who received a Fisheries Business License from the Alaska Department of Revenue and an Intent to Operate Permit by Alaska Department of Fish and Game (ADF&G) is required to annually submit the COAR to State of Alaska, ADF&G, under Alaska Administrative Code (AAC), chapter 5 AAC 39.130. In addition, any person or company who receives an Exclusive Economic Zone (EEZ) only permit from ADF&G annually must submit a COAR to ADF&G. Any owner of a catcher/processor or mothership with a Federal permit operating in the EEZ off Alaska is required to annually submit a COAR to ADF&G under 50 CFR part 679.5(p).

The COAR provides information on ex-vessel and first wholesale values for statewide fish and shellfish products. Containing information from shoreside processors, stationary floating processors, motherships, and catcher/processors, this data collection yields equivalent annual product value information for all respective processing sectors and provides a consistent time series according to which groundfish resources may be managed more efficiently.

II. Method of Collection

The method of submittal is completion of a fillable file of the COAR online or completion of a paper form and mailed.

III. Data

OMB Control Number: 0648–0428.

Form Number: None.

Type of Review: Regular submission (renewal of a currently approved collection).

Affected Public: Business or other for-profit organizations.

Estimated Number of Respondents: 166.

Estimated Time per Response: 8 hours.

Estimated Total Annual Burden Hours: 1,328.

Estimated Total Annual Cost to Public: $415.

IV. Request for Comments

Comments are invited on: (a) Whether the proposed collection of information is necessary for the proper performance of the functions of the agency, including whether the information shall have practical utility; (b) the accuracy of the agency's estimate of the burden (including hours and cost) of the proposed collection of information; (c) ways to enhance the quality, utility, and clarity of the information to be collected; and (d) ways to minimize the burden of the collection of information on respondents, including through the use of automated collection techniques or other forms of information technology.

Comments submitted in response to this notice will be summarized and/or included in the request for OMB

approval of this information collection; they also will become a matter of public record.

Dated: August 22, 2011.

Gwellnar Banks,

Management Analyst, Office of the Chief Information Officer.

[FR Doc. 2011–21762 Filed 8–25–11; 8:45 am]

BILLING CODE 3510–22–P

DEPARTMENT OF COMMERCE

National Oceanic and Atmospheric Administration

RIN 0648–XA660

South Atlantic Fishery Management Council Meeting

AGENCY: National Marine Fisheries Service (NMFS), National Oceanic and Atmospheric Administration (NOAA), Commerce.

ACTION: Notice of public meeting of the South Atlantic Fishery Management Council.

SUMMARY: The South Atlantic Fishery Management Council will hold a joint meeting of its Shrimp and Deepwater Shrimp Advisory Panels (AP); meetings of its Shrimp Committee; Spiny Lobster Committee; Law Enforcement Committee; Ecosystem-Based Management Committee; Executive/Finance Committees; King and Spanish Mackerel Committee; Southeast Data, Assessment and Review (SEDAR) Committee; Golden Crab Committee; Snapper Grouper Committee; and a meeting of the Full Council. The Council will take action as necessary. The Council will also hold an informal public question and answer session regarding agenda items and a public comment session. See **SUPPLEMENTARY INFORMATION** for additional details.

DATES: The Council meeting will be held September 12–16, 2011. See **SUPPLEMENTARY INFORMATION** for specific dates and times.

ADDRESSES: The meeting will be held at the Charleston Marriott Hotel, 170 Lockwood Blvd., Charleston, SC 29403; telephone: (1–800) 968–3569 or (843) 723–3000; fax: (843) 723–0276. Copies of documents are available from Kim Iverson, Public Information Officer, South Atlantic Fishery Management Council, 4055 Faber Place Drive, Suite 201, North Charleston, SC 29405.

FOR FURTHER INFORMATION CONTACT: Kim Iverson, Public Information Officer; telephone: (843) 571–4366 or toll free at (866) SAFMC–10; fax: (843) 769–4520; e-mail: *kim.iverson@safmc.net*.

SUPPLEMENTARY INFORMATION:

Meeting Dates

1. Joint Shrimp and Deepwater Shrimp AP Meeting: September 12, 2011, 1:30 p.m. until 5:30 p.m.

The joint Shrimp and Deepwater Shrimp APs will receive reports on: The shrimp closure off of South Carolina; Economic Data Collection; Status of Bycatch in the Atlantic Shrimp Fishery (including rock and royal red shrimp); and Section 7 Consultation, as it pertains to turtles and sawfish. The joint APs will also review potential items for Shrimp Amendment 9 concerning fishery management measures for royal red, rock and pink shrimp, and develop recommendations for the Shrimp Committee.

2. Shrimp Committee Meeting: September 13, 2011, 8:30 a.m. until 12 noon.

The Shrimp Committee will review recommendations from the joint Shrimp AP and develop actions and options for Shrimp Amendment 9.

3. Spiny Lobster Committee Meeting: September 13, 2011, 1:30 p.m. until 3 p.m.

The Spiny Lobster Committee will receive a report on actions necessary to meet the Biological Opinion relative to staghorn and elkhorn corals and will receive an overview of Spiny Lobster Amendment 11 addressing gear modifications and area restrictions relative to protected resources. The Committee will develop preferred alternatives and approve Amendment 11/Environmental Impact Statement (EIS) for public hearings.

4. Law Enforcement Committee Meeting: September 13, 2011, 3 p.m. until 4 p.m.

The Law Enforcement Committee will review the recommendations from the Law Enforcement AP for the Law Enforcement Officer of the Year award. The Committee will also discuss other issues as appropriate.

5. Ecosystem-Based Management Committee: September 13, 2011, 4 p.m. until 5:30 p.m.

The Ecosystem-Based Management Committee will receive a presentation on lionfish and review the status of Comprehensive Ecosystem-Based Amendment (CEBA) 2/Environmental Assessment (EA). The Committee will provide direction to staff on management measures to be included in CEBA 3 and receive an update on ecosystem activities.

6. Executive/Finance Committees: September 14, 2011, 8:30 a.m. until 9:30 a.m.

The Executive/Finance Committees will receive a status report on the calendar year (CY) 2011 Council expenditures and activities. The committees will review and discuss the development of CY2012 Council activities' schedule and budget.

7. King and Spanish Mackerel Committee: September 14, 2011, 9:30 a.m. until 10:30 a.m.

The Mackerel Committee will review the status of commercial and recreational catches versus quotas for species under quota management as well as the status of Amendment 18 to the Coastal Migratory Pelagic Fishery Management Plan for the Gulf of Mexico and South Atlantic, which establishes Annual Catch Limits (ACLs) and Accountability Measures (AMs) for king mackerel, Spanish mackerel, and cobia. The Committee will modify the amendment as necessary. Additionally, the Committee will develop terms of reference (TOR) and appointments for the SEDAR 28 stock assessment for Atlantic and Gulf Spanish mackerel and cobia. The Committee will receive a presentation on results of cobia bag and size limits and will provide direction to Council staff.

8. SEDAR Committee: September 14, 2011, 10:30 a.m. until 12 noon. (*Note:* Portion of the meeting will be CLOSED.)

The SEDAR Committee will receive an overview of SEDAR activities as well as an update on the SEDAR process and the Southeast Fisheries Science Center (SEFSC) data program. The Committee will develop recommendations for the SEDAR Steering Committee and review the appointed observer comments as well as the Stock Assessment and Fishery Evaluation (SAFE) report for snapper grouper species. The Committee will also make the SEDAR 28 appointments (Closed Session).

9. Golden Crab Committee Meeting: September 14, 2011, 1:30 p.m. until 3:30 p.m.

The Golden Crab Committee will review the status of commercial catches versus quotas, review Golden Crab Amendment 6 addressing catch shares, provide direction to staff, and approve Amendment 6 for public hearings.

10. Snapper Grouper Committee Meeting: September 14, 2011, 3:30 p.m. until 5 p.m. and September 15, 2011, 8:30 a.m. until 12 noon.

The Snapper Grouper Committee will receive a report on Oculina activities and review the status of commercial and recreational catches versus quotas for all species under quota management. The Committee will address any necessary actions as the result of these reports. The Committee will also receive an update on the status of Regulatory Amendment 11, which addresses options for ending overfishing of speckled hind and warsaw grouper.

The Committee will review the corrected final Comprehensive Annual Catch Limit Amendment, which establishes ACLs and Accountability Measures (AMs) for species that are not currently undergoing overfishing, and approve the document for formal review by the Secretary of Commerce. The Committee will also review public hearing comments for Amendment 24/EIS regarding a rebuilding plan for red grouper, modify Amendment 24 as appropriate, approve the document, and provide direction to staff.

The Committee will additionally review the status of Amendment 18A pertaining to black sea bass and data collection, Amendment 18B/EA pertaining to golden tilefish, and Amendment 20A/EA addressing the wreckfish Individual Transferable Quota (ITQ) program. The Committee will modify the amendments as necessary and approve the amendments for public hearing.

Note: There will be an informal public question and answer session with the Regional Administrator from the NMFS and the Council Chairman on September 14, 2011, beginning at 5:30 p.m.

Council Session: September 15, 2011, 1:30 p.m. Until 5:30 p.m. and September 16, 2011, 8:30 a.m. Until 12 Noon

September 15, 2011, 1:30 p.m. Until 5:30 p.m.

From 1:30 p.m. until 2 p.m., the Council will call the meeting to order, adopt the agenda, approve the August 2011 meeting minutes and elect a chairman and vice chairman.

Note: A public comment period will be held on September 15, 2011, beginning at 2 p.m., on the corrected Comprehensive ACL Amendment, followed by public comment on any other item on the Council agenda.

From 3:30 p.m. until 4 p.m., the Council will: Receive a report from the Snapper Grouper Committee; approve the corrected final Comprehensive ACL Amendment for formal review by the Secretary of Commerce; approve Amendment 18A/EIS, Amendment 18B/EA and Amendment 20A/EA for public hearing; consider Committee recommendations; and take action as appropriate.

From 4 p.m. until 4:15 p.m., the Council will receive a report from the King and Spanish Mackerel Committee, consider recommendations, take action as appropriate and take any actions necessary on Amendment 18 based on the August Gulf Council meeting.

From 4:15 p.m. until 4:30 p.m., the Council will receive a report from the Ecosystem-Based Management Committee, consider recommendations and take action as appropriate.

From 4:30 p.m. until 4:45 p.m., the Council will receive a report from the Shrimp Committee, consider recommendations and take action as appropriate.

From 4:45 p.m. until 5 p.m., the Council will receive a report from the Golden Crab Committee, consider recommendations and take action as appropriate.

From 5 p.m. until 5:15 p.m., the Council will receive a report from the SEDAR Committee, consider recommendations and take action as appropriate.

From 5:15 p.m. until 5:30 p.m., the Council will receive a report from the Executive/Finance Committees, consider recommendations and take action as appropriate.

Council Session: September 16, 2011, 8:30 a.m. Until 12 Noon

From 8:30 a.m. until 9 a.m., the Council will receive a legal briefing on litigation. (Closed Session)

From 9 a.m. until 9:15 a.m., the Council will receive a report from the Law Enforcement Committee, consider recommendations and take action as appropriate.

From 9:15 a.m. until 9:30 a.m., the Council will receive a report from the Spiny Lobster Committee, consider recommendations from the Committee and take action as appropriate.

From 9:30 a.m. until 11 a.m., the Council will receive status reports from the NOAA Southeast Regional Office, review and develop recommendations on Experimental Fishing Permits as necessary, and receive status reports from the NMFS Southeast Fishery Science Center.

From 11 a.m. until 12 noon, the Council will review agency and liaison reports and discuss other business, including upcoming meetings.

Documents regarding these issues are available from the Council office (see **ADDRESSES**).

Although non-emergency issues not contained in this agenda may come before this Council for discussion, those issues may not be the subjects of formal final Council action during these meetings. Council action will be restricted to those issues specifically listed in this notice and any issues arising after publication of this notice that require emergency action under section 305 (c) of the Magnuson-Stevens Act, provided the public has been notified of the Council's intent to take final action to address the emergency.

Except for advertised (scheduled) public hearings and public comment, the times and sequence specified on this agenda is subject to change.

Special Accommodations

These meetings are physically accessible to people with disabilities. Requests for sign language interpretation or other auxiliary aids should be directed to the Council office (see **ADDRESSES**) by September 1, 2011.

Dated: August 22, 2011.

Tracey L. Thompson,

Acting Director, Office of Sustainable Fisheries, National Marine Fisheries Service.

[FR Doc. 2011–21843 Filed 8–25–11; 8:45 am]

BILLING CODE 3510–22–P

DEPARTMENT OF COMMERCE

National Oceanic and Atmospheric Administration

RIN 0648–XA661

Pacific Fishery Management Council; Public Meetings

AGENCY: National Marine Fisheries Service (NMFS), National Oceanic and Atmospheric Administration (NOAA), Commerce.

ACTION: Notice of public meetings.

SUMMARY: The Pacific Fishery Management Council (Pacific Council) and its advisory entities will hold public meetings.

DATES: The Pacific Council and its advisory entities will meet September 12–19, 2011. The Pacific Council meeting will begin on Wednesday, September 14, 2011 at 9:30 a.m., reconvening each day through Monday, September 19, 2011. All meetings are open to the public, except a closed session will be held at the end of the open session business day on Wednesday, September 14 to address litigation and personnel matters. The Pacific Council will meet as late as necessary each day to complete its scheduled business.

ADDRESSES: Meetings of the Pacific Council and its advisory entities will be held at the Marriott San Mateo, 1770 South Amphlett Boulevard, San Mateo, California 94402; telephone: 650–635–6000.

Council address: Pacific Fishery Management Council, 7700 NE Ambassador Place, Suite 101, Portland, OR 97220.

FOR FURTHER INFORMATION CONTACT: Dr. Donald O. McIsaac, Executive Director; telephone: (503) 820–2280 or (866) 806–7204 toll free; or access the Pacific Council Web site, *http://www.pcouncil.org* for the current

meeting location, proposed agenda, and meeting briefing materials.

SUPPLEMENTARY INFORMATION: The following items are on the Pacific Council agenda, but not necessarily in this order:

A. Call to Order
  1. Opening Remarks
  2. Council Member Appointments
  3. Roll Call
  4. Executive Director's Report
  5. Approve Agenda
B. Enforcement Issues
  1. Current Enforcement Issues
C. Marine Protected Areas
  1. Monterey Bay National Marine Sanctuary Proposed Ecosystem Based Management Initiative
D. Habitat
  1. Current Habitat Issues
E. Highly Migratory Species Management
  1. National Marine Fisheries Service Report
  2. Swordfish Management Workshop Report
F. Administrative Matters
  1. Legislative Matters
  2. Approval of Council Meeting Minutes
  3. Fiscal Matters
  4. Membership Appointments and Council Operating Procedures
  5. Future Council Meeting Agenda and Workload Planning
G. Groundfish Management
  1. National Marine Fisheries Service Report
  2. Update and Joint NMFS/Pacific Council Hearing on the Proposed Secretarial Amendment for Groundfish Amendment 16–5 and 2012 Harvest Specifications and Management Measures
  3. Review of Exempted Fishing Permits for 2012 Groundfish Fisheries
  4. Stock Assessments for 2013–14 Groundfish Fisheries
  5. Biennial Management Process for 2013–14 Groundfish Fisheries—Part 1
  6. Trawl Rationalization Trailing Actions
  7. Consider Inseason Adjustments—Part I
  8. Emerging Issues Under Trawl Rationalization and Intersector Allocation
  9. Biennial Management Process for 2013–14 Groundfish Fisheries—Part 2
  10. Science Improvements for the Next Groundfish Management Cycle
  11. Consideration of Inseason Adjustments—Part 2, if Needed
H. Salmon Management
  1. Progress Reports on Columbia River Tule and Sacramento Winter Run Chinook Management Issues
  2. 2011 Methodology Review
I. Pacific Halibut Management
  1. 2012 Pacific Halibut Regulations
  2. Pacific Halibut Bycatch Estimate for the 2012 Groundfish Fisheries

Schedule of Ancillary Meetings

Day 1—Monday, September 12, 2011
  Scientific and Statistical Committee Economic Subcommittee—8 a.m.
Day 2—Tuesday, September 13, 2011
  Groundfish Advisory Subpanel—8 a.m.
  Groundfish Management Team—8 a.m.
  Highly Migratory Species Advisory Subpanel—8 a.m.
  Highly Migratory Species Management Team—8 a.m.
  Scientific and Statistical Committee—8 a.m.
  Habitat Committee—8:30 a.m.
  Legislative Committee—2 p.m.
  Budget Committee—3:30 p.m.
  Enforcement Consultants—4:30 p.m.
Day 3—Wednesday, September 14, 2011
  California State Delegation—7 a.m.
  Oregon State Delegation—7 a.m.
  Washington State Delegation—7 a.m.
  Groundfish Advisory Subpanel—8 a.m.
  Groundfish Management Team—8 a.m.
  Highly Migratory Species Advisory Subpanel—8 a.m.
  Highly Migratory Species Management Team—8 a.m.
  Salmon Technical Team—8 a.m.
  Scientific and Statistical Committee—8 a.m.
  Enforcement Consultants—As Needed
  Stock Assessment Briefing—7:30 p.m.
Day 4—Thursday, September 15, 2011
  California State Delegation—7 a.m.
  Oregon State Delegation—7 a.m.
  Washington State Delegation—7 a.m.
  Groundfish Advisory Subpanel—8 a.m.
  Groundfish Management Team—8 a.m.
  Salmon Technical Team—8 a.m.
  Scientific and Statistical Committee—8 a.m.
  Enforcement Consultants—As Needed
  Chair's Reception—6 p.m.
Day 5—Friday, September 16, 2011
  California State Delegation—7 a.m.
  Oregon State Delegation—7 a.m.
  Washington State Delegation—7 a.m.
  Groundfish Advisory Subpanel—8 a.m.
  Groundfish Management Team—8 a.m.
  Salmon Advisory Subpanel—8 a.m.
  Salmon Technical Team—8 a.m.
  Enforcement Consultants—As Needed
Day 6—Saturday, September 17, 2011
  California State Delegation—7 a.m.
  Oregon State Delegation—7 a.m.
  Washington State Delegation—7 a.m.
  Groundfish Advisory Subpanel—8 a.m.
  Groundfish Management Team—8 a.m.
  Enforcement Consultants—As Needed
Day 7—Sunday, September 18, 2011
  California State Delegation—7 a.m.
  Oregon State Delegation—7 a.m.
  Washington State Delegation—7 a.m.
  Groundfish Advisory Subpanel—8 a.m.
  Groundfish Management Team—8 a.m.
  Enforcement Consultants—As Needed
Day 8—Monday, September 19, 2011
  California State Delegation—7 a.m.
  Oregon State Delegation—7 a.m.
  Washington State Delegation—7 a.m.
  Enforcement Consultants—As Needed

Although non-emergency issues not contained in this agenda may come before this Council for discussion, those issues may not be the subject of formal Council action during this meeting. Council action will be restricted to those issues specifically listed in this notice and any issues arising after publication of this notice that require emergency action under Section 305(c) of the Magnuson-Stevens Fishery Conservation and Management Act, provided the public has been notified of the Council's intent to take final action to address the emergency.

Special Accommodations

These meetings are physically accessible to people with disabilities. Requests for sign language interpretation or other auxiliary aids should be directed to Carolyn Porter at (503) 820–2280 at least 5 days prior to the meeting date.

Dated: August 22, 2011.

Tracey L. Thompson,

Acting Director, Office of Sustainable Fisheries, National Marine Fisheries Service.

[FR Doc. 2011–21844 Filed 8–25–11; 8:45 am]

BILLING CODE 3510–22–P

DEPARTMENT OF COMMERCE

National Oceanic and Atmospheric Administration

RIN 0648–XA664

New England Fishery Management Council; Public Meeting

AGENCY: National Marine Fisheries Service (NMFS), National Oceanic and Atmospheric Administration (NOAA), Commerce.

ACTION: Notice; public meeting.

SUMMARY: The New England Fishery Management Council (Council) is scheduling a public meeting of its Scientific and Statistical Committee (SSC), on September 14–15, 2011, to consider actions affecting New England fisheries in the exclusive economic zone (EEZ). Recommendations from this group will be brought to the full Council for formal consideration and action, if appropriate.

DATES: This meeting will be held on Wednesday, September 14, 2011 at 10 a.m. and Thursday, September 15, 2011 at 9 a.m.

ADDRESSES: The meeting will be held at the Hilton Providence, 21 Atwells Avenue, Providence, RI 02903; telephone: (401) 831–3900; fax: (407) 751–0007.

Council address: New England Fishery Management Council, 50 Water Street, Mill 2, Newburyport, MA 01950.

FOR FURTHER INFORMATION CONTACT: Paul J. Howard, Executive Director, New England Fishery Management Council; telephone: (978) 465–0492.

SUPPLEMENTARY INFORMATION:

Wednesday, September 14, 2011–Thursday, September 15, 2011

The Scientific and Statistical Committee (SSC) will recommend ABCs for the Northeast Multispecies FMP for FY 2012–2014. Additionally, the SSC will develop comments on terms of reference for upcoming assessments for Atlantic sea herring and Southern New England yellowtail flounder scheduled for the 54th Stock Assessment Workshop (SAW) in the spring of 2012. The Committee also will discuss upcoming priorities and tasking, improving outreach, research priorities, possible use for advisory panel in the process for making acceptable biological catch (ABC) recreational for fishery management plans.

Although non-emergency issues not contained in this agenda may come before this group for discussion, those issues may not be the subject of formal action during this meeting. Action will be restricted to those issues specifically listed in this notice and any issues arising after publication of this notice that require emergency action under section 305(c) of the Magnuson-Stevens Act, provided the public has been notified of the Council's intent to take final action to address the emergency.

Special Accommodations

This meeting is physically accessible to people with disabilities. Requests for sign language interpretation or other auxiliary aids should be directed to Paul J. Howard, Executive Director, at (978) 465–0492, at least 5 days prior to the meeting date.

Authority: 16 U.S.C. 1801 *et seq.*

Dated: August 23, 2011.

Tracey L. Thompson,

Acting Director, Office of Sustainable Fisheries, National Marine Fisheries Service.

[FR Doc. 2011–21880 Filed 8–25–11; 8:45 am]

BILLING CODE 3510–22–P

DEPARTMENT OF COMMERCE

National Oceanic and Atmospheric Administration

RIN 0648–XA667

North Pacific Fishery Management Council; Public Meeting

AGENCY: National Marine Fisheries Service (NMFS), National Oceanic and Atmospheric Administration (NOAA), Commerce.

ACTION: Notice of a public meeting of the North Pacific Fishery Management Council's (NPFMC) Crab Plan Team (CPT).

SUMMARY: The CPT will meet September 19–22, 2011 at the Alaska Fishery Science Center, 7600 Sand Point Way, NE., Building 4, Traynor Room, Seattle, WA.

DATES: The meeting will be held September 19–22, 2011, from 9 a.m. to 5 p.m.

ADDRESSES: The meeting will be held at the Alaska Fishery Science Center, 7600 Sand Point Way, NE., Building 4, Traynor Room, Seattle, WA.

Council address: North Pacific Fishery Management Council, 605 W. 4th Avenue, Suite 306, Anchorage, AK 99501–2252.

FOR FURTHER INFORMATION CONTACT: Diana Stram; telephone: (907) 271–2809.

SUPPLEMENTARY INFORMATION: The Plan Team meeting agenda includes: Finalize assessments (including Overfishing Fishing Limits and Acceptable Biological Catch recommendations) for Tanner Crab, Snow Crab, Bristol Bay Red King Crab, Saint Matthew Blue King Crab King Crab, Pribilof Island Blue King Crab, Aleutian Island Golden King Crab; Review ecosystem considerations; Review/revise Economic Stock Assessment Fishery Evaluation report; Review overview of Nearshore Bristol Bay survey; and Discussion of Bmsy proxy criteria and time frames based on results of current assessments and guidelines for upcoming assessment cycle.

The Agenda is subject to change, and the latest version will be posted at *http://www.alaskafisheries.noaa.gov/npfmc/.*

Special Accommodations

These meetings are physically accessible to people with disabilities. Requests for sign language interpretation or other auxiliary aids should be directed to Gail Bendixen at (907) 271–2809 at least 7 working days prior to the meeting date.

Dated: August 23, 2011.

Tracey L. Thompson,

Acting Director, Office of Sustainable Fisheries, National Marine Fisheries Service.

[FR Doc. 2011–21891 Filed 8–25–11; 8:45 am]

BILLING CODE 3510–22–P

DEPARTMENT OF COMMERCE

National Oceanic and Atmospheric Administration

RIN 0648–XA666

Gulf of Mexico Fishery Management Council; Public Meeting

AGENCY: National Marine Fisheries Service (NMFS), National Oceanic and Atmospheric Administration (NOAA), Commerce.

ACTION: Council to convene public meeting.

SUMMARY: The Gulf of Mexico Fishery Management Council will convene a public meeting via webinar of the Ecosystem Scientific and Statistical Committee (SSC).

DATES: The meeting will convene at 8 a.m. Eastern time on Thursday, September 15, 2011 and is expected to conclude by 12 p.m.

ADDRESSES: The meeting will be held via webinar and will be accessible via Internet. Please go to the Gulf of Mexico Fishery Management Council's Web site at *http://www.gulfcouncil.org* for instructions.

Council address: Gulf of Mexico Fishery Management Council, 2203 N. Lois Avenue, Suite 1100, Tampa, FL 33607.

FOR FURTHER INFORMATION CONTACT: Dr. Karen Burns, Ecosystem Management Specialist; Gulf of Mexico Fishery Management Council; telephone: (813) 348–1630.

SUPPLEMENTARY INFORMATION: The Ecosystem Scientific and Statistical Committee will convene to discuss details concerning a proposed joint workshop of the Ecosystem Scientific and Statistical Committee and the Socio-economic Scientific and Statistical Committee to begin the process of determining a mechanism for including socio-economic input into Ecosystem Scientific and Statistical Committee recommendations moving toward ecosystem based management. The Ecosystem Scientific and Statistical Committee will also discuss and develop their Strategic Plan, and a presentation on the prior Standing Scientific and Statistical Committee meeting will be given.

Interested persons must register to participate in the webinar via the Gulf Council's Web site at *http://www.gulfcouncil.org.* Participation may be by computer or telephone. Agenda and other related materials can be obtained by calling (813) 348–1630. Materials will also be available to download from the Gulf Council's ftp site. Click on the ftp server under Quick Links, scroll to the Ecosystem folder. In the Ecosystem folder click on the directory named Ecosystem SSC meeting-2011-09.

Although other non-emergency issues not on the agenda may come before the Ecosystem Scientific and Statistical Committee for discussion, in accordance with the Magnuson-Stevens Fishery Conservation and Management Act (Magnuson-Stevens Act), those issues may not be the subject of formal action during this meeting. Actions of the Working Group will be restricted to those issues specifically identified in the agenda and any issues arising after publication of this notice that require emergency action under Section 305(c) of the Magnuson-Stevens Act, provided the public has been notified of the Council's intent to take action to address the emergency.

Special Accommodations

This meeting is physically accessible to people with disabilities. Requests for sign language interpretation or other auxiliary aids should be directed to Kathy Pereira at the Council (see **ADDRESSES**) at least 5 working days prior to the meeting.

Dated: August 23, 2011.

Tracey L. Thompson,

Acting Director, Office of Sustainable Fisheries, National Marine Fisheries Service.

[FR Doc. 2011–21890 Filed 8–25–11; 8:45 am]

BILLING CODE 3510–22–P

DEPARTMENT OF COMMERCE

National Oceanic and Atmospheric Administration

RIN 0648–XA665

New England Fishery Management Council; Public Meeting

AGENCY: National Marine Fisheries Service (NMFS), National Oceanic and Atmospheric Administration (NOAA), Commerce.

ACTION: Notice; public meeting.

SUMMARY: The New England Fishery Management Council (Council) is scheduling a public meeting of its Joint Skate/Whiting Committee and Whiting Advisory Panel, on September 14–15, 2011, to consider actions affecting New England fisheries in the exclusive economic zone (EEZ). Recommendations from this group will be brought to the full Council for formal consideration and action, if appropriate.

DATES: This meeting will be held on Wednesday, September 14 and Thursday, September 15, 2011 at 9:30 a.m. each day.

ADDRESSES: The meeting will be held at the Hilton Providence, 21 Atwells Avenue, Providence, RI 02903; telephone: (401) 831–3900; fax: (407) 751–0007.

Council address: New England Fishery Management Council, 50 Water Street, Mill 2, Newburyport, MA 01950.

FOR FURTHER INFORMATION CONTACT: Paul J. Howard, Executive Director, New England Fishery Management Council; telephone: (978) 465–0492.

SUPPLEMENTARY INFORMATION:

Wednesday, September 14, 2011–Thursday, September 15, 2011

The Oversight Committee will meet jointly with the Whiting Advisory Panel to finalize and recommend potential management alternatives for Multispecies FMP Amendment 19 for the small mesh fishery (red hake, silver hake, offshore hake). These alternatives will include Annual Catch Limit (ACL) measures (allocations, buffers for management uncertainty, landings limits), Accountability Measures (AM), and possibly other measures to regulate the fishery and prevent catches from exceeding the ACL. Committee recommendations to include alternatives in Draft Amendment 19 will be made at the September 26–29 Council meeting.

If necessary, the Whiting Advisory Panel may meet separately during the meeting. The Skate/Whiting Oversight Committee will also review a final draft skate specifications package and make recommendations at the Council meeting. The Oversight Committee may discuss other business regarding whiting and skate management.

Although non-emergency issues not contained in this agenda may come before this group for discussion, those issues may not be the subject of formal action during this meeting. Action will be restricted to those issues specifically listed in this notice and any issues arising after publication of this notice that require emergency action under section 305(c) of the Magnuson-Stevens Act, provided the public has been notified of the Council's intent to take final action to address the emergency.

Special Accommodations

This meeting is physically accessible to people with disabilities. Requests for sign language interpretation or other auxiliary aids should be directed to Paul J. Howard, Executive Director, at (978) 465–0492, at least 5 days prior to the meeting date.

Authority: 16 U.S.C. 1801 *et seq.*

Dated: August 23, 2011.

Tracey L. Thompson,

Acting Director, Office of Sustainable Fisheries, National Marine Fisheries Service.

[FR Doc. 2011–21882 Filed 8–25–11; 8:45 am]

BILLING CODE 3510–22–P

COMMITTEE FOR PURCHASE FROM PEOPLE WHO ARE BLIND OR SEVERELY DISABLED

Procurement List; Additions

AGENCY: Committee for Purchase From People Who Are Blind or Severely Disabled.

ACTION: Additions to the Procurement List.

SUMMARY: This action adds products and services to the Procurement List that will be furnished by nonprofit agencies employing persons who are blind or have other severe disabilities.

DATES: *Effective Date:* 9/26/2011.

ADDRESSES: Committee for Purchase From People Who Are Blind or Severely Disabled, Jefferson Plaza 2, Suite 10800, 1421 Jefferson Davis Highway, Arlington, Virginia 22202–3259.

FOR FURTHER INFORMATION CONTACT: Patricia Briscoe, Telephone: (703) 603–7740, Fax: (703) 603–0655, or e-mail *CMTEFedReg@AbilityOne.gov.*

SUPPLEMENTARY INFORMATION:

Additions

On 6/17/2011 (76 FR 35415–35417); 6/24/2011 (76 FR 37069–37070); 7/1/2011 (76 FR 38641–38642); and 7/8/2011 (76 FR 40342–40343), the Committee for Purchase From People Who Are Blind or Severely Disabled published notices of proposed additions to the Procurement List.

After consideration of the material presented to it concerning capability of qualified nonprofit agencies to furnish the products and services and impact of the additions on the current or most recent contractors, the Committee has determined that the products and services listed below are suitable for procurement by the Federal Government under 41 U.S.C. 46–48c and 41 CFR 51–2.4.

Regulatory Flexibility Act Certification

I certify that the following action will not have a significant impact on a substantial number of small entities. The major factors considered for this certification were:

1. The action will not result in any additional reporting, recordkeeping or other compliance requirements for small entities other than the small organizations that will furnish the products and services to the Government.

2. The action will result in authorizing small entities to furnish the products and services to the Government.

3. There are no known regulatory alternatives which would accomplish the objectives of the Javits-Wagner-O'Day Act (41 U.S.C. 46–48c) in connection with the products and services proposed for addition to the Procurement List.

End of Certification

Accordingly, the following products and services are added to the Procurement List:

Products

NSN: 7530–00–NIB–1004—Notebook, Spiral Bound, 100% PCW, 8½x11″, 80 sheets, College Rule, White.

NSN: 7530–00–NIB–1005—Notebook, Spiral Bound, 100% PCW, 8½x11″, 100 sheets, College Rule, White.

NSN: 7530–00–NIB–1007—Notebook, Spiral Bound, 100% PCW, 5x7½″, 80 sheets, College Rule, White.

NSN: 7530–00–NIB–1008—Notebook, Spiral Bound, 100% PCW, 6x9½″, 80 sheets, College Rule, White.

NSN: 7530–00–NIB–1010—Notebook, Spiral Bound, 100% PCW, 6x9½″, 150 sheets, College Rule, White.

NSN: 7530–00–NIB–1011—Notebook, Spiral Bound, 100% PCW, 8½x11″, 200 sheets, College Rule, White.

NSN: 7530–00–NIB–1018—Notebook, Stenographer's, Biobased Begasse Paper, 6x9″, 80 sheets, Gregg Rule, White.

NSN: 7530–00–NIB–1019—Notebook, Spiral Bound, Biobased Begasse Paper, 8x10½″, 70 sheets, College Rule, White.

NSN: 7530–00–NIB–1021—Notebook, Spiral Bound, Biobased Begasse Paper, 8x11″, 100 sheets, College Rule, White.

NSN: 7530–00–NIB–1022—Notebook, Spiral Bound, Biobased Begasse Paper, 6x9½″, 150 sheets, College Rule, White.

NSN: 7530–00–NIB–1024—Notebook, Stenographer's, 100% PCW, 6x9″, 60 sheets, Gregg Rule, White.

NSN: 7530–00–NIB–1025—Notebook, Spiral Bound, 100% PCW, 8x10½″, 70 sheets, Wide Rule, White.

Coverage: A–List for the Total Government Requirement as aggregated by the General Services Administration.

NSN: 7530–00–NIB–1003—Notebook, Memorandum Book, 100% PCW, 3x5″, 60 sheets, Narrow Rule, White.

NSN: 7530–00–NIB–1006—Notebook, Spiral Bound, 100% PCW, 8½x11″, 100 sheets, Wide Rule, White.

NSN: 7530–00–NIB–1009—Notebook, Spiral Bound, 100% PCW, 8½x11″, 120 sheets, College Rule, White.

NSN: 7530–00–NIB–1020—Notebook, Spiral Bound, Biobased Begasse Paper, 5x7 ½″, 80 sheets, College Rule, White.

NSN: 7530–00–NIB–1023—Notebook, Spiral Bound, Biobased Begasse Paper, 8½x11″, 200 sheets, College Rule, White.

Coverage: B–List for the Broad Government Requirement as aggregated by the General Services Administration.

NPA: The Arkansas Lighthouse for the Blind, Little Rock, AR.

Contracting Activity: General Services Administration, New York, NY.

NSN: 7530–01–434–4198—Index Maker, Dividers, 5–Tab, Multi-Color.

NSN: 7530–00–NIB–0916—Index Maker, Dividers, 8–Tab, Multi-Color.

NSN: 7530–00–NIB–0917—Index Maker, Dividers, 5–Tab, White.

NSN: 7530–00–NIB–0918—Index Maker, Dividers, 8–Tab, White.

NSN: 7530–00–NIB–0919—Index Maker, Dividers, 5–Tab, 5 Set Pack, White.

NSN: 7530–00–NIB–0920—Index Maker, Dividers, 8–Tab, 5 Set Pack, White.

NPA: South Texas Lighthouse for the Blind, Corpus Christi, TX. Contracting Activity: General Services Administration, New York, NY.

Coverage: A–List for the Total Government Requirement as aggregated by the General Services Administration.

NSN: 8020–00–NIB–0011—Brush, Paint, Flat Sash, 3″, Silver Filament.

NSN: 8020–00–NIB–0013—Brush, Paint, Angle Sash, 2″, Silver Filament.

NSN: 8020–00–NIB–0014—Brush, Paint, Angle Sash, 2.5″ Silver Filament.

NSN: 8020–00–NIB–0019—Cover, Paint Roller, 9″, Knit Fabric, Extra Strength Core, 1/2″ Nap.

NSN: 8020–00–NIB–0020—Cover, Paint Roller, 9″, Knit Fabric, ⅜″ NAP; High Capacity.

NSN: 8020–00–NIB–0023—Cover, Paint Roller, 9″, Woven fabric, ⅜″ NAP; High Capacity, Professional Grade.

NSN: 8020–00–NIB–0024—Cover, Paint Roller, 9″, Woven fabric, ½″ Nap.

NSN: 8020–00–NIB–0033—Brush, Paint, Flat Sash, 3″, White Filament.

NSN: 8020–00–NIB–0034—Brush, Paint, Angle Sash, 2″, White Filament.

NSN: 8020–00–NIB–0035—Brush, Paint, Angle Sash, 2.5″, White Filament.

NSN: 8020–00–NIB–0039—Frame, Paint roller, Professional Grade.

NSN: 8020–00–NIB–0040—Pole, Extension, Paint 4–8′.

NSN: 8020–00–NIB–0041—Tray, Paint, Plastic, 1 Quart.

NSN: 8020–00–NIB–0042—Liner, Tray, Paint, Plastic, 1 Quart.

NPA: Industries for the Blind, Inc., West Allis, WI.

Contracting Activity: General Services Administration, Kansas City, MO.

Coverage: B–List for the Broad Government Requirement as aggregated by the General Services Administration.

The Committee for Purchase From People Who Are Blind or Severely Disabled (Committee) operates pursuant to statutory and regulatory requirements. The Committee regulation at 41 CFR part 51–2–4 states that for a commodity or service to be suitable for addition to the Procurement List each of the following criteria must be reviewed and determined satisfactory under Committee practice and procedure: employment potential; nonprofit agency qualifications, capability, and level of impact on the current contractor for the commodity or service. The Javits-Wagner-O'Day (JWOD) Act requires that projects added to the Procurement List must be provided by qualified nonprofit agencies that employ people who are blind or severely disabled for not less than 75% of the direct hours required for the production or provision of products or services during each fiscal year.

Comments were received from the 3 contractors that supply these types of products to the Government. Each contractor indicates that loss of the sales of these or similar products would constitute severe adverse impact on their company. However, following Committee procedures, each contractor submitted financial information requested by the Committee in order to determine the impact of adding these products to the Procurement List. Upon review and consideration of the financial data submitted by the contractors, it is determined that, under Committee procedures, the addition of these products will not constitute severe adverse impact. Accordingly, the Committee has decided to add these products to the Procurement List.

Services

Service Type/Location: Custodial Service, Fort Jackson, SC.

NPA: SC Vocations & Individual Advancement, Inc., Greenville, SC.

Contracting Activity: Dept of the Army, W6QM Ft Jackson DOC, Fort Jackson, SC.

Service Type/Locations: Custodial Service:
USDA Forest Service, Chippewa National Forest Supervisor's Office, 200 Ash Avenue, Cass Lake, MN.
USDA Forest Service, Blackduck Ranger District, 417 Forestry Drive, Blackduck, MN.

NPA: Occupational Development Center, Inc., Thief River Falls, MN.

Contracting Activity: Dept of Agriculture, Forest Service, Chippewa National Forest, Cass Lake, MN.

Service Type/Locations: Administrative Services:
HUD—Knoxville Field Office, 710 Locust Street, SW., Knoxville, TN.
HUD—Jackson Field Office, McCoy Federal Building, 100 W. Capitol Street, Jackson, MS.

NPA: Tommy Nobis Enterprises, Inc., Marietta, GA.

Contracting Activity: Dept of Housing and Urban Development, Chicago Regional Office, RCO, Chicago, IL.

Service Type/Location: Custodial Service, Puget Sound Navy Museum, 251 First Avenue, Bremerton, WA.

NPA: Skookum Educational Programs,

Bremerton, WA.
Contracting Activity: Dept of the Navy, NAVFAC Northwest, Silverdale, WA.
Service Type/Location: Janitorial Service, Naval Operations Support Center (NOSC), Bldgs. 245 and 247, 5609 Randall Ave., Cheyenne, WY.
NPA: Skils'kin, Spokane, WA.
Contracting Activity: Dept of the Navy, NAVFAC Northwest, Silverdale, WA.

Patricia Briscoe,

Deputy Director, Business Operations, Pricing and Information Management.

[FR Doc. 2011–21922 Filed 8–25–11; 8:45 am]

BILLING CODE 6353–01–P

COMMITTEE FOR PURCHASE FROM PEOPLE WHO ARE BLIND OR SEVERELY DISABLED

Procurement List; Proposed Additions

AGENCY: Committee for Purchase From People Who Are Blind or Severely Disabled.

ACTION: Proposed Additions to the Procurement List.

SUMMARY: The Committee is proposing to add services to the Procurement List that will be provided by nonprofit agencies employing persons who are blind or have other severe disabilities.

Comments must be Received On or Before: 9/26/2011.

ADDRESSES: Committee for Purchase From People Who Are Blind or Severely Disabled, Jefferson Plaza 2, Suite 10800, 1421 Jefferson Davis Highway, Arlington, Virginia 22202–3259.

For Further Information or To Submit Comments Contact: Patricia Briscoe, Telephone: (703) 603–7740, Fax: (703) 603–0655, or e-mail *CMTEFedReg@AbilityOne.gov.*

SUPPLEMENTARY INFORMATION: This notice is published pursuant to 41 U.S.C. 47(a)(2) and 41 CFR 51–2.3. Its purpose is to provide interested persons an opportunity to submit comments on the proposed actions.

Additions

If the Committee approves the proposed additions, the entities of the Federal Government identified in this notice will be required to procure the services listed below from nonprofit agencies employing persons who are blind or have other severe disabilities.

Regulatory Flexibility Act Certification

I certify that the following action will not have a significant impact on a substantial number of small entities. The major factors considered for this certification were:

1. If approved, the action will not result in any additional reporting, recordkeeping or other compliance requirements for small entities other than the small organizations that will provide the services to the Government.

2. If approved, the action will result in authorizing small entities to provide the services to the Government.

3. There are no known regulatory alternatives which would accomplish the objectives of the Javits-Wagner-O'Day Act (41 U.S.C. 46–48c) in connection with the services proposed for addition to the Procurement List.

Comments on this certification are invited. Commenters should identify the statement(s) underlying the certification on which they are providing additional information.

End of Certification

The following services are proposed for addition to Procurement List for production by the nonprofit agencies listed:

Services

Service Type/Locations: Document Destruction Service.
NPA: NISH (Prime Contractor).
Contracting Activity: Dept. of the Treasury/Internal Revenue Service, Washington, DC.

I.R.S. Offices at the Following Locations

2403 Folsom Street, Eau Claire, WI
425 State Street, La Crosse, WI
NPA (Subcontractor): AccessAbility, Inc., Minneapolis, MN.
FLETC Building 67, Glynco, GA
1131 Chapel Crossing Road, Bldg 67, Brunswick, GA
NPA (Subcontractor): Austin Task, Inc., Austin, TX.
53 North Sixth Street, New Bedford, MA
75 Perseverance Way, Hyannis, MA
One Montvale Ave., Stoneham, MA
NPA (Subcontractor): CranstonArc, Cranston, RI.
1550 Main Street, Springfield, MA
NPA (Subcontractor): Easter Seals Capital Region & Eastern Connecticut, Inc., Windsor, CT.
4309 Jacksboro Highway, Wichita Falls, TX
Third & Pine Streets, Abilene, TX
8404 Esters Blvd, Irving, TX
NPA (Subcontractor): Expanco, Inc., Fort Worth, TX.
14479 S. John Humphrey Drive, Orland Park, IL
NPA (Subcontractor): Glenkirk, Northbrook, IL.
2426 Lee Hwy-Preston SQ, Bristol, VA
NPA (Subcontractor): Goodwill Industries—Knoxville, Inc., Knoxville, TN.
10208 Park Plaza, Suite C, Rothschild, WI
NPA (Subcontractor): Goodwill Industries of Southeastern Wisconsin, Inc., Milwaukee, WI.
1810 Hale Ave, Harlingen, TX
NPA (Subcontractor): Goodwill Industries of South Texas, Inc., Corpus Christi, TX.
1099 Alakea Street, Honolulu, HI
NPA (Subcontractor): Goodwill Contract Services of Hawaii, Inc., Honolulu, HI.
210 Walnut Street, Des Moines, IA
4300 Westown Parkway, West Des Moines, IA
425 Second Street, SE., Cedar Rapids, IA
NPA (Subcontractor): Harrison County Sheltered Workshop Association, Bethany, MO.
7657 Levin Road, Suite L–20, Silverdale, WA
NPA (Subcontractor): Northwest Center, Seattle, WA.
1004 North Big Spring, Midland, TX
NPA (Subcontractor): ReadyOne Industries, Inc., El Paso, TX.
100 Dey Place, Edison, NJ
165 Passaic Avenue, Fairfield, NJ
4 Paragon Way, STE #2, Freehold, NJ
111 Wood Ave, South, Iselin, NJ
30 Montgomery Street, Jersey City, NJ
200 Sheffield Street, Mountainside, NJ
20 Washington Place, Newark, NJ
1 Newark Center, Newark, NJ
1 Kalisa Way, Paramus, NJ
1719 C Route 10, Parsippany, NJ
200 Federal Plaza, Paterson, NJ
955 Springfield Ave, Springfield, NJ
107 Charles Lindbergh Blv, Garden City, NY
1180 Vets Mem Hwy, Hauppauge, NY
50 Clinton St., Hempstead, NY
290 BWY—Foley Square, New York, NY
2283 Third Avenue, New York, NY
33 Maiden Lane, New York, NY
1200 Waters Place, New York—Bronx, NY
1 Lefrak City Plaza, New York—Queens, NY
445 Forrest Ave., New York—Richmond, NY
10 Richmond Terrace, New York—Richmond, NY
10 Metrotech Center, New York—Kings, NY
518A East Main Street, Riverhead, NY
240 W Nyack Road/250, West Nyack, NY
1600 Stewart Ave., Westbury, NY
210 East Post Road, White Plains, NY
NPA (Subcontractor): NYSARC, Inc., NYC Chapter, New York, NY.
300 Pearl Street, Buffalo, NY
130 South Elmwood Avenue, Buffalo, NY
Appletree Business Park, Cheektowaga, NY
201 Como Park Blvd., Cheektowaga, NY
E 3rd & Pendergast, Jamestown, NY
250 Corp. Pl-255 East Ave, Rochester, NY
100 South Clinton Street, Syracuse, NY
615 Erie Blvd. West, Syracuse, NY
10 Broad Street, Rm 130, Utica, NY
1314 Griswald Plaza, Erie, PA
7th & State Street, Erie, PA
NPA (Subcontractor): Lifetime Assistance, Inc., Rochester, NY.
57 Haddonfield Road, Cherry Hill, NJ
5218 Atlantic Avenue, Mays Landing, NJ
44 South Clinton Ave., 3rd Fl, Trenton, NJ
3 W. Broad Street, Bethlehem, PA
200 Lakeside Drive, Suite 220, Horsham, PA
601 S. Henderson Road, King of Prussia, PA
1720 Hempstead Rd Bldg 144, Lancaster, PA
1400 North Providence Rd, Media, PA
600 Arch Street, Philadelphia, PA
701 Market Street, Philadelphia, PA
1601 Market Street, Philadelphia, PA
11620 Caroline Road, Philadelphia, PA
9815 B Roosevelt Blvd., Philadelphia, PA
201 Penn Street, Reading, PA
2801 Eastern Blvd, York, PA
2970 Market Street, Philadelphia, PA
NPA (Subcontractor): Opportunity Center, Incorporated, Wilmington, DE.
1250 Edwin Miller Blvd., Martinsburg, WV
150 Court St, Charleston, WV

420 Riffe St., Sophia, WV
1206 Quarrier St, Charleston, WV
845 Fifth Avenue, Huntington, WV
55 Meridian Parkway, Martinsburg, WV
1021 National Road, Wheeling, WV
NPA (Subcontractor): PACE Enterprises of West Virginia, Inc., Star City, WV.
210 1st Street, SW., Roanoke, VA
1600 N. Coalter Street, Staunton, VA
NPA (Subcontractor): Southside Training Employment Placement Services, Inc., Farmville, VA.
Service Type/Location: Grounds Maintenance, Air Force Research Laboratory Stockbridge Test Facility, 5251 Burleson Road, Oneida, NY.
NPA: Human Technologies Corporation, Utica, NY.
Contracting Activity: Dept. of the Air Force, FA8751 AFRL RIKO, Rome, NY.

Patricia Briscoe,

Deputy Director, Business Operations, Pricing and Information Management.

[FR Doc. 2011–21923 Filed 8–25–11; 8:45 am]

BILLING CODE 6353–01–P

CORPORATION FOR NATIONAL AND COMMUNITY SERVICE

Information Collection; Submission for OMB Review, Comment Request

AGENCY: Corporation for National and Community Service.

ACTION: Notice.

SUMMARY: The Corporation for National and Community Service (hereinafter the ''Corporation''), has submitted a public information collection request (ICR) entitled the Application Instructions Training and Technical Assistance Cooperative Agreements form to the Office of Management and Budget (OMB) for review and approval in accordance with the Paperwork Reduction Act of 1995, Public Law 104–13, (44 U.S.C. Chapter 35). Copies of this ICR, with applicable supporting documentation, may be obtained by calling the Corporation for National and Community Service, Ralph Morales at (202) 606–6829 Individuals who use a telecommunications device for the deaf (TTY–TDD) may call (202) 565–2799 between 8:30 a.m. and 5:00 p.m. eastern time, Monday through Friday.

ADDRESSES: Comments may be submitted, identified by the title of the information collection activity, to the Office of Information and Regulatory Affairs, Attn: Ms. Sharon Mar, OMB Desk Officer for the Corporation for National and Community Service, by any of the following two methods within 30 days from the date of publication in this **Federal Register**:

(1) By fax to: (202) 395–6974, Attention: Ms. Sharon Mar, OMB Desk Officer for the Corporation for National and Community Service; and

(2) Electronically by e-mail to: *smar@omb.eop.gov.*

SUPPLEMENTARY INFORMATION: The OMB is particularly interested in comments which:

- Evaluate whether the proposed collection of information is necessary for the proper performance of the functions of the Corporation, including whether the information will have practical utility;
- Evaluate the accuracy of the agency's estimate of the burden of the proposed collection of information, including the validity of the methodology and assumptions used;
- Propose ways to enhance the quality, utility, and clarity of the information to be collected; and
- Propose ways to minimize the burden of the collection of information on those who are to respond, including through the use of appropriate automated, electronic, mechanical, or other technological collection techniques or other forms of information technology, e.g., permitting electronic submissions of responses.

Comments

A 60-day public comment Notice was published in the **Federal Register** on April 25, 2011. This comment period ended May 24, 2011. No public comments were received from this notice.

Description: The Corporation is seeking approval of the Application Instructions Training and Technical Assistance Cooperative Agreements. The Application Instructions will be used by potential applicants to apply for funding to provide training and technical assistance to Corporation grantees and subgrantees. Applications will be reviewed by the Corporation and providers selected through a rigorous review process.

The Application Instructions for Training and Technical Assistance Cooperative Agreements provides the submission and compliance requirements, application requirements and selection criteria of potential applicants interested in providing training and technical assistance to Corporation grantees and subgrantees. The instructions also provide the Corporation's reporting requirements of successful applicants.

Type of Review: New Information Collection.

Agency: Corporation for National and Community Service.

Title: Application Instructions Training and Technical Assistance Cooperative Agreements.

OMB Number: 3045–0105.

Agency Number: None.

Affected Public: First-time grantees or current grantees re-competing for funding.

Total Respondents: 56.

Frequency: One (1) time.

Average Time per Response: 11.75 hours. Estimated at 16.5 hours for first time respondents; 7 hours for current providers.

Estimated Total Burden Hours: 658 hours.

Total Burden Cost (capital/startup): None.

Total Burden Cost (operating/maintenance): None.

Dated: August 23, 2011.

Gretchen Van der Veer,

Director, Leadership Development and Training.

[FR Doc. 2011–21944 Filed 8–25–11; 8:45 am]

BILLING CODE 6050–$$–P

DEPARTMENT OF DEFENSE

Office of the Secretary

[Docket ID: DOD–2011–OS–0097]

Privacy Act of 1974; Systems of Records

AGENCY: Defense Logistics Agency, Department of Defense (DoD).

ACTION: Notice to Delete a System of Records.

SUMMARY: The Defense Logistics Agency proposes to delete a system of records notice in its existing inventory of records systems subject to the Privacy Act of 1974, (5 U.S.C. 552a), as amended.

DATES: This proposed action will be effective without further notice on September 26, 2011 unless comments are received which result in a contrary determination.

ADDRESSES: You may submit comments, identified by docket number and title, by any of the following methods:

* *Federal Rulemaking Portal: http://www.regulations.gov.* Follow the instructions for submitting comments.

* *Mail:* Federal Docket Management System Office, 4800 Mark Center Drive, Suite 02G09, Alexandria, VA 22350–3100.

Instructions: All submissions received must include the agency name and docket number for this **Federal Register** document. The general policy for comments and other submissions from members of the public is of make these submissions available for public viewing on the Internet at *http://www.regulations.gov* as they are

received without change, including any personal identifiers or contact information.

FOR FURTHER INFORMATION CONTACT: Jody Sinkler, Chief Privacy and FOIA Officer, Headquarters Defense Logistics Agency, ATTN: DGA, 8725 John J. Kingman Road, Suite 1644, Fort Belvoir, VA 22060–6221, or by phone at (703) 767–5045.

SUPPLEMENTARY INFORMATION: The Defense Logistics Agency systems of records notices subject to the Privacy Act of 1974, (5 U.S.C. 552a), as amended, have been published in the **Federal Register** and are available from the address in **FOR FURTHER INFORMATION CONTACT**.

The specific changes to the record system being amended are set forth below followed by the notice, as amended, published in its entirety. The proposed amendment is not within the purview of subsection (r) of the Privacy Act of 1974 (5 U.S.C. 552a), as amended, which requires the submission of new or altered systems reports.

Dated: August 22, 2011.

Aaron Siegel,

Alternate OSD Federal Register Liaison Officer, Department of Defense.

Proposed Deletion Notice for S810.50 DLA–P

S810.50 DLA–P

SYSTEM NAME:

Contracting Officer Files (February 22, 1993, 58 FR 10854).

REASON:

Records are covered by existing Office of Personnel Management (OPM) government-wide Privacy Act systems of records. OPM has government-wide responsibility for various systems of records maintained on Federal civilian employees.

[FR Doc. 2011–21846 Filed 8–25–11; 8:45 am]

BILLING CODE 5001–06–P

DEPARTMENT OF DEFENSE

Department of the Air Force

[Docket ID: USAF–2011–0021]

Privacy Act of 1974; System of Records

AGENCY: Department of the Air Force, DoD.

ACTION: Notice to Add a System of Records.

SUMMARY: The Department of the Air Force proposes to add a system of records to its inventory of record systems subject to the Privacy Act of 1974 (5 U.S.C. 552a), as amended.

DATES: The proposed action will be effective on September 26, 2011 unless comments are received that would result in a contrary determination.

ADDRESSES: You may submit comments, identified by docket number and title, by any of the following methods:

* *Federal Rulemaking Portal: http://www.regulations.gov.*

Follow the instructions for submitting comments.

* *Mail:* Federal Docket Management System Office, 4800 Mark Center Drive, Suite 02G09, Alexandria, VA 22350–3100.

Instructions: All submissions received must include the agency name and docket number for this **Federal Register** document. The general policy for comments and other submissions from members of the public is to make these submissions available for public viewing on the Internet at *http://www.regulations.gov* as they are received without change, including any personal identifiers or contact information.

FOR FURTHER INFORMATION CONTACT: Mr. Charles J. Shedrick, Department of the Air Force Privacy Office, Air Force Privacy Act Office, Office of Warfighting Integration and Chief Information Officer, ATTN: SAF/XCPPI, 1800 Air Force Pentagon, Washington, DC 20330–1800, or by phone at 703–696–6488.

SUPPLEMENTARY INFORMATION: The Department of the Air Force systems of records notices subject to the Privacy Act of 1974 (U.S.C. 552a), as amended, have been published in the **Federal Register** and are available from the address in **FOR FURTHER INFORMATION CONTACT**.

The proposed system report, as required by 5 U.S.C. 552a(r) of the Privacy Act of 1974, as amended, was submitted on August 22, 2011, to the House Committee on Oversight and Government Reform, the Senate Committee on Homeland Security and Governmental Affairs, and the Office of Management and Budget (OMB) pursuant to paragraph 4c of Appendix I to OMB Circular No. A–130, 'Federal Agency Responsibilities for Maintaining Records About Individuals', dated February 8, 1996 (February 20, 1996, 61 FR 6427).

Dated: August 22, 2011.

Aaron Siegel,

Alternate OSD Federal Register Liaison Officer, Department of Defense.

F084 AFHRA A

SYSTEM NAME:

Air Force Historical Research Agency Records.

SYSTEM LOCATION:

Air Force Historical Research Agency, 600 Chennault Circle, Maxwell AFB, AL 36112–6424.

CATEGORIES OF INDIVIDUALS COVERED BY THE SYSTEM:

Any person who applies to use the services offered by the Air Force Historical Research Agency.

CATEGORIES OF RECORDS IN THE SYSTEM:

Name, signatures, personal contact information, individual's employer and institutional, organizational, or service affiliation; the nature of the individual's visit (official or unofficial); information concerning an applicant's security clearance; and a listing of research materials the individual requested. A notification of the requested and type of identification the visitor presented will be maintained.

AUTHORITY FOR MAINTENANCE OF THE SYSTEM:

10 U.S.C. Subtitle D, Air Force; Air Force Instruction 84–101, Historical Products, Services, and Requirements; Air Force Instruction 84–105, Organizational Lineage, Honors and Heraldry; and Air Force Mission Directive 30, Air Force Historical Research Agency.

PURPOSES:

The purpose of this system of records is to collect, validate eligibility, and maintain an official registry file that identifies individuals who apply for, and are granted, access to the Air Force Historical Research Agency (AFHRA) services; maintain control of Agency records and establish researcher accountability; enable future contact with researchers; register students in courses conducted by the AFHRA; and to facilitate the preparation of statistical and other aggregate reports on researcher use of the Agency records.

ROUTINE USES OF RECORDS MAINTAINED IN THE SYSTEM, INCLUDING CATEGORIES OF USERS AND THE PURPOSES OF SUCH USES:

The DoD 'Blanket Routine Uses' published at the beginning of the Air Force's compilation of systems of records notices apply to this system.

POLICIES AND PRACTICES FOR STORING, RETRIEVING, ACCESSING, RETAINING, AND DISPOSING OF RECORDS IN THE SYSTEM:

STORAGE:

Paper records and electronic storage media.

RETRIEVABILITY:

By individual's name.

SAFEGUARDS:

Paper and electronic records are maintained within secured buildings in areas accessible only to persons having official need to know, and who are properly trained and screened. In addition, the electronic system is controlled with passwords, and Common Access Card (CAC) governing access to data.

RETENTION AND DISPOSAL:

Delete information in the database when no longer needed. Electronic records are destroyed by erasing, deleting, or overwriting. When paper records are no longer needed, they are destroyed by shredding, rendering it impossible to recover meaningful information from the resulting residue.

SYSTEM MANAGER(S) AND ADDRESS:

Air Force Historical Research Agency Records Manager, 600 Chennault Circle, Maxwell AFB, Alabama 36112–6424.

NOTIFICATION PROCEDURE:

Individuals seeking to determine whether information about themselves is contained in this system should address written inquiries to Air Force Historical Research Agency Records Manager, 600 Chennault Circle, Maxwell AFB, Alabama 36112–6424.

For verification purposes, individual should provide their full name, any details which may assist in locating records, and their signature. In addition, the requester must provide a notarized statement or an unsworn declaration made in accordance with 28 U.S.C. 1746, in the following format:

If executed outside the United States:

'I declare (or certify, verify, or state) under penalty of perjury under the laws of the United States of America that the foregoing is true and correct. Executed on (date). (Signature)'.

If executed within the United States, its territories, possessions, or commonwealths: 'I declare (or certify, verify, or state) under penalty of perjury that the foregoing is true and correct. Executed on (date). (Signature)'.

RECORD ACCESS PROCEDURES:

Individuals seeking access to information about themselves contained in this system should address written inquiries to Air Force Historical Research Agency Records Manager, 600 Chennault Circle, Maxwell AFB, Alabama 36112–6424.

For verification purposes, individual should provide their full name, any details which may assist in locating records, and their signature. In addition, the requester must provide a notarized statement or an unsworn declaration made in accordance with 28 U.S.C. 1746, in the following format:

If executed outside the United States:

'I declare (or certify, verify, or state) under penalty of perjury under the laws of the United States of America that the foregoing is true and correct. Executed on (date). (Signature)'.

If executed within the United States, its territories, possessions, or commonwealths: 'I declare (or certify, verify, or state) under penalty of perjury that the foregoing is true and correct. Executed on (date). (Signature)'.

CONTESTING RECORD PROCEDURES:

The Air Force's rules for accessing records, and for contesting contents and appealing initial agency determinations are contained in Secretary of the Air Force Instruction 33–332; 32 CFR part 806; or may be obtained from the system manager. Denial to amend records in this system can be made only by the Director, Air Force History and Museums Policies and Programs.

RECORD SOURCE CATEGORIES:

From information provided by applicants.

EXEMPTIONS CLAIMED FOR THE SYSTEM:

None.

[FR Doc. 2011–21845 Filed 8–25–11; 8:45 am]

BILLING CODE 5001–06–P

DEPARTMENT OF DEFENSE

Department of the Army; Corps of Engineers

Notice of Availability of the Record of Decision on the Final Programmatic Environmental Impact Statement for the Mechanical and Artificial Creation and Maintenance of Emergent Sandbar Habitat in the Riverine Segments of the Upper Missouri River, Missouri River Basin, United States

AGENCY: Department of the Army, U.S. Army Corps of Engineers, DoD.

ACTION: Notice of availability.

SUMMARY: The District Commander of the Omaha District U.S. Army Corps of Engineers (Corps) has reviewed the ''Final Programmatic Environmental Impact Statement (PEIS) for the Mechanical and Artificial Creation and Maintenance of Emergent Sandbar Habitat (ESH) on the Riverine Segments of the Upper Missouri River'' and has made the decision to proceed with the implementation of an Adaptive Management Implementation Process (AMIP) (preferred alternative) with a construction ceiling of acres associated with Alternative 3.5. Specific details of the decision are captured in the Record of Decision (ROD) for this action. The ROD explains that the Corps will create and maintain ESH acres in the Fort Peck, Garrison, Fort Randall and Gavins Point River Segments, and the Lewis and Clark Lake Segment for the benefit of the Interior Population of the least tern (least tern) and the northern Great Plains piping plover (piping plover). The maximum potential acres of ESH to be created is approximately 4,370 acres total, with the following estimated maximum acres by reach:

- Fort Peck River, 565.
- Garrison River, 1,327.
- Fort Randall River, 212.
- Lewis & Clark Lake, 354.
- Gavins Point River, 1,913.

The AMIP alternative best supports the needs of the birds while providing flexibility in program implementation that will help minimize environmental impacts as well as costs.

ADDRESSES: Questions or comments on the ROD should be sent to: Department of the Army; Corps of Engineers, Omaha District; CENWO–PM–AC; ATTN: Emergent Sandbar Habitat Programmatic EIS; 1616 Capitol Avenue; Omaha, NE 68102–4901, or e-mailed to: *Cynthia.s.upah@usace.army.mil.*

FOR FURTHER INFORMATION CONTACT: Ms. Cynthia Upah, Project Manager, by telephone: (402) 995–2672, by mail: 1616 Capitol Avenue, Omaha, NE 68102–4901, or by e-mail: *Cynthia.s.upah@usace.army.mil.* For inquires from the media, please contact the USACE Omaha District Public Affairs Officer (PAO), Ms. Monique Farmer by telephone: (402) 995–2416, by mail: 1616 Capitol Avenue, Omaha, NE 68102, or by e-mail: *Monique.l.farmer@usace.army.mil.*

SUPPLEMENTARY INFORMATION:

1. Background. The ESH program resulted from a Biological Opinion (BiOp) issued by the U.S. Fish and Wildlife Service (USFWS) in which the Reasonable and Prudent Alternative (RPA) IV(b)3 called for the Corps to provide sufficient ESH acreage in order to meet biological metrics (fledge ratios) to avoid jeopardizing continued existence of the least tern and piping plover, as defined by the Endangered Species Act (ESA). The Final PEIS provides National Environmental Policy

Act (NEPA) coverage for the proposed action.

The ROD discusses each alternative considered for the proposed action and those that are environmentally preferable. The Corps has identified an Adaptive Management Implementation Process (AMIP), with a construction ceiling of Alternative 3.5 (approximately 4,370 acres), as the selected plan. The key aspect of the AMIP is that, rather than selecting a specific acreage alternative, actions would be progressively implemented and monitored until the desired biological response of terns and plovers is attained and sustained. The Corps recognizes that alternative methods such as vegetation removal, while relatively untested, provide the potential to decrease impacts and costs, and could be incorporated if proven successful.

The FPEIS describes the potential environmental consequences of the alternatives considered in detail. During analysis, impacts of the larger alternatives (3, 2 and 1) were deemed to be moderate to high and impacts of lesser alternatives (3.5, 4 and 5) were deemed to be moderate to low. Alternative 3.5 represents a midrange of habitat available at a time when the birds were productive, and it is anticipated that biological metrics will be met before fully implementing up to Alternative 3.5. If Alternative 3.5 is fully implemented and biological metrics are not met, the Corps can consider continuing to higher acreage alternatives or other methodologies, in which case appropriate coordination and disclosure would be pursued (potential amended ROD or additional NEPA).

The AMIP allows for flexibility to provide habitat up to a point of meeting population goals, and to minimize impacts through approaches such as monitoring, redistributing acreage targets among segments if needed, avoiding sensitive resources, using less-impactful or costly construction methodologies as they become available, and avoiding over-construction of habitat.

Implementing the selected alternative will provide the most effective means for the Corps to meet its obligations, including avoiding jeopardy to the bird species, while managing the river for all authorized purposes. Risk of significant impacts to the environment appears to be low to moderate as a result of implementation of the ESH program, and numerous acres of ESH would be created, which is considered important not only to protected bird species, but to the overall ecology of the Missouri River.

Concurrently with the ROD, an errata sheet is also being made available, which provides the comments received on the Final PEIS along with the Corps response to each. Also included in the errata is an update regarding Tribal coordination and the PEIS.

2. Document Availability. The Final PEIS (May 2011), the ROD, the errata sheet, and an updated Final PEIS which incorporates the ROD and the errata items (August 2011), are available at: *http://www.moriverrecovery.org/mrrp/f?p=MRRP:documents*.

For more information about the Emergent Sandbar Habitat program, please visit *http://www.moriverrecovery.org* under ''BiOp/Mit Efforts.''

Dated: August 15, 2011.

Christopher D. Wiehl,

Acting Chief, Planning Branch, Omaha District.

[FR Doc. 2011–21894 Filed 8–25–11; 8:45 am]

BILLING CODE 3720–58–P

DEPARTMENT OF DEFENSE

Department of the Army; Corps of Engineers

Notice of Intent To Prepare an Environmental Impact Statement/Environmental Impact Report for the Section 408 Permission for the Southport Sacramento River Early Implementation Project, West Sacramento, CA

AGENCY: Department of the Army, U.S. Army Corps of Engineers; DoD.

ACTION: Notice of intent.

SUMMARY: Pursuant to the National Environmental Policy Act of 1969, as amended, and the California Environmental Quality Act (CEQA), the U.S. Army Corps of Engineers (USACE) intends to prepare an Environmental Impact Statement/Environmental Impact Report (EIS/EIR) under Section 14 of the Rivers and Harbors Act of 1899 (as amended) (33 U.S.C. 408), and Section 404 of the Clean Water Act (33 U.S.C. 1344), for the proposed Southport Sacramento River Early Implementation Project (EIP), sponsored by the West Sacramento Area Flood Control Agency (WSAFCA). Figures of the project area can be viewed at *http://www.cityofwestsacramento.org/city/flood.*

WSAFCA is planning the Southport Sacramento River EIP to implement flood-risk reduction measures along the Sacramento River South Levee in the City of West Sacramento, Yolo County, CA. The project reach extends along the right bank of the Sacramento River south of the barge canal, downstream approximately 6.4 miles to the South Cross Levee, protecting the Southport community of West Sacramento. The 3.3-square mile study area encompasses the area of levee improvement along the river corridor and the potential soil borrow sites. In order to implement the project, the sponsor must acquire permission from USACE to alter the Federal project under Section 14 of the Rivers and Harbors Act of 1899 (as amended) (33 U.S.C. 408 or, Section 408). USACE also has authority under Section 404 of the Clean Water Act (33 U.S.C. 1344) over activities involving the discharge of dredged or fill material to waters of the United States, which are known to be in the project area. The project would bring the levee up to standard with Federal and state flood protection criteria, as well as providing opportunities for ecosystem restoration and public recreation. USACE, acting as the federal lead agency under NEPA, and WSAFCA, acting as the state lead agency under the CEQA in coordination with the Central Valley Flood Protection Board, have determined that an EIS/EIR should be prepared to describe alternatives, potential environmental effects, and mitigation measures.

DATES: Public scoping meetings will be held on Thursday, September 15, 2011 at 3:30 p.m. and 6:30 p.m. at the West Sacramento Recreation Center, 2801 Jefferson Boulevard, West Sacramento, CA. Send written comments by September 26, 2011 (see **ADDRESSES**).

ADDRESSES: Written comments and suggestions concerning the scope and content of the environmental information may be submitted to Mr. John Suazo, U.S. Army Corps of Engineers, Sacramento District, Attn: Planning Division (CESPK–PD–R), 1325 J Street, Sacramento, CA 95814. Requests to be placed on the mailing list also should be sent to this address.

FOR FURTHER INFORMATION CONTACT: Questions about the proposed actions and environmental review process should be addressed to John Suazo at (916) 557–6719, e-mail: *john.suazo@usace.army.mil* (see **ADDRESSES**).

SUPPLEMENTARY INFORMATION:

1. Proposed Action. WSAFCA is proposing a project along the Sacramento River west levee under the California DWR's Early Implementation Program to expeditiously complete flood-risk reduction measures. Known as the Southport Sacramento River EIP, the project proposes implementation of flood-risk reduction measures

(measures) along a 6.4-mile long reach between the barge canal downstream to the South Cross Levee. Primary deficiencies of the levee include through-seepage, under-seepage, and embankment instability (e.g., overly steepened slopes). As part of the project, an EIS/EIR is being prepared. USACE has authority under Section 14 of the Rivers and Harbors Act of 1899 (as amended) (33 U.S.C. 408), over alterations to federal flood control project levees and any such alterations as proposed by WSAFCA are subject to approval by USACE. USACE also has authority under Section 404 of the Clean Water Act (33 U.S.C. 1344) over activities involving the discharge of dredged or fill material to waters of the United States, which are known to be in the project area. Under Section 10 of the Rives and Harbors Act, the District Engineer may permit activities which do not affect navigable waters. Due to these authorities, USACE is acting as the lead agency for the EIS pursuant to NEPA. WSAFCA will be acting as the lead agency for the EIR according to CEQA as the public agency that has the principal responsibility for carrying out and approving the project.

2. Alternatives. The EIS/EIR will consider several alternatives for reducing flood damage. Each alternative analyzed during the investigation will consist of a combination of several measures to reduce the risk of flooding. These measures include, but are not limited to, installing slurry cutoff walls, constructing seepage or stability berms, relief wells, rock slope protection, slope flattening, and potential new levee alignments (setback or adjacent levees).

3. Scoping Process.

a. Public scoping meetings will be held on September 15, 2011, to present information to the public and to receive comments from the public on the project. These meetings are intended to initiate the process to involve concerned individuals, and local, State, and Federal agencies.

b. Significant issues to be analyzed in depth in the environmental documents include effects on hydraulics, wetlands and other waters of the U.S., vegetation and wildlife resources, special-status species, aesthetics, cultural resources, recreation, land use, fisheries, agricultural resources, water quality, air quality, transportation, and socioeconomics; and cumulative effects of related projects in the study area.

c. USACE is consulting with the State Historic Preservation Officer to comply with the National Historic Preservation Act and with the U.S. Fish and Wildlife Service and National Marine Fisheries Service to comply with the Endangered Species Act. USACE also is coordinating with the U.S. Fish and Wildlife Service to comply with the Fish and Wildlife Coordination Act.

d. A 45-day public review period will be provided for individuals and agencies to review and comment on the draft environmental document. All interested parties are encouraged to respond to this notice and provide a current address if they wish to be notified of the draft EIS/EIR circulation.

4. Availability. The draft EIS/EIR for the Southport Sacramento River EIP is scheduled to be available for public review and comment in mid-2012.

Dated: August 17, 2011.

William J. Leady,

COL, EN, Commanding.

[FR Doc. 2011–21878 Filed 8–25–11; 8:45 am]

BILLING CODE 3720–58–P

DEPARTMENT OF DEFENSE

Department of the Army; Corps of Engineers

Intent To Prepare a Draft Supplemental Environmental Impact Statement for the Larose to Golden Meadow Hurricane Protection Project, Post-Authorization Change Study, in Lafourche Parish, LA

AGENCY: Department of the Army, U.S. Army Corps of Engineers, DoD.

ACTION: Notice of intent.

SUMMARY: The U.S. Army Corps of Engineers (USACE) intends to prepare a supplemental environmental impact statement (SEIS) for the Larose to Golden Meadow Hurricane Protection Project, Post-Authorization Change (PAC) Study. This project was originally authorized in 1965. Construction began in 1972 and is still underway. The PAC Study was initiated to identify and evaluate modifications needed to ensure that completion of project features, designed and constructed before development of the post-Katrina Hurricane and Storm Damage Risk Reduction System (HSDRRS) Design Guidelines, are in compliance with these new guidelines.

The subject SEIS will supplement the original environmental impact statement (EIS) prepared for the project as authorized in 1965. The Statement of Findings for the original EIS was signed on April 4, 1975. An SEIS was subsequently prepared to address proposed modifications to the authorized plan. The Record of Decision for this first SEIS was signed on May 20, 1985.

FOR FURTHER INFORMATION CONTACT: Questions concerning the draft SEIS should be addressed to Charlene Carmack, Rock Island District, Corps of Engineers, CEMVP–PD–C, Clock Tower Building, P.O. Box 2004, Rock Island, IL 61204–2004; telephone (309) 794–5570; fax (309) 794–5157; or be e-mail: *Charlene.Carmack@usace.army.mil.*

SUPPLEMENTARY INFORMATION:

1. *Authority.* This SEIS will be the second supplement to the EIS originally prepared for the Larose to Golden Meadow Hurricane Protection Project. This project was authorized by the Flood Control Act of 27 October 1965, House Document No. 184, 89th Congress (Pub. L. 89–298), which authorized the project ''hurricane-flood protection at Grand Isle and Vicinity, Louisiana'' to provide protection in accordance with the recommendation of the Chief of Engineers in his report entitled ''Grand Isle and Vicinity, La.'', and contained in House Document No. 184, Eighty-ninth Congress, 1st Session. The authorized project is a ring levee system with associated control structures that provides hurricane and storm damage risk reduction to communities located along both sides of Bayou Lafourche in Lafourche Parish, Louisiana. The overall levee system is approximately 43 miles long, extending from Larose to a point 2 miles south of Golden Meadow, Louisiana. Roughly 25,000 people live in the communities of Larose, Galliano, Cutoff, and Golden Meadow, which are located within the ring levee system.

2. *Alternatives.* Alternatives currently being evaluated in the PAC Study include: (1) Stabilize the existing levee using current criteria for still-water elevations, which would complete the project without exceeding the 1965 authorized elevation listed in the Grand Isle, Louisiana, and Vicinity General Design Memorandum (with datum adjustments), and meet the current approved design guidelines excluding the Post-Hurricane Katrina hydrology and hydraulics design guidelines; (2) modify the 1965 design to complete the project providing a level of risk reduction based on the 1965 storm surge design elevations (with datum adjustments) using the current HSDRRS Design Guidelines to include the Post-Hurricane Katrina surge models; (3) complete the existing levee system in general conformance with the previously authorized design. These alternatives will be further formulated and developed during the scoping process and an appropriate range of alternatives will be considered in the new SEIS. These may include

alternatives that are in addition to those listed herein.

3. *Public Involvement.* Public involvement, an essential part of the SEIS process, is integral to assessing the environmental consequences of the proposed action and improving the quality of the environmental decisionmaking. The public includes affected and interested Federal, State, and local agencies, Indian Tribes, concerned citizens, stakeholders, and other interested parties. Public participation in the SEIS process will be strongly encouraged, both formally and informally, to enhance the probability of a more technically accurate, economically feasible, and socially and politically acceptable SEIS. Public involvement will include but is not limited to: information dissemination; identification of problems, needs and opportunities; idea generation; public education; problem solving; providing feedback on proposals; evaluation of alternatives; conflict resolution by consensus; public and scoping notices and meetings; public, stakeholder and advisory groups consultation and meetings; and making the SEIS and supporting information readily available in conveniently located places, such as libraries and on the world wide Web.

4. *Scoping.* Scoping, an early and open process for identifying the scope of significant issues related to the proposed action and alternatives to be addressed in the SEIS, will be used to: (a) Identify the affected public and agency concerns; (b) facilitate an efficient SEIS preparation process; (c) define the issues and alternatives that will be examined in detail in the SEIS; and (d) save time in the overall process by helping to ensure that the draft SEIS adequately addresses relevant issues. The USACE anticipates conducting a public scoping meeting for this SEIS in October 2011. The exact date, time, and location of this meeting, which will be held in the general project area, have not yet been determined. This information will be publicized once the meeting arrangements have been made.

5. *Coordination.* The USACE and the U.S. Fish and Wildlife Service (USFWS) have formally committed to work together to conserve, protect, and restore fish and wildlife resources while ensuring environmental sustainability of our Nation's water resources under the January 22, 2003, Partnership Agreement for Water Resources and Fish and Wildlife. The USFWS will provide a Fish and Wildlife Coordination Act Report. Coordination will be maintained with the USFWS and the National Marine Fisheries Service (NMFS) regarding threatened and endangered species under their respective jurisdictional responsibilities. Coordination will be maintained with the NMFS regarding essential fish habitat. Coordination will be maintained with the U.S. Coast Guard (USCG) regarding navigation issues. In addition, USFWS, NMFS, USCG and the U.S. Geological Survey will be invited to be cooperating agencies. Coordination will be maintained with the Natural Resources Conservation Service regarding prime and unique farmlands. The U.S. Department of Agriculture will be consulted regarding the ''Swampbuster'' provisions of the Food Security Act. Coordination will be maintained with the U.S. Environmental Protection Agency concerning compliance with Executive Order 12898, ''Federal Action to Address Environmental Justice in Minority Populations and Low-Income Populations.'' Coordination will be maintained with the Advisory Council on Historic Preservation and the State Historic Preservation Officer. The Federal Aviation Administration will be consulted regarding potential impacts to local airports. The Louisiana Department of Natural Resources will be consulted regarding consistency with the Coastal Zone Management Act. The Louisiana Department of Environmental Quality will be consulted concerning potential impacts to water quality. The Louisiana Department of Wildlife and Fisheries will be consulted concerning potential impacts to Natural and Scenic Rivers and to fish and wildlife resources.

5. *Availability of Draft SEIS.* The earliest that the draft SEIS will be available for public review would be in the fall of 2012. The draft SEIS or a notice of availability will be distributed to affected Federal, State, and local agencies, Indian Tribes, and other interested parties.

Dated: August 11, 2011.

Edward R. Fleming,

Colonel, U.S. Army District Commander.

[FR Doc. 2011–21881 Filed 8–25–11; 8:45 am]

BILLING CODE 3720–58–P

DEPARTMENT OF EDUCATION

Submission for OMB Review; Comment Request

AGENCY: Department of Education.

ACTION: Correction notice.

SUMMARY: On August 19, 2011, the Department of Education published a 60-day public comment period notice in the **Federal Register** (Page 51960, Column 1) for the information collection, ''Consolidated State Performance Report''. The title should be corrected to read ''Consolidated State Application''. The total estimated number of responses should read 30 responses. The total estimated number of burden hours should read 2,400 hours. All other information is correct and up to date. The Director, Information Collection Clearance Division, Privacy, Information and Records Management Services, Office of Management, hereby issues a correction notice as required by the Paperwork Reduction Act of 1995.

Dated: August 23, 2011.

Darrin A. King,

Director, Information Collection Clearance Division, Privacy, Information and Records Management Services, Office of Management.

[FR Doc. 2011–21929 Filed 8–25–11; 8:45 am]

BILLING CODE 4000–01–P

DEPARTMENT OF ENERGY

Federal Energy Regulatory Commission

[Docket No. CP11–532–000]

Pivotal LNG, Inc.; Notice of Application

Take notice that on August 8, 2011, Pivotal LNG, Inc. (Pivotal), Ten Peachtree Place, Suite 1000, Atlanta, Georgia 30309, filed with the Federal Energy Regulatory Commission (Commission) an application under section 7(c) of the Natural Gas Act (NGA) and Parts 157 and 284 of the regulations of the FERC, requesting: (i) To the extent necessary, a limited jurisdiction blanket transportation certificate for the purpose of authorizing incidental transportation of natural gas as a by-product of the operation of non-jurisdictional liquefied natural gas (LNG) liquefaction and storage facility in support of its LNG vehicular and other end-use fuel business; (ii) a waiver of all regulatory, accounting, and reporting requirements applicable to natural gas companies under the NGA and Natural Gas Policy Act, and (iii) expedited consideration and action by the Commission as the requested approvals are a condition to closing on the proposed acquisition by Pivotal of the LNG facility, all as more fully described in the application. This filing is available for review at the Commission in the Public Reference Room or may be viewed on the Commission's Web site at *http://www.ferc.gov* using the ''eLibrary'' link. Enter the docket number excluding the last three digits in the docket number

field to access the document. For assistance, please contact FERC Online Support at *FERCOnlineSupport@ferc.gov* or toll free at (866) 208–3676, or for TTY, contact (202) 502–8659.

Any Questions regarding this application should be directed to Shannon Omia Pierce, AGL Resources Inc., Ten Peachtree Place, Suite 1000, Atlanta, Georgia 30309 or by e-mailing *spierce@aglresources.com*, or to Lisanne Crowley, Troutman Sanders LLP, 401 Ninth Street, NW., Suite 1000, Washington, DC 20004 or by e-mailing *lisanne.crowley@troutmansanders.com*.

Pursuant to section 157.9 of the Commission's rules, 18 CFR 157.9, within 90 days of this Notice the Commission staff will either: Complete its environmental assessment (EA) and place it into the Commission's public record (eLibrary) for this proceeding; or issue a Notice of Schedule for Environmental Review. If a Notice of Schedule for Environmental Review is issued, it will indicate, among other milestones, the anticipated date for the Commission staff's issuance of the final environmental impact statement (FEIS) or EA for this proposal. The filing of the EA in the Commission's public record for this proceeding or the issuance of a Notice of Schedule for Environmental Review will serve to notify Federal and state agencies of the timing for the completion of all necessary reviews, and the subsequent need to complete all Federal authorizations within 90 days of the date of issuance of the Commission staff's FEIS or EA.

There are two ways to become involved in the Commission's review of this project. First, any person wishing to obtain legal status by becoming a party to the proceedings for this project should, on or before the comment date stated below, file with the Federal Energy Regulatory Commission, 888 First Street, NE., Washington, DC 20426, a motion to intervene in accordance with the requirements of the Commission's Rules of Practice and Procedure (18 CFR 385.214 or 385.211) and the Regulations under the NGA (18 CFR 157.10). A person obtaining party status will be placed on the service list maintained by the Secretary of the Commission and will receive copies of all documents filed by the applicant and by all other parties. A party must submit 7 copies of filings made with the Commission and must mail a copy to the applicant and to every other party in the proceeding. Only parties to the proceeding can ask for court review of Commission orders in the proceeding.

However, a person does not have to intervene in order to have comments considered. The second way to participate is by filing with the Secretary of the Commission, as soon as possible, an original and two copies of comments in support of or in opposition to this project. The Commission will consider these comments in determining the appropriate action to be taken, but the filing of a comment alone will not serve to make the filer a party to the proceeding. The Commission's rules require that persons filing comments in opposition to the project provide copies of their protests only to the party or parties directly involved in the protest.

Persons who wish to comment only on the environmental review of this project should submit an original and two copies of their comments to the Secretary of the Commission. Environmental commentors will be placed on the Commission's environmental mailing list, will receive copies of the environmental documents, and will be notified of meetings associated with the Commission's environmental review process. Environmental commentors will not be required to serve copies of filed documents on all other parties. However, the non-party commentors will not receive copies of all documents filed by other parties or issued by the Commission (except for the mailing of environmental documents issued by the Commission) and will not have the right to seek court review of the Commission's final order.

The Commission strongly encourages electronic filings of comments, protests and interventions in lieu of paper using the ''eFiling'' link at *http://www.ferc.gov.* Persons unable to file electronically should submit an original and seven copies of the protest or intervention to the Federal Energy regulatory Commission, 888 First Street, NE., Washington, DC 20426.

Comment Date: September 8, 2011.

Dated: August 18, 2011.

Kimberly D. Bose,

Secretary.

[FR Doc. 2011–21791 Filed 8–25–11; 8:45 am]

BILLING CODE 6717–01–P

DEPARTMENT OF ENERGY

Federal Energy Regulatory Commission

[Docket No. PR11–123–000]

Moss Bluff Hub, LLC; Notice of Baseline Filing

Take notice that on August 17, 2011, Moss Bluff Hub, LLC submitted a revised Statement of Operating Conditions, that governs storage and interruptible hub services under Section 311 of the Natural Gas Policy Act of 1978 (NGPA), to reflect the addition of Big Sandy Pipeline, LLC to the list of entities whose service agreements constitute a Valid Service Agreement.

Any person desiring to participate in this rate proceeding must file a motion to intervene or to protest this filing must file in accordance with Rules 211 and 214 of the Commission's Rules of Practice and Procedure (18 CFR 385.211 and 385.214). Protests will be considered by the Commission in determining the appropriate action to be taken, but will not serve to make protestants parties to the proceeding. Any person wishing to become a party must file a notice of intervention or motion to intervene, as appropriate. Such notices, motions, or protests must be filed on or before the date as indicated below. Anyone filing an intervention or protest must serve a copy of that document on the Applicant. Anyone filing an intervention or protest on or before the intervention or protest date need not serve motions to intervene or protests on persons other than the Applicant.

The Commission encourages electronic submission of protests and interventions in lieu of paper using the ''eFiling'' link at *http://www.ferc.gov.* Persons unable to file electronically should submit an original and 7 copies of the protest or intervention to the Federal Energy Regulatory Commission, 888 First Street, NE., Washington, DC 20426.

This filing is accessible on-line at *http://www.ferc.gov,* using the ''eLibrary'' link and is available for review in the Commission's Public Reference Room in Washington, DC. There is an ''eSubscription'' link on the Web site that enables subscribers to receive e-mail notification when a document is added to a subscribed docket(s). For assistance with any FERC Online service, please e-mail *FERCOnlineSupport@ferc.gov,* or call (866) 208–3676 (toll free). For TTY, call (202) 502–8659.

Comment Date: 5 p.m. Eastern Time on Monday August 29, 2011.

Dated: August 18, 2011.

Kimberly D. Bose,

Secretary.

[FR Doc. 2011–21800 Filed 8–25–11; 8:45 am]

BILLING CODE 6717–01–P

DEPARTMENT OF ENERGY

Federal Energy Regulatory Commission

[Project No. 12845–003; Project No. 14092–000]

Free Flow Power Corporation; Northland Power Mississippi River LLC; Notice of Competing Preliminary Permit Applications Accepted for Filing and Soliciting Comments, Motions To Intervene, and Competing Applications

On January 11, 2011, Free Flow Power Corporation (Free Flow) and Northland Power Mississippi River LLC (Northland) filed preliminary permit applications, pursuant to section 4(f) of the Federal Power Act, proposing to study the feasibility of developing hydropower projects hydropower on the Mississippi River, near the town of Killona, in St. Charles Parish, Louisiana. The sole purpose of a preliminary permit, if issued, is to grant the permit holder priority to file a license application during the permit term. A preliminary permit does not authorize the permit holder to perform any land-disturbing activities or otherwise enter upon lands or waters owned by others without the owners' express permission.

The proposed projects are described as follows:

Free Flow's hydrokinetic Project, Project No. 12845–003 would consist of: (1) Up to 1,200 SmartTurbine generating units installed in arrays on the bottom of the river; (2) the total capacity of the installation would be up to 48,000 kilowatts; (3) flexible cables would convey each arrays power to a metering station; and (4) a transmission line would interconnect with the power grid. The proposed project would have an average annual generation of 109,162,800 kilowatt-hours (kWh), which would be sold to a local utility.

Northland's hydrokinetic Project, Project No. 14092–000 would consist of: (1) Up to 180 TREK generating units installed in a matrix on the bottom of the river; (2) the total capacity of the installation would be up to 45,000 kilowatts; (3) shielded underwater cables would convey each matrix power to a substation; and (4) a transmission line would interconnect with the power grid. The proposed project would have an average annual generation of 394,000,000 kWh, which would be sold to a local utility.

Applicants Contact: For Free Flow: Ramya Swaminathan, Free Flow Power Corporation, 239 Causeway Street, Boston, MA 02114; phone (978) 283–2822. For Northland: Tim Richardson, 30 St. Clair Avenue West, 17th Floor, Toronto, Ontario, Canada; phone (416) 820–9521.

FERC Contact: Michael Spencer, (202) 502–6093.

Deadline for filing comments, motions to intervene, competing applications (without notices of intent), or notices of intent to file competing applications: 60 days from the issuance of this notice. Competing applications and notices of intent must meet the requirements of 18 CFR 4.36. Comments, motions to intervene, notices of intent, and competing applications may be filed electronically via the Internet. See 18 CFR 385.2001(a)(1)(iii) and the instructions on the Commission's Web site (*http://www.ferc.gov/docs-filing/ferconline.asp*) under the ''eFiling'' link. For a simpler method of submitting text-only comments, click on ''Quick Comment.'' For assistance, please contact FERC Online Support at *FERCOnlineSupport@ferc.gov;* call toll-free at (866) 208–3676; or, for TTY, contact (202) 502–8659. Although the Commission strongly encourages electronic filing, documents may also be paper-filed. To paper-file, mail an original and eight copies to: Kimberly D. Bose, Secretary, Federal Energy Regulatory Commission, 888 First Street, NE., Washington, DC 20426.

More information about this project, including a copy of the application, can be viewed or printed on the ''eLibrary'' link of the Commission's Web site at *http://www.ferc.gov/docs-filing/elibrary.asp.* Enter the docket number (P–12845–003, or P–14092–000) in the docket number field to access the document. For assistance, contact FERC Online Support.

Dated: August 18, 2011.

Kimberly D. Bose,

Secretary.

[FR Doc. 2011–21796 Filed 8–25–11; 8:45 am]

BILLING CODE 6717–01–P

DEPARTMENT OF ENERGY

Federal Energy Regulatory Commission

[Project No. 12863–002; Project No. 14074–000]

Free Flow Power Corporation; Northland Power Mississippi River LLC; Notice of Competing Preliminary Permit Applications Accepted for Filing and Soliciting Comments, Motions To Intervene, and Competing Applications

Free Flow Power Corporation (Free Flow) and Northland Power Mississippi River LLC (Northland) filed preliminary permit applications, pursuant to section 4(f) of the Federal Power Act, proposing to study the feasibility of developing hydropower projects hydropower on the Mississippi River, near the town of Donaldsonville, in Ascension Parish, Louisiana. Both applications were filed electronically and given the filing date of February 1, 2011, at 8:30 a.m. The sole purpose of a preliminary permit, if issued, is to grant the permit holder priority to file a license application during the permit term. A preliminary permit does not authorize the permit holder to perform any land-disturbing activities or otherwise enter upon lands or waters owned by others without the owners' express permission.

The proposed projects are described as follows:

Free Flow's hydrokinetic Project, Project No. 12863–002 would consist of: (1) Up to 2,250 SmartTurbine generating units installed in arrays on the bottom of the river; (2) the total capacity of the installation would be up to 90,000 kilowatts; (3) flexible cables would convey each arrays power to a metering station; and (4) a transmission line would interconnect with the power grid. The proposed project would have an average annual generation of 197,100,000 kilowatt-hours (kWh), which would be sold to a local utility.

Northland's hydrokinetic Project, Project No. 14074–000 would consist of: (1) Up to 376 TREK generating units installed in a matrix on the bottom of the river; (2) the total capacity of the installation would be up to 94,000 kilowatts; (3) shielded underwater cables would convey each matrix power to a substation; and (4) a transmission line would interconnect with the power grid. The proposed project would have an average annual generation of 823,000,000 kWh, which would be sold to a local utility.

Applicants Contact: For Free Flow: Ramya Swaminathan, Free Flow Power Corporation, 239 Causeway Street, Boston, MA 02114; phone (978) 283–2822. For Northland: Tim Richardson, 30 St. Clair Avenue West, 17th Floor, Toronto, Ontario, Canada; phone (416) 820–9521.

FERC Contact: Michael Spencer, (202) 502–6093.

Deadline for filing comments, motions to intervene, competing applications (without notices of intent), or notices of intent to file competing applications: 60 days from the issuance of this notice. Competing applications and notices of intent must meet the requirements of 18 CFR 4.36. Comments, motions to intervene, notices of intent, and competing applications may be filed electronically via the Internet. See 18 CFR 385.2001(a)(1)(iii) and the instructions on the Commission's Web site (*http://www.ferc.gov/docs-filing/ferconline.asp*) under the ''eFiling'' link. For a simpler method of submitting text-only comments, click on ''Quick Comment.'' For assistance, please contact FERC Online Support at *FERCOnlineSupport@ferc.gov;* call toll-free at (866) 208–3676; or, for TTY, contact (202) 502–8659. Although the Commission strongly encourages

electronic filing, documents may also be paper-filed. To paper-file, mail an original and eight copies to: Kimberly D. Bose, Secretary, Federal Energy Regulatory Commission, 888 First Street, NE., Washington, DC 20426.

More information about this project, including a copy of the application, can be viewed or printed on the ''eLibrary'' link of the Commission's Web site at *http://www.ferc.gov/docs-filing/elibrary.asp.* Enter the docket number (P–12863–002, or P–14074–000) in the docket number field to access the document. For assistance, contact FERC Online Support.

Dated: August 19, 2011.

Kimberly D. Bose,

Secretary.

[FR Doc. 2011–21815 Filed 8–25–11; 8:45 am]

BILLING CODE 6717–01–P

DEPARTMENT OF ENERGY

Federal Energy Regulatory Commission

[Project No. 12924–002; Project No. 14077–000]

Free Flow Power Corporation; Northland Power Mississippi River LLC; Notice of Competing Preliminary Permit Applications Accepted for Filing and Soliciting Comments, Motions To Intervene, and Competing Applications

Free Flow Power Corporation (Free Flow) and Northland Power Mississippi River LLC (Northland) filed preliminary permit applications, pursuant to section 4(f) of the Federal Power Act, proposing to study the feasibility of developing hydropower projects hydropower on the Mississippi River, in Warren County, Mississippi, and Tensas and Madison Parishes, Louisiana. Both applications were filed electronically and given the filing date of February 1, 2011, at 8:30 a.m. The sole purpose of a preliminary permit, if issued, is to grant the permit holder priority to file a license application during the permit term. A preliminary permit does not authorize the permit holder to perform any land-disturbing activities or otherwise enter upon lands or waters owned by others without the owners' express permission.

The proposed projects are described as follows:

Free Flow's hydrokinetic Project, Project No. 12924–002 would consist of: (1) Up to 2,250 SmartTurbine generating units installed in arrays on the bottom of the river; (2) the total capacity of the installation would be up to 90,000 kilowatts; (3) flexible cables would convey each array's power to a metering station; and (4) a transmission line would interconnect with the power grid. The proposed project would have an average annual generation of 197,100,000 kilowatt-hours (kWh), which would be sold to a local utility.

Northland's hydrokinetic Project, Project No. 14077–000 would consist of: (1) Up to 677 TREK generating units installed in a matrix on the bottom of the river; (2) the total capacity of the installation would be up to 169,000 kilowatts; (3) shielded underwater cables would convey each matrix power to a substation; and (4) a transmission line would interconnect with the power grid. The proposed project would have an average annual generation of 1,482,000,000 kWh, which would be sold to a local utility.

Applicants Contact: For Free Flow: Ramya Swaminathan, Free Flow Power Corporation, 239 Causeway Street, Boston, MA 02114; phone (978) 283–2822. For Northland: Tim Richardson, 30 St. Clair Avenue West, 17th Floor, Toronto, Ontario, Canada; phone (416) 820–9521.

FERC Contact: Michael Spencer, (202) 502–6093.

Deadline for filing comments, motions to intervene, competing applications (without notices of intent), or notices of intent to file competing applications: 60 days from the issuance of this notice. Competing applications and notices of intent must meet the requirements of 18 CFR 4.36. Comments, motions to intervene, notices of intent, and competing applications may be filed electronically via the Internet. See 18 CFR 385.2001(a)(1)(iii) and the instructions on the Commission's Web site (*http://www.ferc.gov/docs-filing/ferconline.asp*) under the ''eFiling'' link. For a simpler method of submitting text-only comments, click on ''Quick Comment.'' For assistance, please contact FERC Online Support at *FERCOnlineSupport@ferc.gov;* call toll-free at (866) 208–3676; or, for TTY, contact (202) 502–8659. Although the Commission strongly encourages electronic filing, documents may also be paper-filed. To paper-file, mail an original and eight copies to: Kimberly D. Bose, Secretary, Federal Energy Regulatory Commission, 888 First Street, NE., Washington, DC 20426.

More information about this project, including a copy of the application, can be viewed or printed on the ''eLibrary'' link of the Commission's Web site at *http://www.ferc.gov/docs-filing/elibrary.asp.* Enter the docket number (P–12924–002, or P–14077–000) in the docket number field to access the document. For assistance, contact FERC Online Support.

Dated: August 19, 2011.

Kimberly D. Bose,

Secretary.

[FR Doc. 2011–21819 Filed 8–25–11; 8:45 am]

BILLING CODE 6717–01–P

DEPARTMENT OF ENERGY

Federal Energy Regulatory Commission

[Project No. 12817–002; Project No. 14083–000]

Free Flow Power Corporation; Northland Power Mississippi River LLC; Notice of Competing Preliminary Permit Applications Accepted for Filing and Soliciting Comments, Motions To Intervene, and Competing Applications

Free Flow Power Corporation (Free Flow) and Northland Power Mississippi River LLC (Northland) filed preliminary permit applications, pursuant to section 4(f) of the Federal Power Act, proposing to study the feasibility of developing hydropower projects hydropower on the Mississippi River, in West Baton Rouge and East Baton Rouge Parishes, Louisiana. Both applications were filed electronically and given the filing date of February 1, 2011, at 8:30 a.m. The sole purpose of a preliminary permit, if issued, is to grant the permit holder priority to file a license application during the permit term. A preliminary permit does not authorize the permit holder to perform any land-disturbing activities or otherwise enter upon lands or waters owned by others without the owners' express permission.

The proposed projects are described as follows:

Free Flow's hydrokinetic Project, Project No. 12817–002 would consist of: (1) Up to 2,250 SmartTurbine generating units installed in arrays on the bottom of the river; (2) the total capacity of the installation would be up to 90,000 kilowatts; (3) flexible cables would convey each arrays power to a metering station; and (4) a transmission line would interconnect with the power grid. The proposed project would have an average annual generation of 197,100,000 kilowatt-hours (kWh), which would be sold to a local utility.

Northland's hydrokinetic Project, Project No. 14083–000 would consist of: (1) Up to 301 TREK generating units installed in a matrix on the bottom of the river; (2) the total capacity of the installation would be up to 75,000 kilowatts; (3) shielded underwater cables would convey each matrix power to a substation; and (4) a transmission line would interconnect with the power grid. The proposed project would have an average annual generation of 659,000,000 kWh, which would be sold to a local utility.

Applicants Contact: For Free Flow: Ramya Swaminathan, Free Flow Power Corporation, 239 Causeway Street, Boston, MA 02114; phone (978) 283–2822. For Northland: Tim Richardson, 30 St. Clair Avenue West, 17th Floor, Toronto, Ontario, Canada; phone (416) 820–9521.

FERC Contact: Michael Spencer, (202) 502–6093.

Deadline for filing comments, motions to intervene, competing applications (without notices of intent), or notices of intent to file competing applications: 60 days from the issuance of this notice. Competing applications and notices of intent must meet the requirements of 18 CFR 4.36. Comments, motions to intervene, notices of intent, and competing applications may be filed electronically via the Internet. See 18 CFR 385.2001(a)(1)(iii) and the instructions on the Commission's Web site (*http://www.ferc.gov/docs-filing/ferconline.asp*) under the ''eFiling'' link. For a simpler method of submitting text-only comments, click on ''Quick Comment.'' For assistance, please contact FERC Online Support at *FERCOnlineSupport@ferc.gov;* call toll-free at (866) 208–3676; or, for TTY, contact (202) 502–8659. Although the Commission strongly encourages electronic filing, documents may also be paper-filed. To paper-file, mail an original and eight copies to: Kimberly D. Bose, Secretary, Federal Energy Regulatory Commission, 888 First Street, NE., Washington, DC 20426.

More information about this project, including a copy of the application, can be viewed or printed on the ''eLibrary'' link of the Commission's Web site at *http://www.ferc.gov/docs-filing/elibrary.asp.* Enter the docket number (P–12817–002, or P–14083–000) in the docket number field to access the document. For assistance, contact FERC Online Support.

Dated: August 19, 2011.

Kimberly D. Bose,

Secretary.

[FR Doc. 2011–21823 Filed 8–25–11; 8:45 am]

BILLING CODE 6717–01–P

DEPARTMENT OF ENERGY

Federal Energy Regulatory Commission

[Project No. 12927–002; Project No. 14075–000]

Free Flow Power Corporation; Northland Power Mississippi River LLC; Notice of Competing Preliminary Permit Applications Accepted for Filing and Soliciting Comments, Motions To Intervene, and Competing Applications

Free Flow Power Corporation (Free Flow) and Northland Power Mississippi River LLC (Northland) filed preliminary permit applications, pursuant to section 4(f) of the Federal Power Act, proposing to study the feasibility of developing hydropower projects hydropower on the Mississippi River, in West Feliciana and Pointe Coupee Parishes, Louisiana. Both applications were filed electronically and given the filing date of February 1, 2011, at 8:30 a.m. The sole purpose of a preliminary permit, if issued, is to grant the permit holder priority to file a license application during the permit term. A preliminary permit does not authorize the permit holder to perform any land-disturbing activities or otherwise enter upon lands or waters owned by others without the owners' express permission.

The proposed projects are described as follows:

Free Flow's hydrokinetic Project, Project No. 12927–002 would consist of: (1) Up to 2,250 SmartTurbine generating units installed in arrays on the bottom of the river; (2) the total capacity of the installation would be up to 90,000 kilowatts; (3) flexible cables would convey each array's power to a metering station; and (4) a transmission line would interconnect with the power grid. The proposed project would have an average annual generation of 197,100,000 kilowatt-hours (kWh), which would be sold to a local utility.

Northland's hydrokinetic Project, Project No. 14075–000 would consist of: (1) Up to 677 TREK generating units installed in a matrix on the bottom of the river; (2) the total capacity of the installation would be up to 169,000 kilowatts; (3) shielded underwater cables would convey each matrix power to a substation; and (4) a transmission line would interconnect with the power grid. The proposed project would have an average annual generation of 1,482,000,000 kWh, which would be sold to a local utility.

Applicants Contact: For Free Flow: Ramya Swaminathan, Free Flow Power Corporation, 239 Causeway Street, Boston, MA 02114; phone (978) 283–2822. For Northland: Tim Richardson, 30 St. Clair Avenue West, 17th Floor, Toronto, Ontario, Canada; phone (416) 820–9521.

FERC Contact: Michael Spencer, (202) 502–6093.

Deadline for filing comments, motions to intervene, competing applications (without notices of intent), or notices of intent to file competing applications: 60 days from the issuance of this notice. Competing applications and notices of intent must meet the requirements of 18 CFR 4.36. Comments, motions to intervene, notices of intent, and competing applications may be filed electronically via the Internet. See 18 CFR 385.2001(a)(1)(iii) and the instructions on the Commission's Web site (*http://www.ferc.gov/docs-filing/ferconline.asp*) under the ''eFiling'' link. For a simpler method of submitting text-only comments, click on ''Quick Comment.'' For assistance, please contact FERC Online Support at *FERCOnlineSupport@ferc.gov;* call toll-free at (866) 208–3676; or, for TTY, contact (202) 502–8659. Although the Commission strongly encourages electronic filing, documents may also be paper-filed. To paper-file, mail an original and eight copies to: Kimberly D. Bose, Secretary, Federal Energy Regulatory Commission, 888 First Street, NE., Washington, DC 20426.

More information about this project, including a copy of the application, can be viewed or printed on the ''eLibrary'' link of the Commission's Web site at *http://www.ferc.gov/docs-filing/elibrary.asp.* Enter the docket number (P–12927–002, or P–14075–000) in the docket number field to access the document. For assistance, contact FERC Online Support.

Dated: August 19, 2011.

Kimberly D. Bose,

Secretary.

[FR Doc. 2011–21821 Filed 8–25–11; 8:45 am]

BILLING CODE 6717–01–P

DEPARTMENT OF ENERGY

Federal Energy Regulatory Commission

[Project No. 12925–002; Project No. 14078–000]

Free Flow Power Corporation; Northland Power Mississippi River LLC; Notice of Competing Preliminary Permit Applications Accepted for Filing and Soliciting Comments, Motions To Intervene, and Competing Applications

Free Flow Power Corporation (Free Flow) and Northland Power Mississippi River LLC (Northland) filed preliminary permit applications, pursuant to section 4(f) of the Federal Power Act, proposing to study the feasibility of developing hydropower projects hydropower on the Mississippi River, in Bolivar County, Mississippi, and Desha County, Arkansas. Both applications were filed electronically and given the filing date of February 1, 2011, at 8:30 a.m. The sole purpose of a preliminary permit, if issued, is to grant the permit holder priority to file a license application during the permit term. A preliminary permit does not authorize the permit holder to perform any land-disturbing activities or otherwise enter upon lands or waters owned by others without the owners' express permission.

The proposed projects are described as follows:

Free Flow's hydrokinetic Project, Project No. 12925–002 would consist of: (1) Up to 2,250 SmartTurbine generating units installed in arrays on the bottom of the river; (2) the total capacity of the installation would be up to 90,000 kilowatts; (3) flexible cables

would convey each array's power to a metering station; and (4) a transmission line would interconnect with the power grid. The proposed project would have an average annual generation of 197,100,000 kilowatt-hours (kWh), which would be sold to a local utility.

Northland's hydrokinetic Project, Project No. 14078–000 would consist of: (1) Up to 602 TREK generating units installed in a matrix on the bottom of the river; (2) the total capacity of the installation would be up to 150,000 kilowatts; (3) shielded underwater cables would convey each matrix power to a substation; and (4) a transmission line would interconnect with the power grid. The proposed project would have an average annual generation of 1,318,000,000 kWh, which would be sold to a local utility.

Applicants Contact: For Free Flow: Ramya Swaminathan, Free Flow Power Corporation, 239 Causeway Street, Boston, MA 02114; phone (978) 283–2822. For Northland: Tim Richardson, 30 St. Clair Avenue West, 17th Floor, Toronto, Ontario, Canada; phone (416) 820–9521.

FERC Contact: Michael Spencer, (202) 502–6093.

Deadline for filing comments, motions to intervene, competing applications (without notices of intent), or notices of intent to file competing applications: 60 days from the issuance of this notice. Competing applications and notices of intent must meet the requirements of 18 CFR 4.36. Comments, motions to intervene, notices of intent, and competing applications may be filed electronically via the Internet. See 18 CFR 385.2001(a)(1)(iii) and the instructions on the Commission's Web site (*http://www.ferc.gov/docs-filing/ferconline.asp*) under the ''eFiling'' link. For a simpler method of submitting text-only comments, click on ''Quick Comment.'' For assistance, please contact FERC Online Support at *FERCOnlineSupport@ferc.gov;* call toll-free at (866) 208–3676; or, for TTY, contact (202) 502–8659. Although the Commission strongly encourages electronic filing, documents may also be paper-filed. To paper-file, mail an original and eight copies to: Kimberly D. Bose, Secretary, Federal Energy Regulatory Commission, 888 First Street, NE., Washington, DC 20426.

More information about this project, including a copy of the application, can be viewed or printed on the ''eLibrary'' link of the Commission's Web site at *http://www.ferc.gov/docs-filing/elibrary.asp.* Enter the docket number (P–12925–002, or P–14078–000) in the docket number field to access the document. For assistance, contact FERC Online Support.

Dated: August 19, 2011.

Kimberly D. Bose,

Secretary.

[FR Doc. 2011–21820 Filed 8–25–11; 8:45 am]

BILLING CODE 6717–01–P

DEPARTMENT OF ENERGY

Federal Energy Regulatory Commission

[Project No. 12921–002; Project No. 14076–000]

Free Flow Power Corporation; Northland Power Mississippi River LLC; Notice of Competing Preliminary Permit Applications Accepted for Filing and Soliciting Comments, Motions To Intervene, and Competing Applications

Free Flow Power Corporation (Free Flow) and Northland Power Mississippi River LLC (Northland) filed preliminary permit applications, pursuant to section 4(f) of the Federal Power Act, proposing to study the feasibility of developing hydropower projects hydropower on the Mississippi River, in Tensas Parish, Louisiana, and Jefferson County, Mississippi. Both applications were filed electronically and given the filing date of February 1, 2011, at 8:30 a.m. The sole purpose of a preliminary permit, if issued, is to grant the permit holder priority to file a license application during the permit term. A preliminary permit does not authorize the permit holder to perform any land-disturbing activities or otherwise enter upon lands or waters owned by others without the owners' express permission.

The proposed projects are described as follows:

Free Flow's hydrokinetic Project, Project No. 12921–002 would consist of: (1) Up to 2,250 SmartTurbine generating units installed in arrays on the bottom of the river; (2) the total capacity of the installation would be up to 90,000 kilowatts; (3) flexible cables would convey each array's power to a metering station; and (4) a transmission line would interconnect with the power grid. The proposed project would have an average annual generation of 197,100,000 kilowatt-hours (kWh), which would be sold to a local utility.

Northland's hydrokinetic Project, Project No. 14076–000 would consist of: (1) Up to 376 TREK generating units installed in a matrix on the bottom of the river; (2) the total capacity of the installation would be up to 94,000 kilowatts; (3) shielded underwater cables would convey each matrix power to a substation; and (4) a transmission line would interconnect with the power grid. The proposed project would have an average annual generation of 823,000,000 kWh, which would be sold to a local utility.

Applicants Contact: For Free Flow: Ramya Swaminathan, Free Flow Power Corporation, 239 Causeway Street, Boston, MA 02114; phone (978) 283–2822. For Northland: Tim Richardson, 30 St. Clair Avenue West, 17th Floor, Toronto, Ontario, Canada; phone (416) 820–9521.

FERC Contact: Michael Spencer, (202) 502–6093.

Deadline for filing comments, motions to intervene, competing applications (without notices of intent), or notices of intent to file competing applications: 60 days from the issuance of this notice. Competing applications and notices of intent must meet the requirements of 18 CFR 4.36. Comments, motions to intervene, notices of intent, and competing applications may be filed electronically via the Internet. See 18 CFR 385.2001(a)(1)(iii) and the instructions on the Commission's Web site (*http://www.ferc.gov/docs-filing/ferconline.asp*) under the ''eFiling'' link. For a simpler method of submitting text-only comments, click on ''Quick Comment.'' For assistance, please contact FERC Online Support at *FERCOnlineSupport@ferc.gov;* call toll-free at (866) 208–3676; or, for TTY, contact (202) 502–8659. Although the Commission strongly encourages electronic filing, documents may also be paper-filed. To paper-file, mail an original and eight copies to: Kimberly D. Bose, Secretary, Federal Energy Regulatory Commission, 888 First Street, NE., Washington, DC 20426.

More information about this project, including a copy of the application, can be viewed or printed on the ''eLibrary'' link of the Commission's Web site at *http://www.ferc.gov/docs-filing/elibrary.asp.* Enter the docket number (P–12921–002, or P–14076–000) in the docket number field to access the document. For assistance, contact FERC Online Support.

Dated: August 19, 2011.

Kimberly D. Bose,

Secretary.

[FR Doc. 2011–21818 Filed 8–25–11; 8:45 am]

BILLING CODE 6717–01–P

DEPARTMENT OF ENERGY

Federal Energy Regulatory Commission

[Project No. 12865–002; Project No. 14072–000]

Free Flow Power Corporation; Northland Power Mississippi River LLC; Notice of Competing Preliminary Permit Applications Accepted for Filing and Soliciting Comments, Motions To Intervene, and Competing Applications

Free Flow Power Corporation (Free Flow) and Northland Power Mississippi River LLC (Northland) filed preliminary permit applications, pursuant to section 4(f) of the Federal Power Act, proposing to study the feasibility of developing hydropower projects hydropower on the Mississippi River, near the town of North Vacherie, in St. James Parish, Louisiana. Both applications were filed electronically and given the filing date of February 1, 2011, at 8:30 a.m. The sole purpose of a preliminary permit, if issued, is to grant the permit holder priority to file a license application during the permit term. A preliminary permit does not authorize the permit holder to perform any land-disturbing activities or otherwise enter upon lands or waters owned by others without the owners' express permission.

The proposed projects are described as follows:

Free Flow's hydrokinetic Project, Project No. 12865–002 would consist of: (1) Up to 2,250 SmartTurbine generating units installed in arrays on the bottom of the river; (2) the total capacity of the installation would be up to 90,000 kilowatts; (3) flexible cables would convey each arrays power to a metering station; and (4) a transmission line would interconnect with the power grid. The proposed project would have an average annual generation of 197,100,000 kilowatt-hours (kWh), which would be sold to a local utility.

Northland's hydrokinetic Project, Project No. 14072–000 would consist of: (1) Up to 150 TREK generating units installed in a matrix on the bottom of the river; (2) the total capacity of the installation would be up to 38,000 kilowatts; (3) shielded underwater cables would convey each matrix power to a substation; and (4) a transmission line would interconnect with the power grid. The proposed project would have an average annual generation of 329,000,000 kWh, which would be sold to a local utility.

Applicants Contact: For Free Flow: Ramya Swaminathan, Free Flow Power Corporation, 239 Causeway Street, Boston, MA 02114; phone (978) 283–2822. For Northland: Tim Richardson, 30 St. Clair Avenue West 17th Floor, Toronto, Ontario, Canada; phone (416) 820–9521.

FERC Contact: Michael Spencer, (202) 502–6093.

Deadline for filing comments, motions to intervene, competing applications (without notices of intent), or notices of intent to file competing applications: 60 days from the issuance of this notice. Competing applications and notices of intent must meet the requirements of 18 CFR 4.36. Comments, motions to intervene, notices of intent, and competing applications may be filed electronically via the Internet. See 18 CFR 385.2001(a)(1)(iii) and the instructions on the Commission's Web site (*http://www.ferc.gov/docs-filing/ferconline.asp*) under the ''eFiling'' link. For a simpler method of submitting text-only comments, click on ''Quick Comment.'' For assistance, please contact FERC Online Support at *FERCOnlineSupport@ferc.gov;* call toll-free at (866) 208–3676; or, for TTY, contact (202) 502–8659. Although the Commission strongly encourages electronic filing, documents may also be paper-filed. To paper-file, mail an original and eight copies to: Kimberly D. Bose, Secretary, Federal Energy Regulatory Commission, 888 First Street, NE., Washington, DC 20426.

More information about this project, including a copy of the application, can be viewed or printed on the ''eLibrary'' link of the Commission's Web site at *http://www.ferc.gov/docs-filing/elibrary.asp.* Enter the docket number (P–12865–002, or P–14072–000) in the docket number field to access the document. For assistance, contact FERC Online Support.

Dated: August 19, 2011.

Kimberly D. Bose,

Secretary.

[FR Doc. 2011–21816 Filed 8–25–11; 8:45 am]

BILLING CODE 6717–01–P

DEPARTMENT OF ENERGY

Federal Energy Regulatory Commission

[Project No. 12857–002; Project No. 14073–000]

Free Flow Power Corporation; Northland Power Mississippi River LLC; Notice of Competing Preliminary Permit Applications Accepted for Filing and Soliciting Comments, Motions To Intervene, and Competing Applications

Free Flow Power Corporation (Free Flow) and Northland Power Mississippi River LLC (Northland) filed preliminary permit applications, pursuant to section 4(f) of the Federal Power Act, proposing to study the feasibility of developing hydropower projects hydropower on the Mississippi River, in St. James Parish, Louisiana. Both applications were filed electronically and given the filing date of February 1, 2011, at 8:30 a.m. The sole purpose of a preliminary permit, if issued, is to grant the permit holder priority to file a license application during the permit term. A preliminary permit does not authorize the permit holder to perform any land-disturbing activities or otherwise enter upon lands or waters owned by others without the owners' express permission.

The proposed projects are described as follows:

Free Flow's hydrokinetic Project, Project No. 12857–002 would consist of: (1) Up to 2,250 SmartTurbine generating units installed in arrays on the bottom of the river; (2) the total capacity of the installation would be up to 90,000 kilowatts; (3) flexible cables would convey each array's power to a metering station; and (4) a transmission line would interconnect with the power grid. The proposed project would have an average annual generation of 197,100,000 kilowatt-hours (kWh), which would be sold to a local utility.

Northland's hydrokinetic Project, Project No. 14073–000 would consist of: (1) Up to 150 TREK generating units installed in a matrix on the bottom of the river; (2) the total capacity of the installation would be up to 38,000 kilowatts; (3) shielded underwater cables would convey each matrix's power to a substation; and (4) a transmission line would interconnect with the power grid. The proposed project would have an average annual generation of 329,000,000 kWh, which would be sold to a local utility.

Applicants Contact: For Free Flow: Ramya Swaminathan, Free Flow Power Corporation, 239 Causeway Street, Boston, MA 02114; phone (978) 283–2822. For Northland: Tim Richardson, 30 St. Clair Avenue West 17th Floor, Toronto, Ontario, Canada; phone (416) 820–9521.

FERC Contact: Michael Spencer, (202) 502–6093.

Deadline for filing comments, motions to intervene, competing applications (without notices of intent), or notices of intent to file competing applications: 60 days from the issuance of this notice. Competing applications and notices of intent must meet the requirements of 18 CFR 4.36. Comments, motions to intervene, notices of intent, and competing applications may be filed electronically via the Internet. See 18 CFR 385.2001(a)(1)(iii) and the instructions on the Commission's Web site (*http://www.ferc.gov/docs-filing/ferconline.asp*) under the ''eFiling'' link. For a simpler method of submitting text-only comments, click on ''Quick Comment.'' For assistance, please contact FERC Online Support at *FERCOnlineSupport@ferc.gov;* call toll-free at (866) 208–3676; or, for TTY, contact (202) 502–8659. Although the

Commission strongly encourages electronic filing, documents may also be paper-filed. To paper-file, mail an original and eight copies to: Kimberly D. Bose, Secretary, Federal Energy Regulatory Commission, 888 First Street, NE., Washington, DC 20426.

More information about this project, including a copy of the application, can be viewed or printed on the ''eLibrary'' link of the Commission's Web site at *http://www.ferc.gov/docs-filing/elibrary.asp.* Enter the docket number (P–12857–002, or P–14073–000) in the docket number field to access the document. For assistance, contact FERC Online Support.

Dated: August 19, 2011.

Kimberly D. Bose,

Secretary.

[FR Doc. 2011–21814 Filed 8–25–11; 8:45 am]

BILLING CODE 6717–01–P

DEPARTMENT OF ENERGY

Federal Energy Regulatory Commission

[Project No. 12930–002; Project No. 14080–000]

Free Flow Power Corporation; Northland Power Mississippi River LLC; Notice of Competing Preliminary Permit Applications Accepted for Filing and Soliciting Comments, Motions To Intervene, and Competing Applications

Free Flow Power Corporation (Free Flow) and Northland Power Mississippi River LLC (Northland) filed preliminary permit applications, pursuant to section 4(f) of the Federal Power Act, proposing to study the feasibility of developing hydropower projects on the Mississippi River, in Tunica County, Mississippi, and Lee County, Arkansas. Both applications were filed electronically and given the filing date of February 1, 2011, at 8:30 a.m. The sole purpose of a preliminary permit, if issued, is to grant the permit holder priority to file a license application during the permit term. A preliminary permit does not authorize the permit holder to perform any land-disturbing activities or otherwise enter upon lands or waters owned by others without the owners' express permission.

The proposed projects are described as follows:

Free Flow's hydrokinetic Project, Project No. 12930–002 would consist of: (1) Up to 2,250 SmartTurbine generating units installed in arrays on the bottom of the river; (2) the total capacity of the installation would be up to 90,000 kilowatts; (3) flexible cables would convey each array's power to a metering station; and (4) a transmission line would interconnect with the power grid. The proposed project would have an average annual generation of 197,100,000 kilowatt-hours (kWh), which would be sold to a local utility.

Northland's hydrokinetic Project, Project No. 14080–000 would consist of: (1) Up to 1,053 TREK generating units installed in a matrix on the bottom of the river; (2) the total capacity of the installation would be up to 263,000 kilowatts; (3) shielded underwater cables would convey each matrix power to a substation; and (4) a transmission line would interconnect with the power grid. The proposed project would have an average annual generation of 2,305,000,000 kWh, which would be sold to a local utility.

Applicants Contact: For Free Flow: Ramya Swaminathan, Free Flow Power Corporation, 239 Causeway Street, Boston, MA 02114; phone (978) 283–2822. For Northland: Tim Richardson, 30 St. Clair Avenue West, 17th Floor, Toronto, Ontario, Canada; phone (416) 820–9521.

FERC Contact: Michael Spencer, (202) 502–6093.

Deadline for filing comments, motions to intervene, competing applications (without notices of intent), or notices of intent to file competing applications: 60 days from the issuance of this notice. Competing applications and notices of intent must meet the requirements of 18 CFR 4.36. Comments, motions to intervene, notices of intent, and competing applications may be filed electronically via the Internet. See 18 CFR 385.2001(a)(1)(iii) and the instructions on the Commission's Web site (*http://www.ferc.gov/docs-filing/ferconline.asp*) under the ''eFiling'' link. For a simpler method of submitting text-only comments, click on ''Quick Comment.'' For assistance, please contact FERC Online Support at *FERCOnlineSupport@ferc.gov;* call toll-free at (866) 208–3676; or, for TTY, contact (202) 502–8659. Although the Commission strongly encourages electronic filing, documents may also be paper-filed. To paper-file, mail an original and eight copies to: Kimberly D. Bose, Secretary, Federal Energy Regulatory Commission, 888 First Street, NE., Washington, DC 20426.

More information about this project, including a copy of the application, can be viewed or printed on the ''eLibrary'' link of the Commission's Web site at *http://www.ferc.gov/docs-filing/elibrary.asp.* Enter the docket number (P–12930–002, or P–14080–000) in the docket number field to access the document. For assistance, contact FERC Online Support.

Dated: August 19, 2011.

Kimberly D. Bose,

Secretary.

[FR Doc. 2011–21802 Filed 8–25–11; 8:45 am]

BILLING CODE 6717–01–P

DEPARTMENT OF ENERGY

Federal Energy Regulatory Commission

[Project No. 12843–003; Project No. 14099–000]

Free Flow Power Corporation; Northland Power Mississippi River LLC; Notice of Competing Preliminary Permit Applications Accepted for Filing and Soliciting Comments, Motions To Intervene, and Competing Applications

On January 11, 2011, Free Flow Power Corporation (Free Flow) and Northland Power Mississippi River LLC (Northland) filed preliminary permit applications, pursuant to section 4(f) of the Federal Power Act, proposing to study the feasibility of developing hydropower projects hydropower on the Mississippi River, near the town of St. Gabriel, in Iberville Parish, Louisiana. The sole purpose of a preliminary permit, if issued, is to grant the permit holder priority to file a license application during the permit term. A preliminary permit does not authorize the permit holder to perform any land-disturbing activities or otherwise enter upon lands or waters owned by others without the owners' express permission.

The proposed projects are described as follows:

Free Flow's hydrokinetic Project, Project No. 12843–003 would consist of: (1) Up to 2,550 SmartTurbine generating units installed in arrays on the bottom of the river; (2) the total capacity of the installation would be up to 102,000 kilowatts; (3) flexible cables would convey each arrays power to a metering station; and (4) a transmission line would interconnect with the power grid. The proposed project would have an average annual generation of 231,970,950 kilowatt-hours (kWh), which would be sold to a local utility.

Northland's hydrokinetic Project, Project No. 14099–000 would consist of: (1) Up to 380 TREK generating units installed in a matrix on the bottom of the river; (2) the total capacity of the installation would be up to 95,000 kilowatts; (3) shielded underwater cables would convey each matrix power to a substation; and (4) a transmission line would interconnect with the power grid. The proposed project would have an average annual generation of 832,000,000 kWh, which would be sold to a local utility.

Applicants Contact: For Free Flow: Ramya Swaminathan, Free Flow Power Corporation, 239 Causeway Street, Boston, MA 02114;

phone (978) 283–2822. For Northland: Tim Richardson, 30 St. Clair Avenue West 17th Floor, Toronto, Ontario, Canada; phone (416) 820–9521.

FERC Contact: Michael Spencer, (202) 502–6093.

Deadline for filing comments, motions to intervene, competing applications (without notices of intent), or notices of intent to file competing applications: 60 days from the issuance of this notice. Competing applications and notices of intent must meet the requirements of 18 CFR 4.36. Comments, motions to intervene, notices of intent, and competing applications may be filed electronically via the Internet. See 18 CFR 385.2001(a)(1)(iii) and the instructions on the Commission's Web site (*http://www.ferc.gov/docs-filing/ferconline.asp*) under the ''eFiling'' link. For a simpler method of submitting text-only comments, click on ''Quick Comment.'' For assistance, please contact FERC Online Support at *FERCOnlineSupport@ferc.gov;* call toll-free at (866) 208–3676; or, for TTY, contact (202) 502–8659. Although the Commission strongly encourages electronic filing, documents may also be paper-filed. To paper-file, mail an original and eight copies to: Kimberly D. Bose, Secretary, Federal Energy Regulatory Commission, 888 First Street, NE., Washington, DC 20426.

More information about this project, including a copy of the application, can be viewed or printed on the ''eLibrary'' link of the Commission's Web site at *http://www.ferc.gov/docs-filing/elibrary.asp.* Enter the docket number (P–12843–003, or P–14099–000) in the docket number field to access the document. For assistance, contact FERC Online Support.

Dated: August 18, 2011.

Kimberly D. Bose,

Secretary.

[FR Doc. 2011–21794 Filed 8–25–11; 8:45 am]

BILLING CODE 6717–01–P

DEPARTMENT OF ENERGY

Federal Energy Regulatory Commission

[Project No. 12858–003; Project No. 14097–000]

Free Flow Power Corporation; Northland Power Mississippi River LLC; Notice of Competing Preliminary Permit Applications Accepted for Filing and Soliciting Comments, Motions To Intervene, and Competing Applications

On January 11, 2011, Free Flow Power Corporation (Free Flow) and Northland Power Mississippi River LLC (Northland) filed preliminary permit applications, pursuant to section 4(f) of the Federal Power Act, proposing to study the feasibility of developing hydropower projects hydropower on the Mississippi River, near the town of Edgard, in St. James and St. John the Baptist Parishes, Louisiana. The sole purpose of a preliminary permit, if issued, is to grant the permit holder priority to file a license application during the permit term. A preliminary permit does not authorize the permit holder to perform any land-disturbing activities or otherwise enter upon lands or waters owned by others without the owners' express permission.

The proposed projects are described as follows:

Free Flow's hydrokinetic Project, Project No. 12858–003 would consist of: (1) Up to 2,950 SmartTurbine generating units installed in arrays on the bottom of the river; (2) the total capacity of the installation would be up to 118,000 kilowatts; (3) flexible cables would convey each array's power to a metering station; and (4) a transmission line would interconnect with the power grid. The proposed project would have an average annual generation of 268,358,550 kilowatt-hours (kWh), which would be sold to a local utility.

Northland's hydrokinetic Project, Project No. 14097–000 would consist of: (1) Up to 440 TREK generating units installed in a matrix on the bottom of the river; (2) the total capacity of the installation would be up to 110,000 kilowatts; (3) shielded underwater cables would convey each matrix's power to a substation; and (4) a transmission line would interconnect with the power grid. The proposed project would have an average annual generation of 964,000,000 kWh, which would be sold to a local utility.

Applicant's Contact: For Free Flow: Ramya Swaminathan, Free Flow Power Corporation, 239 Causeway Street, Boston, MA 02114; phone (978) 283–2822. For Northland: Tim Richardson, 30 St. Clair Avenue West, 17th Floor, Toronto, Ontario, Canada; phone (416) 820–9521.

FERC Contact: Michael Spencer, (202) 502–6093.

Deadline for filing comments, motions to intervene, competing applications (without notices of intent), or notices of intent to file competing applications: 60 days from the issuance of this notice. Competing applications and notices of intent must meet the requirements of 18 CFR 4.36. Comments, motions to intervene, notices of intent, and competing applications may be filed electronically via the Internet. See 18 CFR 385.2001(a)(1)(iii) and the instructions on the Commission's Web site (*http://www.ferc.gov/docs-filing/ferconline.asp*) under the ''eFiling'' link. For a simpler method of submitting text-only comments, click on ''Quick Comment.'' For assistance, please contact FERC Online Support at *FERCOnlineSupport@ferc.gov;* call toll-free at (866) 208–3676; or, for TTY, contact (202) 502–8659. Although the Commission strongly encourages electronic filing, documents may also be paper-filed. To paper-file, mail an original and eight copies to: Kimberly D. Bose, Secretary, Federal Energy Regulatory Commission, 888 First Street, NE., Washington, DC 20426.

More information about this project, including a copy of the application, can be viewed or printed on the ''eLibrary'' link of the Commission's Web site at *http://www.ferc.gov/docs-filing/elibrary.asp.* Enter the docket number (P–12858–003, or P–14097–000) in the docket number field to access the document. For assistance, contact FERC Online Support.

Dated: August 18, 2011.

Kimberly D. Bose,

Secretary.

[FR Doc. 2011–21789 Filed 8–25–11; 8:45 am]

BILLING CODE 6717–01–P

DEPARTMENT OF ENERGY

Federal Energy Regulatory Commission

[Project No. 12842–003; Project No. 14094–000]

Free Flow Power Corporation; Northland Power Mississippi River LLC; Notice of Competing Preliminary Permit Applications Accepted for Filing and Soliciting Comments, Motions To Intervene, and Competing Applications

On January 11, 2011, Free Flow Power Corporation (Free Flow) and Northland Power Mississippi River LLC (Northland) filed preliminary permit applications, pursuant to section 4(f) of the Federal Power Act, proposing to study the feasibility of developing hydropower projects hydropower on the Mississippi River, in St. James Parish, Louisiana. The sole purpose of a preliminary permit, if issued, is to grant the permit holder priority to file a license application during the permit term. A preliminary permit does not authorize the permit holder to perform any land-disturbing activities or otherwise enter upon lands or waters owned by others without the owners' express permission.

The proposed projects are described as follows:

Free Flow's hydrokinetic Project, Project No. 12842–003 would consist of: (1) Up to 2,600 SmartTurbine generating units

installed in arrays on the bottom of the river; (2) the total capacity of the installation would be up to 104,000 kilowatts; (3) flexible cables would convey each arrays power to a metering station; and (4) a transmission line would interconnect with the power grid. The proposed project would have an average annual generation of 236,519,400 kilowatt-hours (kWh), which would be sold to a local utility.

Northland's hydrokinetic Project, Project No. 14094–000 would consist of: (1) Up to 400 TREK generating units installed in a matrix on the bottom of the river; (2) the total capacity of the installation would be up to 100,000 kilowatts; (3) shielded underwater cables would convey each matrix power to a substation; and (4) a transmission line would interconnect with the power grid. The proposed project would have an average annual generation of 876,000,000 kWh, which would be sold to a local utility.

Applicants Contact: For Free Flow: Ramya Swaminathan, Free Flow Power Corporation, 239 Causeway Street, Boston, MA 02114; phone (978) 283–2822. For Northland: Tim Richardson, 30 St. Clair Avenue West 17th Floor, Toronto, Ontario, Canada; phone (416) 820–9521.

FERC Contact: Michael Spencer, (202) 502–6093.

Deadline for filing comments, motions to intervene, competing applications (without notices of intent), or notices of intent to file competing applications: 60 days from the issuance of this notice. Competing applications and notices of intent must meet the requirements of 18 CFR 4.36. Comments, motions to intervene, notices of intent, and competing applications may be filed electronically via the Internet. See 18 CFR 385.2001(a)(1)(iii) and the instructions on the Commission's Web site (*http://www.ferc.gov/docs-filing/ferconline.asp*) under the ''eFiling'' link. For a simpler method of submitting text-only comments, click on ''Quick Comment.'' For assistance, please contact FERC Online Support at *FERCOnlineSupport@ferc.gov;* call toll-free at (866) 208–3676; or, for TTY, contact (202) 502–8659. Although the Commission strongly encourages electronic filing, documents may also be paper-filed. To paper-file, mail an original and eight copies to: Kimberly D. Bose, Secretary, Federal Energy Regulatory Commission, 888 First Street, NE., Washington, DC 20426.

More information about this project, including a copy of the application, can be viewed or printed on the ''eLibrary'' link of the Commission's Web site at *http://www.ferc.gov/docs-filing/elibrary.asp.* Enter the docket number (P–12842–003, or P–14094–000) in the docket number field to access the document. For assistance, contact FERC Online Support.

Dated: August 18, 2011.

Kimberly D. Bose,

Secretary.

[FR Doc. 2011–21793 Filed 8–25–11; 8:45 am]

BILLING CODE 6717–01–P

DEPARTMENT OF ENERGY

Federal Energy Regulatory Commission

[Project No. 12844–003; Project No. 14093–000]

Free Flow Power Corporation; Northland Power Mississippi River LLC; Notice of Competing Preliminary Permit Applications Accepted for Filing and Soliciting Comments, Motions To Intervene, and Competing Applications

On January 11, 2011, Free Flow Power Corporation (Free Flow) and Northland Power Mississippi River LLC (Northland) filed preliminary permit applications, pursuant to section 4(f) of the Federal Power Act, proposing to study the feasibility of developing hydropower projects hydropower on the Mississippi River, near the town of St. Gabriel, in Iberville Parish, Louisiana. The sole purpose of a preliminary permit, if issued, is to grant the permit holder priority to file a license application during the permit term. A preliminary permit does not authorize the permit holder to perform any land-disturbing activities or otherwise enter upon lands or waters owned by others without the owners' express permission.

The proposed projects are described as follows:

Free Flow's hydrokinetic Project, Project No. 12844–003 would consist of: (1) Up to 1,100 SmartTurbine generating units installed in arrays on the bottom of the river; (2) the total capacity of the installation would be up to 44,000 kilowatts; (3) flexible cables would convey each arrays power to a metering station; and (4) a transmission line would interconnect with the power grid. The proposed project would have an average annual generation of 100,065,900 kilowatt-hours (kWh), which would be sold to a local utility.

Northland's hydrokinetic Project, Project No. 14093–000 would consist of: (1) Up to 160 TREK generating units installed in a matrix on the bottom of the river; (2) the total capacity of the installation would be up to 40,000 kilowatts; (3) shielded underwater cables would convey each matrix power to a substation; and (4) a transmission line would interconnect with the power grid. The proposed project would have an average annual generation of 350,000,000 kWh, which would be sold to a local utility.

Applicants Contact: For Free Flow: Ramya Swaminathan, Free Flow Power Corporation, 239 Causeway Street, Boston, MA 02114; phone (978) 283–2822. For Northland: Tim Richardson, 30 St. Clair Avenue West 17th Floor, Toronto, Ontario, Canada; phone (416) 820–9521.

FERC Contact: Michael Spencer, (202) 502–6093.

Deadline for filing comments, motions to intervene, competing applications (without notices of intent), or notices of intent to file competing applications: 60 days from the issuance of this notice. Competing applications and notices of intent must meet the requirements of 18 CFR 4.36. Comments, motions to intervene, notices of intent, and competing applications may be filed electronically via the Internet. See 18 CFR 385.2001(a)(1)(iii) and the instructions on the Commission's Web site (*http://www.ferc.gov/docs-filing/ferconline.asp*) under the ''eFiling'' link. For a simpler method of submitting text-only comments, click on ''Quick Comment.'' For assistance, please contact FERC Online Support at *FERCOnlineSupport@ferc.gov;* call toll-free at (866) 208–3676; or, for TTY, contact (202) 502–8659. Although the Commission strongly encourages electronic filing, documents may also be paper-filed. To paper-file, mail an original and eight copies to: Kimberly D. Bose, Secretary, Federal Energy Regulatory Commission, 888 First Street, NE., Washington, DC 20426.

More information about this project, including a copy of the application, can be viewed or printed on the ''eLibrary'' link of the Commission's Web site at *http://www.ferc.gov/docs-filing/elibrary.asp.* Enter the docket number (P–12844–003, or P–14093–000) in the docket number field to access the document. For assistance, contact FERC Online Support.

Dated: August 18, 2011.

Kimberly D. Bose,

Secretary.

[FR Doc. 2011–21795 Filed 8–25–11; 8:45 am]

BILLING CODE 6717–01–P

DEPARTMENT OF ENERGY

Federal Energy Regulatory Commission

[Project No. 12861–003; Project No. 14098–000]

Free Flow Power Corporation, Northland Power Mississippi River LLC; Notice of Competing Preliminary Permit Applications Accepted for Filing and Soliciting Comments, Motions To Intervene, and Competing Applications

On January 11, 2011, Free Flow Power Corporation (Free Flow) and Northland

Power Mississippi River LLC (Northland) filed preliminary permit applications, pursuant to section 4(f) of the Federal Power Act, proposing to study the feasibility of developing hydropower projects hydropower on the Mississippi River, near the town of Baton Rouge, in West Baton Rouge and East Baton Rouge Parishes, Louisiana. The sole purpose of a preliminary permit, if issued, is to grant the permit holder priority to file a license application during the permit term. A preliminary permit does not authorize the permit holder to perform any land-disturbing activities or otherwise enter upon lands or waters owned by others without the owners' express permission.

The proposed projects are described as follows:

Free Flow's hydrokinetic Project, Project No. 12861–003 would consist of: (1) Up to 1,000 SmartTurbine generating units installed in arrays on the bottom of the river; (2) the total capacity of the installation would be up to 40,000 kilowatts; (3) flexible cables would convey each arrays power to a metering station; and (4) a transmission line would interconnect with the power grid. The proposed project would have an average annual generation of 90,969,000 kilowatt-hours (kWh), which would be sold to a local utility.

Northland's hydrokinetic Project, Project No. 14098–000 would consist of: (1) Up to 160 TREK generating units installed in a matrix on the bottom of the river; (2) the total capacity of the installation would be up to 40,000 kilowatts; (3) shielded underwater cables would convey each matrix power to a substation; and (4) a transmission line would interconnect with the power grid. The proposed project would have an average annual generation of 350,000,000 kWh, which would be sold to a local utility.

Applicants Contact: For Free Flow: Ramya Swaminathan, Free Flow Power Corporation, 239 Causeway Street, Boston, MA 02114; phone (978) 283–2822. For Northland: Tim Richardson, 30 St. Clair Avenue West, 17th Floor, Toronto, Ontario, Canada; phone (416) 820–9521.

FERC Contact: Michael Spencer, (202) 502–6093.

Deadline for filing comments, motions to intervene, competing applications (without notices of intent), or notices of intent to file competing applications: 60 days from the issuance of this notice. Competing applications and notices of intent must meet the requirements of 18 CFR 4.36. Comments, motions to intervene, notices of intent, and competing applications may be filed electronically via the Internet. See 18 CFR 385.2001(a)(1)(iii) and the instructions on the Commission's Web site (*http://www.ferc.gov/docs-filing/ferconline.asp*) under the ''eFiling'' link. For a simpler method of submitting text-only comments, click on ''Quick Comment.'' For assistance, please contact FERC Online Support at *FERCOnlineSupport@ferc.gov*; call toll-free at (866) 208–3676; or, for TTY, contact (202) 502–8659. Although the Commission strongly encourages electronic filing, documents may also be paper-filed. To paper-file, mail an original and eight copies to: Kimberly D. Bose, Secretary, Federal Energy Regulatory Commission, 888 First Street, NE., Washington, DC 20426.

More information about this project, including a copy of the application, can be viewed or printed on the ''eLibrary'' link of the Commission's Web site at *http://www.ferc.gov/docs-filing/elibrary.asp.* Enter the docket number (P–12861–003, or P–14098–000) in the docket number field to access the document. For assistance, contact FERC Online Support.

Dated: August 18, 2011.

Kimberly D. Bose,

Secretary.

[FR Doc. 2011–21790 Filed 8–25–11; 8:45 am]

BILLING CODE 6717–01–P

DEPARTMENT OF ENERGY

Federal Energy Regulatory Commission

[Project No. 12856–003; Project No. 14089–000]

Free Flow Power Corporation; Northland Power Mississippi River LLC; Notice of Competing Preliminary Permit Applications Accepted for Filing and Soliciting Comments, Motions To Intervene, and Competing Applications

On January 11, 2011, Free Flow Power Corporation (Free Flow) and Northland Power Mississippi River LLC (Northland) filed preliminary permit applications, pursuant to section 4(f) of the Federal Power Act, proposing to study the feasibility of developing hydropower projects hydropower on the Mississippi River, near the town of Point a La Hache, in Plaquemines Parish, Louisiana. The sole purpose of a preliminary permit, if issued, is to grant the permit holder priority to file a license application during the permit term. A preliminary permit does not authorize the permit holder to perform any land-disturbing activities or otherwise enter upon lands or waters owned by others without the owners' express permission.

The proposed projects are described as follows:

Free Flow's hydrokinetic Project, Project No. 12856–003 would consist of: (1) Up to 1,750 SmartTurbine generating units installed in arrays on the bottom of the river; (2) the total capacity of the installation would be up to 70,000 kilowatts; (3) flexible cables would convey each arrays power to a metering station; and (4) a transmission line would interconnect with the power grid. The proposed project would have an average annual generation of 159,195,750 kilowatt-hours (kWh), which would be sold to a local utility.

Northland's hydrokinetic Project, Project No. 14089–000 would consist of: (1) Up to 260 TREK generating units installed in a matrix on the bottom of the river; (2) the total capacity of the installation would be up to 65,000 kilowatts; (3) shielded underwater cables would convey each matrix power to a substation; and (4) a transmission line would interconnect with the power grid. The proposed project would have an average annual generation of 569,000,000 kWh, which would be sold to a local utility.

Applicants Contact: For Free Flow: Ramya Swaminathan, Free Flow Power Corporation, 239 Causeway Street, Boston, MA 02114; phone (978) 283–2822. For Northland: Tim Richardson, 30 St. Clair Avenue West, 17th Floor, Toronto, Ontario, Canada; phone (416) 820–9521.

FERC Contact: Michael Spencer, (202) 502–6093.

Deadline for filing comments, motions to intervene, competing applications (without notices of intent), or notices of intent to file competing applications: 60 days from the issuance of this notice. Competing applications and notices of intent must meet the requirements of 18 CFR 4.36. Comments, motions to intervene, notices of intent, and competing applications may be filed electronically via the Internet. See 18 CFR 385.2001(a)(1)(iii) and the instructions on the Commission's Web site (*http://www.ferc.gov/docs-filing/ferconline.asp*) under the ''eFiling'' link. For a simpler method of submitting text-only comments, click on ''Quick Comment.'' For assistance, please contact FERC Online Support at *FERCOnlineSupport@ferc.gov;* call toll-free at (866) 208–3676; or, for TTY, contact (202) 502–8659. Although the Commission strongly encourages electronic filing, documents may also be paper-filed. To paper-file, mail an original and eight copies to: Kimberly D. Bose, Secretary, Federal Energy Regulatory Commission, 888 First Street, NE., Washington, DC 20426.

More information about this project, including a copy of the application, can be viewed or printed on the ''eLibrary'' link of the Commission's Web site at *http://www.ferc.gov/docs-filing/elibrary.asp.* Enter the docket number (P–12856–003, or P–14089–000) in the docket number field to access the document. For assistance, contact FERC Online Support.

Dated: August 18, 2011.

Kimberly D. Bose,

Secretary.

[FR Doc. 2011–21788 Filed 8–25–11; 8:45 am]

BILLING CODE 6717–01–P

DEPARTMENT OF ENERGY

Federal Energy Regulatory Commission

[Project No. 12854–003; Project No. 14091–000]

Free Flow Power Corporation; Northland Power Mississippi River LLC; Notice of Competing Preliminary Permit Applications Accepted for Filing and Soliciting Comments, Motions To Intervene, and Competing Applications

On January 11, 2011, Free Flow Power Corporation (Free Flow) and Northland Power Mississippi River LLC (Northland) filed preliminary permit applications, pursuant to section 4(f) of the Federal Power Act, proposing to study the feasibility of developing hydropower projects hydropower on the Mississippi River, near the town of Luling, in St. Charles Parish, Louisiana. The sole purpose of a preliminary permit, if issued, is to grant the permit holder priority to file a license application during the permit term. A preliminary permit does not authorize the permit holder to perform any land-disturbing activities or otherwise enter upon lands or waters owned by others without the owners' express permission.

The proposed projects are described as follows:

Free Flow's hydrokinetic Project, Project No. 12854–003 would consist of: (1) Up to 2,200 SmartTurbine generating units installed in arrays on the bottom of the river; (2) the total capacity of the installation would be up to 88,000 kilowatts; (3) flexible cables would convey each arrays power to a metering station; and (4) a transmission line would interconnect with the power grid. The proposed project would have an average annual generation of 200,131,800 kilowatt-hours (kWh), which would be sold to a local utility.

Northland's hydrokinetic Project, Project No. 14091–000 would consist of: (1) Up to 400 TREK generating units installed in a matrix on the bottom of the river; (2) the total capacity of the installation would be up to 100,000 kilowatts; (3) shielded underwater cables would convey each matrix power to a substation; and (4) a transmission line would interconnect with the power grid. The proposed project would have an average annual generation of 876,000,000 kWh, which would be sold to a local utility.

Applicants Contact: For Free Flow: Ramya Swaminathan, Free Flow Power Corporation, 239 Causeway Street, Boston, MA 02114; phone (978) 283–2822. For Northland: Tim Richardson, 30 St. Clair Avenue, West 17th Floor, Toronto, Ontario, Canada; phone (416) 820–9521.

FERC Contact: Michael Spencer, (202) 502–6093.

Deadline for filing comments, motions to intervene, competing applications (without notices of intent), or notices of intent to file competing applications: 60 days from the issuance of this notice. Competing applications and notices of intent must meet the requirements of 18 CFR 4.36. Comments, motions to intervene, notices of intent, and competing applications may be filed electronically via the Internet. See 18 CFR 385.2001(a)(1)(iii) and the instructions on the Commission's Web site (*http://www.ferc.gov/docs-filing/ferconline.asp*) under the ''eFiling'' link. For a simpler method of submitting text-only comments, click on ''Quick Comment.'' For assistance, please contact FERC Online Support at *FERCOnlineSupport@ferc.gov;* call toll-free at (866) 208–3676; or, for TTY, contact (202) 502–8659. Although the Commission strongly encourages electronic filing, documents may also be paper-filed. To paper-file, mail an original and eight copies to: Kimberly D. Bose, Secretary, Federal Energy Regulatory Commission, 888 First Street, NE., Washington, DC 20426.

More information about this project, including a copy of the application, can be viewed or printed on the ''eLibrary'' link of the Commission's Web site at *http://www.ferc.gov/docs-filing/elibrary.asp.* Enter the docket number (P–12854–003, or P–14091–000) in the docket number field to access the document. For assistance, contact FERC Online Support.

Dated: August 18, 2011.

Kimberly D. Bose,

Secretary.

[FR Doc. 2011–21787 Filed 8–25–11; 8:45 am]

BILLING CODE 6717–01–P

DEPARTMENT OF ENERGY

Federal Energy Regulatory Commission

[Project No. 12853–003; Project No. 14090–000]

Free Flow Power Corporation; Northland Power Mississippi River LLC; Notice of Competing Preliminary Permit Applications Accepted for Filing and Soliciting Comments, Motions To Intervene, and Competing Applications

On January 11, 2011, Free Flow Power Corporation (Free Flow) and Northland Power Mississippi River LLC (Northland) filed preliminary permit applications, pursuant to section 4(f) of the Federal Power Act, proposing to study the feasibility of developing hydropower projects hydropower on the Mississippi River, near the town of Ama, in St. Charles Parish, Louisiana. The sole purpose of a preliminary permit, if issued, is to grant the permit holder priority to file a license application during the permit term. A preliminary permit does not authorize the permit holder to perform any land-disturbing activities or otherwise enter upon lands or waters owned by others without the owners' express permission.

The proposed projects are described as follows:

Free Flow's hydrokinetic Project, Project No. 12853–003 would consist of: (1) Up to 1,350 SmartTurbine generating units installed in arrays on the bottom of the river; (2) the total capacity of the installation would be up to 54,000 kilowatts; (3) flexible cables would convey each array's power to a metering station; and (4) a transmission line would interconnect with the power grid. The proposed project would have an average annual generation of 122,808,150 kilowatt-hours (kWh), which would be sold to a local utility.

Northland's hydrokinetic Project, Project No. 14090–000 would consist of: (1) Up to 200 TREK generating units installed in a matrix on the bottom of the river; (2) the total capacity of the installation would be up to 50,000 kilowatts; (3) shielded underwater cables would convey each matrix's power to a substation; and (4) a transmission line would interconnect with the power grid. The proposed project would have an average annual generation of 438,000,000 kWh, which would be sold to a local utility.

Applicant's Contact: For Free Flow: Ramya Swaminathan, Free Flow Power Corporation, 239 Causeway Street, Boston, MA 02114; phone (978) 283–2822. For Northland: Tim Richardson, 30 St. Clair Avenue West, 17th Floor, Toronto, Ontario, Canada; phone (416) 820–9521.

FERC Contact: Michael Spencer, (202) 502–6093.

Deadline for filing comments, motions to intervene, competing applications (without notices of intent), or notices of intent to file competing applications: 60 days from the issuance of this notice. Competing applications and notices of intent must meet the requirements of 18 CFR 4.36. Comments, motions to intervene, notices of intent, and competing applications may be filed electronically via the Internet. See 18 CFR 385.2001(a)(1)(iii) and the instructions on the Commission's Web site (*http://www.ferc.gov/docs-filing/ferconline.asp*) under the ''eFiling'' link. For a simpler method of submitting text-only comments, click on ''Quick Comment.'' For assistance, please

contact FERC Online Support at *FERCOnlineSupport@ferc.gov;* call toll-free at (866) 208–3676; or, for TTY, contact (202) 502–8659. Although the Commission strongly encourages electronic filing, documents may also be paper-filed. To paper-file, mail an original and eight copies to: Kimberly D. Bose, Secretary, Federal Energy Regulatory Commission, 888 First Street, NE., Washington, DC 20426.

More information about this project, including a copy of the application, can be viewed or printed on the ''eLibrary'' link of the Commission's Web site at *http://www.ferc.gov/docs-filing/elibrary.asp*. Enter the docket number (P–12853–003, or P–14090–000) in the docket number field to access the document. For assistance, contact FERC Online Support.

Dated: August 18, 2011.

Kimberly D. Bose,

Secretary.

[FR Doc. 2011–21786 Filed 8–25–11; 8:45 am]

BILLING CODE 6717–01–P

DEPARTMENT OF ENERGY

Federal Energy Regulatory Commission

[Project No. 12849–003; Project No. 14095–000]

Free Flow Power Corporation; Northland Power Mississippi River LLC; Notice of Competing Preliminary Permit Applications Accepted for Filing and Soliciting Comments, Motions To Intervene, and Competing Applications

August 18, 2011.

On January 11, 2011, Free Flow Power Corporation (Free Flow) and Northland Power Mississippi River LLC (Northland) filed preliminary permit applications, pursuant to section 4(f) of the Federal Power Act, proposing to study the feasibility of developing hydropower projects hydropower on the Mississippi River, near the town of Point a La Hache, in Plaquemines Parish, Louisiana. The sole purpose of a preliminary permit, if issued, is to grant the permit holder priority to file a license application during the permit term. A preliminary permit does not authorize the permit holder to perform any land-disturbing activities or otherwise enter upon lands or waters owned by others without the owners' express permission.

The proposed projects are described as follows:

Free Flow's hydrokinetic Project, Project No. 12849–003 would consist of: (1) Up to 900 SmartTurbine generating units installed in arrays on the bottom of the river; (2) the total capacity of the installation would be up to 36,000 kilowatts; (3) flexible cables would convey each arrays power to a metering station; and (4) a transmission line would interconnect with the power grid. The proposed project would have an average annual generation of 81,872,100 kilowatt-hours (kWh), which would be sold to a local utility.

Northland's hydrokinetic Project, Project No. 14095–000 would consist of: (1) Up to 140 TREK generating units installed in a matrix on the bottom of the river; (2) the total capacity of the installation would be up to 35,000 kilowatts; (3) shielded underwater cables would convey each matrix power to a substation; and (4) a transmission line would interconnect with the power grid. The proposed project would have an average annual generation of 307,000,000 kWh, which would be sold to a local utility.

Applicants Contact: For Free Flow: Ramya Swaminathan, Free Flow Power Corporation, 239 Causeway Street, Boston, MA 02114; phone (978) 283–2822. For Northland: Tim Richardson, 30 St. Clair Avenue West 17th Floor, Toronto, Ontario, Canada; phone (416) 820–9521.

FERC Contact: Michael Spencer, (202) 502–6093.

Deadline for filing comments, motions to intervene, competing applications (without notices of intent), or notices of intent to file competing applications: 60 days from the issuance of this notice. Competing applications and notices of intent must meet the requirements of 18 CFR 4.36. Comments, motions to intervene, notices of intent, and competing applications may be filed electronically via the Internet. See 18 CFR 385.2001(a)(1)(iii) and the instructions on the Commission's Web site (*http://www.ferc.gov/docs-filing/ferconline.asp*) under the ''eFiling'' link. For a simpler method of submitting text-only comments, click on ''Quick Comment.'' For assistance, please contact FERC Online Support at *FERCOnlineSupport@ferc.gov;* call toll-free at (866) 208–3676; or, for TTY, contact (202) 502–8659. Although the Commission strongly encourages electronic filing, documents may also be paper-filed. To paper-file, mail an original and eight copies to: Kimberly D. Bose, Secretary, Federal Energy Regulatory Commission, 888 First Street, NE., Washington, DC 20426.

More information about this project, including a copy of the application, can be viewed or printed on the ''eLibrary'' link of the Commission's Web site at *http://www.ferc.gov/docs-filing/elibrary.asp.* Enter the docket number (P–12849–003, or P–14095–000) in the docket number field to access the document. For assistance, contact FERC Online Support.

Dated: August 18, 2011.

Kimberly D. Bose,

Secretary.

[FR Doc. 2011–21785 Filed 8–25–11; 8:45 am]

BILLING CODE 6717–01–P

DEPARTMENT OF ENERGY

Federal Energy Regulatory Commission

[Project No. 12929–002; Project No. 14079–000]

Free Flow Power Corporation; Northland Power Mississippi River LLC; Notice of Competing Preliminary Permit Applications Accepted for Filing and Soliciting Comments, Motions To Intervene, and Competing Applications

Free Flow Power Corporation (Free Flow) and Northland Power Mississippi River LLC (Northland) filed preliminary permit applications, pursuant to section 4(f) of the Federal Power Act, proposing to study the feasibility of developing hydropower projects hydropower on the Mississippi River, near the town of Helena, in Phillips County Arkansas, and Tunica and Coahoma counties, Mississippi. Both applications were filed electronically and given the filing date of February 1, 2011, at 8:30 a.m. The sole purpose of a preliminary permit, if issued, is to grant the permit holder priority to file a license application during the permit term. A preliminary permit does not authorize the permit holder to perform any land-disturbing activities or otherwise enter upon lands or waters owned by others without the owners' express permission.

The proposed projects are described as follows:

Free Flow's hydrokinetic Project, Project No. 12929–002 would consist of: (1) Up to 2,250 SmartTurbine generating units installed in arrays on the bottom of the river; (2) the total capacity of the installation would be up to 90,000 kilowatts; (3) flexible cables would convey each arrays power to a metering station; and (4) a transmission line would interconnect with the power grid. The proposed project would have an average annual generation of 197,100,000 kilowatt-hours (kWh), which would be sold to a local utility.

Northland's hydrokinetic Project, Project No. 14079–000 would consist of: (1) Up to 1,128 TREK generating units installed in a matrix on the bottom of the river; (2) the total capacity of the installation would be up to 282,000 kilowatts; (3) shielded underwater cables would convey each matrix power to a substation; and (4) a transmission line would interconnect with the power grid. The proposed project would have an average annual generation of 2,470,000,000 kWh, which would be sold to a local utility.

Applicants Contact: For Free Flow: Ramya Swaminathan, Free Flow Power Corporation, 239 Causeway Street, Boston, MA 02114; phone (978) 283–2822. For Northland: Tim Richardson, 30 St. Clair Avenue West 17th Floor, Toronto, Ontario, Canada; phone (416) 820–9521.

FERC Contact: Michael Spencer, (202) 502–6093.

Deadline for filing comments, motions to intervene, competing applications (without notices of intent), or notices of intent to file competing applications: 60 days from the issuance of this notice. Competing applications and notices of intent must meet the requirements of 18 CFR 4.36. Comments, motions to intervene, notices of intent, and competing applications may be filed electronically via the Internet. See 18 CFR 385.2001(a)(1)(iii) and the instructions on the Commission's Web site (*http://www.ferc.gov/docs-filing/ferconline.asp*) under the ''eFiling'' link. For a simpler method of submitting text-only comments, click on ''Quick Comment.'' For assistance, please contact FERC Online Support at *FERCOnlineSupport@ferc.gov;* call toll-free at (866) 208–3676; or, for TTY, contact (202) 502–8659. Although the Commission strongly encourages electronic filing, documents may also be paper-filed. To paper-file, mail an original and eight copies to: Kimberly D. Bose, Secretary, Federal Energy Regulatory Commission, 888 First Street, NE., Washington, DC 20426.

More information about this project, including a copy of the application, can be viewed or printed on the ''eLibrary'' link of the Commission's Web site at *http://www.ferc.gov/docs-filing/elibrary.asp.* Enter the docket number (P–12929–002, or P–14079–000) in the docket number field to access the document. For assistance, contact FERC Online Support.

Dated: August 19, 2011.

Kimberly D. Bose,

Secretary.

[FR Doc. 2011–21822 Filed 8–25–11; 8:45 am]

BILLING CODE 6717–01–P

DEPARTMENT OF ENERGY

Federal Energy Regulatory Commission

[Project No. 12869–003; Project No. 14096–000]

Free Flow Power Corporation; Northland Power Mississippi River LLC; Notice of Competing Preliminary Permit Applications Accepted for Filing and Soliciting Comments, Motions To Intervene, and Competing Applications

On January 11, 2011, Free Flow Power Corporation (Free Flow) and Northland Power Mississippi River LLC (Northland) filed preliminary permit applications, pursuant to section 4(f) of the Federal Power Act, proposing to study the feasibility of developing hydropower projects hydropower on the Mississippi River, in Ascension and St. James Parishes, Louisiana. The sole purpose of a preliminary permit, if issued, is to grant the permit holder priority to file a license application during the permit term. A preliminary permit does not authorize the permit holder to perform any land-disturbing activities or otherwise enter upon lands or waters owned by others without the owners' express permission.

The proposed projects are described as follows:

Free Flow's hydrokinetic Project, Project No. 12869–003 would consist of: (1) Up to 2,300 SmartTurbine generating units installed in arrays on the bottom of the river; (2) the total capacity of the installation would be up to 92,000 kilowatts; (3) flexible cables would convey each arrays power to a metering station; and (4) a transmission line would interconnect with the power grid. The proposed project would have an average annual generation of 209,228,700 kilowatt-hours (kWh), which would be sold to a local utility.

Northland's hydrokinetic Project, Project No. 14096–000 would consist of: (1) Up to 340 TREK generating units installed in a matrix on the bottom of the river; (2) the total capacity of the installation would be up to 85,000 kilowatts; (3) shielded underwater cables would convey each matrix power to a substation; and (4) a transmission line would interconnect with the power grid. The proposed project would have an average annual generation of 745,000,000 kWh, which would be sold to a local utility.

Applicants Contact: For Free Flow: Ramya Swaminathan, Free Flow Power Corporation, 239 Causeway Street, Boston, MA 02114; phone (978) 283–2822. For Northland: Tim Richardson, 30 St. Clair Avenue West 17th Floor, Toronto, Ontario, Canada; phone (416) 820–9521.

FERC Contact: Michael Spencer, (202) 502–6093.

Deadline for filing comments, motions to intervene, competing applications (without notices of intent), or notices of intent to file competing applications: 60 days from the issuance of this notice. Competing applications and notices of intent must meet the requirements of 18 CFR 4.36. Comments, motions to intervene, notices of intent, and competing applications may be filed electronically via the Internet. See 18 CFR 385.2001(a)(1)(iii) and the instructions on the Commission's Web site (*http://www.ferc.gov/docs-filing/ferconline.asp*) under the ''eFiling'' link. For a simpler method of submitting text-only comments, click on ''Quick Comment.'' For assistance, please contact FERC Online Support at *FERCOnlineSupport@ferc.gov;* call toll-free at (866) 208–3676; or, for TTY, contact (202) 502–8659. Although the Commission strongly encourages electronic filing, documents may also be paper-filed. To paper-file, mail an original and eight copies to: Kimberly D. Bose, Secretary, Federal Energy Regulatory Commission, 888 First Street, NE., Washington, DC 20426.

More information about this project, including a copy of the application, can be viewed or printed on the ''eLibrary'' link of the Commission's Web site at *http://www.ferc.gov/docs-filing/elibrary.asp.* Enter the docket number (P–12869–003, or P–14096–000) in the docket number field to access the document. For assistance, contact FERC Online Support.

Dated: August 18, 2011.

Kimberly D. Bose,

Secretary.

[FR Doc. 2011–21825 Filed 8–25–11; 8:45 am]

BILLING CODE 6717–01–P

DEPARTMENT OF ENERGY

Federal Energy Regulatory Commission

[Project No. 12848–002; Project No. 14081–000]

Free Flow Power Corporation; Northland Power Mississippi River LLC; Notice of Competing Preliminary Permit Applications Accepted for Filing and Soliciting Comments, Motions To Intervene, and Competing Applications

Free Flow Power Corporation (Free Flow) and Northland Power Mississippi River LLC (Northland) filed preliminary permit applications, pursuant to section 4(f) of the Federal Power Act, proposing to study the feasibility of developing hydropower projects hydropower on the Mississippi River, near the town of New Orleans, in Orleans Parish, Louisiana.

Both applications were filed electronically and given the filing date of February 1, 2011, at 8:30 AM. The sole purpose of a preliminary permit, if issued, is to grant the permit holder priority to file a license application during the permit term. A preliminary permit does not authorize the permit holder to perform any land-disturbing activities or otherwise enter upon lands or waters owned by others without the owners' express permission.

The proposed projects are described as follows:

Free Flow's hydrokinetic Project, Project No. 12848–002 would consist of: (1) Up to 2,250 SmartTurbine generating units installed in arrays on the bottom of the river; (2) the total capacity of the installation would be up to 90,000 kilowatts; (3) flexible cables would convey each arrays power to a metering station; and (4) a transmission line would interconnect with the power grid. The proposed project would have an average annual generation of 197,100,000 kilowatt-hours (kWh), which would be sold to a local utility.

Northland's hydrokinetic Project, Project No. 14081–000 would consist of: (1) Up to 50 TREK generating units installed in a matrix on the bottom of the river; (2) the total capacity of the installation would be up to 38,000 kilowatts; (3) shielded underwater cables would convey each matrix power to a substation; and (4) a transmission line would interconnect with the power grid. The proposed project would have an average annual generation of 329,000,000 kWh, which would be sold to a local utility.

Applicants Contact: For Free Flow: Ramya Swaminathan, Free Flow Power Corporation, 239 Causeway Street, Boston, MA 02114; phone (978) 283–2822. For Northland: Tim Richardson, 30 St. Clair Avenue West 17th Floor, Toronto, Ontario, Canada; phone (416) 820–9521.

FERC Contact: Michael Spencer, (202) 502–6093.

Deadline for filing comments, motions to intervene, competing applications (without notices of intent), or notices of intent to file competing applications: 60 days from the issuance of this notice. Competing applications and notices of intent must meet the requirements of 18 CFR 4.36. Comments, motions to intervene, notices of intent, and competing applications may be filed electronically via the Internet. See 18 CFR 385.2001(a)(1)(iii) and the instructions on the Commission's Web site (*http://www.ferc.gov/docs-filing/ferconline.asp*) under the ''eFiling'' link. For a simpler method of submitting text-only comments, click on ''Quick Comment.'' For assistance, please contact FERC Online Support at *FERCOnlineSupport@ferc.gov;* call toll-free at (866) 208–3676; or, for TTY, contact (202) 502–8659. Although the Commission strongly encourages electronic filing, documents may also be paper-filed. To paper-file, mail an original and eight copies to: Kimberly D. Bose, Secretary, Federal Energy Regulatory Commission, 888 First Street, NE., Washington, DC 20426.

More information about this project, including a copy of the application, can be viewed or printed on the ''eLibrary'' link of the Commission's Web site at *http://www.ferc.gov/docs-filing/elibrary.asp.* Enter the docket number (P–12848–002, or P–14081–000) in the docket number field to access the document. For assistance, contact FERC Online Support.

Dated: August 19, 2011.

Kimberly D. Bose,

Secretary.

[FR Doc. 2011–21824 Filed 8–25–11; 8:45 am]

BILLING CODE 6717–01–P

DEPARTMENT OF ENERGY

Federal Energy Regulatory Commission

[Project No. 12866–002; Project No. 14071–000]

Free Flow Power Corporation; Northland Power Mississippi River LLC; Notice of Competing Preliminary Permit Applications Accepted for Filing and Soliciting Comments, Motions To Intervene, and Competing Applications

Free Flow Power Corporation (Free Flow) and Northland Power Mississippi River LLC (Northland) filed preliminary permit applications, pursuant to section 4(f) of the Federal Power Act, proposing to study the feasibility of developing hydropower projects on the Mississippi River, near the town of Avondale, in Jefferson Parish, Louisiana. Both applications were filed electronically and given the filing date of February 1, 2011, at 8:30 a.m. The sole purpose of a preliminary permit, if issued, is to grant the permit holder priority to file a license application during the permit term. A preliminary permit does not authorize the permit holder to perform any land-disturbing activities or otherwise enter upon lands or waters owned by others without the owners' express permission.

The proposed projects are described as follows:

Free Flow's hydrokinetic Project, Project No. 12866–002 would consist of: (1) Up to 2,250 SmartTurbine generating units installed in arrays on the bottom of the river; (2) the total capacity of the installation would be up to 90,000 kilowatts; (3) flexible cables would convey each arrays power to a metering station; and (4) a transmission line would interconnect with the power grid. The proposed project would have an average annual generation of 197,100,000 kilowatt-hours (kWh), which would be sold to a local utility.

Northland's hydrokinetic Project, Project No. 14071–000 would consist of: (1) Up to 75 TREK generating units installed in a matrix on the bottom of the river; (2) the total capacity of the installation would be up to 19,000 kilowatts; (3) shielded underwater cables would convey each matrix power to a substation; and (4) a transmission line would interconnect with the power grid. The proposed project would have an average annual generation of 165,000,000 kWh, which would be sold to a local utility.

Applicants Contact: For Free Flow: Ramya Swaminathan, Free Flow Power Corporation, 239 Causeway Street, Boston, MA 02114; phone (978) 283–2822. For Northland: Tim Richardson, 30 St. Clair Avenue West 17th Floor, Toronto, Ontario, Canada; phone (416) 820–9521.

FERC Contact: Michael Spencer, (202) 502–6093.

Deadline for filing comments, motions to intervene, competing applications (without notices of intent), or notices of intent to file competing applications: 60 days from the issuance of this notice. Competing applications and notices of intent must meet the requirements of 18 CFR 4.36. Comments, motions to intervene, notices of intent, and competing applications may be filed electronically via the Internet. See 18 CFR 385.2001(a)(1)(iii) and the instructions on the Commission's Web site (*http://www.ferc.gov/docs-filing/ferconline.asp*) under the ''eFiling'' link. For a simpler method of submitting text-only comments, click on ''Quick Comment.'' For assistance, please contact FERC Online Support at *FERCOnlineSupport@ferc.gov;* call toll-free at (866) 208–3676; or, for TTY, contact (202) 502–8659. Although the Commission strongly encourages electronic filing, documents may also be paper-filed. To paper-file, mail an original and eight copies to: Kimberly D. Bose, Secretary, Federal Energy Regulatory Commission, 888 First Street, NE., Washington, DC 20426.

More information about this project, including a copy of the application, can be viewed or printed on the ''eLibrary'' link of the Commission's Web site at *http://www.ferc.gov/docs-filing/elibrary.asp.* Enter the docket number (P–12866–002, or P–14071–000) in the docket number field to access the document. For assistance, contact FERC Online Support.

Dated: August 19, 2011.

Kimberly D. Bose,

Secretary.

[FR Doc. 2011–21817 Filed 8–25–11; 8:45 am]

BILLING CODE 6717–01–P

DEPARTMENT OF ENERGY

Federal Energy Regulatory Commission

[Project No. 12851–002; Project No. 14082–000]

Free Flow Power Corporation; Northland Power Mississippi River LLC; Notice of Competing Preliminary Permit Applications Accepted for Filing and Soliciting Comments, Motions To Intervene, and Competing Applications

Free Flow Power Corporation (Free Flow) and Northland Power Mississippi River LLC (Northland) filed preliminary permit applications, pursuant to section 4(f) of the Federal Power Act, proposing to study the feasibility of developing hydropower projects hydropower on the Mississippi River, near the town of New Orleans, in Jefferson and Orleans Parishes, Louisiana. Both applications were filed electronically and given the filing date of February 1, 2011, at 8:30 AM. The sole purpose of a preliminary permit, if issued, is to grant the permit holder priority to file a license application during the permit term. A preliminary permit does not authorize the permit holder to perform any land-disturbing activities or otherwise enter upon lands or waters owned by others without the owners' express permission.

The proposed projects are described as follows:

Free Flow's hydrokinetic Project, Project No. 12851–002 would consist of: (1) Up to 2,250 SmartTurbine generating units installed in arrays on the bottom of the river; (2) the total capacity of the installation would be up to 90,000 kilowatts; (3) flexible cables would convey each arrays power to a metering station; and (4) a transmission line would interconnect with the power grid. The proposed project would have an average annual generation of 197,100,000 kilowatt-hours (kWh), which would be sold to a local utility.

Northland's hydrokinetic Project, Project No. 14082–000 would consist of: (1) Up to 150 TREK generating units installed in a matrix on the bottom of the river; (2) the total capacity of the installation would be up to 38,000 kilowatts; (3) shielded underwater cables would convey each matrix power to a substation; and (4) a transmission line would interconnect with the power grid. The proposed project would have an average annual generation of 329,000,000 gigawatt-hours (GWh), which would be sold to a local utility.

Applicants Contact: For Free Flow: Ramya Swaminathan, Free Flow Power Corporation, 239 Causeway Street, Boston, MA 02114; phone (978) 283–2822. For Northland: Tim Richardson, 30 St. Clair Avenue West 17th Floor, Toronto, Ontario, Canada; phone (416) 820–9521.

FERC Contact: Michael Spencer, (202) 502–6093.

Deadline for filing comments, motions to intervene, competing applications (without notices of intent), or notices of intent to file competing applications: 60 days from the issuance of this notice. Competing applications and notices of intent must meet the requirements of 18 CFR 4.36. Comments, motions to intervene, notices of intent, and competing applications may be filed electronically via the Internet. See 18 CFR 385.2001(a)(1)(iii) and the instructions on the Commission's Web site (*http://www.ferc.gov/docs-filing/ferconline.asp*) under the ''eFiling'' link. For a simpler method of submitting text-only comments, click on ''Quick Comment.'' For assistance, please contact FERC Online Support at *FERCOnlineSupport@ferc.gov;* call toll-free at (866) 208–3676; or, for TTY, contact (202) 502–8659. Although the Commission strongly encourages electronic filing, documents may also be paper-filed. To paper-file, mail an original and eight copies to: Kimberly D. Bose, Secretary, Federal Energy Regulatory Commission, 888 First Street, NE., Washington, DC 20426.

More information about this project, including a copy of the application, can be viewed or printed on the ''eLibrary'' link of the Commission's Web site at *http://www.ferc.gov/docs-filing/elibrary.asp.* Enter the docket number (P–12851–002, or P–14082–000) in the docket number field to access the document. For assistance, contact FERC Online Support.

Dated: August 19, 2011.

Kimberly D. Bose,

Secretary.

[FR Doc. 2011–21813 Filed 8–25–11; 8:45 am]

BILLING CODE 6717–01–P

DEPARTMENT OF ENERGY

Federal Energy Regulatory Commission

[Docket No. PF11–2–000]

Freeport LNG Development, LP; Freeport LNG Expansion, LP; FLNG Liquefaction LLC; Notice of Intent To Prepare an Environmental Assessment for the Planned Liquefaction Project, Request for Comments on Environmental Issues, and Notice of Public Scoping Meeting

The staff of the Federal Energy Regulatory Commission (FERC or Commission) will prepare an environmental assessment (EA) that will discuss the environmental impacts of the Liquefaction Project (Project) involving construction and operation of facilities proposed by Freeport LNG Development, LP, Freeport LNG Expansion, LP, and FLNG Liquefaction LLC (collectively referred to as Freeport) in Brazoria County, Texas. This EA will be used by the Commission in its decision-making process to determine whether the project is in the public convenience and necessity.

This notice announces the opening of the scoping process the Commission will use to gather input from the public and interested agencies on the project. Your input will help the Commission staff determine what issues need to be evaluated in the EA. Please note that the scoping period will close on September 19, 2011.

Comments may be submitted in written form or verbally. Further details on how to submit written comments are provided in the Public Participation section of this notice. In lieu of or in addition to sending written comments, the Commission invites you to attend the public scoping meeting scheduled as follows:

FERC Public Scoping Meeting, Freeport Liquefaction Project, 7 p.m.—Thursday, September 8, 2011.
Lake Jackson Civic Center, 333 Highway 332 E, Lake Jackson, TX 77566, (979) 415–2600.

This notice is being sent to the Commission's current environmental mailing list for this project. State and local government representatives are asked to notify their constituents of this planned project and encourage them to comment on their areas of concern.

Summary of the Planned Project

Freeport plans to add natural gas liquefaction and exportation capabilities to its existing liquefied natural gas (LNG) import terminal on Quintana Island in Brazoria County, Texas. The Project would consist of the construction and installation of facilities to be used for liquefaction and export of domestic natural gas. In addition, A nonjurisdictional pretreatment facility would be constructed and operated at or near the Stratton Ridge underground storage and meter station sites.

The planned facilities would consist of the following components:

- Three natural gas liquefaction refrigerant units;
- Expansion of existing Quintana Island Terminal Facility components; and
- The nonjurisdictional natural gas pre-treatment systems, additional compression, and minor modifications in the Stratton Ridge Meter Station area.

In addition, a second ship berthing area, third LNG storage tank, and additional LNG vaporization and natural gas send-out facilities that were previously authorized under FERC Docket CP05–361–000 but never constructed would be repurposed to meet the needs of the Project.

Freeport indicates that the Project would produce about 12.0 million metric tons per year of LNG. This would allow Freeport to convert domestically produced natural gas to LNG for storage and export. Freeport LNG plans to commence construction in December 2012 and expects to be ready to commence LNG exports in late- 2015.

The general location of the project facilities is shown in Appendix 1.[1]

Land Requirements for Construction

Construction of the planned facilities would disturb about 116.9 acres of land on Quintana Island. Additional land would be required for the pre-treatment facilities near Stratton Ridge Meter Station. Following construction, about 76 acres would be maintained for permanent operation of the project's facilities on Quintana Island; the remaining acreage may be restored and allowed to revert to former uses.

The EA Process

The National Environmental Policy Act (NEPA) requires the Commission to take into account the environmental impacts that could result from an action whenever it considers the issuance of a Certificate of Public Convenience and Necessity. NEPA also requires us[2] to discover and address concerns the public may have about proposals. This process is referred to as scoping. The main goal of the scoping process is to focus the analysis in the EA on the important environmental issues. By this notice, the Commission requests public comments on the scope of the issues to address in the EA. All comments received will be considered during the preparation of the EA.

In the EA we will discuss impacts that could occur as a result of the construction and operation of the planned project under these general headings:

- Geology and soils;
- Water resources, and fisheries;
- Vegetation and wildlife;
- Cultural resources;
- Socioeconomics;
- Land use;
- Air quality and noise; and
- Reliability and public safety.

We will also evaluate possible alternatives to the planned project or portions of the project, and make recommendations on how to lessen or avoid impacts on the various resource areas.

Although no formal application has been filed, we have already initiated our NEPA review under the Commission's pre-filing process. The purpose of the pre-filing process is to encourage early involvement of interested stakeholders and to identify and resolve issues before an application is filed with the FERC. As part of our pre-filing review, we have begun to contact some federal and state agencies to discuss their involvement in the scoping process and the preparation of the EA.

Our independent analysis of the issues will be presented in the EA. The EA will be placed in the public record and, depending on the comments received during the scoping process, may be published and distributed to the public. A comment period will be allotted if the EA is published for review. We will consider all comments on the EA before we make our recommendations to the Commission. To ensure your comments are considered, please carefully follow the instructions in the Public Participation section beginning on page 5.

With this notice, we are asking agencies with jurisdiction and/or special expertise with respect to environmental issues to formally cooperate with us in the preparation of the EA. These agencies may choose to participate once they have evaluated the proposal relative to their responsibilities. Agencies that would like to request cooperating agency status should follow the instructions for filing comments provided under the Public Participation section of this notice.

Consultations Under Section 106 of the National Historic Preservation Act

In accordance with the Advisory Council on Historic Preservation's implementing regulations for section 106 of the National Historic Preservation Act, we are using this notice to initiate consultation with the Texas State Historic Preservation Office, and to solicit their views and those of other government agencies, interested Indian tribes, and the public on the project's potential effects on historic properties.[3] We will define the project-specific Area of Potential Effects (APE) in consultation with the SHPO as the project is further developed. On natural gas facility projects, the APE at a minimum encompasses all areas subject to ground disturbance. Our EA for this project will document our findings on the impacts on historic properties and summarize the status of consultations under section 106.

Currently Identified Environmental Issues

We have already identified several issues that we think deserve attention based on a preliminary review of the planned facilities and the environmental information provided by Freeport. This preliminary list of issues may be changed based on your comments and our analysis.

- Air Quality
- Noise and vibration impacts
- Socioeconomic impacts
- Geology
- Wetlands and waterbodies
- Threatened and endangered species
- Public safety

Public Participation

You can make a difference by providing us with your specific comments or concerns about the project. Your comments should focus on the potential environmental effects, reasonable alternatives, and measures to avoid or lessen environmental impacts. The more specific your comments, the more useful they will be. To ensure that your comments are timely and properly recorded, please send your comments so that they will be received in Washington, DC on or before September 19, 2011.

For your convenience, there are three methods you can use to submit your comments to the Commission. In all instances, please reference the project docket number PF11–2–000 with your submission. The Commission encourages electronic filing of comments and has expert eFiling staff available to assist you at (202) 502–8258 or *efiling@ferc.gov.*

(1) You may file your comments electronically by using the eComment feature, which is located on the Commission's Web site at *http://www.ferc.gov* under the link to Documents and Filings. An eComment is an easy method for interested persons

[1] The appendices referenced in this notice are not being printed in the **Federal Register**. Copies of appendices were sent to all those receiving this notice in the mail and are available at *http://www.ferc.gov* using the link called ''eLibrary'' or from the Commission's Public Reference Room, 888 First Street NE., Washington, DC 20426, or call (202) 502–8371. For instructions on connecting to eLibrary, refer to the last page of this notice.

[2] ''We,'' ''us,'' and ''our'' refer to the environmental staff of the Commission's Office of Energy Projects.

[3] The Advisory Council on Historic Preservation's regulations are at Title 36, Code of Federal Regulations, Part 800. Historic properties are defined in those regulations as any prehistoric or historic district, site, building, structure, or object included in or eligible for inclusion in the National Register for Historic Places.

to submit brief, text-only comments on a project;

(2) You may file your comments electronically by using the eFiling feature, which is located on the Commission's Web site at *http://www.ferc.gov* under the link to Documents and Filings. With eFiling, you can provide comments in a variety of formats by attaching them as a file with your submission. New eFiling users must first create an account by clicking on ''eRegister.'' You will be asked to select the type of filing you are making. A comment on a particular project is considered a ''Comment on a Filing''; or

(3) You may mail a paper copy of your comments to the Commission at the following address: Kimberly D. Bose, Secretary, Federal Energy Regulatory Commission, 888 First Street NE., Room 1A, Washington, DC 20426.

Environmental Mailing List

The environmental mailing list includes federal, state, and local government representatives and agencies; elected officials; environmental and public interest groups; Indian tribes; other interested parties; and local libraries and newspapers. This list also includes all affected landowners (as defined in the Commission's regulations) who are potential right-of-way grantors, whose property may be used temporarily for project purposes, or who own homes within certain distances of aboveground facilities, and anyone who submits comments on the project. We will update the environmental mailing list as the analysis proceeds to ensure that we send the information related to this environmental review to all individuals, organizations, and government entities interested in and/or potentially affected by the planned project.

If the EA is published for distribution, copies will be sent to the environmental mailing list for public review and comment. If you would prefer to receive a paper copy of the document instead of the CD version or would like to remove your name from the mailing list, please return the attached Information Request (Appendix 2).

Becoming an Intervenor

Once Freeport files its application with the Commission, you may want to become an ''intervenor'' which is an official party to the Commission's proceeding. Intervenors play a more formal role in the process and are able to file briefs, appear at hearings, and be heard by the courts if they choose to appeal the Commission's final ruling. An intervenor formally participates in the proceeding by filing a request to intervene. Instructions for becoming an intervenor are included in the User's Guide under the ''e-filing'' link on the Commission's Web site. Please note that the Commission will not accept requests for intervenor status at this time. You must wait until a formal application for the project is filed with the Commission.

Additional Information

Additional information about the project is available from the Commission's Office of External Affairs, at (866) 208–FERC, or on the FERC Web site (*http://www.ferc.gov*) using the eLibrary link. Click on the eLibrary link, click on ''General Search'' and enter the docket number, excluding the last three digits in the Docket Number field (i.e., PF11–2–000). Be sure you have selected an appropriate date range. For assistance, please contact FERC Online Support at *FercOnlineSupport@ferc.gov* or toll free at (866) 208–3676, or for TTY, contact (202) 502–8659. The eLibrary link also provides access to the texts of formal documents issued by the Commission, such as orders, notices, and rulemakings.

In addition, the Commission offers a free service called eSubscription which allows you to keep track of all formal issuances and submittals in specific dockets. This can reduce the amount of time you spend researching proceedings by automatically providing you with notification of these filings, document summaries, and direct links to the documents. Go to *http://www.ferc.gov/esubscribenow.htm.*

Finally, public meetings or site visits will be posted on the Commission's calendar located at *http://www.ferc.gov/EventCalendar/EventsList.aspx* along with other related information.

Dated: August 18, 2011.

Kimberly D. Bose,

Secretary.

[FR Doc. 2011–21799 Filed 8–25–11; 8:45 am]

BILLING CODE 6717–01–P

DEPARTMENT OF ENERGY

Federal Energy Regulatory Commission

[Docket No. ER11–4326–000]

Viridian Energy MD LLC; Supplemental Notice That Initial Market-Based Rate Filing Includes Request for Blanket Section 204 Authorization

This is a supplemental notice in the above-referenced proceeding of Viridian Energy MD LLC's application for market-based rate authority, with an accompanying rate tariff, noting that such application includes a request for blanket authorization, under 18 CFR part 34, of future issuances of securities and assumptions of liability.

Any person desiring to intervene or to protest should file with the Federal Energy Regulatory Commission, 888 First Street, NE., Washington, DC 20426, in accordance with Rules 211 and 214 of the Commission's Rules of Practice and Procedure (18 CFR 385.211 and 385.214). Anyone filing a motion to intervene or protest must serve a copy of that document on the Applicant.

Notice is hereby given that the deadline for filing protests with regard to the applicant's request for blanket authorization, under 18 CFR part 34, of future issuances of securities and assumptions of liability, is September 7, 2011.

The Commission encourages electronic submission of protests and interventions in lieu of paper, using the FERC Online links at *http://www.ferc.gov.* To facilitate electronic service, persons with Internet access who will eFile a document and/or be listed as a contact for an intervenor must create and validate an eRegistration account using the eRegistration link. Select the eFiling link to log on and submit the intervention or protests.

Persons unable to file electronically should submit an original and 14 copies of the intervention or protest to the Federal Energy Regulatory Commission, 888 First Street, NE., Washington, DC 20426.

The filings in the above-referenced proceeding are accessible in the Commission's eLibrary system by clicking on the appropriate link in the above list. They are also available for review in the Commission's Public Reference Room in Washington, DC. There is an eSubscription link on the Web site that enables subscribers to receive e-mail notification when a document is added to a subscribed dockets(s). For assistance with any FERC Online service, please e-mail *FERCOnlineSupport@ferc.gov* or call (866) 208–3676 (toll free). For TTY, call (202) 502–8659.

Dated: August 18, 2011.

Kimberly D. Bose,

Secretary.

[FR Doc. 2011–21792 Filed 8–25–11; 8:45 am]

BILLING CODE 6717–01–P

DEPARTMENT OF ENERGY

Federal Energy Regulatory Commission

[Docket No. ER11–4339–000]

ENBALA Power Networks (USA), Inc.; Supplemental Notice That Initial Market-Based Rate Filing Includes Request for Blanket Section 204 Authorization

This is a supplemental notice in the above-referenced proceeding of ENBALA Power Networks (USA), Inc.'s application for market-based rate authority, with an accompanying rate tariff, noting that such application includes a request for blanket authorization, under 18 CFR part 34, of future issuances of securities and assumptions of liability.

Any person desiring to intervene or to protest should file with the Federal Energy Regulatory Commission, 888 First Street, NE., Washington, DC 20426, in accordance with Rules 211 and 214 of the Commission's Rules of Practice and Procedure (18 CFR 385.211 and 385.214). Anyone filing a motion to intervene or protest must serve a copy of that document on the Applicant.

Notice is hereby given that the deadline for filing protests with regard to the applicant's request for blanket authorization, under 18 CFR part 34, of future issuances of securities and assumptions of liability, is September 12, 2011.

The Commission encourages electronic submission of protests and interventions in lieu of paper, using the FERC Online links at *http://www.ferc.gov.* To facilitate electronic service, persons with Internet access who will eFile a document and/or be listed as a contact for an intervenor must create and validate an eRegistration account using the eRegistration link. Select the eFiling link to log on and submit the intervention or protests.

Persons unable to file electronically should submit an original and 14 copies of the intervention or protest to the Federal Energy Regulatory Commission, 888 First Street, NE., Washington, DC 20426.

The filings in the above-referenced proceeding are accessible in the Commission's eLibrary system by clicking on the appropriate link in the above list. They are also available for review in the Commission's Public Reference Room in Washington, DC. There is an eSubscription link on the Web site that enables subscribers to receive e-mail notification when a document is added to a subscribed dockets(s). For assistance with any FERC Online service, please e-mail *FERCOnlineSupport@ferc.gov* or call (866) 208–3676 (toll free). For TTY, call (202) 502–8659.

Dated: August 22, 2011.

Kimberly D. Bose,

Secretary.

[FR Doc. 2011–21917 Filed 8–25–11; 8:45 am]

BILLING CODE 6717–01–P

DEPARTMENT OF ENERGY

Federal Energy Regulatory Commission

[Project No. 14103–000]

Northland Power Mississippi River LLC; Notice of Preliminary Permit Application Accepted for Filing and Soliciting Comments, Motions To Intervene, and Competing Applications

On March 1, 2011, Northland Power Mississippi River LLC filed an application, pursuant to section 4(f) of the Federal Power Act, proposing to study the feasibility of hydropower on the Mississippi River, near the town of New Orleans, in Jefferson, and Orleans Parishes, Louisiana. The sole purpose of a preliminary permit, if issued, is to grant the permit holder priority to file a license application during the permit term. A preliminary permit does not authorize the permit holder to perform any land-disturbing activities or otherwise enter upon lands or waters owned by others without the owners' express permission.

The proposed NPI 016A hydrokinetic project would consist of the following: (1) Up to 75 TREK generating units installed in a matrix on the bottom of the river; (2) the total capacity of the installation would be up to 19,000 kilowatts; (3) shielded underwater cables would convey each matrix power to a substation; and (4) a transmission line would interconnect with the power grid. The proposed project would have an average annual generation of 165 gigawatt-hours (GWh), which would be sold to a local utility.

Applicant Contact: Tim Richardson, 30 St. Clair Avenue West, 17th Floor, Toronto, Ontario, Canada; phone (416) 820–9521.

FERC Contact: Michael Spencer, (202) 502–6093.

Deadline for filing comments, motions to intervene, competing applications (without notices of intent), or notices of intent to file competing applications: 60 days from the issuance of this notice. Competing applications and notices of intent must meet the requirements of 18 CFR 4.36. Comments, motions to intervene, notices of intent, and competing applications may be filed electronically via the Internet. See 18 CFR 385.2001(a)(1)(iii) and the instructions on the Commission's Web site *http://www.ferc.gov/docs-filing/efiling.asp.* Commenters can submit brief comments up to 6,000 characters, without prior registration, using the eComment system at *http://www.ferc.gov/docs-filing/ecomment.asp.* You must include your name and contact information at the end of your comments. For assistance, please contact FERC Online Support at *FERCOnlineSupport@ferc.gov;* call toll-free at (866) 208–3676; or, for TTY, contact (202) 502–8659. Although the Commission strongly encourages electronic filing, documents may also be paper-filed. To paper-file, mail an original and seven copies to: Kimberly D. Bose, Secretary, Federal Energy Regulatory Commission, 888 First Street, NE., Washington, DC 20426.

More information about this project, including a copy of the application, can be viewed or printed on the ''eLibrary'' link of the Commission's Web site at *http://www.ferc.gov/docs-filing/elibrary.asp.* Enter the docket number (P–14103–000) in the docket number field to access the document. For assistance, contact FERC Online Support.

Dated: August 18, 2011.

Kimberly D. Bose,

Secretary.

[FR Doc. 2011–21797 Filed 8–25–11; 8:45 am]

BILLING CODE 6717–01–P

DEPARTMENT OF ENERGY

Federal Energy Regulatory Commission

[Project No. 14104–000]

Northland Power Mississippi River LLC; Notice of Preliminary Permit Application Accepted for Filing and Soliciting Comments, Motions To Intervene, and Competing Applications

On March 1, 2011, Northland Power Mississippi River LLC filed an application, pursuant to section 4(f) of the Federal Power Act, proposing to study the feasibility of hydropower on the Mississippi River, near the town of New Orleans, in Jefferson, and Orleans Parishes, Louisiana. The sole purpose of a preliminary permit, if issued, is to grant the permit holder priority to file a license application during the permit term. A preliminary permit does not authorize the permit holder to perform

any land-disturbing activities or otherwise enter upon lands or waters owned by others without the owners' express permission.

The proposed NPI 016B hydrokinetic project would consist of the following: (1) Up to 120 TREK generating units installed in a matrix on the bottom of the river; (2) the total capacity of the installation would be up to 30,000 kilowatts; (3) shielded underwater cables would convey each matrix power to a substation; and (4) a transmission line would interconnect with the power grid. The proposed project would have an average annual generation of 264 gigawatt-hours (GWh), which would be sold to a local utility.

Applicant Contact: Tim Richardson, 30 St. Clair Avenue West, 17th Floor, Toronto, Ontario, Canada; phone (416) 820–9521.

FERC Contact: Michael Spencer, (202) 502–6093.

Deadline for filing comments, motions to intervene, competing applications (without notices of intent), or notices of intent to file competing applications: 60 days from the issuance of this notice. Competing applications and notices of intent must meet the requirements of 18 CFR 4.36. Comments, motions to intervene, notices of intent, and competing applications may be filed electronically via the Internet. See 18 CFR 385.2001(a)(1)(iii) and the instructions on the Commission's Web site *http://www.ferc.gov/docs-filing/efiling.asp.* Commenters can submit brief comments up to 6,000 characters, without prior registration, using the eComment system at *http://www.ferc.gov/docs-filing/ecomment.asp.* You must include your name and contact information at the end of your comments. For assistance, please contact FERC Online Support at *FERCOnlineSupport@ferc.gov;* call toll-free at (866) 208–3676; or, for TTY, contact (202) 502–8659. Although the Commission strongly encourages electronic filing, documents may also be paper-filed. To paper-file, mail an original and seven copies to: Kimberly D. Bose, Secretary, Federal Energy Regulatory Commission, 888 First Street, NE., Washington, DC 20426.

More information about this project, including a copy of the application, can be viewed or printed on the ''eLibrary'' link of the Commission's Web site at *http://www.ferc.gov/docs-filing/elibrary.asp.* Enter the docket number (P–14104–000) in the docket number field to access the document. For assistance, contact FERC Online Support.

Dated: August 18, 2011.

Kimberly D. Bose,

Secretary.

[FR Doc. 2011–21798 Filed 8–25–11; 8:45 am]

BILLING CODE 6717–01–P

DEPARTMENT OF ENERGY

Federal Energy Regulatory Commission

[Project No. 13988–000]

Northland Power Mississippi River LLC; Notice of Preliminary Permit Application Accepted for Filing and Soliciting Comments, Motions To Intervene, and Competing Applications

On January 3, 2011, Northland Power Mississippi River LLC filed an application, pursuant to section 4(f) of the Federal Power Act, proposing to study the feasibility of hydropower on the Mississippi River, near the town of North Vacherie, in St. James Parish, Louisiana. The sole purpose of a preliminary permit, if issued, is to grant the permit holder priority to file a license application during the permit term. A preliminary permit does not authorize the permit holder to perform any land-disturbing activities or otherwise enter upon lands or waters owned by others without the owners' express permission.

The proposed NPI 020 hydrokinetic project would consist of the following: (1) Up to 240 TREK generating units installed in a matrix on the bottom of the river; (2) the total capacity of the installation would be up to 60,000 kilowatts; (3) shielded underwater cables would convey each matrix power to a substation; and (4) a transmission line would interconnect with the power grid. The proposed project would have an average annual generation of 526 gigawatt-hours (GWh), which would be sold to a local utility.

Applicant Contact: Tim Richardson, 30 St. Clair Avenue West, 17th Floor, Toronto, Ontario, Canada; phone (416) 820–9521.

FERC Contact: Michael Spencer, (202) 502–6093.

Deadline for filing comments, motions to intervene, competing applications (without notices of intent), or notices of intent to file competing applications: 60 days from the issuance of this notice. Competing applications and notices of intent must meet the requirements of 18 CFR 4.36. Comments, motions to intervene, notices of intent, and competing applications may be filed electronically via the Internet. See 18 CFR 385.2001(a)(1)(iii) and the instructions on the Commission's Web site *http://www.ferc.gov/docs-filing/efiling.asp.* Commenters can submit brief comments up to 6,000 characters, without prior registration, using the eComment system at *http://www.ferc.gov/docs-filing/ecomment.asp.* You must include your name and contact information at the end of your comments. For assistance, please contact FERC Online Support at *FERCOnlineSupport@ferc.gov;* call toll-free at (866) 208–3676; or, for TTY, contact (202) 502–8659. Although the Commission strongly encourages electronic filing, documents may also be paper-filed. To paper-file, mail an original and seven copies to: Kimberly D. Bose, Secretary, Federal Energy Regulatory Commission, 888 First Street, NE., Washington, DC 20426.

More information about this project, including a copy of the application, can be viewed or printed on the ''eLibrary'' link of the Commission's Web site at *http://www.ferc.gov/docs-filing/elibrary.asp.* Enter the docket number (P–13988–000) in the docket number field to access the document. For assistance, contact FERC Online Support.

Dated: August 18, 2011.

Kimberly D. Bose,

Secretary.

[FR Doc. 2011–21803 Filed 8–25–11; 8:45 am]

BILLING CODE 6717–01–P

DEPARTMENT OF ENERGY

Federal Energy Regulatory Commission

[Project No. 13991–000]

Northland Power Mississippi River LLC; Notice of Preliminary Permit Application Accepted for Filing and Soliciting Comments, Motions To Intervene, and Competing Applications

On January 3, 2011, Northland Power Mississippi River LLC filed an application, pursuant to section 4(f) of the Federal Power Act, proposing to study the feasibility of hydropower on the Mississippi River, near the town of St. Gabriel, in Iberville Parish, Louisiana. The sole purpose of a preliminary permit, if issued, is to grant the permit holder priority to file a license application during the permit term. A preliminary permit does not authorize the permit holder to perform any land-disturbing activities or otherwise enter upon lands or waters owned by others without the owners' express permission.

The proposed NPI 023 hydrokinetic project would consist of the following:

(1) Up to 140 TREK generating units installed in a matrix on the bottom of the river; (2) the total capacity of the installation would be up to 35,000 kilowatts; (3) shielded underwater cables would convey each matrix power to a substation; and (4) a transmission line would interconnect with the power grid. The proposed project would have an average annual generation of 307 gigawatt-hours (GWh), which would be sold to a local utility.

Applicant Contact: Tim Richardson, 30 St. Clair Avenue West 17th Floor, Toronto, Ontario, Canada; phone (416) 820–9521.

FERC Contact: Michael Spencer, (202) 502–6093.

Deadline for filing comments, motions to intervene, competing applications (without notices of intent), or notices of intent to file competing applications: 60 days from the issuance of this notice. Competing applications and notices of intent must meet the requirements of 18 CFR 4.36. Comments, motions to intervene, notices of intent, and competing applications may be filed electronically via the Internet. See 18 CFR 385.2001(a)(1)(iii) and the instructions on the Commission's Web site *http://www.ferc.gov/docs-filing/efiling.asp.* Commenters can submit brief comments up to 6,000 characters, without prior registration, using the eComment system at *http://www.ferc.gov/docs-filing/ecomment.asp.* You must include your name and contact information at the end of your comments. For assistance, please contact FERC Online Support at *FERCOnlineSupport@ferc.gov;* call toll-free at (866) 208–3676; or, for TTY, contact (202) 502–8659. Although the Commission strongly encourages electronic filing, documents may also be paper-filed. To paper-file, mail an original and seven copies to: Kimberly D. Bose, Secretary, Federal Energy Regulatory Commission, 888 First Street, NE., Washington, DC 20426.

More information about this project, including a copy of the application, can be viewed or printed on the ''eLibrary'' link of the Commission's Web site at *http://www.ferc.gov/docs-filing/elibrary.asp.* Enter the docket number (P–13991–000) in the docket number field to access the document. For assistance, contact FERC Online Support.

Dated: August 18, 2011.

Kimberly D. Bose,

Secretary.

[FR Doc. 2011–21806 Filed 8–25–11; 8:45 am]

BILLING CODE 6717–01–P

DEPARTMENT OF ENERGY

Federal Energy Regulatory Commission

[Project No. 14084–000]

Northland Power Mississippi River LLC; Notice of Preliminary Permit Application Accepted for Filing and Soliciting Comments, Motions To Intervene, and Competing Applications

On February 1, 2011, Northland Power Mississippi River LLC filed an application, pursuant to section 4(f) of the Federal Power Act, proposing to study the feasibility of hydropower on the Mississippi River, near the town of St. Gabriel, in West Baton Rouge, East Baton Rouge, and Iberville Parishes, Louisiana. The sole purpose of a preliminary permit, if issued, is to grant the permit holder priority to file a license application during the permit term. A preliminary permit does not authorize the permit holder to perform any land-disturbing activities or otherwise enter upon lands or waters owned by others without the owners' express permission.

The proposed NPI 055 hydrokinetic project would consist of the following: (1) Up to 301 TREK generating units installed in a matrix on the bottom of the river; (2) the total capacity of the installation would be up to 75,000 kilowatts; (3) shielded underwater cables would convey each matrix power to a substation; and (4) a transmission line would interconnect with the power grid. The proposed project would have an average annual generation of 659 gigawatt-hours (GWh), which would be sold to a local utility.

Applicant Contact: Tim Richardson, 30 St. Clair Avenue West, 17th Floor, Toronto, Ontario, Canada; phone (416) 820–9521.

FERC Contact: Michael Spencer, (202) 502–6093.

Deadline for filing comments, motions to intervene, competing applications (without notices of intent), or notices of intent to file competing applications: 60 days from the issuance of this notice. Competing applications and notices of intent must meet the requirements of 18 CFR 4.36. Comments, motions to intervene, notices of intent, and competing applications may be filed electronically via the Internet. See 18 CFR 385.2001(a)(1)(iii) and the instructions on the Commission's Web site *http://www.ferc.gov/docs-filing/efiling.asp.* Commenters can submit brief comments up to 6,000 characters, without prior registration, using the eComment system at *http://www.ferc.gov/docs-filing/ecomment.asp.* You must include your name and contact information at the end of your comments. For assistance, please contact FERC Online Support at *FERCOnlineSupport@ferc.gov;* call toll-free at (866) 208–3676; or, for TTY, contact (202) 502–8659. Although the Commission strongly encourages electronic filing, documents may also be paper-filed. To paper-file, mail an original and seven copies to: Kimberly D. Bose, Secretary, Federal Energy Regulatory Commission, 888 First Street, NE., Washington, DC 20426.

More information about this project, including a copy of the application, can be viewed or printed on the ''eLibrary'' link of the Commission's Web site at *http://www.ferc.gov/docs-filing/elibrary.asp.* Enter the docket number (P–14084–000) in the docket number field to access the document. For assistance, contact FERC Online Support.

Dated: August 18, 2011.

Kimberly D. Bose,

Secretary.

[FR Doc. 2011–21811 Filed 8–25–11; 8:45 am]

BILLING CODE 6717–01–P

DEPARTMENT OF ENERGY

Federal Energy Regulatory Commission

[Project No. 14088–000]

Northland Power Mississippi River LLC; Notice of Preliminary Permit Application Accepted for Filing and Soliciting Comments, Motions To Intervene, and Competing Applications

On January 11, 2011, Northland Power Mississippi River LLC filed an application, pursuant to section 4(f) of the Federal Power Act, proposing to study the feasibility of hydropower on the Mississippi River, near the town of St. Gabriel, in Ascension, and Iberville Parishes, Louisiana. The sole purpose of a preliminary permit, if issued, is to grant the permit holder priority to file a license application during the permit term. A preliminary permit does not authorize the permit holder to perform any land-disturbing activities or otherwise enter upon lands or waters owned by others without the owners' express permission.

The proposed NPI 01 hydrokinetic project would consist of the following: (1) Up to 400 TREK generating units installed in a matrix on the bottom of the river; (2) the total capacity of the installation would be up to 100,000 kilowatts; (3) shielded underwater cables would convey each matrix power

to a substation; and (4) a transmission line would interconnect with the power grid. The proposed project would have an average annual generation of 876 gigawatt-hours (GWh), which would be sold to a local utility.

Applicant Contact: Tim Richardson, 30 St. Clair Avenue West, 17th Floor, Toronto, Ontario, Canada; phone (416) 820–9521.

FERC Contact: Michael Spencer, (202) 502–6093.

Deadline for filing comments, motions to intervene, competing applications (without notices of intent), or notices of intent to file competing applications: 60 days from the issuance of this notice. Competing applications and notices of intent must meet the requirements of 18 CFR 4.36. Comments, motions to intervene, notices of intent, and competing applications may be filed electronically via the Internet. See 18 CFR 385.2001(a)(1)(iii) and the instructions on the Commission's Web site *http://www.ferc.gov/docs-filing/efiling.asp.* Commenters can submit brief comments up to 6,000 characters, without prior registration, using the eComment system at *http://www.ferc.gov/docs-filing/ecomment.asp.* You must include your name and contact information at the end of your comments. For assistance, please contact FERC Online Support at *FERCOnlineSupport@ferc.gov;* call toll-free at (866) 208–3676; or, for TTY, contact (202) 502–8659. Although the Commission strongly encourages electronic filing, documents may also be paper-filed. To paper-file, mail an original and seven copies to: Kimberly D. Bose, Secretary, Federal Energy Regulatory Commission, 888 First Street, NE., Washington, DC 20426.

More information about this project, including a copy of the application, can be viewed or printed on the ''eLibrary'' link of the Commission's Web site at *http://www.ferc.gov/docs-filing/elibrary.asp.* Enter the docket number (P–14088–000) in the docket number field to access the document. For assistance, contact FERC Online Support.

Dated: August 18, 2011.

Kimberly D. Bose,

Secretary.

[FR Doc. 2011–21812 Filed 8–25–11; 8:45 am]

BILLING CODE 6717–01–P

DEPARTMENT OF ENERGY

Federal Energy Regulatory Commission

[Project No. 13993–000]

Northland Power Mississippi River LLC; Notice of Preliminary Permit Application Accepted for Filing and Soliciting Comments, Motions To Intervene, and Competing Applications

On January 3, 2011, Northland Power Mississippi River LLC filed an application, pursuant to section 4(f) of the Federal Power Act, proposing to study the feasibility of hydropower on the Mississippi River, near the town of St. Gabriel, in West Baton Rouge, East Baton Rouge, and Iberville Parishes, Louisiana. The sole purpose of a preliminary permit, if issued, is to grant the permit holder priority to file a license application during the permit term. A preliminary permit does not authorize the permit holder to perform any land-disturbing activities or otherwise enter upon lands or waters owned by others without the owners' express permission.

The proposed NPI 025 hydrokinetic project would consist of the following: (1) Up to 140 TREK generating units installed in a matrix on the bottom of the river; (2) the total capacity of the installation would be up to 35,000 kilowatts; (3) shielded underwater cables would convey each matrix power to a substation; and (4) a transmission line would interconnect with the power grid. The proposed project would have an average annual generation of 307 gigawatt-hours (GWh), which would be sold to a local utility.

Applicant Contact: Tim Richardson, 30 St. Clair Avenue West 17th Floor, Toronto, Ontario, Canada; phone (416) 820–9521.

FERC Contact: Michael Spencer, (202) 502–6093.

Deadline for filing comments, motions to intervene, competing applications (without notices of intent), or notices of intent to file competing applications: 60 days from the issuance of this notice. Competing applications and notices of intent must meet the requirements of 18 CFR 4.36. Comments, motions to intervene, notices of intent, and competing applications may be filed electronically via the Internet. See 18 CFR 385.2001(a)(1)(iii) and the instructions on the Commission's Web site *http://www.ferc.gov/docs-filing/efiling.asp.* Commenters can submit brief comments up to 6,000 characters, without prior registration, using the eComment system at *http://www.ferc.gov/docs-filing/ecomment.asp.* You must include your name and contact information at the end of your comments. For assistance, please contact FERC Online Support at *FERCOnlineSupport@ferc.gov;* call toll-free at (866) 208–3676; or, for TTY, contact (202) 502–8659. Although the Commission strongly encourages electronic filing, documents may also be paper-filed. To paper-file, mail an original and seven copies to: Kimberly D. Bose, Secretary, Federal Energy Regulatory Commission, 888 First Street, NE., Washington, DC 20426.

More information about this project, including a copy of the application, can be viewed or printed on the ''eLibrary'' link of the Commission's Web site at *http://www.ferc.gov/docs-filing/elibrary.asp.* Enter the docket number (P–13993–000) in the docket number field to access the document. For assistance, contact FERC Online Support.

Dated: August 18, 2011.

Kimberly D. Bose,

Secretary.

[FR Doc. 2011–21810 Filed 8–25–11; 8:45 am]

BILLING CODE 6717–01–P

DEPARTMENT OF ENERGY

Federal Energy Regulatory Commission

[Project No. 13990–000]

Northland Power Mississippi River LLC; Notice of Preliminary Permit Application Accepted for Filing and Soliciting Comments, Motions To Intervene, and Competing Applications

On January 3, 2011, Northland Power Mississippi River LLC filed an application, pursuant to section 4(f) of the Federal Power Act, proposing to study the feasibility of hydropower on the Mississippi River, near the town of St. Gabriel, in Iberville Parish, Louisiana. The sole purpose of a preliminary permit, if issued, is to grant the permit holder priority to file a license application during the permit term. A preliminary permit does not authorize the permit holder to perform any land-disturbing activities or otherwise enter upon lands or waters owned by others without the owners' express permission.

The proposed NPI 022 hydrokinetic project would consist of the following: (1) Up to 200 TREK generating units installed in a matrix on the bottom of the river; (2) the total capacity of the installation would be up to 50,000 kilowatts; (3) shielded underwater cables would convey each matrix power

to a substation; and (4) a transmission line would interconnect with the power grid. The proposed project would have an average annual generation of 438 gigawatt-hours (GWh), which would be sold to a local utility.

Applicant Contact: Tim Richardson, 30 St. Clair Avenue West 17th Floor, Toronto, Ontario, Canada; phone (416) 820–9521.

FERC Contact: Michael Spencer, (202) 502–6093.

Deadline for filing comments, motions to intervene, competing applications (without notices of intent), or notices of intent to file competing applications: 60 days from the issuance of this notice. Competing applications and notices of intent must meet the requirements of 18 CFR 4.36. Comments, motions to intervene, notices of intent, and competing applications may be filed electronically via the Internet. See 18 CFR 385.2001(a)(1)(iii) and the instructions on the Commission's Web site *http://www.ferc.gov/docs-filing/efiling.asp*. Commenters can submit brief comments up to 6,000 characters, without prior registration, using the eComment system at *http://www.ferc.gov/docs-filing/ecomment.asp.* You must include your name and contact information at the end of your comments. For assistance, please contact FERC Online Support at *FERCOnlineSupport@ferc.gov;* call toll-free at (866) 208–3676; or, for TTY, contact (202) 502–8659. Although the Commission strongly encourages electronic filing, documents may also be paper-filed. To paper-file, mail an original and seven copies to: Kimberly D. Bose, Secretary, Federal Energy Regulatory Commission, 888 First Street, NE., Washington, DC 20426.

More information about this project, including a copy of the application, can be viewed or printed on the ''eLibrary'' link of the Commission's Web site at *http://www.ferc.gov/docs-filing/elibrary.asp*. Enter the docket number (P–13990–000) in the docket number field to access the document. For assistance, contact FERC Online Support.

Dated: August 18, 2011.

Kimberly D. Bose,

Secretary.

[FR Doc. 2011–21805 Filed 8–25–11; 8:45 am]

BILLING CODE 6717–01–P

DEPARTMENT OF ENERGY

Federal Energy Regulatory Commission

[Project No. 13983–000]

Northland Power Mississippi River LLC; Notice of Preliminary Permit Application Accepted for Filing and Soliciting Comments, Motions To Intervene, and Competing Applications

On January 3, 2011, Northland Power Mississippi River LLC filed an application, pursuant to section 4(f) of the Federal Power Act, proposing to study the feasibility of hydropower on the Mississippi River, near the town of New Orleans, in St. Bernard and Orleans Parishes, Louisiana. The sole purpose of a preliminary permit, if issued, is to grant the permit holder priority to file a license application during the permit term. A preliminary permit does not authorize the permit holder to perform any land-disturbing activities or otherwise enter upon lands or waters owned by others without the owners' express permission.

The proposed NPI 015 hydrokinetic project would consist of the following: (1) Up to 460 TREK generating units installed in a matrix on the bottom of the river; (2) the total capacity of the installation would be up to 115,000 kilowatts; (3) shielded underwater cables would convey each matrix's power to a substation; and (4) a transmission line would interconnect with the power grid. The proposed project would have an average annual generation of 1,007.0 gigawatt-hours (GWh), which would be sold to a local utility.

Applicant Contact: Tim Richardson, 30 St. Clair Avenue West 17th Floor, Toronto, Ontario, Canada; phone (416) 820–9521.

FERC Contact: Michael Spencer, (202) 502–6093.

Deadline for filing comments, motions to intervene, competing applications (without notices of intent), or notices of intent to file competing applications: 60 days from the issuance of this notice. Competing applications and notices of intent must meet the requirements of 18 CFR 4.36. Comments, motions to intervene, notices of intent, and competing applications may be filed electronically via the Internet. See 18 CFR 385.2001(a)(1)(iii) and the instructions on the Commission's Web site *http://www.ferc.gov/docs-filing/efiling.asp.* Commenters can submit brief comments up to 6,000 characters, without prior registration, using the eComment system at *http://www.ferc.gov/docs-filing/ecomment.asp.* You must include your name and contact information at the end of your comments. For assistance, please contact FERC Online Support at *FERCOnlineSupport@ferc.gov;* call toll-free at (866) 208–3676; or, for TTY, contact (202) 502–8659. Although the Commission strongly encourages electronic filing, documents may also be paper-filed. To paper-file, mail an original and seven copies to: Kimberly D. Bose, Secretary, Federal Energy Regulatory Commission, 888 First Street, NE., Washington, DC 20426.

More information about this project, including a copy of the application, can be viewed or printed on the ''eLibrary'' link of the Commission's Web site at http://www.ferc.gov/docs-filing/elibrary.asp. Enter the docket number (P–13983–000) in the docket number field to access the document. For assistance, contact FERC Online Support.

Dated: August 18, 2011.

Kimberly D. Bose,

Secretary.

[FR Doc. 2011–21828 Filed 8–25–11; 8:45 am]

BILLING CODE 6717–01–P

DEPARTMENT OF ENERGY

Federal Energy Regulatory Commission

[Project No. 13987–000]

Northland Power Mississippi River LLC; Notice of Preliminary Permit Application Accepted for Filing and Soliciting Comments, Motions To Intervene, and Competing Applications

On January 3, 2011, Northland Power Mississippi River LLC filed an application, pursuant to section 4(f) of the Federal Power Act, proposing to study the feasibility of hydropower on the Mississippi River, near the town of North Vacherie, in St. James Parish, Louisiana. The sole purpose of a preliminary permit, if issued, is to grant the permit holder priority to file a license application during the permit term. A preliminary permit does not authorize the permit holder to perform any land-disturbing activities or otherwise enter upon lands or waters owned by others without the owners' express permission.

The proposed NPI 019 hydrokinetic project would consist of the following: (1) Up to 200 TREK generating units installed in a matrix on the bottom of the river; (2) the total capacity of the installation would be up to 50,000 kilowatts; (3) shielded underwater cables would convey each matrix power

to a substation; and (4) a transmission line would interconnect with the power grid. The proposed project would have an average annual generation of 438 gigawatt-hours (GWh), which would be sold to a local utility.

Applicant Contact: Tim Richardson, 30 St. Clair Avenue West 17th Floor, Toronto, Ontario, Canada; phone (416) 820–9521.

FERC Contact: Michael Spencer, (202) 502–6093.

Deadline for filing comments, motions to intervene, competing applications (without notices of intent), or notices of intent to file competing applications: 60 days from the issuance of this notice. Competing applications and notices of intent must meet the requirements of 18 CFR 4.36. Comments, motions to intervene, notices of intent, and competing applications may be filed electronically via the Internet. See 18 CFR 385.2001(a)(1)(iii) and the instructions on the Commission's Web site *http://www.ferc.gov/docs-filing/efiling.asp.* Commenters can submit brief comments up to 6,000 characters, without prior registration, using the eComment system at *http://www.ferc.gov/docs-filing/ecomment.asp.* You must include your name and contact information at the end of your comments. For assistance, please contact FERC Online Support at *FERCOnlineSupport@ferc.gov;* call toll-free at (866) 208–3676; or, for TTY, contact (202) 502–8659. Although the Commission strongly encourages electronic filing, documents may also be paper-filed. To paper-file, mail an original and seven copies to: Kimberly D. Bose, Secretary, Federal Energy Regulatory Commission, 888 First Street, NE., Washington, DC 20426.

More information about this project, including a copy of the application, can be viewed or printed on the ''eLibrary'' link of the Commission's Web site at *http://www.ferc.gov/docs-filing/elibrary.asp.* Enter the docket number (P–13987–000) in the docket number field to access the document. For assistance, contact FERC Online Support.

Dated: August 18, 2011.

Kimberly D. Bose,

Secretary.

[FR Doc. 2011–21784 Filed 8–25–11; 8:45 am]

BILLING CODE 6717–01–P

DEPARTMENT OF ENERGY

Federal Energy Regulatory Commission

[Project No. 13981–000]

Northland Power Mississippi River LLC; Notice of Preliminary Permit Application Accepted for Filing and Soliciting Comments, Motions To Intervene, and Competing Applications

On January 3, 2011, Northland Power Mississippi River LLC filed an application, pursuant to section 4(f) of the Federal Power Act, proposing to study the feasibility of hydropower on the Mississippi River, near the town of Point a La Hache, in Plaquemines Parish, Louisiana. The sole purpose of a preliminary permit, if issued, is to grant the permit holder priority to file a license application during the permit term. A preliminary permit does not authorize the permit holder to perform any land-disturbing activities or otherwise enter upon lands or waters owned by others without the owners' express permission.

The proposed NPI 013 hydrokinetic project would consist of the following: (1) Up to 360 TREK generating units installed in a matrix on the bottom of the river; (2) the total capacity of the installation would be up to 90,000 kilowatts; (3) shielded underwater cables would convey each matrix power to a substation; and (4) a transmission line would interconnect with the power grid. The proposed project would have an average annual generation of 788.0 gigawatt-hours (GWh), which would be sold to a local utility.

Applicant Contact: Tim Richardson, 30 St. Clair Avenue West, 17th Floor, Toronto, Ontario, Canada; phone (416) 820–9521.

FERC Contact: Michael Spencer, (202) 502–6093.

Deadline for filing comments, motions to intervene, competing applications (without notices of intent), or notices of intent to file competing applications: 60 days from the issuance of this notice. Competing applications and notices of intent must meet the requirements of 18 CFR 4.36. Comments, motions to intervene, notices of intent, and competing applications may be filed electronically via the Internet. See 18 CFR 385.2001(a)(1)(iii) and the instructions on the Commission's Web site *http://www.ferc.gov/docs-filing/efiling.asp.* Commenters can submit brief comments up to 6,000 characters, without prior registration, using the eComment system at *http://www.ferc.gov/docs-filing/ecomment.asp.* You must include your name and contact information at the end of your comments. For assistance, please contact FERC Online Support at *FERCOnlineSupport@ferc.gov;* call toll-free at (866) 208–3676; or, for TTY, contact (202) 502–8659. Although the Commission strongly encourages electronic filing, documents may also be paper-filed. To paper-file, mail an original and seven copies to: Kimberly D. Bose, Secretary, Federal Energy Regulatory Commission, 888 First Street, NE., Washington, DC 20426.

More information about this project, including a copy of the application, can be viewed or printed on the ''eLibrary'' link of the Commission's Web site at *http://www.ferc.gov/docs-filing/elibrary.asp.* Enter the docket number (P–13981–000) in the docket number field to access the document. For assistance, contact FERC Online Support.

Dated: August 18, 2011.

Kimberly D. Bose,

Secretary.

[FR Doc. 2011–21826 Filed 8–25–11; 8:45 am]

BILLING CODE 6717–01–P

DEPARTMENT OF ENERGY

Federal Energy Regulatory Commission

[Project No. 13992–000]

Northland Power Mississippi River LLC; Notice of Preliminary Permit Application Accepted for Filing and Soliciting Comments, Motions To Intervene, and Competing Applications

On January 3, 2011, Northland Power Mississippi River LLC filed an application, pursuant to section 4(f) of the Federal Power Act, proposing to study the feasibility of hydropower on the Mississippi River, near the town of St. Gabriel, in Iberville Parish, Louisiana. The sole purpose of a preliminary permit, if issued, is to grant the permit holder priority to file a license application during the permit term. A preliminary permit does not authorize the permit holder to perform any land-disturbing activities or otherwise enter upon lands or waters owned by others without the owners' express permission.

The proposed NPI 024 hydrokinetic project would consist of the following: (1) Up to 300 TREK generating units installed in a matrix on the bottom of the river; (2) the total capacity of the installation would be up to 75,000 kilowatts; (3) shielded underwater cables would convey each matrix power to a substation; and (4) a transmission

line would interconnect with the power grid. The proposed project would have an average annual generation of 657 gigawatt-hours (GWh), which would be sold to a local utility.

Applicant Contact: Tim Richardson, 30 St. Clair Avenue West 17th Floor, Toronto, Ontario, Canada; phone (416) 820–9521.

FERC Contact: Michael Spencer, (202) 502–6093.

Deadline for filing comments, motions to intervene, competing applications (without notices of intent), or notices of intent to file competing applications: 60 days from the issuance of this notice. Competing applications and notices of intent must meet the requirements of 18 CFR 4.36. Comments, motions to intervene, notices of intent, and competing applications may be filed electronically via the Internet. See 18 CFR 385.2001(a)(1)(iii) and the instructions on the Commission's Web site *http://www.ferc.gov/docs-filing/efiling.asp.* Commenters can submit brief comments up to 6,000 characters, without prior registration, using the eComment system at *http://www.ferc.gov/docs-filing/ecomment.asp.* You must include your name and contact information at the end of your comments. For assistance, please contact FERC Online Support at *FERCOnlineSupport@ferc.gov;* call toll-free at (866) 208–3676; or, for TTY, contact (202) 502–8659. Although the Commission strongly encourages electronic filing, documents may also be paper-filed. To paper-file, mail an original and seven copies to: Kimberly D. Bose, Secretary, Federal Energy Regulatory Commission, 888 First Street, NE., Washington, DC 20426.

More information about this project, including a copy of the application, can be viewed or printed on the ''eLibrary'' link of the Commission's Web site at *http://www.ferc.gov/docs-filing/elibrary.asp.* Enter the docket number (P–13992–000) in the docket number field to access the document. For assistance, contact FERC Online Support.

Dated: August 18, 2011.

Kimberly D. Bose,

Secretary.

[FR Doc. 2011–21807 Filed 8–25–11; 8:45 am]

BILLING CODE 6717–01–P

DEPARTMENT OF ENERGY

Federal Energy Regulatory Commission

[Project No. 13989–000]

Northland Power Mississippi River LLC; Notice of Preliminary Permit Application Accepted for Filing and Soliciting Comments, Motions To Intervene, and Competing Applications

On January 3, 2011, Northland Power Mississippi River LLC filed an application, pursuant to section 4(f) of the Federal Power Act, proposing to study the feasibility of hydropower on the Mississippi River, in St. James Parish, Louisiana. The sole purpose of a preliminary permit, if issued, is to grant the permit holder priority to file a license application during the permit term. A preliminary permit does not authorize the permit holder to perform any land-disturbing activities or otherwise enter upon lands or waters owned by others without the owners' express permission.

The proposed NPI 021 hydrokinetic project would consist of the following: (1) Up to 200 TREK generating units installed in a matrix on the bottom of the river; (2) the total capacity of the installation would be up to 50,000 kilowatts; (3) shielded underwater cables would convey each matrix power to a substation; and (4) a transmission line would interconnect with the power grid. The proposed project would have an average annual generation of 438 gigawatt-hours (GWh), which would be sold to a local utility.

Applicant Contact: Tim Richardson, 30 St. Clair Avenue West, 17th Floor, Toronto, Ontario, Canada; phone (416) 820–9521.

FERC Contact: Michael Spencer, (202) 502–6093.

Deadline for filing comments, motions to intervene, competing applications (without notices of intent), or notices of intent to file competing applications: 60 days from the issuance of this notice. Competing applications and notices of intent must meet the requirements of 18 CFR 4.36. Comments, motions to intervene, notices of intent, and competing applications may be filed electronically via the Internet. See 18 CFR 385.2001(a)(1)(iii) and the instructions on the Commission's Web site *http://www.ferc.gov/docs-filing/efiling.asp.* Commenters can submit brief comments up to 6,000 characters, without prior registration, using the eComment system at *http://www.ferc.gov/docs-filing/ecomment.asp.* You must include your name and contact information at the end of your comments. For assistance, please contact FERC Online Support at *FERCOnlineSupport@ferc.gov;* call toll-free at (866) 208–3676; or, for TTY, contact (202) 502–8659. Although the Commission strongly encourages electronic filing, documents may also be paper-filed. To paper-file, mail an original and seven copies to: Kimberly D. Bose, Secretary, Federal Energy Regulatory Commission, 888 First Street, NE., Washington, DC 20426.

More information about this project, including a copy of the application, can be viewed or printed on the ''eLibrary'' link of the Commission's Web site at *http://www.ferc.gov/docs-filing/elibrary.asp.* Enter the docket number (P–13989–000) in the docket number field to access the document. For assistance, contact FERC Online Support.

Dated: August 18, 2011.

Kimberly D. Bose,

Secretary.

[FR Doc. 2011–21804 Filed 8–25–11; 8:45 am]

BILLING CODE 6717–01–P

DEPARTMENT OF ENERGY

Federal Energy Regulatory Commission

[Project No. 13986–000]

Northland Power Mississippi River LLC; Notice of Preliminary Permit Application Accepted for Filing and Soliciting Comments, Motions To Intervene, and Competing Applications

On January 3, 2011, Northland Power Mississippi River LLC filed an application, pursuant to section 4(f) of the Federal Power Act, proposing to study the feasibility of hydropower on the Mississippi River, near the town of Edgard, in St. James Parish, Louisiana. The sole purpose of a preliminary permit, if issued, is to grant the permit holder priority to file a license application during the permit term. A preliminary permit does not authorize the permit holder to perform any land-disturbing activities or otherwise enter upon lands or waters owned by others without the owners' express permission.

The proposed NPI 018 hydrokinetic project would consist of the following: (1) Up to 320 TREK generating units installed in a matrix on the bottom of the river; (2) the total capacity of the installation would be up to 80,000 kilowatts; (3) shielded underwater cables would convey each matrix's power to a substation; and (4) a transmission line would interconnect with the power grid. The proposed

project would have an average annual generation of 701.0 gigawatt-hours (GWh), which would be sold to a local utility.

Applicant Contact: Tim Richardson, 30 St. Clair Avenue West 17th Floor, Toronto, Ontario, Canada; phone (416) 820–9521.

FERC Contact: Michael Spencer, (202) 502–6093.

Deadline for filing comments, motions to intervene, competing applications (without notices of intent), or notices of intent to file competing applications: 60 days from the issuance of this notice. Competing applications and notices of intent must meet the requirements of 18 CFR 4.36. Comments, motions to intervene, notices of intent, and competing applications may be filed electronically via the Internet. See 18 CFR 385.2001(a)(1)(iii) and the instructions on the Commission's Web site *http://www.ferc.gov/docs-filing/efiling.asp.* Commenters can submit brief comments up to 6,000 characters, without prior registration, using the eComment system at *http://www.ferc.gov/docs-filing/ecomment.asp.* You must include your name and contact information at the end of your comments. For assistance, please contact FERC Online Support at *FERCOnlineSupport@ferc.gov;* call toll-free at (866) 208–3676; or, for TTY, contact (202) 502–8659. Although the Commission strongly encourages electronic filing, documents may also be paper-filed. To paper-file, mail an original and seven copies to: Kimberly D. Bose, Secretary, Federal Energy Regulatory Commission, 888 First Street, NE., Washington, DC 20426.

More information about this project, including a copy of the application, can be viewed or printed on the ''eLibrary'' link of the Commission's Web site at *http://www.ferc.gov/docs-filing/elibrary.asp.* Enter the docket number (P–13986–000) in the docket number field to access the document. For assistance, contact FERC Online Support.

Dated: August 18, 2011.

Kimberly D. Bose,

Secretary.

[FR Doc. 2011–21830 Filed 8–25–11; 8:45 am]

BILLING CODE 6717–01–P

DEPARTMENT OF ENERGY

Federal Energy Regulatory Commission

[Project No. 13985–000]

Northland Power Mississippi River LLC; Notice of Preliminary Permit Application Accepted for Filing and Soliciting Comments, Motions To Intervene, and Competing Applications

On January 3, 2011, Northland Power Mississippi River LLC filed an application, pursuant to section 4(f) of the Federal Power Act, proposing to study the feasibility of hydropower on the Mississippi River, near the town of New Orleans, in Jefferson and Orleans Parishes, Louisiana. The sole purpose of a preliminary permit, if issued, is to grant the permit holder priority to file a license application during the permit term. A preliminary permit does not authorize the permit holder to perform any land-disturbing activities or otherwise enter upon lands or waters owned by others without the owners' express permission.

The proposed NPI 017 hydrokinetic project would consist of the following: (1) Up to 180 TREK generating units installed in a matrix on the bottom of the river; (2) the total capacity of the installation would be up to 45,000 kilowatts; (3) shielded underwater cables would convey each matrix's power to a substation; and (4) a transmission line would interconnect with the power grid. The proposed project would have an average annual generation of 394.0 gigawatt-hours (GWh), which would be sold to a local utility.

Applicant Contact: Tim Richardson, 30 St. Clair Avenue West 17th Floor, Toronto, Ontario, Canada; phone (416) 820–9521.

FERC Contact: Michael Spencer, (202) 502–6093.

Deadline for filing comments, motions to intervene, competing applications (without notices of intent), or notices of intent to file competing applications: 60 days from the issuance of this notice. Competing applications and notices of intent must meet the requirements of 18 CFR 4.36. Comments, motions to intervene, notices of intent, and competing applications may be filed electronically via the Internet. See 18 CFR 385.2001(a)(1)(iii) and the instructions on the Commission's Web site *http://www.ferc.gov/docs-filing/efiling.asp.* Commenters can submit brief comments up to 6,000 characters, without prior registration, using the eComment system at *http://www.ferc.gov/docs-filing/ecomment.asp.* You must include your name and contact information at the end of your comments. For assistance, please contact FERC Online Support at *FERCOnlineSupport@ferc.gov;* call toll-free at (866) 208–3676; or, for TTY, contact (202) 502–8659. Although the Commission strongly encourages electronic filing, documents may also be paper-filed. To paper-file, mail an original and seven copies to: Kimberly D. Bose, Secretary, Federal Energy Regulatory Commission, 888 First Street, NE., Washington, DC 20426.

More information about this project, including a copy of the application, can be viewed or printed on the ''eLibrary'' link of the Commission's Web site at *http://www.ferc.gov/docs-filing/elibrary.asp.* Enter the docket number (P–13985–000) in the docket number field to access the document. For assistance, contact FERC Online Support.

Dated: August 18, 2011.

Kimberly D. Bose,

Secretary.

[FR Doc. 2011–21829 Filed 8–25–11; 8:45 am]

BILLING CODE 6717–01–P

DEPARTMENT OF ENERGY

Federal Energy Regulatory Commission

[Docket No. RM10–23–000]

Transmission Planning and Cost Allocation by Transmission Owning and Operating Public Utilities; Notice of Staff Informational Conferences

Take notice that Commission staff will convene three informational conferences to discuss the requirements of Order No. 1000.[1] The Commission directed its staff to hold the informational conferences to assist public utility transmission providers in their efforts to comply with Order No. 1000.[2]

The first informational conference will be held on Monday, September 12, 2011, beginning at 1 p.m. (EDT) and will focus on compliance issues related to Regional Transmission Organizations (RTOs) and Independent System Operators (ISOs). The first informational conference is scheduled to end by 4 p.m. (EDT).

The second informational conference will be held on Tuesday, September 13, 2011, beginning at 9 a.m. (EDT) and will

[1] *Transmission Planning and Cost Allocation by Transmission Owning and Operating Public Utilities,* Order No. 1000, 76 FR 49,842 (Aug. 11, 2011), 136 FERC ¶ 61,051 (2011).

[2] *Id.* P 14.

focus on compliance issues related to non-RTO/ISO regions in the Eastern Interconnection. The second informational conference is scheduled to end by 12 p.m. (EDT).

The third informational conference will also be held on Tuesday, September 13, 2011, beginning at 1 p.m. (EDT) and will focus on compliance issues related to non-RTO/ISO regions in the Western Interconnection. The third informational conference is scheduled to end by 4 p.m. (EDT).

All of the informational conferences will be held in the Commission Meeting Room at the Commission's Washington, DC headquarters, 888 First Street, NE. Commission staff will lead the informational conferences and give presentations on various aspects of Order No. 1000. All interested parties are invited to attend and there will be an opportunity to ask questions.

A free webcast of the informational conferences will be available through the FERC Web site. Anyone with Internet access that is interested in viewing the webcast of an informational conference can do so by navigating to Calendar of Events at *http://www.ferc.gov.* The events will contain a link to the webcast. The Capitol Connection provides technical support for the webcasts and offers the option of listening to the conferences via phone-bridge for a fee. If you have any questions, visit *http://www.CapitolConnection.org* or call (703) 993–3100. The conferences will not be transcribed.

Interested parties may also participate at the informational conferences by phone. There is no fee to participate by phone, but registration is required. To participate by phone, please complete the teleconference registration form at *https://www.ferc.gov/whats-new/registration/trans-plan-9-12-11-form.asp.* Dial-in information will be e-mailed to registered teleconference participants. No registration is required to attend the informational conferences in-person or to watch the webcast.

FERC conferences are accessible under section 508 of the Rehabilitation Act of 1973. For accessibility accommodations please send an e-mail to *accessibility@ferc.gov* or call toll free (866) 208–3372 (voice) or (202) 502–8659 (TTY), or send a fax to (202) 208–2106 with the required accommodations.

For further information about this conference, please contact:

Partha Malvadkar, Office of Energy Market Regulation, (202) 502–6332, *partha.malvadkar@ferc.gov.*

Zeny Magos, Office of Energy Market Regulation, (202) 502–8244, *zeny.magos@ferc.gov.*

Dated: August 18, 2011.

Kimberly D. Bose,

Secretary.

[FR Doc. 2011–21801 Filed 8–25–11; 8:45 am]

BILLING CODE 6717–01–P

ENVIRONMENTAL PROTECTION AGENCY

[EPA–HQ–OPP–2009–0639; FRL–8883–6]

2-(Hydroxymethyl)-2-nitro-1,3-propanediol (Tris Nitro); Amendments To Terminate Uses for Certain Pesticide Registrations

AGENCY: Environmental Protection Agency (EPA).

ACTION: Notice.

SUMMARY: This notice announces EPA's order for the amendments to terminate uses, voluntarily requested by the registrant and accepted by the Agency, of products containing the pesticide listed in Table 1, pursuant to section 6(f)(1) of the Federal Insecticide, Fungicide, and Rodenticide Act (FIFRA), as amended. This cancellation order follows a June 8, 2011 **Federal Register** Notice of Receipt of Requests from the registrant listed in Table 1 to voluntarily amend to terminate uses of these product registrations. These are not the last products containing these pesticides registered for use in the United States. In the June 8, 2011 notice, EPA indicated that it would issue an order implementing the amendments to terminate uses, unless the Agency received substantive comments within the 30-day comment period that would merit its further review of these requests, or unless the registrant withdrew their requests within this period. The Agency did not receive any comments on the notice. Further, the registrant did not withdraw their requests. Accordingly, EPA hereby issues in this notice a cancellation order granting the requested amendments to terminate uses. Any distribution, sale, or use of the products subject to this cancellation order is permitted only in accordance with the terms of this order, including any existing stocks provisions.

DATES: The cancellations are effective August 26, 2011.

FOR FURTHER INFORMATION CONTACT: Rebecca von dem Hagen, Antimicrobials Division (7510P), Office of Pesticide Programs, Environmental Protection Agency, 1200 Pennsylvania Ave., NW., Washington, DC 20460–0001; telephone number: (703) 305–6785; e-mail address: *vondem-hagen.rebecca@epa.gov.*

SUPPLEMENTARY INFORMATION:

I. General Information

A. Does this action apply to me?

This action is directed to the public in general, and may be of interest to a wide range of stakeholders including environmental, human health, and agricultural advocates; the chemical industry; pesticide users; and members of the public interested in the sale, distribution, or use of pesticides. Since others also may be interested, the Agency has not attempted to describe all the specific entities that may be affected by this action. If you have any questions regarding the applicability of this action to a particular entity, consult the person listed under **FOR FURTHER INFORMATION CONTACT**.

B. How can I get copies of this document and other related information?

EPA has established a docket for this action under docket identification (ID) number EPA–HQ–OPP–2009–0639. Publicly available docket materials are available either in the electronic docket at *http://www.regulations.gov*, or, if only available in hard copy, at the Office of Pesticide Programs (OPP) Regulatory Public Docket in Rm. S–4400, One Potomac Yard (South Bldg.), 2777 S. Crystal Dr., Arlington, VA. The hours of operation of this Docket Facility are from 8:30 a.m. to 4 p.m., Monday through Friday, excluding legal holidays. The Docket Facility telephone number is (703) 305–5805.

II. What action is the agency taking?

This notice announces the amendments to terminate uses, as requested by the registrant, of products registered under section 3 of FIFRA. These registrations are listed in sequence by registration number in Table 1 of this unit.

TABLE 1—TRIS NITRO PRODUCT REGISTRATION AMENDMENTS TO TERMINATE USES

Registration No.	Product name	Company	Uses to be terminated
464–657	Tris Nitro ™ Solid Industrial Bacteriostat.	The Dow Chemical Company	Use in metalworking fluids; Latex paints; Resin/latex/polymer emulsions; Specialty industrial products.
464–658	Tris Nitro ™ Brand of 50% AqueousTris (hydroxymethyl) nitromethane.	The Dow Chemical Company	Use in metalworking fluids; Latex paints; Resin/latex/polymer emulsions; Specialty industrial products.
464–663	Tris Nitro™ Brand of 50% Aqueous Tris (hydroxymethyl) nitromethane.	The Dow Chemical Company	Use in paints, emulsions and thickener solutions; Use in metalworking fluids; Use as a preservative for packaged emulsions, solutions, or suspensions, such as detergents and polishes containing water.
464–668	Tris Nitro™ Brand of 25% Aqueous Tris (hydroxymethyl) nitromethane.	The Dow Chemical Company	Use in metalworking fluids; Use as a preservative for packaged emulsions, solutions, or suspensions, such as detergents and polishes containing water.
464–679	Tris Nitro™ Brand	The Dow Chemical Company	Use in paints, emulsions, and thickener solutions; Use in metalworking fluids; Use as a preservative for packaged emulsions, solutions, or suspensions, such as detergents and polishes containing water; Use in pulp and paper-mill process water systems.

Table 2 of this unit includes the name and address of record for the registrant of the products in Table 1 of this unit, in sequence by EPA company number.

TABLE 2—REGISTRANT OF AMENDED PRODUCTS

EPA company No.	Company name and address
464	The Dow Chemical Company, 1803 Building, Midland, MI 48674.

III. Summary of Public Comments Received and Agency Response to Comments

During the public comment period provided, EPA received no comments in response to the June 8, 2011 **Federal Register** notice (76 FR 33281) (FRL–8874–5) announcing the Agency's receipt of the requests for voluntary amendments to terminate uses of products listed in Table 1.

IV. Cancellation Order

Pursuant to FIFRA section 6(f), EPA hereby approves the requested amendments to terminate uses of Tris Nitro registrations identified in Table 1 of Unit II. Accordingly, the Agency orders that the product registrations identified in Table 1 of Unit II. are hereby amended to terminate the affected uses. Any distribution, sale, or use of existing stocks of the products identified in Table 1 of Unit II. in a manner inconsistent with any of the Provisions for Disposition of Existing Stocks set forth in Unit VI. will be considered a violation of FIFRA.

V. What is the agency's authority for taking this action?

Section 6(f)(1) of FIFRA provides that a registrant of a pesticide product may at any time request that any of its pesticide registrations be canceled or amended to terminate one or more uses. FIFRA further provides that, before acting on the request, EPA must publish a notice of receipt of any such request in the **Federal Register**. Thereafter, following the public comment period, the Administrator may approve such a request.

VI. Provisions for Disposition of Existing Stocks

EPA's existing stocks policy that published in the **Federal Register** June 26, 1991 (56 FR 29362) (FRL–3845–4) provides that: ''If a registrant requests to voluntarily cancel a registration where the Agency has identified no particular risk concerns, the registrant has complied with all applicable conditions of reregistration, conditional registration, and data call ins, and the registration is not subject to a Registration Standard, Label Improvement Program, or reregistration decision, the Agency will generally permit a registrant to sell or distribute existing stocks for 1 year after the cancellation request was received. Persons other than registrants will generally be allowed to sell, distribute, or use existing stocks until such stocks are exhausted.''

Existing stocks are those stocks of registered pesticide products which are currently in the United States and which were packaged, labeled, and released for shipment prior to the effective date of the cancellation action. The effective date of this cancellation is August 26, 2011. The cancellation order that is the subject of this notice includes the following existing stock provisions:

The registrant may sell and distribute existing stocks of products listed in Table 1 until August 27, 2012. Persons other than the registrant may sell and distribute existing stocks of products listed in Table 1 until exhausted. Use of the products listed in Table 1 may continue until existing stocks are exhausted, provided that such use is consistent with the terms of the previously approved labeling on, or that accompanied, the amended products.

List of Subjects

Environmental protection, Pesticides and pests, Antimicrobials, 2-(hydroxymethyl)-2-nitro-1,3-propanediol, Tris Nitro.

Dated: August 17, 2011.

Joan Harrigan-Farrelly,

Director, Antimicrobials Division, Office of Pesticide Programs.

[FR Doc. 2011–21729 Filed 8–25–11; 8:45 am]

BILLING CODE 6560–50–P

ENVIROMENTAL PROTECTION AGENCY

[FRL–9457–3]

Clean Air Act Operating Permit Program; Response to Petition To Reopen the 2001 Title V Permit for Reliant Portland Generating Station, Upper Mount Bethel Township, Northampton County, PA

AGENCY: Environmental Protection Agency (EPA).

ACTION: Notice of action denying petition to reopen Title V permit.

SUMMARY: Pursuant to the Clean Air Act (CAA), the Director of the EPA Region III Air Protection Division issued a letter, dated July 8, 2011, denying a petition, filed by New Jersey, asking that EPA reopen the 2001 Title V permit issued by the Pennsylvania Department of Environmental Protection (PADEP) to Reliant Energy Mid-Atlantic Power Holdings, LLC, for its Portland Generating Station in Northampton County, Pennsylvania.

FOR FURTHER INFORMATION CONTACT: Kathleen Cox, Associate Director, Office of Permits and Air Toxics, Air Protection Division, EPA Region III (3AP10), telephone (215) 814–2173; e-mail: *cox.kathleen@epa.gov.*

SUPPLEMENTARY INFORMATION:

I. How can I get copies of this document and other related information?

Copies of the letter responding to the Petition to Reopen, the Petition to Reopen and attachments to the Petition, and other relevant documents relating thereto are on file at the following location: Environmental Protection Agency, Region III, Air Protection Division (APD), 1650 Arch Street, Philadelphia, Pennsylvania 19103.

II. Background

On or about July 23, 2009, the New Jersey Attorney General's Office filed a petition to reopen the 2001 Title V permit issued to the Reliant Portland Generating Station in Northampton County, Pennsylvania. The petition to reopen followed a 2006 petition by New Jersey under Section 505(b)(2) of the Clean Air Act asking EPA to object to the issuance of a new Title V permit to Reliant Portland, and a subsequent 2008 petition from New Jersey asking EPA to reconsider its 2007 denial of the Petition to Object. EPA denied the petition for reconsideration. New Jersey also filed an appeal of EPA's initial denial of the petition to object, and an appeal of EPA's denial of the petition to reconsider, in the U.S. Court of Appeals for Third Circuit. Under the terms of a settlement agreement between EPA and New Jersey, New Jersey dismissed with prejudice its appeals and the United States agreed to respond to the petition to reopen within one year. This letter is EPA's response to the petition to reopen.

III. Judicial Review

Section 307(b)(1) of the Clean Air Act indicates which Federal Courts of Appeals have venue for petitions for review of final actions by EPA. For final actions which are not nationally applicable, Section 307(b)(1) provides that appeals shall be filed in the United States Court of Appeals for the appropriate circuit. The denial of New Jersey's petition to reopen the 2001 Title V permit for the Reliant Portland Generating Station is a final action which is not nationally applicable. The Third Circuit Court of Appeals is the appropriate court of appeals. Section 307(b)(1) also requires that any petition for review must be filed within sixty (60) days from the date that this Notice is published in the **Federal Register**.

Dated: August 9, 2011.

W.C. Early,

Acting Regional Administrator, Region III.

[FR Doc. 2011–21933 Filed 8–25–11; 8:45 am]

BILLING CODE 6560–50–P

ENVIRONMENTAL PROTECTION AGENCY

[ER–FRL–8998–7]

Environmental Impacts Statements; Notice of Availability

Responsible Agency: Office of Federal Activities, General Information (202) 564–1399 or *http://www.epa.gov/compliance/nepa/*.

Weekly receipt of Environmental Impact Statements.

Filed 08/15/2011 through 08/19/2011.

Pursuant to 40 CFR 1506.9.

Notice

In accordance with Section 309(a) of the Clean Air Act, EPA is required to make its comments on EISs issued by other Federal agencies public. Historically, EPA met this mandate by publishing weekly notices of availability of EPA comments, which includes a brief summary of EPA's comment letters, in the **Federal Register**. Since February 2008, EPA has included its comment letters on EISs on its Web site at: *http://www.epa.gov/compliance/nepa/eisdata.html.* Including the entire EIS comment letters on the Web site satisfies the Section 309(a) requirement to make EPA's comments on EISs available to the public. Accordingly, on March 31, 2010, EPA discontinued the publication of the notice of availability of EPA comments in the **Federal Register**.

EIS No. 20110272, Draft EIS, FWS, AK, Arctic National Wildlife Refuge Project, Draft Revised Comprehensive Conservation Plan, Wilderness Review, Wild and Scenic River Review, Implementation, Fairbanks, AL, Comment Period Ends: 11/23/2011, Contact: Sharon Seim 907–456–0501.

EIS No. 20110273, Final EIS, FERC, CA, Kilarc-Cow Creek Hydroeletric Project, (FERC Project No. 606) Proposes to Surrender the License for Operation Project, Old Crow Creek and South Cow Creek, Shasta County, CA, Wait Period Ends: 09/26/2011, Contact: Leonard Tao 1–866–208–3372.

EIS No. 20110274, Draft EIS, USFS, CA, Barren Ridge Renewable Transmission Project, Construction and Operation, Application to the USFS for a Special Use Authorization and to BLM for Right-of-Way Grant, Kern and Los Angeles Counties, CA, Comment Period Ends: 10/25/2011, Contact: Robert Hawkins 707–562–8699.

EIS No. 20110275, Second Draft Supplement, FWS, CA, Southern Sea Otters (Enhydra lutris nereis) Translocation Program, Updated Information to the DSEIS 2005, San Nicolas Island, Southern California Bight, CA, Comment Period Ends: 10/24/2011, Contact: Lilian Carswell 805–644–1766.

EIS No. 20110276, Draft EIS, BLM, AZ, Lower Sonoran and Sonoran Desert National Monument, Resource Management Plan, To Provide Guidance for Managing the Use of Public Lands and Provide a Framework for Future Land Management Actions, Maricopa, Pinal, Pima, Gila and Yuma Counties, AZ, Comment Period Ends: 11/23/2011, Contact: Penny Foreman 653–580–5528.

EIS No. 20110277, Draft Supplement, USFS, CO, San Juan Plan Revision, Updated Information, San Juan Public Lands, Draft Land Management Plan (DLMP), Implementation, San Juan National Forest, Archuleta, Conejos, Dolores, Hinsdale, LaPlata, Mineral, Montezuma, Montrose, Rio Grande, San Juan and San Miguel Counties, CO, Comment Period Ends: 10/11/2011, Contact: Shannon Manfredi 970–385–1229.

EIS No. 20110278, Final EIS, NPS, AK, Nabesna Off-Road Vehicle Management Plan, Implementation, Wrangell-St. Elias National Park and Preserve, AK, Wait Period Ends: 09/26/2011, Contact: Bruce Rogers 907–822–7276.

EIS No. 20110279, Final Supplement, MMS, AK, Chukchi Sea Planning Area, Oil and Gas Lease Sale 193, Revised Information, Analyzing the Environmental Impact of Natural Gas Development and Evaluate Incomplete, Missing, and Unavailable Information, Chukchi Sea, Alaska Outer Continental Shelf, AK, Wait Period Ends: 09/26/2011, Contact: Tim Holder 703–787–1744.

EIS No. 20110280, Final EIS, NOAA, NC, Gray's Reef National Marine Sanctuary (GRNMS) Research Areas Designation, Establish a Research Area, Implementation, NC, Wait Period Ends: 09/26/2011, Contact: George Sedberry 912–598–2345.

Amended Notices

EIS No. 20110174, Draft EIS, USFS, 00, George Washington National Forest Land and Resource Management Project, Implementation, Alleghany, Amherst, Augusta, Bath, Botetourt, Frederick, Highland, Nelson, Page, Rockbridge, Rockingham, Shenandoah, and Warren Counties, VA and Hampshire, Hardy, Monroe, and Pendleton Counties, WV, Comment Period Ends: 10/17/2011, Contact: Karen Overcash 540–265–5175. Revision to FR Notice Published 06/03/2011: Extending Comment Period from 09/01/2011 to 10/17/2011.

Dated: August 23, 2011.

Cliff Rader,

Acting Director, NEPA Compliance Division, Office of Federal Activities.

[FR Doc. 2011–21937 Filed 8–25–11; 8:45 am]

BILLING CODE 6560–50–P

ENVIRONMENTAL PROTECTION AGENCY

[EPA–HQ–OPP–2009–0879; FRL–8885–9]

Exposure Modeling Public Meeting; Notice of Public Meeting

AGENCY: Environmental Protection Agency (EPA).

ACTION: Notice.

SUMMARY: An Exposure Modeling Public Meeting (EMPM) will be held for one day on September 20, 2011. This notice announces the location and time for the meeting and sets forth the tentative agenda topics.

DATES: The meeting will be held on September 20, 2011 from 9 a.m. to 4:30 p.m. Requests to participate in the meeting must be received on or before September 6, 2011. To request accommodation of a disability, please contact the person listed under **FOR FURTHER INFORMATON CONTACT**, preferably at least 10 days prior to the meeting, to give EPA as much time as possible to process your request.

ADDRESSES: The meeting will be held at the Environmental Protection Agency, Office of Pesticide Programs (OPP), One Potomac Yard (South Building), Fourth Floor Conference Center (S–4370–80), 2777 S. Crystal Drive, Arlington, VA 22202.

FOR FURTHER INFORMATION CONTACT: Andrew Shelby, Environmental Fate and Effects Division (7507P), Office of Pesticide Programs, Environmental Protection Agency, 1200 Pennsylvania Ave., NW., Washington, DC 20460–0001; *telephone number:* (703) 347–0119; *fax number:* (703) 305–6309; *e-mail address: shelby.andrew@epa.gov.*

SUPPLEMENTARY INFORMATION:

I. General Information

A. Does this action apply to me?

You may be potentially affected by this action if you are required to conduct testing of chemical substances under the Toxic Substances Control Act (TSCA), the Federal Food, Drug, and Cosmetic Act (FFDCA), or the Federal Insecticide, Fungicide, and Rodenticide Act (FIFRA). Since other entities may also be interested, the Agency has not attempted to describe all the specific entities that may be affected by this action. If you have any questions regarding the applicability of this action to a particular entity, consult the person listed under **FOR FURTHER INFORMATION CONTACT**.

B. How can I get copies of this document and other related information?

EPA has established a docket for this action under docket ID number EPA–HQ–OPP–2009–0879. Publicly available docket materials are available either in the electronic docket at *http://www.regulations.gov,* or, if only available in hard copy, at the Office of Pesticide Programs (OPP) Regulatory Public Docket in Rm. S–4400, One Potomac Yard (South Bldg.), 2777 S. Crystal Dr., Arlington, VA. The hours of operation of this Docket Facility are from 8:30 a.m. to 4 p.m., Monday through Friday, excluding legal holidays. The Docket Facility telephone number is (703) 305–5805.

II. Background

On a biannual interval, an Exposure Modeling Public Meeting will be held for presentation and discussion of current issues related to modeling pesticide fate, transport, and exposure in risk assessment in a regulatory context. Meeting dates and abstract requests are announced through the ''empmlist'' forum on the LYRIS list server at *https://lists.epa.gov/read/all_forums/.*

III. How can I request to participate in this meeting?

You may submit a request to participate in this meeting to the person listed under **FOR FURTHER INFORMATION CONTACT**. Do not submit any information in your request that is considered CBI. Requests to participate in the meeting, identified by docket ID number EPA–HQ–OPP–2009–0879, must be received on or before September 6, 2011.

IV. Tentative Topics for the Meeting

Tentative topics for the meeting will include presentations related to aquatic exposure modeling and monitoring. Specifically, presentations will include the following:

1. Use-Exposure Relationships of Pesticides for Aquatic Risk Assessment.
2. Refinements to the USEPA Tier II Drinking Water Risk Assessment Guidance: Addressing Atypical Use Patterns.
3. Generalized Haber's Law for Exponential Concentration Decline with Application to Riparian-Aquatic Pesticide Ecotoxicity.
4. Pesticide Aquatic Exposure Scenarios and Modeling for Juvenile Pacific Salmonid Flood Plain Habitat.
5. Regional Analysis of the Environmental Risk with the GIS-Base Pesticide Risk Indicator SYNOPS.
6. Herbicide Volatilization Trumps Runoff Losses: A Multiyear Investigation.
7. Implementation of Drift Fractions Generated by Spray Drift Models for Exposure and Risk Assessments.
8. Percent Crop Area (PCA) Project Update.
9. Tier II Groundwater Model (PRZM–GW) Project Update.
10. Spatial Aquatic Model (SAM) Project Update.
11. Atrazine Scientific Advisory Panel (SAP) Meeting Summary.

List of Subjects

Environmental protection, Modeling, Monitoring, Spray drift, Ground water, Aquatic risk assessment, Salmonid, Atrazine, Spatial aquatic model, Pesticides.

Dated: August 22, 2011.

Arthur-Jean Williams,

Acting Director, Environmental Fate and Effects Division, Office of Pesticide Programs.

[FR Doc. 2011–21954 Filed 8–25–11; 8:45 am]

BILLING CODE 6560–50–P

FEDERAL COMMUNICATIONS COMMISSION

Privacy Act System of Records

AGENCY: Federal Communications Commission (FCC, Commission, or the Agency).

ACTION: Notice; one new Privacy Act system of records; two deleted systems of records.

SUMMARY: Pursuant to subsection (e)(4) of the *Privacy Act of 1974,* as amended (''Privacy Act''), 5 U.S.C. 552a, the FCC proposes to add one new, consolidated system of records, FCC/OIG–3, ''Investigative Files.'' FCC/OIG–3, ''Investigative Files'' will incorporate the information, *e.g.,* personally identifiable information (PII), presently covered by two OIG systems of records, FCC/OIG–1, ''Criminal Investigative Files,'' and FCC/OIG–2, ''General Investigative Files,'' and also add new and updated information that pertains to the mission and activities of the FCC's Office of Inspector General (OIG). Upon both the approval and deployment of FCC/OIG–3, the Commission will cancel FCC/OIG–1 and FCC/OIG–2. The purposes for adding this new system of records, FCC/OIG–3, ''Investigative Files,'' are for the OIG to use the records in this system of records to pursuant to the Inspector General Act of 1978, as amended, for the purposes of:

Conducting and documenting investigations initiated and/or referred by or to OIG or other investigative agencies regarding FCC programs and operations and reporting the results of investigations to other Federal agencies, other public authorities or professional organizations that have the authority to bring criminal prosecutions or civil or administrative actions, or to impose other disciplinary sanctions;

Documenting the outcome of OIG investigations;

Maintaining a record of the activities that were the subject of investigations;

Reporting investigative findings to the Commission management about problems and deficiencies in the FCC's programs and operations or to suggest corrective action in reference to identified irregularities, problems or deficiencies;

Maintaining a record of complaints and allegations received relative to FCC programs and operations and documenting the outcome of OIG reviews of those complaints and allegations;

Coordinating relationships with other Federal agencies, State and local governmental agencies, and nongovernmental entities in matters relating to the statutory responsibilities of the OIG; and

Acting as a repository and source for information necessary to fulfill the reporting requirements of the Inspector General Act of 1978, as amended.

The new system of records will consolidate the systems of records that the OIG currently uses to house all of its criminal and general investigative files with PII data in the various OIG information systems in a single OIG investigative files system of records.

DATES: In accordance with subsections (e)(4) and (e)(11) of the Privacy Act, any interested person may submit written comments concerning the proposed new system of records on or before September 26, 2011. The Office of Information and Regulatory Affairs (OIRA), Office of Management and Budget (OMB), which has oversight responsibility under the Privacy Act to review the system of records, and Congress may submit comments on or before October 5, 2011. The proposed new system of records will become effective on October 5, 2011 unless the FCC receives comments that require a contrary determination. The Commission will publish a document in the **Federal Register** notifying the public if any changes are necessary. As required by 5 U.S.C. 552a(r) of the Privacy Act, the FCC is submitting reports on this proposed new system to OMB and Congress.

ADDRESSES: Address comments to Leslie F. Smith, Privacy Analyst, Performance Evaluation and Records Management (PERM), Room 1–C216, Federal Communications Commission (FCC), 445 12th Street, SW., Washington, DC 20554, (202) 418–0217, or via the Internet at *Leslie.Smith@fcc.gov.*

FOR FURTHER INFORMATION CONTACT: Leslie F. Smith, Performance Evaluation and Records Management (PERM), Room 1–C216, Federal Communications Commission, 445 12th Street, SW., Washington, DC 20554, (202) 418–0217 or via the Internet at *Leslie.Smith@fcc.gov.*

SUPPLEMENTARY INFORMATION: As required by the *Privacy Act of 1974,* as amended, 5 U.S.C. 552a(e)(4) and (e)(11), this document sets forth notice of this proposed new system of records maintained by the FCC. The FCC previously gave complete notice of the two systems of records, FCC/OIG–1, ''Criminal Investigative Files'' and FCC/OIG–2, ''General Investigative Files,'' which it intends to cancel upon both the approval and deployment of FCC/OIG–3, ''Investigative Files,'' as referenced under this Notice by publication in the **Federal Register** on April 5, 2006 (71 FR 17234, 17245 and 17246 respectively). This notice is a summary of the more detailed information about the proposed new system of records, which may be viewed at the location given above in the **ADDRESSES** section. The purposes for adding this new system of records, FCC/OIG–3, ''Investigative Files,'' are for the FCC's Office of Inspector General (OIG) to use the records in FCC/OIG–3 pursuant to the Inspector General Act of 1978, as amended, for the purposes of:

1. Conducting and documenting investigations initiated and/or referred by or to the OIG or other investigative agencies regarding FCC programs and operations and reporting the results of investigations to other Federal agencies, other public authorities or professional organizations that have the authority to bring criminal prosecutions or civil or administrative actions, or to impose other disciplinary sanctions;

2. Documenting the outcome of OIG investigations;

3. Maintaining a record of the activities that were the subject of investigations;

4. Reporting investigative findings to the Commission management about problems and deficiencies in the FCC's programs and operations or to suggest corrective action in reference to identified irregularities, problems or deficiencies;

5. Maintaining a record of complaints and allegations received relative to FCC programs and operations and documenting the outcome of OIG reviews of those complaints and allegations;

6. Coordinating relationships with other Federal agencies, State and local governmental agencies, and nongovernmental entities in matters relating to the statutory responsibilities of the OIG; and

7. Acting as a repository and source for information necessary to fulfill the reporting requirements of the Inspector General Act of 1978, as amended.

The new system of records will consolidate the separate and independent systems of records that the OIG currently uses to house all of its criminal and civil investigative files with PII data in the various OIG information systems in a single OIG investigative files system of records.

This notice meets the requirement documenting the change to the systems of records that the FCC maintains, and provides the public, OMB, and Congress with an opportunity to comment.

FCC/OIG–3

SYSTEM NAME:

Investigative Files.

SECURITY CLASSIFICATION:

Sensitive, but not Classified.

SYSTEM LOCATION:

Office of Inspector General (OIG), Federal Communications Commission (FCC), 445 12th Street, SW., Washington, DC 20554.

CATEGORIES OF INDIVIDUALS COVERED BY THIS SYSTEM:

Included in this system are records on:

1. Individuals who are or have been the subjects of investigations conducted by the OIG; and

2. Individuals who are: witnesses, complainants, informants, suspects, defendants, parties identified by the OIG or by other agencies, constituent units of the FCC and members of the general public in connection with the authorized functions of the OIG.

CATEGORIES OF RECORDS IN THE SYSTEM:

The categories of records in this system include:

1. Files developed during investigations of known or alleged fraud, waste, and abuse, or other irregularities or violations of laws and regulations;

2. Files related to programs and operations administered or financed by the FCC, including contractors and others doing business with the FCC;

3. Files relating to FCC employees' hotline complaints and other miscellaneous complaints; and

4. Investigative reports and related documents, such as correspondence, notes, attachments, and working papers.

AUTHORITY FOR MAINTENANCE OF THE SYSTEM:

Inspector General Act of 1978, as amended.

PURPOSE(S):

Pursuant to the Inspector General Act of 1978, as amended, the system is maintained for the purposes of:

1. Conducting and documenting investigations initiated and/or referred by or to the OIG or other investigative agencies regarding FCC programs and operations and reporting the results of investigations to other Federal agencies, other public authorities or professional organizations that have the authority to bring criminal prosecutions or civil or administrative actions, or to impose other disciplinary sanctions;

2. Documenting the outcome of OIG investigations;

3. Maintaining a record of the activities that were the subject of investigations;

4. Reporting investigative findings to the Commission management about problems and deficiencies in the FCC's programs and operations or to suggest corrective action in reference to identified irregularities, problems or deficiencies;

5. Maintaining a record of complaints and allegations received relative to FCC programs and operations and documenting the outcome of OIG reviews of those complaints and allegations;

6. Coordinating relationships with other Federal agencies, State and local governmental agencies, and nongovernmental entities in matters relating to the statutory responsibilities of the OIG; and

7. Acting as a repository and source for information necessary to fulfill the reporting requirements of the Inspector General Act of 1978, as amended.

ROUTINE USES OF RECORDS MAINTAINED IN THE SYSTEM, INCLUDING CATEGORIES OF USERS AND THE PURPOSES OF SUCH USES:

The OIG may disclose information contained in a record in this system of records under the routine uses listed in this system of records without the consent of the individual if the disclosure is compatible with the purposes for which the record was collected:

1. Law Enforcement and Investigation—The OIG may disclose information from this system of records to any Federal, State, local, Tribal, or foreign agency or other public authority or professional organization responsible for administering, enforcing, investigating, or prosecuting violations of administrative, civil, or criminal law or regulations if that information is relevant to any remedial, enforcement, regulatory, investigative, or prosecutorial responsibility of the receiving entity;

2. Disclosure to Public and Private Entities to Obtain Information Relevant to FCC Functions and Duties—The OIG may disclose information from this system to public or private sources to the extent necessary to obtain information from those sources relevant to an OIG investigation or inspection;

3. Adjudication and Litigation—The OIG may disclose a record from this system to the United States Department of Justice (DOJ), or other Federal, state, local or other authorities responsible for litigation or adjudication if relevant and necessary to litigation or adjudication and disclosure is compatible with the purpose for which the records were collected. The OIG may make such a disclosure in the event that the one of the following parties is involved in the litigation or adjudication or has an interest in the litigation:

(a) The FCC or any component or program of the FCC;

(b) Any employee or agent of the FCC in his or her official capacity;

(c) Any employee of the FCC in his or her individual capacity if the DOJ has agreed to represent the employee or in connection with a request for that representation; or

(d) The United States, if the OIG determines that the litigation or adjudication is likely to affect the FCC;

4. Disclosure to Contractors and Consultants—The OIG may disclose a record from this system to the employees of any entity or individual with whom or with which the FCC contracts for the purpose of performing any functions or analyses that facilitate or are relevant to an OIG investigation, audit, inspection, or other inquiry. Before entering into such a contract, the OIG shall require the contractor to maintain Privacy Act safeguards, as required under the Federal Acquisition Regulations (FAR) Privacy Act provisions (Subparts 24.1 and 24.2) and include the specified contract clauses (Parts 52.224–1 and 52.224–2), as appropriate, to ensure that personal information by contractors who work on FCC-owned systems of records and the system data are protected as mandated;

5. Debarment and Suspension Disclosure—The OIG may disclose information from this system to the FCC or another Federal agency considering suspension or debarment action if the information is relevant to the suspension or debarment action. The OIG also may disclose information to the FCC or another agency to gain information in support of the FCC's own debarment and suspension actions.

6. Government-Wide Program Management and Oversight—The OIG may disclose a record from this system to the National Archives and Records Administration (NARA) for the purpose of records management inspections conducted under authority of 44 U.S.C. 2904 and 2906; when the U.S. Department of Justice (DOJ) is contacted in order to obtain that department's advice regarding disclosure obligations under the Freedom of Information Act or any other matter relevant to the FCC's programs or operations; or when the Office of Management and Budget (OMB) is contacted in order to obtain that office's advice regarding obligations under the Privacy Act.

7. Benefit Program Disclosure—The OIG may disclose a record from this system to any Federal, State, local, or other public authority, if relevant to the prevention or detection of fraud and abuse in benefit programs administered by any agency or public authority.

8. Financial Obligations Under the Debt Collection Acts—The OIG may disclose a record from this system to: other Federal agencies for the purpose of collecting and reporting on delinquent debts as authorized by the Debt Collection Act of 1982 or the Debt Collection Improvement Act of 1996; any Federal, state, or local agency to

conduct an authorized computer matching program in compliance with the Privacy Act of 1974, as amended, to identify and locate individuals who are delinquent in their repayment of certain debts owed to the U.S. Government; prepare information on items considered income for taxation purposes to be disclosed to Federal, state, and local governments; or any Federal, State, local, or foreign agency, or other public authority, if relevant to the collection of other debts and overpayments owed to any agency or public authority.

9. Disclosure to the President's Council on Integrity and Efficiency (PCIE)—The OIG may disclose a record from this system to members and employees of the PCIE for the preparation of reports to the President and Congress on the activities of the Inspectors General;

10. Disclosure for Qualitative Assessment Reviews—The OIG may disclose a record from this system to members of the PCIE, the DOJ, the U.S. Marshals Service, or any Federal agency for the purpose of conducting qualitative assessment reviews of the investigative operations of the OIG to ensure that adequate internal safeguards and management procedures are maintained;

11. Breach of Federal Data—The OIG may disclose a record from this system to appropriate agencies, entities, and persons when (1) the OIG suspects or has confirmed that the security or confidentiality of information in the system of records has been compromised; (2) the OIG has determined that as a result of the suspected or confirmed compromise there is a risk of harm to economic or property interests, identity theft or fraud, or harm to the security or integrity of this system or other systems or programs (whether maintained by the FCC or another agency or entity) that rely upon the compromised information; and (3) the disclosure made to such agencies, entities, and persons is reasonably necessary to assist in connection with the OIG's efforts to respond to the suspected or confirmed compromise and prevent, minimize, or remedy such harm; and

In each of these cases, the OIG will determine whether disclosure of the records is compatible with the purpose(s) for which the records were collected, *i.e.,* the OIG may make these disclosures on a case-by-case basis or, if the OIG has met the requirements of the Computer Matching and Privacy Protection Act, under a computer matching agreement.

DISCLOSURE TO CONSUMER REPORTING AGENCIES:

None.

POLICIES AND PRACTICES FOR STORING, RETRIEVING, ACCESSING, RETAINING, AND DISPOSING OF RECORDS IN THE SYSTEM:

STORAGE:

Information in this information system consists of paper records, documents, and files in file folders and electronic records, files, and data that are stored in the OIG databases that are part of the FCC's computer network.

RETRIEVABILITY:

Records, including both paper documents and files and electronic files and data, are filed alphabetically by name of the subject of the investigation or by a unique file number assigned to each investigation.

SAFEGUARDS:

The paper, diskette, and records contained in other media are kept in locked storage that is further secured at the end of each business day. Limited access to these records is permitted by those persons whose official duties require such access; thus, unauthorized examination during business hours would be easily detected.

The electronic records, files, and data are maintained in the FCC computer network databases. Access to the electronic files is restricted to authorized OIG supervisors and staff. Authorized OIG staff and OIG contractors and authorized staff and contractors in the FCC's Information Technology Center (ITC) have access to the electronic files on an ''as needed'' basis. The FCC's computer network databases are protected by the FCC's security protocols, which include controlled access, passwords, and other security features to prevent unauthorized users from gaining access to the data and system resources. Backup tapes are stored on-site and at a secured, off-site location.

RETENTION AND DISPOSAL:

Investigative and other files are retained and disposed of in accordance with OIG's Records Retention Policy.

SYSTEM MANAGER(S) AND ADDRESS:

Office of Inspector General (OIG), Federal Communications Commission (FCC), 445 12th Street, SW., Washington, DC 20554.

NOTIFICATION PROCEDURE:

Under the authority granted to heads of agencies by 5 U.S.C. 552a(k), the FCC has determined (47 CFR 0.561) that this system of records is exempt from the notification procedure for this system of records.

RECORD ACCESS PROCEDURES:

Under the authority granted to heads of agencies by 5 U.S.C. 552a(k), the FCC has determined (47 CFR 0.561) that this system of records is exempt from disclosing its record access procedures for this system of records.

CONTESTING RECORD PROCEDURE:

Under the authority granted to heads of agencies by 5 U.S.C. 552a(k), the FCC has determined (47 CFR 0.561) that this system of records is exempt from disclosing its contesting record procedures for this system of records.

RECORD SOURCE CATEGORIES:

Under the authority granted to heads of agencies by 5 U.S.C. 552a(k), the FCC has determined (47 CFR 0.561) that this system of records is exempt from disclosing its record sources for this system of records.

EXEMPTION FROM CERTAIN PROVISIONS OF THE ACT:

This system of records is exempt from sections (c)(3), (d), (e)(4)(G), (e)(4)(H), and (e)(4)(I), and (f) of the *Privacy Act of 1974,* 5 U.S.C. 552a, and from 47 CFR 0.554–0.557 of the Commission's rules. These provisions concern the notification, record access, and contesting procedures described above, and also the publication of record sources. The system is exempt from these provisions because it contains the types of materials described in section (k) of the Privacy Act.

Federal Communications Commission.

Marlene H. Dortch,

Secretary, Office of the Secretary, Office of Managing Director.

[FR Doc. 2011–21861 Filed 8–25–11; 8:45 am]

BILLING CODE 6712–01–P

FEDERAL DEPOSIT INSURANCE CORPORATION

Notice to All Interested Parties of the Termination of the Receivership of City Savings FSB, Somerset, NJ

Notice is Hereby Given that the Federal Deposit Insurance Corporation (''FDIC'') as Receiver for City Savings FSB, Somerset, New Jersey (''Receiver'') intends to terminate the Receivership for said institution. The Resolution Trust Corporation (''RTC'') was appointed Receiver for City Savings FSB and City Savings Bank FSB and pursuant to 12 U.S.C. 1441a(m)(1) FDIC succeeded RTC as Receiver. Receivership activities for City Savings

Bank FSB were previously terminated on January 1, 2004. The liquidation of receivership assets has been completed. To the extent permitted by available funds, and in accordance with law, the Receiver will be making a final dividend payment to proven creditors.

Based on the foregoing, the Receiver has determined that the continued existence of the receiverships will serve no useful purpose. Consequently, notice is given that the Receivership shall be terminated, to be effective no sooner than thirty days after the date of this Notice. If any person wishes to comment concerning the termination of the Receivership, such comment must be made in writing and sent within thirty days of the date of this Notice to: Federal Deposit Insurance Corporation, Attention: Receivership Oversight Department 34.3, 1601 Bryan Street, Dallas, Texas 75201.

No comments concerning the termination of these receiverships will be considered which are not sent within this time frame.

Federal Deposit Insurance Corporation.

Dated August 22, 2011.

Valerie J. Best,

Assistant Executive Secretary.

[FR Doc. 2011–21904 Filed 8–25–11; 8:45 am]

BILLING CODE 6714–01–P

FEDERAL DEPOSIT INSURANCE CORPORATION

Update to Notice of Financial Institutions for Which the Federal Deposit Insurance Corporation Has Been Appointed Either Receiver, Liquidator, or Manager

AGENCY: Federal Deposit Insurance Corporation.

ACTION: Update Listing of Financial Institutions in Liquidation.

SUMMARY: Notice is hereby given that the Federal Deposit Insurance Corporation (Corporation) has been appointed the sole receiver for the following financial institutions effective as of the Date Closed as indicated in the listing. This list (as updated from time to time in the **Federal Register**) may be relied upon as ''of record'' notice that the Corporation has been appointed receiver for purposes of the statement of policy published in the July 2, 1992 issue of the **Federal Register** (57 FR 29491). For further information concerning the identification of any institutions which have been placed in liquidation, please visit the Corporation Web site at *http://www.fdic.gov/bank/individual/failed/banklist.html* or contact the Manager of Receivership Oversight in the appropriate service center.

Dated: August 22, 2011.

Federal Deposit Insurance Corporation.

Pamela Johnson,

Regulatory Editing Specialist.

INSTITUTIONS IN LIQUIDATION

[In alphabetical order]

FDIC Ref. No.	Bank name	City	State	Date closed
10390	First Choice Bank	Geneva	IL	8/19/2011
10391	First Southern National Bank	Statesboro	GA	8/19/2011
10392	Lydian Private Bank	Palm Beach	FL	8/19/2011
10389	Public Savings Bank	Huntingdon Valley	PA	8/18/2011

[FR Doc. 2011–21862 Filed 8–25–11; 8:45 am]

BILLING CODE 6714–01–P

FEDERAL ELECTION COMMISSION

Sunshine Act Meeting

AGENCY: Federal Election Commission.

DATE AND TIME: Tuesday, August 30, 2011, at 10 a.m.

PLACE: 999 E Street, NW., Washington, DC.

STATUS: This meeting will be closed to the public.

Items To Be Discussed

Compliance matters pursuant to 2 U.S.C. 437g.

Audits conducted pursuant to 2 U.S.C. 437g, 438(b), and Title 26, U.S.C.

Matters concerning participation in civil actions or proceedings or arbitration.

Internal personnel rules and procedures or matters affecting a particular employee.

* * * * *

PERSON TO CONTACT FOR INFORMATION: Judith Ingram, Press Officer, Telephone: (202) 694–1220.

Shelley E. Garr,

Deputy Secretary of the Commission.

[FR Doc. 2011–21957 Filed 8–24–11; 11:15 am]

BILLING CODE 6715–01–P

FEDERAL HOUSING FINANCE AGENCY

[No. 2011–N–09]

Proposed Collection; Comment Request

AGENCY: Federal Housing Finance Agency.

ACTION: 30-day notice of submission of information collection for approval from the Office of Management and Budget.

SUMMARY: In accordance with the Paperwork Reduction Act of 1995, Public Law 104–13, the Federal Housing Finance Agency (FHFA) is submitting the information collection titled ''Federal Home Loan Bank Directors,'' to the Office of Management and Budget (OMB) for review and approval of a three-year extension of the OMB Control number, 2590–0006, which is due to expire on August 31, 2011.

DATES: Interested persons may submit comments on or before September 26, 2011.

COMMENTS: Submit comments to the Office of Information and Regulatory Affairs of the Office of Management and Budget, Attention: Desk Officer for the Federal Housing Finance Agency, Washington, DC 20503, *Fax:* 202–395–6974, *E-mail: OIRA_Submission@omb.eop.gov.* Please also submit the comments to FHFA using any one of the following methods:

- *E-mail: RegComments@fhfa.gov.* Please include Proposed Collection; Comment Request: ''Federal Home Loan Bank Directors,'' (No. 2011–N–09) in the subject line of the message.
- *Federal eRulemaking Portal: http://www.regulations.gov.* Follow the instructions for submitting comments. If you submit your comment to the *Federal eRulemaking Portal,* please also send it by *e-mail* to FHFA at *RegComments@fhfa.gov* to ensure timely receipt by the agency.
- *Mail/Hand Delivery:* Federal Housing Finance Agency, Fourth Floor,

1700 G Street NW., Washington, DC 20552, ATTENTION: Public Comments/ Proposed Collection; Comment Request: ''Federal Home Loan Bank Directors,'' (No. 2011–N–09).

FHFA will post all public comments we receive without change, including any personal information you provide, such as your name and address, on the FHFA Web site at *http://www.fhfa.gov.* In addition, copies of all comments received will be available for examination by the public on business days between the hours of 10 a.m. and 3 p.m., at the Federal Housing Finance Agency, Fourth Floor, 1700 G Street, NW., Washington, DC 20552. To make an appointment to inspect comments, please call the Office of General Counsel at (202) 414–6924.

FOR FURTHER INFORMATION CONTACT: Patricia L. Sweeney, Management Analyst, Division of Bank Regulation, *patricia.sweeney@fhfa.gov,* (202) 408–2872, Federal Housing Finance Agency, 1625 Eye Street, NW., Washington, DC 20006, or Eric M. Raudenbush, Assistant General Counsel, *eric.raudenbush@fhfa.gov,* (202) 414–6421, Federal Housing Finance Agency, Fourth Floor, 1700 G Street, NW., Washington, DC 20552 (these are not toll-free numbers). The telephone number for the Telecommunications Device for the Hearing Impaired is (800) 877–8339.

SUPPLEMENTARY INFORMATION:

A. Need for and Use of the Information Collection

Section 7 of the Federal Home Loan Bank Act (Bank Act) vests the management of each Federal Home Loan Bank (Bank) in its board of directors. *See* 12 U.S.C. 1427(a)(1). As required by section 7, each Bank's board comprises two types of directors: (1) Member directors, who are drawn from the officers and directors of member institutions located in the Bank's district and who are elected every four years to represent members in a particular state; and (2) independent directors, who are unaffiliated with any Bank member and who are elected every four years on an at-large basis in each Bank district. *See* 12 U.S.C. 1427(b) and (d). Section 7 and FHFA's implementing regulation, codified at 12 CFR part 1261, establish the eligibility requirements for both types of Bank directors and the qualifications for independent directors, and set forth the procedures for their election.

Under part 1261, the Banks determine the eligibility of nominees for member and independent directorships and administer the annual director election process. As part of this process, candidates for both types of directorship, including incumbents, are required to complete and return to the Bank a form that solicits information about the candidate's statutory eligibility to serve and, in the case of independent director candidates, about his or her qualifications for the directorship being sought. *See* 12 CFR 1261.7(c) and (f); 12 CFR 1261.14(b). Specifically, member director candidates are required to complete the *Federal Home Loan Bank Member Director Eligibility Certification Form (Member Director Eligibility Certification Form),* while independent director candidates must complete the *Federal Home Loan Bank Independent Director Application Form.* Part 1261 also requires that all directors certify annually that they continue to meet all eligibility requirements. *See* 12 CFR 1261.12. Member Directors do this by completing the *Member Director Eligibility Certification Form* again every year, while Independent Directors complete the abbreviated *Federal Home Loan Bank Independent Director Annual Certification Form* to certify their ongoing eligibility.

Affected Public: Private Sector.

Costs: FHFA estimates that there will be no annualized capital/start-up costs for the respondents to collect and submit the information.

Type of Respondents: Individuals who are prospective and incumbent Bank Directors.

B. Burden Estimate

FHFA estimates the total number of respondents is 295, which includes 160 prospective directors (100 member and 60 independent) and 135 incumbent directors (80 member and 55 independent). As explained below, FHFA estimates that the total annual hour burden for all respondents is 278 hours.

1. Prospective and Incumbent Member Directors

FHFA estimates the total annual average hour burden for all the prospective and incumbent member directors is 70 hours. This includes a total annual average of 100 prospective member directors, with 1 response per individual taking an average of 30 minutes (.5 hours) (100 individuals × .5 hours = 50 hours). It also includes a total annual average of 80 incumbent member directors, with 1 response per individual taking an average of 15 minutes (.25 hours) (80 individuals × .25 hours = 20 hours).

2. Prospective and Incumbent and Independent Directors

FHFA estimates the total annual average hour burden for all the prospective and incumbent independent directors is 208. This includes a total annual average of 60 prospective independent directors, with 1 response per individual taking an average of 3 hours (60 individuals × 3 hours = 180 hours). It also includes a total annual average of 55 incumbent independent directors, with 1 response per individual taking an average of 30 minutes (.5 hours) (55 individuals × .5 hours = 28 hours).

C. Comment Request

In accordance with the requirements of 5 CFR 1320.8(d), FHFA published a request for public comments regarding this information collection in the **Federal Register** on May 25, 2011. *See* 76 FR 30344 (May 25, 2011). The 60-day comment period closed on July 25, 2011. FHFA received one comment which questioned whether the instructions to questions 4–6 on the *Member Director Eligibility Certification Form* were phrased so as to accurately reflect one of the statutory requirements pertaining to the eligibility of an individual to serve as a member director of a Bank. In response to this comment, FHFA has revised question 6 of that form and its related instruction so that they more accurately state the statutory standard. These revisions have not resulted in any changes to the cost and burden estimates. The agency determined that the instructions to questions 4–5 of the form do not need to be revised. FHFA received no comments addressing the cost and hour burden estimates.

FHFA requests written comments on the following: (1) Whether the collection of information is necessary for the proper performance of FHFA functions, including whether the information has practical utility; (2) the accuracy of FHFA's estimates of the burdens of the collection of information; (3) ways to enhance the quality, utility, and clarity of the information collected; and (4) ways to minimize the burden of the collection of information on respondents, including through the use of automated collection techniques or other forms of information technology.

Dated: August 22, 2011.

Edward J. DeMarco,

Acting Director, Federal Housing Finance Agency.

BILLING CODE 8070–01–P

FEDERAL HOME LOAN BANK MEMBER DIRECTOR ELIGIBILITY CERTIFICATION FORM

1. Print or type your full name:

_____

2. Are you a citizen of the United States? **Yes** ☐ **No** ☐

3. Provide the address of your principal residence:

Street	City	State	Zip code

4. Provide the following information about the institution you serve as an officer or director that is a member of your Federal Home Loan Bank:

Name of member	**Your title or position**

Telephone number	**Fax number**	**E-mail address**

Street	**City**	**State**	**Zip code**

Mailing address (if different)	**City**	**State**	**Zip code**

5. Provide the name and location of any other institution you serve as an officer or a director that is a member of any Federal Home Loan Bank:

Name of member	**City**	**State**	**Your title or position**
Name of member	**City**	**State**	**Your title or position**

Expires 8/31/2011
OMB No. 2590-0006

FEDERAL HOME LOAN BANK MEMBER DIRECTOR ELIGIBILITY CERTIFICATION FORM

6. Does each member listed in LINE 4 and LINE 5 comply with all of its applicable minimum capital requirements established by its appropriate federal or state regulator?

Yes ☐ **No** ☐

If you answered **No**, identify the non-compliant institution and note the Bank of which it is a member.

_____	_____
Name of member	**Bank District**
_____	_____
Name of member	**Bank District**

I HEREBY CERTIFY that the information provided on this Federal Home Loan Bank Member Director Eligibility Certification Form is true, correct, and complete to the best of my knowledge.

_____	_____
Signature	Date

State of _____)
County of _____)

Signed and sworn to before me this ____ day of _____ of 20___.

_____
Signature of Notary Public

(Notarial Seal)

My commission expires: _____

DIRECTIONS

If you need assistance in completing this Form or have any questions, please contact:

Name:
Federal Home Loan Bank of
Address:
Telephone:
Fax:
E-Mail:

Who Must File and When

The Federal Home Loan Bank (Bank) uses the information you provide on this Form to determine whether you meet the statutory and regulatory eligibility requirements to serve as a member director. You can find these requirements in section 1427 of Title 12 of the United States Code (12 U.S.C. § 1427) and in part 1261 of Title 12 of the Code of Federal Regulations (12 C.F.R. part 1261). A copy of the statutory and regulatory eligibility requirements is enclosed for your reference. Only individuals who satisfy these requirements may run for a member directorship or serve as a member director.

Nominees for a Member Bank Directorship

If you wish to accept a nomination to serve as a member director, you must complete this Form and return it to the Bank on or before _____. If you do not submit this Form to the Bank by the deadline, you will be deemed to have declined the nomination.

Incumbent Member Bank Directors

Every year, each incumbent member director must complete this Form and return it to the Bank on or before March 1st. The Bank will use the information to confirm your continued eligibility to serve as a member director. If you do not submit this form by the March 1st deadline, the Bank may declare that you are no longer eligible to serve as a member director, and may declare vacant the member directorship that you hold. If March 1st falls on a Saturday, Sunday, or federal holiday, you have until the next business day to submit the completed Form.

Individuals Selected to Fill a Vacancy

If the Bank selected you to fill a vacancy on the board of directors, you must complete this Form and return it to the Bank on or before _____. You cannot become a member director unless you complete and return the Form to the Bank.

FEDERAL HOME LOAN BANK MEMBER DIRECTOR ELIGIBILITY CERTIFICATION FORM: DIRECTIONS

Line-by-Line Instructions

LINE 1. Print or type your full name.

LINE 2. You must be a United States citizen in order to serve as a member director. Check the appropriate answer.

LINE 3. Provide the address of your principal residence.

LINE 4. You must be an officer or a director of an institution that is a member of the Bank in order to be a member director of that Bank. In addition, the member must be located in the state within the Bank district that is to be represented by the directorship you wish to hold. In most cases, a member will be deemed to be located where it maintains its home office or its principal place of business. Provide the requested information for the member you serve as an officer or director, as well as your title or position at that institution.

LINE 5. If you are an officer or director of any other institution that is a member of this or any other Bank, provide the name and location of the institution(s), as well as the position that you hold at the institution(s).

LINE 6. In order for you to be eligible to serve as a member director, every institution that you serve as an officer or director that is a member of the Bank in which you wish to hold a directorship must be in compliance with all of its applicable minimum capital requirements established by its appropriate federal or state regulator. The term "appropriate federal regulator" has the same meaning as the term "appropriate Federal banking agency" in section 3(q) of the Federal Deposit Insurance Act (12 U.S.C. § 1813(q)) and, for federally insured credit unions, means the National Credit Union Administration. The term "appropriate state regulator" means any state officer, agency, supervisor, or other entity that has regulatory authority over, or is empowered to institute enforcement action against, a member.

Check the appropriate answer as to whether each institution you listed in LINE 4 and LINE 5 is in compliance with all of the applicable minimum capital requirements established by its appropriate federal or state regulator. If the answer is **No**, you must list each non-compliant institution regardless of the Bank of which it is a member. However, your status as an officer or director of a non-compliant institution will render you ineligible to serve as a Bank director only if that institution is a member of the Bank in which you wish to hold a directorship.

Privacy Act Statement: In accordance with the Privacy Act (5 U.S.C. 552a), the following notice is provided. This information is solicited under authority of 12 U.S.C. 1427(a) and (b); and 12 CFR 1261.5, 1261.7, and 1261.10 to 1261.13. Furnishing the information on this form is voluntary, but failure to do so may result in you not meeting the statutory and regulatory eligibility requirements to serve as a member director. The purpose of this information is to facilitate the timely determination of your eligibility to serve as a member director. Information may be disclosed in accordance with the routine uses identified in FHFA-System of Records Notice FHFA-8 Federal Home Loan Bank Directors, which may be found at http://www.fhfa.gov/webfiles/21534/Notice%20FHFA%20SORs%20(FHFA-7%20to%20FHFA-13)_published%2076%20FR%2033286%20(6-8-11)%20(2).pdf).

Paperwork Reduction Act Statement: Notwithstanding any other provision of the law, no person is required to respond to, nor shall any person be subject to a penalty for failure to comply with, a collection of information subject to the requirements of the Paperwork Reduction Act, unless that collection of information displays a currently valid OMB Control Number.

FEDERAL HOME LOAN BANK INDEPENDENT DIRECTOR APPLICATION FORM

PERSONAL INFORMATION

Full name: _____

Address:

Current employment:

Name of organization	Your title or position

Telephone number	Fax number	E-mail address

Street	City	State	Zip code
Mailing address (if different)	City	State	Zip code

STATUTORY ELIGIBLITY REQUIREMENTS

An individual must satisfy certain statutory requirements in order to be eligible for election as an independent director of a Federal Home Loan Bank (Bank). The requirements relate to citizenship, residency, and, for prospective public interest directors, experience in that field. The statute also prohibits an independent director from serving as an officer, employee, or director of an institution that is a member of, or that receives advances from, the Bank on whose board the director serves. The questions below address these statutory requirements.

1. ***Citizenship.*** Are you a citizen of the United States? **Yes** ☐ **No** ☐

2. ***Residency.*** In order to be an independent director you must be a bona fide resident of a state that is in the geographic district of the Bank on whose board you wish to serve. You will satisfy this requirement if your principal residence is located in that geographic district (A), or if you own or lease a second residence in the district *and* are employed in the district (B). Please indicate the basis you are using to demonstrate bona fide residence.

A. Is your principal residence located in the Bank's geographic district? **Yes** ☐ **No** ☐

B. If you answered No, do you own or lease a second residence in the Bank's district *and* are you employed in the district? **Yes** ☐ **No** ☐

If so, provide the address of your second home, the name of, and identifying information on, your employer, and your title or position, if different from that on page 1 of this Form.

Second home address:

Employer information:

Name of organization	**Your title or position**

Telephone number	**Fax number**	**E-mail address**

Street	**City**	**State**	**Zip code**
Mailing address (if different)	**City**	**State**	**Zip code**

3. ***Public Interest Directors.*** If you are seeking election as a public interest director, you must be able to demonstrate that you have more than four years experience representing consumer or community interests on banking services, credit needs, housing, or consumer financial protections.

If you meet this requirement, provide information on how you have represented such consumer or community interests for more than four years.

4. ***Conflicts of interest.*** Independent directors and their spouses may not serve as an officer of any Bank or as an officer, employee, or director of any member of, or any recipient of advances from, the Bank on whose board the independent director serves. You and your spouse will have to give up any conflicting position before you can become a Bank director.

For purposes of this conflict of interest provision, the terms:

"Member" and "Recipient of advances" include the institution itself and any subsidiary of the institution. If the institution is owned by a holding company, the terms include the holding company if 35 percent or more of the holding company's assets, on a consolidated basis, are attributable to institutions that are members of, or recipients of advances from, the Bank on whose board the independent director serves. Thus, you may not serve as a director, employee, or officer of a holding company if one or more members of, or one or more recipients of advances from, your Bank constitute 35 percent or more of the holding company's assets.

A. Please specify each position you and your spouse have in any member of, or recipient of advances from, the Bank on whose board you would serve.

B. Do you agree to give up positions that are deemed to be conflicting interests before becoming an independent director of that Bank? **Yes** ☐ **No** ☐

SELECTION CRITERIA

The Banks are multi-billion dollar financial institutions, the principal business of which is to borrow funds in the capital markets and then provide secured loans to their members. Each Bank is required to have independent directors who possess knowledge or expertise in financial management, derivatives, auditing and accounting, risk management practices, project development, organizational management, or the law.

1. ***Leadership Experience.*** Bank directors should have experience in senior management or policy-making in one or more fields of business, government, education, or community/civic affairs, and should have a record of achievement in their chosen profession or field of business. This experience should provide directors with the ability to understand the business of the Bank, to act independently, and to ask Bank management appropriate questions about how they are conducting Bank business.

A. If you have ever served as the CEO, CFO, COO, or in a similar capacity for a business enterprise, or as a dean or senior faculty member at a prominent college or university, or as a senior official for a federal or state government or prominent nonprofit organization, please provide the details for those positions, including the dates of service and the positions held.

B. If you have other experience dealing with issues such as developing or implementing business strategies, overseeing regulatory compliance, corporate governance, or board operations, or have previously served on the board of a large business enterprise, please describe those experiences.

C. If you have other significant business or professional achievements that demonstrate your ability to lead an organization please describe them.

2. ***Business Knowledge.*** Bank directors must be financially literate, meaning they must be familiar with how financial statements and various financial ratios are used in managing a business enterprise, how basic accounting conventions apply to the Bank, and how internal controls are used to manage risk. They also must have some knowledge about one or more of the areas of the Bank's business, such as mortgage finance, capital markets transactions, accounting/modeling practices, affordable housing, community and economic development, and legal and regulatory compliance.

A. Do you know how to read and understand a financial statement, and do you understand how financial ratios and other indices are used for evaluating the performance of a business enterprise? **Yes** ☐ **No** ☐

If you answered **Yes**, please describe the setting in which you gained that knowledge.

B. Do you have a working familiarity with basic finance and accounting practices, including internal controls and risk management? **Yes** ☐ **No** ☐

If you answered **Yes**, please describe the setting in which you acquired that knowledge.

C. Do you have experience with financial accounting and auditing, particularly with a publicly traded company? **Yes** ☐ **No** ☐

If you answered **Yes**, please describe that experience.

D. Do you have experience in project development or organizational management?
Yes ☐ **No** ☐

If you answered **Yes**, please describe that experience.

E. Do you have experience in an organization providing financing for residential mortgages, housing for low or moderate income individuals and families, or real estate development?
Yes ☐ **No** ☐

If you answered **Yes**, please describe that experience.

F. Have you served in any position that required an understanding of the legal and other fiduciary obligations associated with being an independent director? **Yes** ☐ **No** ☐

If you answered **Yes**, please describe that experience.

G. The mission of the Banks is to support the housing finance activities of their members, which includes residential mortgage finance and community and economic development lending activities. Please describe any prior experience that is related to the mission of the Banks.

3. ***Commitment to Service.*** In order to serve effectively on the board of a Bank, a director must be able to attend the meetings of the board of directors and subcommittees on which the director serves, and to devote the time necessary to prepare for those meetings.

A. Do you have any other business or professional commitments that would hinder your ability to prepare for and attend board of director and committee meetings? **Yes** ☐ **No** ☐

If so, please describe the constraints on your ability to serve.

B. If you serve on any other corporate boards, please provide the name and location of the organization, your role (*e.g.*, chair and committee assignments), and the term of service.

Name of organization	**Your role**	**Term**
Name of organization	**Your role**	**Term**
Name of organization	**Your role**	**Term**

4. ***Personal Integrity.*** Character is an important consideration in evaluating any prospective Bank director. All directors must have high ethical standards and integrity in both their personal and professional dealings. Please indicate whether you ever have been convicted of a felony, been found to have violated any federal or state civil laws relating to the securities, banking, housing or real estate industries, or have had a professional license suspended or revoked.
Yes ☐ **No** ☐

If you answered **Yes**, please explain.

5. ***Independence.*** It is essential that an independent director be able to act independently of management in overseeing the policy and operations of a Bank, and not have any relationships that may create actual or apparent conflicts of interest. Please disclose whether you have any familial or business relationships with any members of Bank management or the board of directors of the Bank, and any other relationship(s) that might lead a reasonable person to question your independence. **Yes** ☐ **No** ☐

If you answered **Yes**, please explain.

6. ***Other Experience and Education.*** Please provide a copy of your resume if it describes other business, professional, or educational achievements that are not described in the responses to the questions above. Resume attached. **Yes** ☐ **No** ☐

BY EXECUTING AND SUBMITTING THIS APPLICATION FORM, YOU ARE CERTIFYING THAT THE INFORMATION YOU PROVIDED IS TRUE, CORRECT, AND COMPLETE TO THE BEST OF YOUR KNOWLEDGE AND THAT YOU AGREE TO SERVE AS A DIRECTOR IF ELECTED.

_____ _____

Signature Date

Privacy Act Statement: In accordance with the Privacy Act (5 U.S.C. 552a), the following notice is provided. This information is solicited under authority of 12 U.S.C. 1427(a) and (b); and 12 CFR 1261.5, 1261.7, and 1261.10 to 1261.13. Furnishing the information on this form is voluntary, but failure to do so may result in you not meeting the statutory and regulatory eligibility requirements to serve as an independent director. The purpose of this information is to facilitate the timely determination of your eligibility to serve as an independent director. Information may be disclosed in accordance with the routine uses identified in FHFA-System of Records Notice FHFA-8 Federal Home Loan Bank Directors, which may be found at http://www.fhfa.gov/webfiles/21534/Notice%20FHFA%20SORs%20(FHFA-7%20to%20FHFA-13)_published%2076%20FR%2033286%20(6-8-11)%20(2).pdf).

Paperwork Reduction Act Statement: Notwithstanding any other provision of the law, no person is required to respond to, nor shall any person be subject to a penalty for failure to comply with, a collection of information subject to the requirements of the Paperwork Reduction Act, unless that collection of information displays a currently valid OMB Control Number.

FEDERAL HOME LOAN BANK INDEPENDENT DIRECTOR ANNUAL CERTIFICATION FORM

Full name: _____

Federal Home Loan Bank of: _____

Every year, each incumbent independent Federal Home Loan Bank (Bank) director must certify that he or she continues to meet all of the following requirements:

- United States citizen
- Bona fide resident of a state in the geographic district of the Bank on whose board you serve
  - your principal residence is located in that geographic district OR
  - you own or lease a second residence in the district *and* are employed in the district
- During your term of office, you and your spouse may not:
  - serve as an officer of any Federal Home Loan Bank
  - serve as an officer, employee, or director of any member or subsidiary of a member of the Bank you serve, or any holding company that controls one or more members of the Bank you serve if the assets of all such members constitute 35 percent or more of the assets of the holding company, on a consolidated basis
  - serve as an officer, employee, or director of any recipient of advances from the Bank you serve, or any holding company that controls one or more recipients of advances from the Bank you serve if the assets of all such recipients constitute 35 percent or more of the assets of the holding company, on a consolidated basis
- To be designated a public interest director, you must have more than four years experience representing consumer or community interests on banking services, credit needs, housing, or consumer financial protections
- If you are not designated as a public interest director, you must have knowledge or experience in one of the following: auditing and accounting, derivatives, financial management, organizational management, project development, risk management practices, or the law.

By executing this form, you are certifying that you continue to meet these requirements and that the director application form you submitted previously, or any amended certification form you submitted previously, is true, correct, and complete to the best of your knowledge.

Please check one box:

☐ **No changes have occurred.**

☐ **Changes have occurred to my responses in these sections of my Form:**

Personal information:

Eligibility information, including conflicts of interest:

Commitment to serve:

Personal integrity:

Independence:

Other changes:

Dated: _____

Signature: _____

Privacy Act Statement: In accordance with the Privacy Act (5 U.S.C. 552a), the following notice is provided. This information is solicited under authority of 12 U.S.C. 1427(a) and (b); and 12 CFR 1261.5, 1261.7, and 1261.10 to 1261.13. Furnishing the information on this form is voluntary, but failure to do so may result in you not meeting the statutory and regulatory eligibility requirements to serve as an independent director. The purpose of this information is to facilitate the timely determination of your eligibility to serve as an independent director. Information may be disclosed in accordance with the routine uses identified in FHFA-System of Records Notice FHFA-8 Federal Home Loan Bank Directors, which may be found at http://www.fhfa.gov/webfiles/21534/Notice%20FHFA%20SORs%20(FHFA-7%20to%20FHFA-13)_published%2076%20FR%2033286%20(6-8-11)%20(2).pdf).

Paperwork Reduction Act Statement: Notwithstanding any other provision of the law, no person is required to respond to, nor shall any person be subject to a penalty for failure to comply with, a collection of information subject to the requirements of the Paperwork Reduction Act, unless that collection of information displays a currently valid OMB Control Number.

Expires 8/31/2011
OMB No. 2590-0006

[FR Doc. 2011–21834 Filed 8–25–11; 8:45 am]

BILLING CODE 8070–01–C

FEDERAL RESERVE SYSTEM

Change in Bank Control Notices; Acquisitions of Shares of a Bank or Bank Holding Company

The notificants listed below have applied under the Change in Bank Control Act (12 U.S.C. 1817(j)) and § 225.41 of the Board's Regulation Y (12 CFR 225.41) to acquire shares of a bank or bank holding company. The factors that are considered in acting on the notices are set forth in paragraph 7 of the Act (12 U.S.C. 1817(j)(7)).

The notices are available for immediate inspection at the Federal Reserve Bank indicated. The notices also will be available for inspection at the offices of the Board of Governors. Interested persons may express their views in writing to the Reserve Bank indicated for that notice or to the offices of the Board of Governors. Comments must be received not later than September 12, 2011.

A. Federal Reserve Bank of Dallas (E. Ann Worthy, Vice President) 2200 North Pearl Street, Dallas, Texas 75201–2272:

1. *Brian A. Collins and Gina L. Collins,* both of Fort Worth, Texas; to acquire voting shares of First Bells Bankshares, Inc., and indirectly acquire voting shares of The First National Bank of Bells/Savoy, both in Bells, Texas.

Board of Governors of the Federal Reserve System, August 23, 2011.

Robert deV. Frierson,

Deputy Secretary of the Board.

[FR Doc. 2011–21892 Filed 8–25–11; 8:45 am]

BILLING CODE 6210–01–P

DEPARTMENT OF HEALTH AND HUMAN SERVICES

Centers for Disease Control and Prevention

Board of Scientific Counselors, Office of Public Health Preparedness and Response (BSC, OPHPR)

In accordance with section 10 (a)(2) of the Federal Advisory Committee Act (Pub. L. 92–463), the Centers for Disease Control and Prevention (CDC), announces the following meeting of the aforementioned committee:

Times and Dates: 9 a.m.–5 p.m., September 14, 2011; 8 a.m.–3:15 p.m., September 15, 2011.

Place: Emory Conference Center Hotel, Salon 1–3, 1615 Clifton Road, Atlanta, Georgia 30329.

Status: Open to the public limited only by the space available. The meeting room will accommodate up to 75 people. Public participants should pre-register for the meeting as described in Additional Information for Public Participants.

Purpose: This Board is charged with providing advice and guidance to the Secretary, Department of Health and Human Services (HHS), the Assistant Secretary for Health (ASH), the Director, Centers for Disease Control and Prevention (CDC), and the Director, Office of Public Health Preparedness and Response (OPHPR), concerning strategies and goals for the programs and research within OPHPR, monitoring the overall strategic direction and focus of the OPHPR Divisions and Offices, and administration and oversight of peer review of OPHPR scientific programs. For additional information about the Board, please visit: *http://www.cdc.gov/phpr/science/counselors.htm.*

Matters To Be Discussed: The agenda items for this meeting include: An update to the Board on OPHPR's strategic planning activities; an annual update on the implementation of recommendations from the external review of OPHPR's fiscal allocation process; program responses to the Board's recommendations for the external peer reviews of the Division of Select Agents and Toxins, the Division of State and Local Readiness, and the Division of Emergency Operations; reports to the Board on the external peer reviews of the Division of Strategic National Stockpile and the Career Epidemiology Field Officer Program; and updates from liaison representatives to the Board to share any key highlights of their organization's activities that are relevant to the OPHPR mission. Agenda items are subject to change as priorities dictate.

Additional Information for Public Participants: Members of the public that wish to attend this meeting should pre-register by submitting the following information by e-mail, facsimile, or phone (see Contact Person for More Information) no later than 12 noon (EDT) on Friday, September 2, 2011:

- Full Name,
- Organizational Affiliation,
- Complete Mailing Address,
- Citizenship, and
- Phone Number or E-mail Address.

Contact Person for More Information: Matthew Jennings, OPHPR BSC Coordinator, CDC, 1600 Clifton Rd NE., Mailstop D–44, Atlanta, Georgia 30333, Telephone: (404) 639–7357; Facsimile: (404) 639–7977; E-mail: *OPHPR.BSC.Questions@cdc.gov.*

The Director, Management Analysis and Services Office, has been delegated the authority to sign **Federal Register** notices pertaining to announcements of meetings and other committee management activities for both the Centers for Disease Control and Prevention, and Agency for Toxic Substances and Disease Registry.

Dated: August 19, 2011.

Elaine L. Baker,

Director, Management Analysis and Services Office, Centers for Disease Control and Prevention.

[FR Doc. 2011–21887 Filed 8–25–11; 8:45 am]

BILLING CODE 4163–18–P

DEPARTMENT OF HEALTH AND HUMAN SERVICES

Centers for Medicare & Medicaid Services

[Document Identifier: CMS–10320]

Agency Information Collection Activities: Submission for OMB Review; Comment Request

AGENCY: Centers for Medicare & Medicaid Services, HHS.

In compliance with the requirement of section 3506(c)(2)(A) of the Paperwork Reduction Act of 1995, the Centers for Medicare & Medicaid Services (CMS), Department of Health and Human Services, is publishing the following summary of proposed collections for public comment. Interested persons are invited to send comments regarding this burden estimate or any other aspect of this collection of information, including any of the following subjects: (1) The necessity and utility of the proposed information collection for the proper performance of the Agency's function; (2) the accuracy of the estimated burden; (3) ways to enhance the quality, utility, and clarity of the information to be collected; and (4) the use of automated collection techniques or other forms of information technology to minimize the information collection burden.

1. *Type of Information Collection Request:* Revision of a previously approved collection; *Title of Information Collection:* Health Care Reform Insurance Web Portal Requirements 45 CFR part 159; *Use:* In accordance with sections 1103 and 10102 of the Affordable Care Act, the U.S. Department of Health and Human Services created a Web site called healthcare.gov to meet these and other provisions of the law, and data collection was conducted for six months based upon an emergency information collection request. The interim final rule published on May 5, 2010 served as the emergency **Federal Register** Notice for the prior Information Collection Request (ICR). The Office of Management and Budget (OMB) reviewed this ICR under emergency processing and approved the ICR on April 30, 2010. CMS will be submitting a revised ICR to OMB for review and approval in accordance with the Paperwork Reduction Act of 1995. The proposed information collection is published to obtain comments from the public and affected agencies.

This information collection is mandated by sections 1103 and 10102 of the Affordable Care Act. Once all of the information is collected from insurance

issuers of major medical health insurance hereon referred to as issuers, it will be processed for display at *http://www.healthcare.gov.* The information that is provided will help the general public make educated decisions about private health care insurance options. In the event that an issuer has enhanced or modified its existing plans, created new plans, or deactivated plans, the organization would be required to update the information in the Web portal. States are high risk pool administrators are asked to update information annually. *Form Number:* CMS–10320 (OMB#: 0938–1086); *Frequency:* Reporting—Annually/Quarterly; *Affected Public:* Business or other for-profits and States; *Number of Respondents:* 700; *Total Annual Responses:* 13,050; *Total Annual Hours:* 86,100. (For policy questions regarding this collection contact Beth Liu at 301–492–4268. For all other issues call 410–786–1326.)

To obtain copies of the supporting statement and any related forms for the proposed paperwork collections referenced above, access CMS Web Site address at *http://www.cms.hhs.gov/PaperworkReductionActof1995,* or E-mail your request, including your address, phone number, OMB number, and CMS document identifier, to *Paperwork@cms.hhs.gov,* or call the Reports Clearance Office on (410) 786–1326.

To be assured consideration, comments and recommendations for the proposed information collections must be received by the OMB desk officer at the address below, no later than 5 p.m. on *September 26, 2011.*

OMB, Office of Information and Regulatory Affairs, Attention: CMS Desk Officer, Fax Number: (202) 395–6974, E-mail: *OIRA_submission@omb.eop.gov.*

Dated: *August 23, 2011.*

Martique Jones,

Director, Regulations Development Group, Division B, Office of Strategic Operations and Regulatory Affairs.

[FR Doc. 2011–21932 Filed 8–25–11; 8:45 am]

BILLING CODE 4120–01–P

DEPARTMENT OF HEALTH AND HUMAN SERVICES

Centers for Medicare & Medicaid Services

[Document Identifier: CMS–10404]

Agency Information Collection Activities: Proposed Collection; Comment Request

AGENCY: Centers for Medicare & Medicaid Services, HHS.

In compliance with the requirement of section 3506(c)(2)(A) of the Paperwork Reduction Act of 1995, the Centers for Medicare & Medicaid Services (CMS) is publishing the following summary of proposed collections for public comment. Interested persons are invited to send comments regarding this burden estimate or any other aspect of this collection of information, including any of the following subjects: (1) The necessity and utility of the proposed information collection for the proper performance of the agency's functions; (2) the accuracy of the estimated burden; (3) ways to enhance the quality, utility, and clarity of the information to be collected; and (4) the use of automated collection techniques or other forms of information technology to minimize the information collection burden.

1. *Type of Information Collection Request:* New collection; *Title of Information Collection:* National Balancing Indicators Project (NBIP) Direct Service Workforce Data Collection Effort; *Use:* The overall purpose of this project is to assist CMS State Profiling Tool (SPT) grantees to collect core direct service workforce data elements by population and setting and build the infrastructure needed to track these workforce indicators over time; *Form Number:* CMS–10404 (OMB 0938–New); *Frequency:* Once; *Affected Public:* Private Sector: Business or other for-profit and not-for-profit institutions, and Individuals; *Number of Respondents:* 68,160; *Total Annual Responses:* 68,160 (one-time); *Total Annual Hours:* 57,038. (For policy questions regarding this collection contact Jean Accius at 410–786–3270. For all other issues call 410–786–1326.)

To obtain copies of the supporting statement and any related forms for the proposed paperwork collections referenced above, access CMS' Web Site address at *http://www.cms.hhs.gov/PaperworkReductionActof1995*, or E-mail your request, including your address, phone number, OMB number, and CMS document identifier, to *Paperwork@cms.hhs.gov,* or call the Reports Clearance Office on (410) 786–1326.

In commenting on the proposed information collections please reference the document identifier or OMB control number. To be assured consideration, comments and recommendations must be submitted in one of the following ways by *October 25, 2011:*

1. *Electronically.* You may submit your comments electronically to *http://www.regulations.gov.* Follow the instructions for ''Comment or Submission'' or ''More Search Options'' to find the information collection document(s) accepting comments.

2. *By regular mail.* You may mail written comments to the following address: CMS, Office of Strategic Operations and Regulatory Affairs, Division of Regulations Development, Attention: Document Identifier—CMS–10404, Room C4–26–05, 7500 Security Boulevard, Baltimore, Maryland 21244–1850.

Dated: August 23, 2011.

Michelle Shortt,

Director, Regulations Development Group, Office of Strategic Operations and Regulatory Affairs.

[FR Doc. 2011–21903 Filed 8–25–11; 8:45 am]

BILLING CODE 4120–01–P

DEPARTMENT OF HEALTH AND HUMAN SERVICES

Centers for Medicare & Medicaid Services

[CMS–3252–N]

Medicare Program; Meeting of the Medicare Evidence Development and Coverage Advisory Committee—November 9, 2011

AGENCY: Centers for Medicare & Medicaid Services (CMS), HHS.

ACTION: Notice of meeting.

SUMMARY: This notice announces that a public meeting of the Medicare Evidence Development & Coverage Advisory Committee (MEDCAC) (''Committee'') will be held on Wednesday, November 9, 2011. The Committee generally provides advice and recommendations concerning the adequacy of scientific evidence needed to determine whether certain medical items and services can be covered under the Medicare statute. This meeting will focus on the use of electrocardiogram (ECG) based signal analysis technologies to detect myocardial ischemia or coronary artery disease. This meeting is open to the public in accordance with

the Federal Advisory Committee Act (5 U.S.C. App. 2, section 10(a)).

DATES: *Meeting Date:* The public meeting will be held on Wednesday, November 9, 2011 from 7:30 a.m. until 4:30 p.m., Eastern Daylight Time (EDT).

Deadline for Submission of Written Comments: Written comments must be received at the address specified in the **ADDRESSES** section of this notice by 5 p.m. EDT, Tuesday, October 11, 2011. Once submitted, all comments are final.

Deadlines for Speaker Registration and Presentation Materials: The deadline to register to be a speaker and to submit PowerPoint presentation materials and writings that will be used in support of an oral presentation, is 5 p.m., EDT on Tuesday, October 11, 2011. Speakers may register by phone or via e-mail by contacting the person listed in the **FOR FURTHER INFORMATION CONTACT** section of this notice. Presentation materials must be received at the address specified in the **ADDRESSES** section of this notice.

Deadline for All Other Attendees Registration: Individuals may register online at *http://www.cms.gov/apps/events/upcomingevents.asp?strOrderBy=1&type=3* or by phone by contacting the person listed in the **FOR FURTHER INFORMATION CONTACT** section of this notice by 5 p.m. EDT, Friday, November 4, 2011.

We will be broadcasting the meeting live via Webcast at *http://www.cms.gov/live/.*

Deadline for Submitting a Request for Special Accommodations: Persons attending the meeting who are hearing or visually impaired, or have a condition that requires special assistance or accommodations, are asked to contact the Executive Secretary as specified in the **FOR FURTHER INFORMATION CONTACT** section of this notice no later than 5 p.m., EDT Friday, October 21, 2011.

ADDRESSES: *Meeting Location:* The meeting will be held in the main auditorium of the Centers for Medicare & Medicaid Services, 7500 Security Boulevard, Baltimore, MD 21244.

Submission of Presentations and Comments: Presentation materials and written comments that will be presented at the meeting must be submitted via e-mail to *MedCACpresentations@cms.hhs.gov* or by regular mail to the contact listed in the **FOR FURTHER INFORMATION CONTACT** section of this notice by the date specified in the **DATES** section of this notice.

FOR FURTHER INFORMATION CONTACT: Maria Ellis, Executive Secretary for MEDCAC, Centers for Medicare & Medicaid Services, Office of Clinical Standards and Quality, Coverage and Analysis Group, S3–02–01, 7500 Security Boulevard, Baltimore, MD 21244 or contact Ms. Ellis by phone (410–786–0309) or via e-mail at *Maria.Ellis@cms.hhs.gov.*

SUPPLEMENTARY INFORMATION:

I. Background

MEDCAC, formerly known as the Medicare Coverage Advisory Committee (MCAC), provides advice and recommendations to CMS regarding clinical issues. (For more information on MCAC, see the December 14, 1998 **Federal Register** (63 FR 68780).) This notice announces the November 9, 2011, public meeting of the Committee. During this meeting, the Committee will discuss the currently available evidence regarding the use of ECG based signal analysis technologies to detect myocardial ischemia or coronary artery disease.

Background information about this topic, including panel materials, is available at *http://www.cms.gov/medicare-coverage-database/indexes/medcac-meetings-index.aspx?bc=BAAAAAAAAAAA&*. CMS will no longer be providing paper copies of the handouts for the meeting. Electronic copies of all the meeting materials will be on the CMS Web site no later than 2 business days before the meeting. We encourage the participation of appropriate organizations with expertise in cardiovascular diseases.

II. Meeting Format

This meeting is open to the public. The Committee will hear oral presentations from the public for approximately 45 minutes. Time allotted for each presentation may be limited. If the number of registrants requesting to speak is greater than can be reasonably accommodated during the scheduled open public hearing session, CMS may conduct a lottery to determine the speakers for the scheduled open public hearing session. The contact person will notify interested persons regarding their request to speak by October 13, 2011. Your comments should focus on issues specific to the list of topics that we have proposed to the Committee. The list of research topics to be discussed at the meeting will be available on the following Web site prior to the meeting: *http://www.cms.gov/medicare-coverage-database/indexes/medcac-meetings-index.aspx?bc=BAAAAAAAAAAA&.* We require that you declare at the meeting whether you have any financial involvement with manufacturers (or their competitors) of any items or services being discussed.

The Committee will deliberate openly on the topics under consideration. Interested persons may observe the deliberations, but the Committee will not hear further comments during this time except at the request of the chairperson. The Committee will also allow a 15-minute unscheduled open public session for any attendee to address issues specific to the topics under consideration. At the conclusion of the day, the members will vote and the Committee will make its recommendation(s) to CMS.

III. Registration Instructions

CMS' Coverage and Analysis Group is coordinating meeting registration. While there is no registration fee, individuals must register to attend. You may register online at *http://www.cms.gov/apps/events/upcomingevents.asp?strOrderBy=1&type=3* or by phone by contacting the person listed in the **FOR FURTHER INFORMATION CONTACT** section of this notice by the deadline listed in the **DATES** section of this notice. Please provide your full name (as it appears on your state-issued driver's license), address, organization, telephone, fax number(s), and e-mail address. You will receive a registration confirmation with instructions for your arrival at the CMS complex or you will be notified the seating capacity has been reached.

IV. Security, Building, and Parking Guidelines

This meeting will be held in a Federal government building; therefore, Federal security measures are applicable. We recommend that confirmed registrants arrive reasonably early, but no earlier than 45 minutes prior to the start of the meeting, to allow additional time to clear security. Security measures include the following:

- Presentation of government-issued photographic identification to the Federal Protective Service or Guard Service personnel.
- Inspection of vehicle's interior and exterior (this includes engine and trunk inspection) at the entrance to the grounds. Parking permits and instructions will be issued after the vehicle inspection.
- Inspection, via metal detector or other applicable means of all persons brought entering the building. We note that all items brought into CMS, whether personal or for the purpose of presentation or to support a presentation, are subject to inspection. We cannot assume responsibility for coordinating the receipt, transfer,

transport, storage, set-up, safety, or timely arrival of any personal belongings or items used for presentation or to support a presentation.

Note: Individuals who are not registered in advance will not be permitted to enter the building and will be unable to attend the meeting. The public may not enter the building earlier than 45 minutes prior to the convening of the meeting. All visitors must be escorted in areas other than the lower and first floor levels in the Central Building.

Authority: 5 U.S.C. App. 2, section 10(a).

(Catalog of Federal Domestic Assistance Program No. 93.773, Medicare—Hospital Insurance; and Program No. 93.774, Medicare—Supplementary Medical Insurance Program)

Dated: August 17, 2011.

Patrick Conway,

CMS Chief Medical Officer and Director, Office of Clinical Standards and Quality, Centers for Medicare & Medicaid Services.

[FR Doc. 2011–21706 Filed 8–25–11; 8:45 am]

BILLING CODE 4120–01–P

DEPARTMENT OF HEALTH AND HUMAN SERVICES

Centers for Medicare & Medicaid Services

[CMS–3251–N2]

Medicare Program; Meeting of the Medicare Evidence Development and Coverage Advisory Committee; Cancellation of the September 21, 2011 Meeting

AGENCY: Centers for Medicare & Medicaid Services (CMS), HHS.

ACTION: Notice of meeting.

SUMMARY: This notice announces the cancellation of the September 21, 2011 public meeting of the Medicare Evidence Development & Coverage Advisory Committee (MEDCAC) (''Committee'') that was published in the July 22, 2011 **Federal Register** (76 FR 44011 through 44012). This notice also announces a public meeting on Wednesday, March 21, 2012. The Committee generally provides advice and recommendations concerning the adequacy of scientific evidence needed to determine whether certain medical items and services can be covered under the Medicare statute. This meeting will focus on the currently available evidence regarding antivascular endothelial growth factor (anti-VEGF) treatment of diabetic macular edema (DME). This meeting is open to the public in accordance with the Federal Advisory Committee Act (5 U.S.C. App. 2, section 10(a)).

DATES: *Meeting Date:* The public meeting will be held on Wednesday, March 21, 2012 from 7:30 a.m. until 4:30 p.m., Daylight Saving Time (DST).

Deadline for Submission of Written Comments: Written comments must be received at the address specified in the **ADDRESSES** section of this notice by 5 p.m. Eastern Standard Time (EST), Tuesday, February 21, 2012. Once submitted, all comments are final.

Deadlines for Speaker Registration and Presentation Materials: The deadline to register to be a speaker and to submit PowerPoint presentation materials and writings that will be used in support of an oral presentation, is 5 p.m., EST on Tuesday, February 21, 2012. Speakers may register by phone or via e-mail by contacting the person listed in the **FOR FURTHER INFORMATION CONTACT** section of this notice. Presentation materials must be received at the address specified in the **ADDRESSES** section of this notice.

Deadline for All Other Attendees Registration: Individuals may register online at *http://www.cms.gov/apps/events/upcomingevents.asp?strOrderBy=1&type=3* or by phone by contacting the person listed in the **FOR FURTHER INFORMATION CONTACT** section of this notice by 5 p.m. DST, Friday, March 16, 2012.

We will be broadcasting the meeting live via Webcast at *http://www.cms.gov/live/.*

Deadline for Submitting a Request for Special Accommodations: Persons attending the meeting who are hearing or visually impaired, or have a condition that requires special assistance or accommodations, are asked to contact the Executive Secretary as specified in the **FOR FURTHER INFORMATION CONTACT** section of this notice no later than 5 p.m., EST Friday, March 2, 2012.

ADDRESSES: *Meeting Location:* The meeting will be held in the main auditorium of the Centers for Medicare & Medicaid Services, 7500 Security Boulevard, Baltimore, MD 21244.

Submission of Presentations and Comments: Presentation materials and written comments that will be presented at the meeting must be submitted via e-mail to *MedCACpresentations@cms.hhs.gov* or by regular mail to the contact listed in the **FOR FURTHER INFORMATION CONTACT** section of this notice by the date specified in the **DATES** section of this notice.

FOR FURTHER INFORMATION CONTACT: Maria Ellis, Executive Secretary for MEDCAC, Centers for Medicare & Medicaid Services, Office of Clinical Standards and Quality, Coverage and Analysis Group, S3–02–01, 7500 Security Boulevard, Baltimore, MD 21244 or contact Ms. Ellis by phone (410–786–0309) or via e-mail at *Maria.Ellis@cms.hhs.gov.*

SUPPLEMENTARY INFORMATION:

I. Background

MEDCAC, formerly known as the Medicare Coverage Advisory Committee (MCAC), provides advice and recommendations to CMS regarding clinical issues. (For more information on MCAC, see the December 14, 1998 **Federal Register** (63 FR 68780).) This notice announces the March 21, 2012, public meeting of the Committee. During this meeting, the Committee will discuss the currently available evidence regarding antivascular endothelial growth factor (anti-VEGF) treatment of diabetic macular edema (DME). Background information about this topic, including panel materials, is available at *http://www.cms.gov/medicare-coverage-database/indexes/medcac-meetings-index.aspx?bc=BAAAAAAAAAAA&.* CMS will no longer be providing paper copies of the handouts for the meeting. Electronic copies of all the meeting materials will be on the CMS Web site no later than 2 business days before the meeting. We encourage the participation of appropriate organizations with expertise in the treatment of diabetic retinopathy (DR) and DME.

II. Meeting Format

This meeting is open to the public. The agenda for the day of the meeting offers two opportunities for the public to participate as either a registered scheduled speaker or an unscheduled speaker. The Committee will hear oral presentations from the registered scheduled speakers for approximately 45 minutes. Time allotted for each presentation may be limited. If the number of registrants requesting to speak is greater than can be reasonably accommodated during the scheduled open public hearing session, CMS may conduct a lottery to determine the speakers for the scheduled open public hearing session. The contact person will notify interested persons regarding their request to speak by February 23, 2012. Your comments should focus on issues specific to the list of topics that we have proposed to the Committee. The list of research topics to be discussed at the meeting will be available on the following Web site prior to the meeting: *http://www.cms.gov/medicare-coverage-database/indexes/medcac-meetings-index.aspx?bc=BAAAAAAAAAAA&.* We require that you declare at the

meeting whether you have any financial involvement with manufacturers (or their competitors) of any items or services being discussed.

The Committee will deliberate openly on the topics under consideration. Interested persons may observe the deliberations, but the Committee will not hear further comments during this time except at the request of the chairperson. The Committee will also allow a 15-minute open public session for any unscheduled speaker to address issues specific to the topics under consideration. At the conclusion of the day, the members will vote and the Committee will make its recommendation(s) to CMS.

III. Registration Instructions

CMS' Coverage and Analysis Group is coordinating meeting registration. While there is no registration fee, individuals must register to attend. You may register online at *http://www.cms.gov/apps/events/upcomingevents.asp?strOrderBy=1&type=3* or by phone by contacting the person listed in the **FOR FURTHER INFORMATION CONTACT** section of this notice by the deadline listed in the **DATES** section of this notice. Please provide your full name (as it appears on your state-issued driver's license), address, organization, telephone, fax number(s), and e-mail address. You will receive a registration confirmation with instructions for your arrival at the CMS complex or you will be notified the seating capacity has been reached.

IV. Security, Building, and Parking Guidelines

This meeting will be held in a Federal government building; therefore, Federal security measures are applicable. We recommend that confirmed registrants arrive reasonably early, but no earlier than 45 minutes prior to the start of the meeting, to allow additional time to clear security. Security measures include the following:

- Presentation of government-issued photographic identification to the Federal Protective Service or Guard Service personnel.
- Inspection of vehicle's interior and exterior (this includes engine and trunk inspection) at the entrance to the grounds. Parking permits and instructions will be issued after the vehicle inspection.
- Inspection, via metal detector or other applicable means of all persons brought entering the building. We note that all items brought into CMS, whether personal or for the purpose of presentation or to support a presentation, are subject to inspection. We cannot assume responsibility for coordinating the receipt, transfer, transport, storage, set-up, safety, or timely arrival of any personal belongings or items used for presentation or to support a presentation.

Note: Individuals who are not registered in advance will not be permitted to enter the building and will be unable to attend the meeting. The public may not enter the building earlier than 45 minutes prior to the convening of the meeting. All visitors must be escorted in areas other than the lower and first floor levels in the Central Building.

Authority: 5 U.S.C. App. 2, section 10(a).

(Catalog of Federal Domestic Assistance Program No. 93.773, Medicare—Hospital Insurance; and Program No. 93.774, Medicare—Supplementary Medical Insurance Program)

Dated: August 17, 2011.

Patrick Conway,

CMS Chief Medical Officer and Director, Office of Clinical Standards and Quality Centers for Medicare & Medicaid Services.

[FR Doc. 2011–21708 Filed 8–25–11; 8:45 am]

BILLING CODE 4120–01–P

DEPARTMENT OF HEALTH AND HUMAN SERVICES

Food and Drug Administration

[Docket No. FDA–2011–N–0528]

Food Safety Modernization Act Domestic and Foreign Facility Reinspections, Recall, and Importer Reinspection User Fee Rates for Fiscal Year 2012; Correction

AGENCY: Food and Drug Administration, HHS.

ACTION: Notice; correction.

SUMMARY: The Food and Drug Administration (FDA) is correcting a notice that appeared in the **Federal Register** of August 1, 2011 (76 FR 45820). The document announced the fiscal year 2012 fee rates for certain domestic and foreign facility reinspections, failure to comply with a recall order, and importer reinspections that are mandated in the FDA Food Safety Modernization Act (FSMA). The document was published with two typographical errors. This document corrects those errors.

FOR FURTHER INFORMATION CONTACT: Amy Waltrip, 12420 Parklawn Dr., Rm. 2012, Rockville, MD 20857, 301–796–8811, e-mail: *Amy.Waltrip@fda.hhs.gov.*

SUPPLEMENTARY INFORMATION: In FR Doc. FDA–2011–19331, appearing on page 45820 in the **Federal Register** of Monday, August 1, 2011, the following corrections are made:

1. On page 45822, in the second column, in the first line, ''$335'' is corrected to read ''$325''.
2. On page 45822, in the second column, in ''Table 3—FSMA Fee Schedule for FY 2012,'' ''$335'' is corrected to read ''$325''.

Dated: August 19, 2011.

Leslie Kux,

Acting Assistant Commissioner for Policy.

[FR Doc. 2011–21895 Filed 8–25–11; 8:45 am]

BILLING CODE 4160–01–P

DEPARTMENT OF HEALTH AND HUMAN SERVICES

Health Resources and Services Administration

Agency Information Collection Activities: Proposed Collection: Comment Request

In compliance with the requirement for opportunity for public comment on proposed data collection projects (section 3506(c)(2)(A) of Title 44, United States Code, as amended by the Paperwork Reduction Act of 1995, Pub. L. 104–13), the Health Resources and Services Administration (HRSA) publishes periodic summaries of proposed projects being developed for submission to the Office of Management and Budget (OMB) under the Paperwork Reduction Act of 1995. To request more information on the proposed project or to obtain a copy of the data collection plans and draft instruments, e-mail *paperwork@hrsa.gov* or call the HRSA Reports Clearance Officer at (301) 443–1129.

Comments are invited on: (a) Whether the proposed collection of information is necessary for the proper performance of the functions of the Agency; (b) the accuracy of the Agency's estimate of the burden of the proposed collection of information; (c) ways to enhance the quality, utility, and clarity of the information to be collected; and (d) ways to minimize the burden of the collection of information on respondents, including through the use of automated collection techniques or other forms of information technology.

Proposed Project: National Health Service Corps Site Survey (OMB No. 0915–0232)—Revision

The Health Resources and Services Administration (HRSA), Bureau of Clinician Recruitment and Service (BCRS) places National Health Service Corps (NHSC) health care professionals at sites that provide services to underserved and vulnerable populations. The NHSC Site Survey

revised and renames what was previously known as the NHSC Uniform Data System (UDS) Report. The survey is completed annually by sites that receive an NHSC provider and are not currently receiving HRSA grant support. The NHSC Site Survey provides information that is utilized for monitoring and evaluating program operations and effectiveness, in addition to accurately reporting the scope of supported activities.

The annual estimate of burden is as follows:

Instrument	Number of respondents	Responses per respondent	Total responses	Hours per response	Total burden hours
NHSC Site Survey	1200	1	1200	27	32,400

E-mail comments to *paperwork@hrsa.gov* or mail the HRSA Reports Clearance Officer, Room 10–33, Parklawn Building, 5600 Fishers Lane, Rockville, MD 20857. Written comments should be received within 60 days of this notice.

Dated: August 22, 2011.

Reva Harris,

Acting Director, Division of Policy and Information Coordination.

[FR Doc. 2011–21942 Filed 8–25–11; 8:45 am]

BILLING CODE 4165–15–P

DEPARTMENT OF HEALTH AND HUMAN SERVICES

National Institutes of Health

Center for Scientific Review; Notice of Closed Meetings

Pursuant to section 10(d) of the Federal Advisory Committee Act, as amended (5 U.S.C. App.), notice is hereby given of the following meetings.

The meetings will be closed to the public in accordance with the provisions set forth in sections 552b(c)(4) and 552b(c)(6), Title 5 U.S.C., as amended. The grant applications and the discussions could disclose confidential trade secrets or commercial property such as patentable material, and personal information concerning individuals associated with the grant applications, the disclosure of which would constitute a clearly unwarranted invasion of personal privacy.

Name of Committee: Healthcare Delivery and Methodologies Integrated Review Group; Community-Level Health Promotion Study Section.

Date: September 26–27, 2011.

Time: 8:30 a.m. to 5 p.m.

Agenda: To review and evaluate grant applications.

Place: Hyatt Regency Bethesda, One Bethesda Metro Center, 7400 Wisconsin Avenue, Bethesda, MD 20814.

Contact Person: Jacinta Bronte-Tinkew, PhD, Scientific Review Officer, Center for Scientific Review, National Institutes of Health, 6701 Rockledge Drive, Room 3164, MSC 7770, Bethesda, MD 20892. (301) 806–0009. *brontetinkewjm@csr.nih.gov.*

Name of Committee: Center for Scientific Review Special Emphasis Panel; Member Conflict: Cancer Biology and Genetics.

Date: September 27–28, 2011.

Time: 1 p.m. to 5 p.m.

Agenda: To review and evaluate grant applications.

Place: National Institutes of Health, 6701 Rockledge Drive, Bethesda, MD 20892. (Virtual Meeting.)

Contact Person: Nywana Sizemore, PhD, Scientific Review Officer, Center for Scientific Review, National Institutes of Health, 6701 Rockledge Drive, Room 6204, MSC 7804, Bethesda, MD 20892. 301–435–1718. *sizemoren@csr.nih.gov.*

Name of Committee: Cell Biology Integrated Review Group; Development—2 Study Section.

Date: September 29–30, 2011.

Time: 8 a.m. to 5 p.m.

Agenda: To review and evaluate grant applications.

Place: St. Gregory Hotel, 2033 M Street, NW., Washington, DC 20036.

Contact Person: Rass M Shayiq, PhD, Scientific Review Officer, Center for Scientific Review, National Institute of Health, 6701 Rockledge Drive, Room 2182, MSC 7818, Bethesda, MD 20892, (301) 435–2359, *shayiqr@csr.nih.gov.*

Name of Committee: Bioengineering Sciences & Technologies Integrated Review Group; Modeling and Analysis of Biological Systems Study Section.

Date: September 29, 2011.

Time: 8 a.m. to 5 p.m.

Agenda: To review and evaluate grant applications.

Place: Courtyard by Marriott, 5520 Wisconsin Avenue, Chevy Chase, MD 20815.

Contact Person: Raymond Jacobson, PhD, Scientific Review Officer, Center for Scientific Review, National Institutes of Health, 6701 Rockledge Drive, Room 5858, MSC 7849, Bethesda, MD 20892, 301–996–7702, *jacobsonrh@csr.nih.gov.*

Name of Committee: Population Sciences and Epidemiology Integrated Review Group; Kidney, Nutrition, Obesity and Diabetes Study Section.

Date: September 30, 2011.

Time: 7 a.m. to 6 p.m.

Agenda: To review and evaluate grant applications.

Place: Orlando World Center Marriott, 8701 World Center Drive, Orlando, FL 32821.

Contact Person: Fungai Chanetsa, PhD, Scientific Review Officer, Center for Scientific Review, National Institutes of Health, 6701 Rockledge Drive, Room 3135, MSC 7770, Bethesda, MD 20892. 301–408–9436. *fungai.chanetsa@nih.hhs.gov.*

Name of Committee: Center for Scientific Review Special Emphasis Panel; Cellular and Molecular Neuroscience.

Date: September 30, 2011.

Time: 1 p.m. to 4 p.m.

Agenda: To review and evaluate grant applications.

Place: National Institutes of Health, 6701 Rockledge Drive, Bethesda, MD 20892. (Telephone Conference Call.)

Contact Person: Laurent Taupenot, Ph.D., Scientific Review Officer, Center for Scientific Review, National Institutes of Health, 6701 Rockledge Drive, Room 4811, MSC 7850, Bethesda, MD 20892. 301–435–1203. *taupenol@csr.nih.gov.*

(Catalogue of Federal Domestic Assistance Program Nos. 93.306, Comparative Medicine; 93.333, Clinical Research, 93.306, 93.333, 93.337, 93.393–93.396, 93.837–93.844, 93.846–93.878, 93.892, 93.893, National Institutes of Health, HHS)

Dated: August 18, 2011.

Jennifer S. Spaeth,

Director, Office of Federal Advisory Committee Policy.

[FR Doc. 2011–21767 Filed 8–25–11; 8:45 am]

BILLING CODE 4140–01–P

DEPARTMENT OF HEALTH AND HUMAN SERVICES

National Institutes of Health

Center for Scientific Review; Notice of Closed Meeting

Pursuant to section 10(d) of the Federal Advisory Committee Act, as amended (5 U.S.C. App.), notice is hereby given of the following meeting. The meeting will be closed to the public in accordance with the provisions set forth in sections 552b(c)(4) and 552b(c)(6), Title 5 U.S.C., as amended. The grant applications and the discussions could disclose confidential trade secrets or commercial property such as patentable material, and personal information concerning individuals associated with the grant applications, the disclosure of which would constitute a clearly unwarranted invasion of personal privacy.

Name of Committee: Center for Scientific Review Special Emphasis Panel; Academic Research Enhancement Award (Parent 15).

Date: September 8, 2011.

Time: 11:30 a.m. to 1:30 p.m.

Agenda: To review and evaluate grant applications.

Place: National Institutes of Health, 6701 Rockledge Drive, Bethesda, MD 20892. (Telephone Conference Call.)

Contact Person: Monica Basco, PhD, Scientific Review Officer,Center for Scientific Review, National Institutes of Health, 6701 Rockledge Drive, Room 3220, MSC 7808, Bethesda, MD 20892, 301–496–7010, *bascoma@mail.nih.gov.*

This notice is being published less than 15 days prior to the meeting due to the timing limitations imposed by the review and funding cycle.

(Catalogue of Federal Domestic Assistance Program Nos. 93.306, Comparative Medicine; 93.333, Clinical Research, 93.306, 93.333, 93.337, 93.393–93.396, 93.837–93.844, 93.846–93.878, 93.892, 93.893, National Institutes of Health, HHS)

Dated: August 19, 2011.

Jennifer S. Spaeth,

Director, Office of Federal Advisory Committee Policy.

[FR Doc. 2011–21765 Filed 8–25–11; 8:45 am]

BILLING CODE 4140–01–P

DEPARTMENT OF HEALTH AND HUMAN SERVICES

National Institutes of Health

Prospective Grant of Exclusive License: Conjugate Vaccines Against *B. anthracis* (Anthrax) and Monoclonal Antibodies Against Anthrax

AGENCY: National Institutes of Health, Public Health Service, HHS.

ACTION: Notice.

SUMMARY: This is notice, in accordance with 35 U.S.C. 209(c)(1) and 37 CFR 404.7(a)(1)(i), that the National Institutes of Health (NIH), Department of Health and Human Services (HHS), is contemplating the grant of an exclusive license to practice the following invention as embodied in the following patent applications: (1) E–146–2004/0, Purcell *et al.,* ''Monoclonal Antibodies That Neutralize Anthrax Protective Antigen (PA) Toxin'', U.S. Patent Application Number 60/639,074, filed on December 22, 2004, PCT Application Number PCT/US2005/046/790, filed on December 21, 2005, and U.S. Patent Application Number 11/793,735, filed on December 8, 2009, (2) E–123–2007/0, Purcell *et al.,* ''Monoclonal Antibodies that Neutralize *B. anthracis* Protective Antigen (PA), Lethal Factor (LF) and Edema Factor (EF)'', U.S. Patent Application Number 60/903,022, filed on February 23, 2007, PCT Application Number PCT/US2008/054609, filed on February 21, 2008, and U.S. Patent Application Number 12/528,427, filed on August 24, 2009, and European Patent Application Number 08730415.0, filed on September 23, 2009, (3) E–125–2008/0, Purcell *et al.,* ''Monoclonal Antibodies That React With the Capsule of *Bacillus anthracis'',* U.S. Patent Application Number 61/116,222, filed on November 19, 2008, PCT Application Number PCT/US2009/065198, filed on November 19, 2009, and U.S. Patent Application Number 13/130,044, filed on May 18, 2011, (4) E–343–2002/0, Schneerson *et al.,* ''gammaPGA Conjugates for Eliciting Immune Responses Directed Against *Bacillus anthracis* and Other Bacilli'', U.S. Patent Application Number 60/476,598, filed on June 5, 2003, PCT Application Number PCT/US2004/17736, filed on June 4, 2004, U.S. Patent Application Number 10/559,825, filed December 2, 2005, now U.S. Patent Number 7,803,386, European Patent Application Number 04754360.8, filed June 4, 2004, Canadian Patent Application Number 2,528,067, filed June 4, 2004, and Australian Patent Application Number 2004252091, filed June 4, 2004, now Australian Patent Number 2004252091, and (5) E–040–2005/0, Schneerson *et al.,* ''Methods for Preparing Immunogenic Conjugates'', U.S. Patent Application Number 11/005,851, filed on December 6, 2004, now U.S. Patent Number 7,625,736, PCT Application Number PCT/US2005/19678, filed June 3, 2005, European Patent Application Number 05758048.2, filed June 3, 2005, now European Patent Number 1765394 (rights were validated in Germany (Patent Number 602005015855), France (Patent Number 1765394), Great Britain (Patent Number 1765394), and Ireland (Patent Number 1765394)), Indian Patent Application Number 7703/DELNP/2006, filed June 3, 2005, Chinese Patent Application Number 200580018108.2, filed June 3, 2005, Australian Patent Application Number 2005249571, filed June 3, 2005, now Australian Patent Number 2005249571, Canadian Patent Application Number 2,568,364, filed June 3, 2005, and U.S. Patent Application Number 12/582,420, filed October 20, 2009, to Biologics Resources LLC, having a place of business in Boyds, Maryland, United States of America. The patent rights in these inventions have been assigned to the United States of America.

DATES: Only written comments and/or application for a license which are received by the NIH Office of Technology Transfer on or before September 26, 2011 will be considered.

ADDRESSES: Requests for a copy of the patent application, inquiries, comments and other materials relating to the contemplated license should be directed to: Peter Soukas, Office of Technology Transfer, National Institutes of Health, 6011 Executive Boulevard, Suite 325, Rockville, MD 20852–3804; E-mail: ps193c@nih.gov; Telephone: (301) 435–4646; Facsimile: (301) 402–0220.

SUPPLEMENTARY INFORMATION: Anthrax, whether resulting from natural or bioterrorist-associated exposure, is a constant threat to human health. The lethality of anthrax is primarily the result of the effects of anthrax toxin, which has 3 components: a receptor-binding protein known as ''protective antigen'' (PA) and 2 catalytic proteins known as ''lethal factor'' (LF) and ''edema factor'' (EF). Although production of an efficient anthrax vaccine is an ultimate goal, the benefits of vaccination can be expected only if a large proportion of the population at risk is immunized. In contrast, passive administration of neutralizing human or chimpanzee monoclonal antibody to a subject at risk for anthrax or exposed to anthrax could provide immediate efficacy for emergency prophylaxis against or treatment of anthrax.

The methods and compositions of these inventions provide a means for prevention and/or therapy of *B. anthracis* (anthrax) infection by immunization with conjugate vaccines against anthrax and/or passive immunization with monoclonal antibodies against *B. anthracis.*

The prospective exclusive license will be royalty bearing and will comply with the terms and conditions of 35 U.S.C. 209 and 37 CFR 404.7. The prospective exclusive license may be granted unless, within thirty (30) days from the date of this published Notice, NIH receives written evidence and argument that establishes that the grant of the license would not be consistent with the requirements of 35 U.S.C. 209 and 37 CFR 404.7.

The fields of use may be limited to (1) monoclonal antibodies against *B. anthracis* (anthrax) for use in humans and (2) *B. anthracis* conjugate vaccines for use in humans.

Properly filed competing applications for a license filed in response to this notice will be treated as objections to the contemplated license. Comments and objections submitted in response to this notice will not be made available for public inspection, and, to the extent permitted by law, will not be released

under the Freedom of Information Act, 5 U.S.C. 552.

Dated: August 19, 2011.

Richard U. Rodriguez,

Director, Division of Technology Development and Transfer, Office of Technology Transfer, National Institutes of Health.

[FR Doc. 2011–21771 Filed 8–25–11; 8:45 am]

BILLING CODE 4140–01–P

DEPARTMENT OF HOUSING AND URBAN DEVELOPMENT

[Docket No. FR–5477–N–34]

Federal Property Suitable as Facilities To Assist the Homeless

AGENCY: Office of the Assistant Secretary for Community Planning and Development, HUD.

ACTION: Notice.

SUMMARY: This Notice identifies unutilized, underutilized, excess, and surplus Federal property reviewed by HUD for suitability for possible use to assist the homeless.

FOR FURTHER INFORMATION CONTACT: Juanita Perry, Department of Housing and Urban Development, 451 Seventh Street SW., Room 7262, Washington, DC 20410; telephone (202) 708–1234; TTY number for the hearing- and speech-impaired (202) 708–2565, (these telephone numbers are not toll-free), or call the toll-free Title V information line at 800–927–7588.

SUPPLEMENTARY INFORMATION: In accordance with the December 12, 1988 court order in *National Coalition for the Homeless* v. *Veterans Administration,* No. 88–2503–OG (D.D.C.), HUD publishes a Notice, on a weekly basis, identifying unutilized, underutilized, excess and surplus Federal buildings and real property that HUD has reviewed for suitability for use to assist the homeless. Today's Notice is for the purpose of announcing that no additional properties have been determined suitable or unsuitable this week.

Dated: August 18, 2011.

Mark R. Johnston,

Deputy Assistant Secretary for Special Needs.

[FR Doc. 2011–21578 Filed 8–25–11; 8:45 am]

BILLING CODE 4210–67–P

DEPARTMENT OF THE INTERIOR

Bureau of Ocean Energy Management, Regulation and Enforcement

Outer Continental Shelf, Alaska OCS Region, Chukchi Sea Planning Area, Oil and Gas Lease Sale 193

AGENCY: Bureau of Ocean Energy Management, Regulation and Enforcement, Interior.

ACTION: Notice of Availability of a Final Supplemental Environmental Impact Statement

SUMMARY: The Bureau of Ocean Energy Management, Regulation and Enforcement (BOEMRE) announces the availability of a *Final Supplemental Environmental Impact Statement (SEIS) for Outer Continental Shelf (OCS) Oil and Gas Lease Sale 193, Chukchi Sea, Alaska* (OCS EIS/EA BOEMRE 2011–041).

BOEMRE prepared this *Final SEIS* pursuant to: (1) The National Environmental Policy Act of 1969 (NEPA), as amended, 42 U.S.C. 4321 *et seq.,* the Council on Environmental Quality (CEQ) regulations that implement the procedural provisions of NEPA (40 CFR parts 1500–1508); and (2) the July 21, 2010, remand order issued by the United States District Court for the District of Alaska. The *Final SEIS* augments the analysis of the *Final EIS, Oil and Gas Lease Sale 193, Chukchi Sea Planning Area* (OCS EIS/EA MMS 2007–026).

BOEMRE will issue a NEPA Record of Decision after the 30-day period during which the *Final SEIS* is available. BOEMRE gives this notice of availability in accordance with Council on Environmental Quality regulations at 40 CFR 1506.6 (b).

FOR FURTHER INFORMATION CONTACT: Ms. Sharon Warren or Mr. Mike Routhier, Bureau of Ocean Energy Management, Regulation and Enforcement, Alaska OCS Region, 3801 Centerpoint Drive, Suite 500, Anchorage, Alaska 99503–5820. You may contact Ms. Warren or Mr. Routhier by telephone at 907–334–5200.

SUPPLEMENTARY INFORMATION: In May 2007, BOEMRE (formerly the Minerals Management Service (MMS)) published the *Final EIS for Oil and Gas Lease Sale 193, Chukchi Sea* (OCS EIS/EA MMS 2007–0026), which evaluated the potential effects of the proposed sale and three alternatives: a no action alternative, and two alternatives that incorporate deferral areas of varying size along the coastward edge of the proposed sale area.

On January 31, 2008, plaintiffs filed a lawsuit challenging Chukchi Sea Oil and Gas Lease Sale 193, alleging violations of NEPA and the Endangered Species Act with the United States District Court for the District of Alaska (District Court) [*Native Village of Point Hope et al.,* v. *Salazar,* No. 1:08–cv–00004–RRB (D. Alaska)]. BOEMRE conducted the sale in February 2008. BOEMRE received high bids totaling approximately $2.6 billion and issued 487 leases.

In July 2010, the District Court remanded the matter for further NEPA analysis in accordance with its order. The District Court amended this order in August 2010. The District Court directed BOEMRE to address three concerns: (1) Analyze the environmental impact of natural gas development; (2) determine whether missing information identified by BOEMRE in the Final EIS for Chukchi Sea Lease Sale 193 was essential or relevant under 40 CFR 1502.22; and (3) determine whether the cost of obtaining the missing information was exorbitant, or the means of doing so unknown.

BOEMRE: (1) Completed *Chukchi Sea Planning Area Oil and Gas Lease Sale 193 in the Chukchi Sea, Alaska, Draft Supplemental EIS* (''SEIS'') OCS EIS/EA BOEMRE 2010–034 addressing each of these concerns; (2) published the *Draft SEIS* for public comment on October 15, 2010; and (3) provided a 45-day comment period. BOEMRE received over 150,000 comments on the *Draft SEIS.* Citing the *Deepwater Horizon* oil spill, many commenters requested an analysis of a potential blowout and oil spill during exploration. In response to those comments, BOEMRE determined it appropriate to provide analysis of a very large oil spill (''VLOS'') from a hypothetical exploration well blowout. BOEMRE prepared the *Chukchi Sea Planning Area Oil and Gas Lease Sale 193 in the Chukchi Sea, Alaska, Revised Draft Supplemental SEIS* OCS EIS/EA BOEMRE 2010–034 with the VLOS analysis and those issues under remand.

On May 27, 2011, the **Federal Register** published a Notice of Availability of the *Revised Draft SEIS* for a 45-day public comment for BOEMRE and Notice of BOEMRE filing the Revised Draft EIS with the Environmental Protection Agency. The public comment period officially closed on July 11, 2011. During the *Revised Draft SEIS* public comment period, BOEMRE received over 360,000 comment letters and cards from Federal Agencies, state and local governments, Alaska Native tribes, interested groups, and members of the public.

The *Final SEIS* completes the environmental review process and responds to the District Court's remand order. The *Final SEIS* will provide the Secretary of Interior with sufficient information and analysis to make an informed decision on whether to affirm, modify, or cancel Chukchi Sea Oil and Gas Lease Sale 193.

Final SEIS Availability: To obtain a printed copy or CD–ROM of the *Final SEIS,* you may contact the BOEMRE, Alaska OCS Region, 3801 Centerpoint Drive, Suite 500, Anchorage, Alaska 99503–5820, telephone 907–334–5200. You may also view the *Final SEIS* at the above address, on the BOEMRE Web site at *http://alaska.boemre.gov,* or at the Alaska Resources Library and Information Service, 3211 Providence Drive, Suite III. Anchorage, Alaska.

Comments: You may submit your comments on the *Final SEIS* only by one of the following two methods:

1. Mail or Delivery: In written form enclosed in an envelope labeled ''Comments on Final SEIS, Chukchi Sea Lease Sale 193'' to the Regional Director, Bureau of Ocean Energy Management, Regulation and Enforcement, Alaska OCS Region, 3801 Centerpoint Drive, Suite 500, Anchorage, Alaska 99503–5820. BOEMRE will accept hand deliveries during regular business hours—8 a.m. to 4:30 p.m., Monday through Friday, excluding holidays.

2. Federal eRulemaking Portal: Go to *http://www.regulations.gov.*

Please do not use alternative means to send your comments through the Internet. BOEMRE will not consider comments submitted other than by the above two methods. For BOEMRE to consider your comments, BOEMRE must receive your comments on or before 30 days after the publication of this notice. BOEMRE cautions that before including your address, phone number, e-mail address, or other personal identifying information in your comment, you should be aware that your entire comment, including your personal identifying information, may be made publically available at any time. While you may ask BOEMRE (prominently at the beginning of your submission) to withhold your personal identifying information from public view, BOEMRE cannot guarantee that it will be able to do so. BOEMRE will not consider anonymous comments.

Dated: August 1, 2011.

L. Renee Orr,

Acting Associate Director for Offshore Energy and Minerals Management.

[FR Doc. 2011–21916 Filed 8–25–11; 8:45 am]

BILLING CODE 4310–MR–P

DEPARTMENT OF THE INTERIOR

Fish and Wildlife Service

[FWS–R8–ES–2010–N198; 80221–1113–0000–C2]

Endangered and Threatened Wildlife and Plants; Notice of Availability of a Revised Recovery Plan for the Mojave Population of the Desert Tortoise (Gopherus agassizii)

AGENCY: Fish and Wildlife Service, Interior.

ACTION: Notice of document availability.

SUMMARY: We, the Fish and Wildlife Service (Service), announce the availability of a revised recovery plan for the Mojave population of the desert tortoise under the Endangered Species Act of 1973, as amended (Act). This species is found in the Mojave and Sonoran deserts in southern California, southern Nevada, Arizona, and the southwestern tip of Utah in the United States, as well as in Sonora and northern Sinaloa in Mexico. The listed Mojave population of the desert tortoise includes those animals living north and west of the Colorado River in the Mojave Desert of California, Nevada, Arizona, and southwestern Utah, and in the Sonoran (Colorado) Desert in California.

ADDRESSES: An electronic copy of the revised recovery plan is available at *http://www.fws.gov/endangered/species/recovery-plans.html.* Alternatively, the revised recovery plan and reference materials are available by appointment, during normal business hours, at the following location: U.S. Fish and Wildlife Service, Nevada Fish and Wildlife Office, 1340 Financial Boulevard, Suite 234, Reno, NV 89502 (telephone: 775–861–6300). Requests for copies of the revised recovery plan should be addressed to the State Supervisor at the above address.

FOR FURTHER INFORMATION CONTACT: Roy Averill-Murray, Desert Tortoise Recovery Coordinator, at the above address or telephone number.

SUPPLEMENTARY INFORMATION: Recovery of endangered or threatened animals and plants is a primary goal of the Endangered Species Act (Act) (16 U.S.C. 1531 *et seq.*) and our endangered species program. Recovery means improvement of the status of listed species to the point at which listing is no longer required under the criteria set out in section 4(a)(1) of the Act. Recovery plans describe actions considered necessary for the conservation of the species, establish criteria for downlisting or delisting listed species, and estimate time and cost for implementing the measures needed for recovery. The Recovery Plan for the Mojave Population of the Desert Tortoise (*Gopherus agassizii)* was first published in 1994, and presented the status of the species, along with threats, recovery actions, and recovery criteria. Since that time a great deal of effort has been dedicated to recovery and conservation activities, and additional information has been obtained through research and observation that allows us to better focus our recovery strategy. The revised recovery plan for the Mojave Population of the desert tortoise is the focus of this notice.

Section 4(f) of the Act directs the Secretaries of Interior and Commerce to develop and implement recovery plans for species listed as endangered or threatened, unless such plans will not promote the conservation of the species. We and the National Marine Fisheries Service, as appropriate, have been delegated responsibility for administering the Act. As per Section 4(f) of the Act, we published a notice of availability for public review and comment on the draft revised recovery plan on August 4, 2008. We considered all information we received during the public comment period and revised the recovery plan accordingly.

The desert tortoise is a large, herbivorous reptile that can reach 20 to 38 centimeters (cm) (8 to 15 inches (in)) in carapace (upper shell) length and 10 to 15 cm (4 to 6 in) in shell height. Hatchlings emerge from eggs at about 5 cm (2 in) in length. Adults have a domed carapace and relatively flat, unhinged plastrons (lower shells). Their shells are high-domed and greenish-tan to dark brown in color, with tan scute (horny plate on the shell) centers. Adult desert tortoises weigh 3.6 to 6.8 kilograms (8 to 15 pounds). The forelimbs have heavy, claw-like scales and are flattened for digging. Hind limbs are more elephantine.

Throughout most of the Mojave Desert, the desert tortoise occupies a variety of habitats: From flats and slopes dominated by creosote bush (*Larrea tridentata*) scrub at lower elevations, to rocky slopes in the blackbrush (*Coleogyne ramosissima*) scrub, and juniper (*Juniperus* spp.) woodland interface at higher elevations. Records of desert tortoises range from below sea level to an elevation of 2,225 meters (7,300 feet), with typical habitat characterized as creosote bush scrub below 1,677 meters (5,500 feet). Desert tortoises most commonly occur on gently sloping terrain with sandy gravel soils that are friable for burrowing and where there is sparse cover of low-

growing shrubs and a high diversity of both perennial and annual plants.

The desert tortoise occurs in the Mojave and Sonoran deserts in southern California, southern Nevada, Arizona, and the southwestern tip of Utah in the United States, as well as in Sonora and northern Sinaloa in Mexico. The listed Mojave population of the desert tortoise includes those animals living north and west of the Colorado River in the Mojave Desert of California, Nevada, Arizona, and southwestern Utah, and in the Sonoran (Colorado) Desert in California. The first recovery plan was published in 1994, and critical habitat was also designated in all four States supporting the species.

Three tortoise species in the genus *Gopherus* occur in the United States, and another occurs in Mexico; however, all are geographically separated from the Mojave population. With the exception of a geographically undefined Mojave-genotype population (that also shares Mojave phenotype and habitat-use characteristics with the Mojave population) in the vicinity of the Black Mountains in Mohave County, Arizona, the Sonoran population of the desert tortoise is significantly different both genetically and ecologically, but it could be confused visually with tortoises of the Mojave population; therefore, the Service determined the Sonoran population also warranted protection as a threatened species under section 4(e) of the Endangered Species Act (similarity of appearance) when located outside of its natural range. On December 14, 2010, in response to a petition to list the Sonoran population of the desert tortoise under the Endangered Species Act, the Service found that listing the Sonoran population is warranted but precluded by higher priority actions to amend the Lists of Endangered and Threatened Wildlife and Plants.

The vast majority of threats to the desert tortoise or its habitat are associated with human land uses. The threats identified in the 1994 Recovery Plan, and that formed the basis for listing the tortoise as a threatened species, continue to affect the species. Habitat loss, degradation, and fragmentation from urbanization, off-highway vehicle use in the desert, linear features such as roads and utility corridors, poor grazing management and mining, and military activities were cited as some of the primary reasons for the decline in desert tortoise populations. Disease and increased incidence of fire in the Mojave Desert have also been implicated in desert tortoise declines.

Despite clear demonstration that these threats impact individual tortoises, there are few data available to evaluate or quantify the effects of threats on desert tortoise populations. While current research results can lead to predictions about how local tortoise abundance should be affected by the presence of threats, quantitative estimates of the magnitude of these threats, or of their relative importance, have not yet been developed. Thus, it would be challenging to recover the desert tortoise by singling out a particular threat or subset of threats to the exclusion of others. In the revised recovery plan, we underscore the need to build on our understanding of individual threats but also place new emphasis on understanding their multiple and synergistic effects, due to the failure of simple threat models to inform us about tortoise abundance.

The revised strategy emphasizes partnerships to direct and maintain focus on implementing recovery actions, and a system to track implementation and effectiveness of those actions. The strategic elements listed in the revised Recovery Plan are part of a multi-faceted approach designed to improve the 1994 Recovery Plan. The goals of the revised recovery plan are recovery and delisting of the desert tortoise. The objectives and recovery criteria address demography (maintain self-sustaining populations of desert tortoises within each recovery unit into the future); distribution (maintain well-distributed populations of desert tortoises throughout each recovery unit); and habitat (ensure that habitat within each recovery unit is protected and managed to support long-term viability of desert tortoise populations).

The strategic elements include the following: (1) Develop, support, and build partnerships to facilitate recovery; (2) protect existing populations and habitat, instituting habitat restoration where necessary; (3) augment depleted populations in a strategic manner; (4) monitor progress toward recovery; (5) conduct applied research and modeling in support of recovery efforts within a strategic framework; and (6) implement a formal adaptive management program through which information gained while implementing the above strategic elements is used to revise and improve the recovery plan and recommend management actions on a regular basis. The success of this revised recovery strategy will rely heavily upon the involvement of our partners and our commitment to implementing the strategic elements listed above, coupled with a functioning adaptive management program.

We developed our recovery plan under the authority of section 4(f) of the Endangered Species Act, 16 U.S.C. 1533(f). We publish this notice under section 4(f) Endangered Species Act of 1973, as amended (16 U.S.C. 1531 *et seq.*).

Dated: August 22, 2011.

Ren Lohoefener,

Regional Director, Pacific Southwest Region.

[FR Doc. 2011–21879 Filed 8–25–11; 8:45 am]

BILLING CODE 4310–55–P

DEPARTMENT OF THE INTERIOR

Bureau of Land Management

[LLNM922000 L13200000.EL0000; NMNM 126245]

Notice of Invitation To Participate; Coal Exploration License Application NMNM 126245, New Mexico

AGENCY: Bureau of Land Management, Interior.

ACTION: Notice.

SUMMARY: Pursuant to the Mineral Leasing Act of 1920, as amended by the Federal Coal Leasing Amendments Act of 1976, and to Bureau of Land Management (BLM) regulations, all interested parties are hereby invited to participate with the Peabody Natural Resources Company, on a pro rata cost-sharing basis, in a program for the exploration of coal deposits owned by the United States of America in lands located in McKinley County, New Mexico.

DATES: This notice of invitation will be published in the *Gallup Independent* newspaper once each week for 2 consecutive weeks beginning the week of August 22, 2011, and in the **Federal Register**. Any party electing to participate in this exploration program must send written notice referencing the Exploration License Application serial number NMNM 126245 to both the BLM and Peabody Natural Resources Company as provided in the **ADDRESSES** section below no later than 30 days after publication of this notice in the **Federal Register** or 10 calendar days after the last publication of this notice in the *Gallup Independent* newspaper, whichever is later.

ADDRESSES: Copies of the proposed exploration plan (case file NMNM 126245) are available for review from 9 a.m. to 4 p.m., Monday through Friday: BLM, New Mexico State Office, 301 Dinosaur Trail, Santa Fe, New Mexico; and BLM, Farmington Field Office, 1235 La Plata Highway, Suite A, Farmington, New Mexico.

The written notice should be sent to the following addresses: State Director, BLM, New Mexico State Office, P.O. Box 27115, Santa Fe, New Mexico 87502–0115 and Peabody Natural Resources Company, 701 Market Street, Suite 832, Saint Louis, Missouri 63101–1830.

FOR FURTHER INFORMATION CONTACT: Roberta D. Sandoval at 505–954–2161, *rdsandov@blm.gov* or Powell King 505–954–2160, *pking@blm.gov.* Persons who use a telecommunications device for the deaf (TDD) may call the Federal Information Relay Service (FIRS) at 1–800–877–8339 to contact the above individuals during normal business hours. The FIRS is available 24 hours a day, 7 days a week, to leave a message or question with the above individuals. You will receive a reply during normal business hours.

SUPPLEMENTARY INFORMATION: The purpose of the exploration program is to gain structural and quality information about the coal. The BLM regulations at 43 CFR 3410 require the publication of an invitation to participate in the coal exploration in the **Federal Register**. The Federal coal resources included in the exploration license application are located in the following described lands in McKinley County, New Mexico, and are described as follows:

NM Principal Meridian

T. 15 N., R. 8 W.,
Sec. 6, E½, and portion of E½W½ (lying east of road);
Sec. 8, All;
Sec. 18, E½NE¼;
Sec. 20, SE¼, NE¼, and N½NW¼;
Sec. 28, NE¼SE¼NW¼, and portion of SW¼NE¼ (lying west of Lee Ranch Coal Company permit boundary).
T. 16 N., R. 8 W.,
Sec. 6, S½NW¼SE¼;
Sec. 8, SE¼NE¼, and portion of E½E½NW¼ (lying south of road);
Sec. 20, SE¼, and SE¼NE¼;
Sec. 30, E½SE¼.
T. 17 N., R. 9 W.,
Sec. 34, All.

Containing 2,678.00 acres, more or less.

The proposed exploration program is fully described in, and will be conducted pursuant to, an exploration plan to be approved by the BLM.

Michael Tupper,

Acting Deputy State Director, Minerals.

Authority: 43 CFR 3410.2–1(c)(1).

[FR Doc. 2011–21899 Filed 8–25–11; 8:45 am]

BILLING CODE 4310–FB–P

DEPARTMENT OF THE INTERIOR

Bureau of Land Management

[LLAZP02000.L16100000 .DQ0000.LXSS089A0000.241A]

Notice of Availability of the Draft Resource Management Plan/Draft Environmental Impact Statement for the Lower Sonoran and Sonoran Desert National Monument, AZ

AGENCY: Bureau of Land Management, Interior.

ACTION: Notice of availability.

SUMMARY: In accordance with the National Environmental Policy Act of 1969, as amended, and the Federal Land Policy and Management Act of 1976, as amended, the Bureau of Land Management (BLM) has prepared a Draft Resource Management Plan (RMP) and Draft Environmental Impact Statement (EIS) for the Lower Sonoran (LS) and Sonoran Desert National Monument (SDNM) Planning Area, and by this notice, is announcing the opening of a 90-day comment period.

DATES: To ensure that comments will be considered, the BLM must receive written comments on the Draft RMP/EIS within 90 days following the date the Environmental Protection Agency publishes their notice of the Draft RMP/EIS in the **Federal Register**. The BLM will announce future meetings or hearings and any other public participation activities at least 15 days in advance through public notices, media releases, and/or mailings.

ADDRESSES: You may submit written comments related to the LS–SDNM Draft RMP/EIS by any of the following methods:

- *E-mail: blm_az_ls_sdnm_plan@blm.gov.*
- *Fax:* 623–580–5580.
- *Mail or in person:* BLM Phoenix District Office, Attention: LS–SDNM Draft RMP/EIS, 21605 North 7th Avenue, Phoenix, Arizona 85027.

FOR FURTHER INFORMATION CONTACT: Penny Foreman, RMP Project Manager, telephone: 623–580–5526; BLM Phoenix District, 21605 North 7th Avenue, Phoenix, Arizona 85027; e-mail: *blm_az_ls_sdnm_plan@blm.gov.*

SUPPLEMENTARY INFORMATION: Copies of the LS–SDNM Draft RMP/EIS are available in the BLM Phoenix District Office, at the above address, and at the following other locations:

- *http://www.blm.gov/az/st/en/prog/planning/son_des/reports.html.*
- BLM Arizona State Office, One North Central Avenue, Suite 800, Phoenix, Arizona 85004–4427.
- Apache Junction Public Library, 1177 N. Idaho Road, Apache Junction, Arizona 85219.
- Buckeye Public Library, 310 North 6th Street, Buckeye, Arizona 85326.
- Casa Grande Public Library, 449 North Dry Lake, Casa Grande, Arizona 85222.
- Gila Bend Public Library, 202 North Euclid Avenue, Gila Bend, Arizona 85337.
- Salazar-Ajo Branch Library, 33 Plaza, Ajo, Arizona 85321.

The LS–SDNM Planning Area includes approximately 8.9 million acres of public and private lands, containing about 1.4 million surface acres, and 3.9 million subsurface/mineral-split estate acres administered by the BLM. These include about 930,200 surface acres in the Lower Sonoran Field Office, referred to as the LS Decision Area, and 486,400 surface acres within the Sonoran Desert National Monument, referred to as the SDNM Decision Area.

Public scoping took place in 2002 and 2003, when two separate Notices of Intent for the LS and SDNM planning efforts were published, and 11 public scoping meetings were held. The planning efforts also included cooperation and collaboration with Federal, State, county, and local agencies, as well as 13 Tribes. The plan will consolidate or replace management guidance from the Lower Gila North Management Framework Plan of 1983, the Lower Gila South Resource Management Plan of 1988, the Phoenix Resource Area Resource Management Plan of 1989, and five plan amendments implemented between 1983 and 2005. A new RMP for the SDNM will fulfill Presidential Proclamation 7397 requirements to protect the special qualities and objects for which the Monument was designated. Scoping issues identified include wilderness characteristics, livestock grazing, recreational target and sports shooting, travel management, and energy development.

Five alternatives are analyzed in the Draft RMP/EIS. The ''no action'' alternative, Alternative A, represents the current management situation for both the LS and the SDNM Decision Areas and serves as a baseline for most resource and land-use allocations.

Alternative B identifies the greatest amount of public lands suitable for appropriate multiple uses, emphasizing opportunities for motorized and developed recreational uses while reducing opportunities for experiencing remote settings and non-motorized recreation.

Alternative C attempts to balance resource protection with human use and influence providing for a variety of uses that emphasize resource protection and conservation and propose a mix of natural processes and techniques for resource stabilization and restoration.

Alternative D places the greatest emphasis on minimizing human uses and maintaining primitive landscapes by focusing on natural processes and other unobtrusive methods for resource stabilization and restoration.

Alternative E, the Preferred Alternative, attempts to balance human use and influence with resource protection by incorporating elements from each of the other action alternatives. It provides long-term protection and conservation of resources. Pursuant to 43 CFR 1610.7–2(b), this notice announces a concurrent public comment period on proposed Areas of Critical Environmental Concern (ACECs). Under the Preferred Alternative, the BLM proposes four ACECs in the LS Decision Area and none in the SDNM Decision Area. The ACECs are: Coffeepot-Batamote (61,300 acres); Cuerda de Lena (58,500 acres); Gila River Terraces and Lower Gila Historic Trails (82,500 acres); and the Saddle Mountain Outstanding Natural Area (48,500 acres). Proposed resource use limitations common to all ACECs are:

- Public lands are maintained in public ownership;
- ACECs are exclusion areas for utility-scale renewable energy land use authorizations and new multiuse utility corridors; and,
- ACECs are closed to mineral material disposals with the exception of existing free-use permit sites.

Additional proposed resource use limitations within the Coffeepot-Batamote ACEC are:

- Motorized vehicle use is restricted from February 1 to July 31, in washes that are known or found to contain occupied Cactus Ferruginous Pygmy-Owl habitat.

Additional proposed resource use limitations within the Cuerda de Lena ACEC are:

- Recreational public access is closed during the Sonoran pronghorn fawning season (March 15 to July 15, or as determined by the Sonoran Pronghorn Recovery Team). Minor land-use authorizations are also prohibited unless deemed necessary by the authorized officer. Federal, State and local government employees and permit holders operating within the scope of their authorizations are exempt from the closure;
- Developed recreational sites are prohibited except for small, non-intrusive informational and interpretive facilities; and
- New travel routes in washes are prohibited. New routes may only be considered if deemed necessary for emergency use or other authorized administrative uses.

Additional proposed resource use limitations within the Gila River Terraces and Lower Gila Trails ACEC are:

- ACEC is open to non-renewable leasable minerals actions, but leases will contain No Surface Occupancy stipulations;
- Selected public land parcels along the Gila River, within the Gila River Terraces section of the ACEC, are closed to geophysical exploration and mineral materials disposals (see DRMP for legal descriptions); and
- Selected public land parcels along the Butterfield Overland Stage Route, within the Lower Gila Trails section of the ACEC, are closed to locatable mineral entry and exploration activities.

No additional resource use limitations are proposed for the Saddle Mountain Outstanding Natural Area ACEC.

Please note that public comments and information submitted including names, street addresses, and e-mail addresses of persons who submit comments will be available for public review and disclosure at the above BLM address during regular business hours (7:30 a.m. to 4:15 p.m.), Monday through Friday, except holidays.

Before including your address, phone number, e-mail address, or other personal identifying information in your comments, you should be aware that your entire comment, including your personal identifying information, may be made publicly available at any time. While you can ask us in your comment to withhold your personal identifying information from public review, we cannot guarantee that we will be able to do so.

Authority: 40 CFR 1506.6, 40 CFR 1506.10, 43 CFR 1610.2, 43 CFR 1610.7–2.

James G. Kenna,

Arizona State Director.

[FR Doc. 2011–21715 Filed 8–25–11; 8:45 am]

BILLING CODE 4310–32–P

DEPARTMENT OF THE INTERIOR

Bureau of Land Management

DEPARTMENT OF AGRICULTURE

Forest Service

[LLCOS010000–L16100000–DP0000]

Notice of Availability of the Supplement to the Draft Environmental Impact Statement for the Draft San Juan Land Management Plan, Colorado

AGENCY: Bureau of Land Management, Interior, Forest Service, Agriculture.

ACTION: Notice of availability.

SUMMARY: In accordance with the National Environmental Policy Act of 1969, as amended, the Forest and Rangeland Renewable Resources Planning Act of 1974, as amended by the National Forest Management Act of 1976, and the Federal Land Policy and Management Act of 1976, as amended, the Bureau of Land Management (BLM) and the U.S. Forest Service (USFS) have prepared a Supplement to the Draft Environmental Impact Statement (EIS) and the Draft Land Management Plan (LMP) for the San Juan Public Lands that was published on December 14, 2007, and by this notice, are announcing the opening of the comment period. The San Juan Public Lands Center (SJPLC) is the joint USFS/BLM Service First Office responsible for the management of BLM and USFS lands covered in the Draft LMP.

DATES: To ensure that comments will be considered, the SJPLC must receive written comments on the Supplement to the Draft LMP/EIS by November 25, 2011. The SJPLC will announce future meetings or hearings and any other public participation activities at least 15 days in advance through public notices, media releases, and/or mailings.

ADDRESSES: You may submit comments related to the Supplement to the San Juan Draft EIS and LMP by any of the following methods:

- *E-mail: comments-planrevision-sanjuan@fs.fed.us.*
- *Fax:* (970) 375–2331.
- *Mail:* San Juan Plan Revision, 15 Burnett Court, Durango, Colorado 81301.

Copies of the Supplement to the San Juan Draft EIS and LMP are available in the SJPLC at the above address; copies are also available at the following offices during regular business hours:

- Columbine Field Office, 367 Pearl St., Bayfield, CO 81122.
- Dolores Public Lands Office, 29211 Hwy. 184, Dolores, CO 81323.

• Pagosa Springs Field Office, 180 Pagosa Street, Pagosa Springs, CO 81147.

• BLM Colorado State Office, 2850 Youngfield Street, Lakewood, CO 80215.

• USDA Forest Service, Rocky Mountain Region, 740 Simms St, Golden, CO 80401.

• Libraries in Cortez, CO; Durango, CO; Pagosa Springs, CO; Colorado State University, Ft. Collins, CO; University of Colorado, Boulder, CO; and Ft. Lewis College, Durango, CO.

An electronic version can be viewed and downloaded at the project Web site: *http://ocs.fortlewis.edu/forestPlan.*

FOR FURTHER INFORMATION CONTACT: For further information contact Shannon Manfredi, Planning Team Lead, telephone (970) 385–1229; address San Juan Public Land Center, 15 Burnett Court, Durango, Colorado 81301; e-mail smanfredi@fs.fed.us. Persons who use a telecommunications device for the deaf (TDD) may call the Federal Information Relay Service (FIRS) at 1–800–877–8339 to contact the above individual during normal business hours. The FIRS is available 24 hours a day, 7 days a week, to leave a message or question with the above individual. You will receive a reply during normal business hours.

SUPPLEMENTARY INFORMATION: The planning area is located in southwest Colorado in Archuleta, Conejos, Dolores, Hinsdale, La Plata, Mineral, Montezuma, Montrose, Rio Grande, San Juan and San Miguel counties.

The Supplement to the Draft EIS was prepared to include the development potential of a shale gas play area found within the western portion of the planning area. Information about the Gothic Shale Gas Play (GSGP) area became available during the comment period on the Draft EIS and Draft LMP (between December 14, 2007, and April 2008).

The GSGP is a 646,403-acre area within Paradox Basin in Montezuma, Dolores and San Miguel Counties. The play area includes a mix of private, state, and public lands, with Federal mineral estate encompassing 57 percent of the area. Comments indicated that the shale gas formation warranted inclusion in the Draft EIS given the technological advances in directional drilling and hydraulic fracturing that made shale gas extraction more viable, economically feasible and successful in other parts of the country.

The Reasonable Foreseeable Development (RFD) scenario for oil and gas on the San Juan National Forest and BLM public lands covered by the Draft LMP was revised to include the GSGP development scenario (including trends, timelines, well numbers, infrastructure, and surface disturbance). According to the RFD, approximately 1,200 wells could be developed on Federal mineral estate lands over the next 15 years.

The supplement analyzes the consequences of the new development projections for oil and gas leasing and discloses the results of a recently completed air-quality model, as requested by the Environmental Protection Agency. The supplement does not address other issues or attempt to address comments received on the Draft LMP/Draft EIS. The supplement does not change the range of alternatives, nor add or remove any alternatives—it only adds information regarding the GSGP area and air quality model results for public review and comment. The supplement only contains new information about oil and gas leasing, and the potential environmental consequences associated with it, including potential effects to air quality.

The BLM met with and consulted 10 Tribes on oil and gas development which concluded on September 2010. The BLM finds that further consultation is appropriate under Executive Order 13175 and will send the draft supplement to the 25 Tribes that the BLM regularly contacts about issues in this area. The BLM will schedule face-to-face consultation meetings to discuss the supplement at the Tribes' request. All public comments submitted during the original Draft LMP/Draft EIS comment period regarding other plan revision issues and resources are still valid. The comments received in 2008 and the comments received on this supplement will create the complete set of comments that will be considered in developing the Final EIS and Proposed LMP.

The supplement is intended to be used in conjunction with the Draft EIS and Draft LMP that was published on December 14, 2007. Those documents can be found on the plan revision Web site: *http://ocs.fortlewis.edu/forestPlan.* Compact disk copies, and a limited number of printed copies, are available by contacting Elysia Retzlaff, (970) 385–1253; *emretzlaff@fs.fed.us.*

Please note that public comments and information submitted including names, street addresses, and e-mail addresses of persons who submit comments will be available for public review and disclosure at the above address during regular business hours, Monday through Friday, except holidays.

Before including your address, phone number, e-mail address, or other personal identifying information in your comment, you should be aware that your entire comment—including your personal identifying information—may be made publicly available at any time. While you can ask us in your comment to withhold from public review your personal identifying information, we cannot guarantee that we will be able to do so.

Authority: 40 CFR 1502.9(c)(4) and 43 CFR 1610.2(e).

Helen M. Hankins,

Colorado State Director.

Mark Stiles,

Forest Supervisor.

[FR Doc. 2011–21716 Filed 8–25–11; 8:45 am]

BILLING CODE 4310–JB–P

DEPARTMENT OF THE INTERIOR

Bureau of Land Management

[LLIDB00100 LF10000PP.HT0000 LXSS024D0000 4500023000]

Notice of Public Meeting: Resource Advisory Council to the Boise District, Bureau of Land Management, U.S. Department of the Interior

AGENCY: Bureau of Land Management, U.S. Department of the Interior.

ACTION: Notice of public meeting.

SUMMARY: In accordance with the Federal Land Policy and Management Act (FLPMA) and the Federal Advisory Committee Act of 1972 (FACA), the U.S. Department of the Interior, Bureau of Land Management (BLM) Boise District Resource Advisory Council (RAC), will hold a meeting as indicated below.

DATES: The meeting will be held September 21, 2011, at the Boise District Office, located at 3948 S. Development Avenue, Boise, Idaho, beginning at 9 a.m. and adjourning at 4:30 p.m. Members of the public are invited to attend. A public comment period will be held.

FOR FURTHER INFORMATION CONTACT: MJ Byrne, Public Affairs Officer and RAC Coordinator, BLM Boise District, 3948 Development Ave., Boise, ID 83705, Telephone (208) 384–3393.

SUPPLEMENTARY INFORMATION: The 15-member Council advises the Secretary of the Interior, through the BLM, on a variety of planning and management issues associated with public land management in southwestern Idaho. Items on the agenda include reports by the RAC's Resource Management Plan Subgroup on its collaborative actions following the RAC's Fire Symposium. Progress on development of the Environmental Assessment for the Paradigm Project will be provided by

the District's Fuels Program. Discussion on draft sections of the Four Fivers Field Office Resource Management Plan (RMP) will be held. Also included are updates on actions related to implementation of the Omnibus Public Lands Management Act of 2009, Subpart F—Owyhee Public Land Management, and an overview of the summer's fires in the Boise District. Each field manager will discuss progress being made on priority actions in their offices. Agenda items and location may change due to changing circumstances. The public may present written or oral comments to members of the Council. At each full RAC meeting, time is provided in the agenda for hearing public comments. Depending on the number of persons wishing to comment and time available, the time for individual oral comments may be limited. Individuals who plan to attend and need special assistance should contact the BLM Coordinator as provided above. Persons who use a telecommunications device for the deaf (TDD) may call the Federal Information Relay Service (FIRS) at 1–800–877–8339 to contact the above individual during normal business hours. The FIRS is available 24 hours a day, 7 days a week, to leave a message or question with the above individual. You will receive a reply during normal business hours.

Dated: August 19, 2011.

Arnold L. Pike,

Acting District Manager.

[FR Doc. 2011–21886 Filed 8–25–11; 8:45 am]

BILLING CODE 4310–GG–P

DEPARTMENT OF THE INTERIOR

National Park Service

[NPS–NCR–NACA–0811–8139; 3086–SYM]

Notice of Meeting, National Capital Memorial Advisory Commission

AGENCY: National Park Service, Interior.

ACTION: Notice of meeting.

SUMMARY: Notice is hereby given that the National Capital Memorial Advisory Commission (the Commission) will meet at the National Building Museum, Room 312, 401 F Street, NW., Washington, DC, on Wednesday, September 14, 2011, at 10 a.m., to consider matters pertaining to commemorative works in the District of Columbia and its environs.

DATES: Wednesday, September 14, 2011.

ADDRESSES: National Building Museum, Room 312, 401 F Street, NW., Washington, DC 20001.

FOR FURTHER INFORMATION CONTACT: Ms. Nancy Young, Secretary to the Commission, by telephone at (202) 619–7097, by e-mail at *nancy_young@nps.gov,* by telefax at (202) 619–7420, or by mail at the National Capital Memorial Advisory Commission, 1100 Ohio Drive, SW., Room 220, Washington, DC 20242.

SUPPLEMENTARY INFORMATION: The Commission was established by Public Law 99–652, the Commemorative Works Act (40 U.S.C. chapter 89 *et seq.*), to advise the Secretary of the Interior (the Secretary) and the Administrator, General Services Administration, (the Administrator) on policy and procedures for establishment of, and proposals to establish, commemorative works in the District of Columbia and its environs, as well as such other matters as it may deem appropriate concerning commemorative works.

The Commission examines each memorial proposal for conformance to the Commemorative Works Act, and makes recommendations to the Secretary and the Administrator and to Members and Committees of Congress. The Commission also serves as a source of information for persons seeking to establish memorials in Washington, DC, and its environs.

The members of the Commission are as follows:

Director, National Park Service,
Administrator, General Services Administration,
Chairman, National Capital Planning Commission,
Chairman, Commission of Fine Arts,
Mayor of the District of Columbia,
Architect of the Capitol,
Chairman, American Battle Monuments Commission,
Secretary of Defense.

The agenda for the meeting is as follows:

(1) Memorial to Dwight D. Eisenhower—Design consultation.

(2) Review of legislation proposed in the 112th Congress.

(a) H.R. 1972, a bill to authorize the Secretary of the Interior and Administrator of General Services to recommend the termination of authorities to establish commemorative works, to require the Secretary of the Interior to submit a plan to Congress to enhance amenities and activities on the National Mall, to authorize the National Capital Planning Commission to designate and modify the boundaries of Area I, and to direct the National Capital Planning Commission to recommend improvements on processes required by the Commemorative Works Act for the selection, design and subject matter of commemorative works.

(b) H.R. 2070, a bill to direct the Secretary of the Interior to install a plaque at the World War II Memorial commemorating President Franklin D. Roosevelt's prayer with the Nation on June 6, 1944.

(c) H.R. 2563, a bill to authorize a Wall of Remembrance as part of the Korean War Veterans Memorial and to allow certain private contributions to fund that Wall of Remembrance.

3. Other business.

The meeting will begin at 10 a.m. and is open to the public. Persons who wish to file a written statement or testify at the meeting or who want further information concerning the meeting may contact Ms. Nancy Young, Secretary to the Commission. Before including your address, phone number, e-mail address, or other personal identifying information in your comment, you should be aware that your entire comment—including your personal identifying information—may be made publicly available at any time. While you can ask us in your comment to withhold your personal identifying information from public review, we cannot guarantee that we will be able to do so.

Dated: August 9, 2011.

Stephen E. Whitesell,

Regional Director, National Capital Region.

[FR Doc. 2011–21952 Filed 8–25–11; 8:45 am]

BILLING CODE 4312–JK–P

DEPARTMENT OF THE INTERIOR

Office of Natural Resources Revenue

[Docket No. ONRR–2011–0019]

Agency Information Collection Activities: Proposed Collection, Comment Request

AGENCY: Office of Natural Resources Revenue, Interior.

ACTION: Notice of an extension of a currently approved information collection.

SUMMARY: To comply with the Paperwork Reduction Act of 1995 (PRA), the Office of Natural Resources Revenue (ONRR) is inviting comments on a collection of information that we will submit to the Office of Management and Budget (OMB) for review and approval. This information collection request (ICR) concerns the paperwork requirements in the regulations under the Chief Financial Officers Act of 1990 (CFO).

DATES: Submit written comments on or before *October 25, 2011.*

ADDRESSES: You may submit comments to ONRR by any of the following

methods. Please use ''ICR 1012–0001'' as an identifier in your comment.

• Electronically go to *http://www.regulations.gov.* In the entry titled ''Enter Keyword or ID,'' enter ONRR–2011–0019, and then click search. Follow the instructions to submit public comments. The ONRR will post all comments.

• Mail comments to Hyla Hurst, Regulatory Specialist, Office of Natural Resources Revenue, P.O. Box 25165, MS 61013C, Denver, Colorado 80225. Please reference ICR 1012–0001 in your comments.

• Hand-carry comments or use an overnight courier service. Our courier address is Building 85, Room A–614, Denver Federal Center, West 6th Ave. and Kipling St., Denver, Colorado 80225. Please reference ICR 1012–0001 in your comments.

FOR FURTHER INFORMATION CONTACT: Hyla Hurst, telephone (303) 231–3495, or e-mail *hyla.hurst@onrr.gov.* You may also contact Hyla Hurst to obtain copies, at no cost, of (1) the ICR, (2) any associated forms, and (3) the regulations that require the subject collection of information.

SUPPLEMENTARY INFORMATION:

Title: Accounts Receivable Confirmations.

OMB Control Number: 1012–0001.

Bureau Form Number: None.

Abstract: The Secretary of the U.S. Department of the Interior is responsible for mineral resource development on Federal and Indian lands and the Outer Continental Shelf (OCS) under the following laws: The Mineral Leasing Act of 1920 (30 U.S.C. 1923), the Indian Mineral Development of 1982 (Pub. L. 97–382—Dec. 22, 1982); and the Outer Continental Shelf Lands Act (43 U.S.C. 1353). The Secretary is responsible for managing the production of minerals from Federal and Indian lands and the OCS, collecting royalties and other mineral revenues from lessees who produce minerals, and distributing the funds collected in accordance with applicable laws. The Secretary has a trust responsibility to manage Indian lands and seek advice and information from Indian beneficiaries. The ONRR performs the minerals revenue management functions and assists the Secretary in carrying out the Department's trust responsibility for Indian lands. Public laws pertaining to mineral revenues are on our Web site at *http://www.onrr.gov/Laws_R_D/PublicLawsAMR.htm.*

When a company or an individual enters into a lease to explore, develop, produce, and dispose of minerals from Federal or Indian lands, that company or individual agrees to pay the lessor a share in an amount or value of production from the leased lands. The lessee is required to report various kinds of information to the lessor relative to the disposition of the leased minerals. Such information is generally available within the records of the lessee or others involved in developing, transporting, processing, purchasing, or selling of such minerals. The information ONRR collects includes data necessary to ensure that the royalties are accurately valued and appropriately paid.

Companies submit financial information monthly to ONRR on Form ONRR–2014, Report of Sales and Royalty Remittance (OMB Control Number 1012–0004) and on Form ONRR–4430, Solid Minerals Production and Royalty Report (OMB Control Number 1012–0010).

Every year, under CFO, the Department's Office of Inspector General, or its agent (agent), audits the Department's financial statements. The Department's goal is to receive an unqualified opinion. Accounts receivable confirmations are a common practice in the audit business. Due to continuously increasing scrutiny on financial audits, third-party confirmation on the validity of ONRR's financial records is necessary.

As part of CFO audit requirements, the agent selects royalty payors at random and provides the companies' names and addresses to ONRR. We mail the letters to the payors, instructing them to respond directly to the agent to confirm the accuracy and/or validity of selected royalty receivable items and amounts. In order to meet CFO requirements, the letters must be on ONRR letterhead and signed by the Deputy Director for Office of Natural Resources Revenue. Third-party confirmation responses are requested by a specified date, confirming that ONRR's accounts receivable records agree with royalty payor records, for the following items: Customer identification; royalty/invoice number; payor-assigned document number; date received; original amount reported; and remaining balance due to ONRR, as of a specified date. Verifying the amounts reported and the balances due requires time for research and analysis by payors.

Frequency: Annually.

Estimated Number and Description of Respondents: 48 Federal and Indian oil and gas and solid mineral royalty payors.

Estimated Annual Reporting and Recordkeeping ''Hour'' Burden: 12 hours. We estimate that each response will take 15 minutes for payors to complete.

Estimated Annual Reporting and Recordkeeping ''Non-hour Cost'' Burden: We have identified no ''non-hour cost'' burden associated with the collection of information.

Public Disclosure Statement: The PRA (44 U.S.C. 3501 *et seq.*) provides that an agency may not conduct or sponsor, and a person is not required to respond to, a collection of information unless it displays a currently valid OMB control number.

Comments: Before submitting an ICR to OMB, PRA Section 3506(c)(2)(A) requires each agency ''* * * to provide notice * * * and otherwise consult with members of the public and affected agencies concerning each proposed collection of information * * *.'' Agencies must specifically solicit comments to: (a) Evaluate whether the proposed collection of information is necessary for the agency to perform its duties, including whether the information is useful; (b) evaluate the accuracy of the agency's estimate of the burden of the proposed collection of information; (c) enhance the quality, usefulness, and clarity of the information to be collected; and (d) minimize the burden on the respondents, including the use of automated collection techniques or other forms of information technology.

The PRA also requires agencies to estimate the total annual reporting ''non-hour cost'' burden to respondents or recordkeepers resulting from the collection of information. If you have costs to generate, maintain, and disclose this information, you should comment and provide your total capital and startup cost components or annual operation, maintenance, and purchase of service components. You should describe the methods you use to estimate major cost factors, including system and technology acquisition, expected useful life of capital equipment, discount rate(s), and the period over which you incur costs. Capital and startup costs include, among other items, computers and software you purchase to prepare for collecting information; monitoring, sampling, and testing equipment; and record storage facilities. Generally, your estimates should not include equipment or services purchased: (i) Before October 1, 1995; (ii) to comply with requirements not associated with the information collection; (iii) for reasons other than to provide information or keep records for the Government; or (iv) as part of customary and usual business or private practices.

We will summarize written responses to this notice and address them in our ICR submission for OMB approval, including appropriate adjustments to the estimated burden. We will provide a copy of the ICR to you without charge upon request.

Public Comment Policy: Before including your address, phone number, e-mail address, or other personal identifying information in your comment, be advised that your entire comment—including your personal identifying information—may be made publicly available at any time. While you can ask us in your comment to withhold from public review your personal identifying information, we cannot guarantee that we will be able to do so.

ONRR Information Collection Clearance Officer: Armand Southall (303) 231–3221.

Dated: August 23, 2011.

Gregory J. Gould,

Director for Office of Natural Resources Revenue.

[FR Doc. 2011–21911 Filed 8–25–11; 8:45 am]

BILLING CODE 4310–MR–P

INTERNATIONAL TRADE COMMISSION

[Investigation No. 337–TA–736]

Certain Wind and Solar-Powered Light Posts and Street Lamps; Notice of Commission Determination Not To Review an Initial Determination Granting Complainants' Unopposed Motion To Terminate the Investigation Based on the Withdrawal of the Complaint; Termination of the Investigation

AGENCY: U.S. International Trade Commission.

ACTION: Notice.

SUMMARY: Notice is hereby given that the U.S. International Trade Commission has determined not to review an initial determination (''ID'') (Order No. 20) of the presiding administrative law judge (''ALJ'') granting complainants' motion to terminate the investigation based on the withdrawal of the complaint in the above-referenced investigation.

FOR FURTHER INFORMATION CONTACT: Jia Chen, Office of the General Counsel, U.S. International Trade Commission, 500 E Street, SW., Washington, DC 20436, telephone (202) 708–4737. Copies of non-confidential documents filed in connection with this investigation are or will be available for inspection during official business hours (8:45 a.m. to 5:15 p.m.) in the Office of the Secretary, U.S. International Trade Commission, 500 E Street, SW., Washington, DC 20436, telephone (202) 205–2000. General information concerning the Commission may also be obtained by accessing its Internet server at *http://www.usitc.gov.* The public record for this investigation may be viewed on the Commission's electronic docket (EDIS) at *http://edis.usitc.gov.* Hearing-impaired persons are advised that information on this matter can be obtained by contacting the Commission's TDD terminal on (202) 205–1810.

SUPPLEMENTARY INFORMATION: The Commission instituted this investigation on September 27, 2010, based on a complaint filed by Duggal Dimensions LLC; Duggal Energy Solutions, LLC; and Duggal Visual Solutions, Inc., collectively of New York, New York. 75 FR 59291 (Sept. 27, 2010). The complaint alleged violations of Section 337 of the Tariff Act of 1930, as amended, 19 U.S.C. 1337, in the importation into the United States, the sale for importation, and the sale within the United States after importation of certain wind and solar-powered light posts and street lamps by reason of infringement of certain claims of U.S. Patent No. D610,732. The complaint named Gus Power Inc. of Mississauga, Ontario, Canada; Efston Science, Inc. of Toronto, Ontario, Canada; King Luminaire, Inc. of Jefferson, Ohio; and The StressCrete Group of Burlington, Ontario as respondents.

On July 29, 2011, the ALJ issued an ID (Order No. 18) extending the target date of the investigation by approximately two months from January 27, 2012 to March 16, 2012 on the basis of the parties' delay to the procedural schedule.

On August 1, 2011, complainants filed an unopposed motion to terminate the investigation based on the withdrawal of the complaint, stating that the private parties have entered into a written settlement agreement (''Settlement Agreement''). Public and confidential versions of the Settlement Agreement were attached to the motion. The motion also stated that there are no other agreements, written or oral, express or implied, between the parties concerning the subjection matter of this investigation. On August 2, 2011, the ALJ issued the subject ID granting complainants' unopposed motion. The public version of the Settlement Agreement is attached to the ID. The ALJ found that complainants' motion complies with Commission Rule 210.21(a). In the ID, the ALJ also denied a previous motion by respondents to terminate the investigation (Motion Docket No. 736–018) and a motion in limine by complainants to exclude the testimony of respondents' experts (Motion Docket No. 736–716), because the motions are moot.

The Commission has determined not to review the subject ID. The Commission notes that as a result, the ID extending the target date of the investigation is moot.

The authority for the Commission's determination is contained in Section 337 of the Tariff Act of 1930, as amended (19 U.S.C. 1337), and in section 210.42 of the Commission's Rules of Practice and Procedure (19 CFR 210.42).

By order of the Commission.

Issued: August 23, 2011.

James R. Holbein,

Secretary to the Commission.

[FR Doc. 2011–21893 Filed 8–25–11; 8:45 am]

BILLING CODE 7020–02–P

DEPARTMENT OF JUSTICE

Office of Justice Programs

[OMB Number 1121–NEW]

Agency Information Collection Agencies: New Collection; Comments Requested, Census of Problem-Solving Courts 2011

ACTION: 60-Day notice of information collection under review.

The Department of Justice, Office of Justice Programs, Bureau of Justice Statistics, will be submitting the following information collection request for review and clearance in accordance with the Paperwork Reduction Act of 1995. The proposed information is published to obtain comments from the public and affected agencies. Comments are encouraged and will be accepted for ''sixty days'' until October 25, 2011. This process is conducted in accordance with 5 CFR 1320.10.

If you have additional comments, especially on the estimated public burden or associated response time, suggestions, or need a copy of the proposed information collection instrument with instructions or additional information, please contact: Ron Malega, 202–353–0487, Bureau of Justice Statistics, Office of Justice Programs, Department of Justice, 810 Seventh Street, NW., Washington DC 20531 or *Ronald.Malega@usdoj.gov.*

Written comments concerning this information collection should be sent to the Office of Information and Regulatory

Affairs, Office of Management and Budget, Attn: DOJ Desk Officer. The best way to ensure your comments are received is to e-mail them to *oira_submission@omb.eop.gov* or fax them to 202–395–7285. All comments should reference the 8 digit OMB number for the collection or the title of the collection. If you have questions concerning the collection, please call Ron Malega at 202–353–0487 or the DOJ Desk Officer at 202–395–3176.

Written comments and suggestions from the public and affected agencies concerning the proposed collection of information are encouraged. Your comments should address one or more of the following four points:

1. Evaluate whether the proposed collection of information is necessary for the proper performance of the functions of the agency, including whether the information will have practical utility;

2. Evaluate the accuracy of the agency's estimate of the burden of the proposed collection of information, including the validity of the methodology and assumptions used;

3. Enhance the quality, utility, and clarity of the information to be collected; and

4. Minimize the burden of collection of information on those who are to respond, including through the use of appropriate automated, electronic, mechanical, or other technological collection techniques or other forms of information technology, *e.g.,* permitting electronic submission of responses.

Overview of this information:

1. Type of information collection: New data collection, Census of Problem-Solving Courts (CPSC), 2011

2. The title of the form/collection: Census of Problem-Solving Courts or CPSC, 2011

3. The agency form number, if any, and the applicable component of the Department sponsoring the collection: The form labels are CPSC, Bureau of Justice Statistics, Office of Justice Programs, U.S. Department of Justice.

4. Affected Public Who Will be Asked or Required to Respond, as well as a Brief Abstract: Problem-solving courts at all levels of government. Abstract: The Bureau of Justice Statistics (BJS) proposes to implement a Census of Problem-Solving Courts (CPSC). Problem-solving courts target defendants who have ongoing social and/or psychological conditions that underlie their repeated contact with the criminal justice system. Most of the existing information about problem-solving courts (PSC) consists of court evaluations or outcome analyses. No prior census of these courts has been conducted to date despite the substantial proliferation of such courts during the past thirty years. Hence, the CPSC will allow BJS to provide national level information on problem-solving courts and case processing statistics and it will also create a sampling frame of PSCs thereby enabling BJS to conduct future sample-based research on PSCs. The CPSC is designed to provide BJS and other interested stakeholders with the first systematic empirical information on problem-solving courts. A goal of the census is to obtain information on problem-solving court operations, administration, and to generate accurate and reliable statistics on adult offenders who enter problem-solving court programs. The CPSC will collect information on the following categories:

a. Court Operations

i. Does the court operate within the judiciary, have a dedicated judicial officer, or have a dedicated docket/calendar?

ii. Provide the number of problem-solving courts by type (*e.g.,* mental health, drug, *etc.*)

iii. Determine PSCs level of government operations (*e.g.,* local, state, etc.), court jurisdiction (*e.g.,* limited, general, other) and intake of felony, misdemeanor, or status offenses

b. Funding: Types and prevalence of PSC funding (*e.g.,* local government budget, state budget, *etc.*)

c. Commonly Used Services:

i. Count the types and prevalence of offender/victim services (*e.g.,* anger management), counseling or treatment services (*e.g.,* outpatient mental health treatment), and general supportive services (*e.g.,* life skills)

d. Participant participation

i. Participant inclusionary and exclusionary factors,

ii. Participant point of entry (*e.g.* pre-plea, post-plea/pre-sentence, *etc.*)

e. Capacity and Enrollment

i. Total number of active participants PSC can manage at any one time

ii. Current number of active participants

f. Data Collection Practices:

i. Use of automated case management systems

ii. PSCs' ability to query information

g. PSC Participant information:

i. Percentage of program participants by age, gender, racial classification,

ii. Housing status

iii. Employment status

h. PSC information for calendar year 2011 only:

i. Number or people referred and admitted to PSCs,

ii. PSCs average participant attendance to: scheduled judicial, community supervision meetings, treatment sessions, and drug tests

iii. Number or participants exiting program,

iv. Number of participants by gender, race, and age.

Additionally, the information collected through this census will support development of a sampling framework to examine case processing information and case dispositions of adults in problem-solving courts. Information will be collected for the 2011 calendar year.

5. An Estimate of the Total Number of Respondents and the Amount of Time Estimated for an Average Respondent to Respond: Estimates suggest 3,800 respondents will take part in the Census of Problem-Solving Courts 2011. The average (mean) burden for each completed survey is almost 1 hour per respondent. The estimated range of burden for respondents is between 40 minutes to 2 hours for completion. The following factors were considered when creating the burden estimate: the total number of drug courts in the field, the total number of mental health courts, the ability of problem-solving courts (by type) to access data, and the type of data capabilities generally found in the field. Using these criteria, respondents were categorized into three groups depending upon whether they had the capacity to complete only part I or both parts (I&II) of the survey. Group A respondents will have the least access to data and complete only part one of the survey. Approximately 2,300 respondents will be in this group. It is estimated that respondents in group A will take 40 minutes to complete the survey. Group (B) respondents will complete part one of the survey and have access to only limited information necessary for part two of the survey. Approximately 1,200 respondents will be in this group. This second group of respondents will take about 1 hour and 15 minutes to complete a survey. The third group (C) of respondents will complete parts one and two of the survey; they will have the greatest access to the information required for part two of the survey. Approximately 300 respondents will be in group C. It is estimated it will take this group about 2 hours to complete the survey.

6. An Estimate of the Total Public Burden (in hours) Associated with the collection: The estimated public burden associated with this collection is 3,633 hours. Respondents were categorized into three groups depending upon whether they had the capacity to complete only part I or both parts (I&II) of the survey. Approximately 2,300 respondents will fall into the first group

(A) of respondents, completing only part one of the survey. It is estimated that respondents in this group will take 40 minutes to complete a survey for a total of 1,533 hours. The second group (B) of respondents will complete part one of the survey and have access to only limited amount of information necessary for part two of the survey. The approximately 1,200 respondents in this second group of respondents will take about 1 hour and 15 minutes to complete a survey for a total of 1,500 hours. The third group (C) of respondents will complete parts one and two of the survey; they will have the greatest access to the information required for part two of the survey. It is estimated it will take the estimated 300 respondents in this group about 2 hours each to complete a survey for a total of 600 hours. When the burden hours for each group of respondents are added up the CPSC 2011 project sums to 3,633 hours (1,533 + 1,500 + 600 = 3,633).

If additional information is required contact: Jerri Murray, Department Clearance Officer, United States Department of Justice, Justice Management Division, Policy and Planning Staff, Two Constitution Square, 145 N Street, NE., Suite 2E–502, Washington, DC 20530.

Jerri Murray,

Department Clearance Officer, PRA, U.S. Department of Justice.

[FR Doc. 2011–21888 Filed 8–25–11; 8:45 am]

BILLING CODE 4410–18–P

DEPARTMENT OF LABOR

Office of the Secretary

Agency Information Collection Activities; Submission for OMB Review; Comment Request; Family and Medical Leave Act Employer and Employee Surveys, 2011

ACTION: Notice.

SUMMARY: The Department of Labor (DOL) is submitting the proposed Wage and Hour Division (WHD) sponsored information collection request (ICR) titled, ''Family and Medical Leave Act Employer and Employee Surveys, 2011,'' to the Office of Management and Budget (OMB) for review and approval for use in accordance with the Paperwork Reduction Act (PRA) of 1995 (44 U.S.C. 3501 *et seq.*).

DATES: Submit comments on or before September 26, 2011.

ADDRESSES: A copy of this ICR with applicable supporting documentation; including a description of the likely respondents, proposed frequency of response, and estimated total burden may be obtained from the RegInfo.gov Web site, *http://www.reginfo.gov/public/do/PRAMain,* on the day following publication of this notice or by contacting Michel Smyth by telephone at 202–693–4129 (this is not a toll-free number) or sending an e-mail to *DOL_PRA_PUBLIC@dol.gov.*

Submit comments about this request to the Office of Information and Regulatory Affairs, Attn: OMB Desk Officer for the Department of Labor, Wage and Hour Division (WHD), Office of Management and Budget, Room 10235, Washington, DC 20503, Telephone: 202–395–6929/Fax: 202–395–6881 (these are not toll-free numbers), e-mail: *OIRA_submission@omb.eop.gov.*

FOR FURTHER INFORMATION CONTACT: Michel Smyth by telephone at 202–693–4129 (this is not a toll-free number) or by e-mail at *DOL_PRA_PUBLIC@dol.gov.*

SUPPLEMENTARY INFORMATION: The Wage and Hour Division (WHD) administers the Family and Medical Leave Act (FMLA), 29 U.S.C. 2601 *et seq.,* 29 CFR part 825. In 1996 and 2000, the Federal government funded the collection of nationally representative data on the FMLA from employers and employees. Given changes in economic conditions and the FMLA since the last employer and employee surveys, the WHD proposes to conduct an employer survey and an employee survey to obtain current representative data for FMLA leave usage in light of 18 years of administering the law and in light of changes to FMLA leave brought on by amendments to the FMLA. The survey data will provide an update to DOL's understanding of leave-taking behavior and employer/employee experiences with the FMLA.

This information collection is subject to the PRA. A Federal agency generally cannot conduct or sponsor a collection of information, and the public is generally not required to respond to an information collection, unless it is approved by the OMB under the PRA and displays a currently valid OMB Control Number. In addition, notwithstanding any other provisions of law, no person shall generally be subject to penalty for failing to comply with a collection of information if the collection of information does not display a valid OMB Control Number. *See* 5 CFR 1320.5(a) and 1320.6. This request for a new OMB Control Number is being submitted under ICR Reference Number 201105–1235–001. For additional information, see the related notice published in the **Federal Register** on April 1, 2011 (76 FR 18254).

Interested parties are encouraged to send comments to the OMB, Office of Information and Regulatory Affairs at the address shown in the **ADDRESSES** section within 30 days of publication of this notice in the **Federal Register**. In order to help ensure appropriate consideration, comments should identify ICR reference number 201105–1235–001. The OMB is particularly interested in comments that:

- Evaluate whether the proposed collection of information is necessary for the proper performance of the functions of the agency, including whether the information will have practical utility;
- Evaluate the accuracy of the agency's estimate of the burden of the proposed collection of information, including the validity of the methodology and assumptions used;
- Enhance the quality, utility, and clarity of the information to be collected; and
- Minimize the burden of the collection of information on those who are to respond, including through the use of appropriate automated, electronic, mechanical, or other technological collection techniques or other forms of information technology, *e.g.,* permitting electronic submission of responses.

Agency: Wage and Hour Division.

Title of Collection: Family and Medical Leave Act Employer and Employee Surveys, 2011.

OMB ICR Reference Number: 201105–1235–001.

Affected Public: Individuals or Households; Private Sector—Businesses, Farms, and Not-for-profit entities.

Total Estimated Number of Respondents: 21,072.

Total Estimated Number of Responses: 21,072.

Total Estimated Annual Burden Hours: 138,472.

Total Estimated Annual Other Costs Burden: $0.

Dated: August 19, 2011.

Michel Smyth,

Departmental Clearance Officer.

[FR Doc. 2011–21849 Filed 8–25–11; 8:45 am]

BILLING CODE 4510–27–P

DEPARTMENT OF LABOR

Office of the Secretary

Agency Information Collection Activities; Submission for OMB Review; Comment Request; Unemployment Insurance State Quality Service Plan

ACTION: Notice.

SUMMARY: The Department of Labor (DOL) is submitting the Employment and Training Administration (ETA) sponsored information collection request (ICR) titled, ''Unemployment Insurance State Quality Service Plan,'' to the Office of Management and Budget (OMB) for review and approval for continued use in accordance with the Paperwork Reduction Act (PRA) of 1995 (44 U.S.C. 3501 *et seq.*).

DATES: Submit comments on or before September 26, 2011.

ADDRESSES: A copy of this ICR with applicable supporting documentation; including a description of the likely respondents, proposed frequency of response, and estimated total burden may be obtained from the RegInfo.gov Web site, *http://www.reginfo.gov/public/do/PRAMain,* on the day following publication of this notice or by contacting Michel Smyth by telephone at 202–693–4129 (this is not a toll-free number) or sending an e-mail to *DOL_PRA_PUBLIC@dol.gov.*

Submit comments about this request to the Office of Information and Regulatory Affairs, Attn: OMB Desk Officer for the U.S. Department of Labor, Employment and Training Administration (ETA), Office of Management and Budget, Room 10235, Washington, DC 20503, Telephone: 202–395–6929/Fax: 202–395–6881 (these are not toll-free numbers), e-mail: *OIRA_submission@omb.eop.gov.*

FOR FURTHER INFORMATION CONTACT: Michel Smyth by telephone at 202–693–4129 (this is not a toll-free number) or by e-mail at *DOL_PRA_PUBLIC@dol.gov.*

SUPPLEMENTARY INFORMATION: The State Quality Service Plan is one of several implementing documents for UI PERFORMS that allows for an exchange of information between the Federal and State partners to enhance the ability of the program to reflect the joint commitment to continuous improvement and client centered services.

This information collection is subject to the PRA. A Federal agency generally cannot conduct or sponsor a collection of information, and the public is generally not required to respond to an information collection, unless it is approved by the OMB under the PRA and displays a currently valid OMB Control Number. In addition, notwithstanding any other provisions of law, no person shall generally be subject to penalty for failing to comply with a collection of information if the collection of information does not display a valid OMB Control Number. *See* 5 CFR 1320.5(a) and 1320.6. The DOL obtains OMB approval for this information collection under OMB Control Number 1205–0132. The current OMB approval is scheduled to expire on August 31, 2011; however, it should be noted that information collection requirements submitted to the OMB receive a month-to-month extension while they undergo review. For additional information, see the related notice published in the **Federal Register** on May 5, 2011 (76 FR 25710).

Interested parties are encouraged to send comments to the OMB, Office of Information and Regulatory Affairs at the address shown in the **ADDRESSES** section within 30 days of publication of this notice in the **Federal Register**. In order to help ensure appropriate consideration, comments should reference OMB Control Number 1205–0132. The OMB is particularly interested in comments that:

- Evaluate whether the proposed collection of information is necessary for the proper performance of the functions of the agency, including whether the information will have practical utility;
- Evaluate the accuracy of the agency's estimate of the burden of the proposed collection of information, including the validity of the methodology and assumptions used;
- Enhance the quality, utility, and clarity of the information to be collected; and
- Minimize the burden of the collection of information on those who are to respond, including through the use of appropriate automated, electronic, mechanical, or other technological collection techniques or other forms of information technology, *e.g.,* permitting electronic submission of responses.

Agency: Employment and Training Administration (ETA).

Title of Collection: Unemployment Insurance State Quality Service Plan.

OMB Control Number: 1205–0132.

Affected Public: State, Local, and Tribal Governments.

Total Estimated Number of Respondents: 53.

Total Estimated Number of Responses: 848.

Total Estimated Annual Burden Hours: 2,576.

Total Estimated Annual Other Costs Burden: $0.

Dated: August 22, 2011.

Michel Smyth,

Departmental Clearance Officer.

[FR Doc. 2011–21850 Filed 8–25–11; 8:45 am]

BILLING CODE 4510–FW–P

LEGAL SERVICES CORPORATION

Sunshine Act Meeting; Cancellation—Board of Directors

TIME AND DATE: The August 25, 2011 meeting of the Legal Services Corporation's Board of Directors previously noticed in Volume 76, Number 162 of the **Federal Register**, at pages 52352–52353, has been *cancelled.*

CONTACT PERSON FOR INFORMATION: Katherine Ward, Executive Assistant to the Vice President & General Counsel, at (202) 295–1500. Questions may be sent by electronic mail to *FR_NOTICE_QUESTIONS@lsc.gov.*

Dated: August 23, 2011.

Victor M. Fortuno,

Vice President & General Counsel.

[FR Doc. 2011–21962 Filed 8–24–11; 11:15 am]

BILLING CODE 7050–01–P

NUCLEAR REGULATORY COMMISSION

[NRC–2008–0441; Docket Nos. 52–027–COL and 52–028–COL]

South Carolina Public Service Authority (Also Referred to as Santee Cooper); Combined Licenses for Virgil C. Summer Nuclear Station, Units 2 and 3

AGENCY: Nuclear Regulatory Commission.

ACTION: Notice of hearing.

SUMMARY: The U.S. Nuclear Regulatory Commission (NRC or the Commission) will convene an evidentiary session to receive testimony and exhibits in the uncontested portion of this proceeding regarding the application of South Carolina Electric & Gas Company for two combined licenses (COLs) seeking approval to construct and operate new nuclear power generation facilities at the Virgil C. Summer Nuclear Station (VCSNS). This mandatory hearing will concern safety and environmental matters relating to the proposed issuance of the requested COLs.

DATES: The hearing will be held on October 12, 2011, from 9 a.m. (Eastern

Daylight Time). For a schedule for submitting prefiled documents and deadlines affecting Interested Government Participants, see the **SUPPLEMENTARY INFORMATION** section of this document.

FOR FURTHER INFORMATION CONTACT: Rochelle C. Bavol, Office of the Secretary, U.S. Nuclear Regulatory Commission, Washington, DC 20555–0001, telephone: 301–415–1651; e-mail: *Rochelle.Bavol@nrc.gov.*

SUPPLEMENTARY INFORMATION:

Background

The Commission hereby gives notice that, pursuant to Section 189a of the Atomic Energy Act, it will convene an evidentiary session to receive testimony and exhibits in the uncontested portion of this proceeding regarding the March 27, 2008, application of South Carolina Electric & Gas Company, acting for itself and as agent for the South Carolina Public Service Authority (also referred to as Santee Cooper), for two Title 10 of the Code of Federal Regulations (10 CFR) part 52 combined licenses (COLs), seeking approval to construct and operate new nuclear power generation facilities at the Virgil C. Summer Nuclear Station (VCSNS), to be located in Fairfield County, South Carolina. This mandatory hearing will concern safety and environmental matters relating to the proposed issuance of the requested COLs, as more fully described below. Participants in the hearing are not to address any contested issues in their written filings or oral presentations.

Matters To Be Considered

The matter at issue in this proceeding is whether the review of the application by the Commission's staff has been adequate to support the findings found in 10 CFR 52.97 and 10 CFR 51.107 for each of the COLs to be issued. Those findings that must be made for each COL are as follows:

Issues Pursuant to the Atomic Energy Act of 1954, as Amended

(1) Whether the applicable standards and requirements of the Act and the Commission's regulations have been met; (2) whether any required notifications to other agencies or bodies have been duly made; (3) whether there is reasonable assurance that the facility will be constructed and will operate in conformity with the license, the provisions of the Act, and the Commission's regulations; (4) whether the applicant is technically and financially qualified to engage in the activities authorized; and (5) whether issuance of the license will not be inimical to the common defense and security or the health and safety of the public.

Issues Pursuant to the National Environmental Policy Act (NEPA) of 1969, as Amended

(1) Determine whether the requirements of Sections 102(2)(A), (C), and (E) of NEPA and the applicable regulations in 10 CFR Part 51 have been met; (2) independently consider the final balance among conflicting factors contained in the record of the proceeding with a view to determining the appropriate action to be taken; (3) determine, after weighing the environmental, economic, technical, and other benefits against environmental and other costs, and considering reasonable alternatives, whether the combined license should be issued, denied, or appropriately conditioned to protect environmental values; and (4) determine whether the NEPA review conducted by the NRC staff has been adequate.

Evidentiary Uncontested Hearing

The Commission will conduct this hearing beginning at 9:00 a.m., Eastern Daylight Time (EDT) on October 12, 2011, at the Commission's headquarters in Rockville, Maryland. The hearing on these issues will continue on subsequent days, if necessary.

Presiding Officer

The Commission is the presiding officer for this proceeding.

Schedule for Submittal of Pre-Filed Documents

No later than September 27, 2011, unless the Commission directs otherwise, the staff and the applicant shall submit a list of its anticipated witnesses for the hearing.

No later than September 27, 2011, unless the Commission directs otherwise, the applicant shall submit its pre-filed written testimony. The staff previously submitted its testimony on August 19, 2011.

The Commission may issue written questions to the applicant or the staff before the hearing. If such questions are issued, an order containing such questions will be issued no later than September 14, 2011. Responses to such questions are due September 27, 2011, unless the Commission directs otherwise.

Interested Government Participants

No later than September 12, 2011, any interested State, local government body, or affected, Federally-recognized Indian Tribe may file with the Commission a statement of any issues or questions that the State, local government body, or Indian Tribe wishes the Commission to give particular attention to as part of the uncontested hearing process. Such statement may be accompanied by any supporting documentation that the State, local government body, or Indian Tribe sees fit to provide. Any statements and supporting documentation (if any) received by the Commission using the agency's E-filing system [1] by the deadline indicated above will be made part of the record of the proceeding. The Commission will use such statements and documents as appropriate to inform its pre-hearing questions to the Staff and applicant, its inquiries at the oral hearing and its decision following the hearing. The Commission may also request, prior to September 28, 2011, that one or more particular States, local government bodies, or Indian Tribes send one representative each to the evidentiary hearing to answer Commission questions and/or make a statement for the purpose of assisting the Commission's exploration of one or more of the issues raised by the State, local government body, or Indian Tribe in the pre-hearing filings described above. The decision of whether to request the presence of a representative of a State, local government body, or Indian Tribe at the evidentiary hearing to make a statement and/or answer Commission questions is solely at the Commission's discretion. The Commission's request will specify the issue or issues that the representative should be prepared to address.

States, local governments, or Indian Tribes should be aware that this evidentiary hearing is separate and distinct from the NRC's contested hearing process. Issues within the scope of contentions that have been admitted in a contested proceeding for a COL application are outside the scope of the uncontested proceeding for that COL application. In addition, while States, local governments, or Indian Tribes participating as described above may take any position they wish, or no position at all, with respect to issues

[1] The process for accessing and using the agency's E-filing system is described in the October 10, 2008, notice of hearing that was issued by the Commission for this proceeding. See South Carolina Electric & Gas Company, Acting for Itself and as Agent for the South Carolina Public Service Authority (Also Referred to as Santee Cooper) Application for the Virgil C. Summer Nuclear Station Units 2 and 3; Notice of Order, Hearing, and Opportunity To Petition for Leave To Intervene [73 FR 60362]. Participants who are unable to use the EIE, or who will have difficulty complying with EIE requirements in the time frame provided for submission of written statements, may provide their statements by electronic mail to *hearingdocket@nrc.gov.*

regarding the COL application or the NRC Staff's associated environmental review that do fall within the scope of the uncontested proceeding (i.e., issues that are not within the scope of admitted contentions), they should be aware that many of the procedures and rights applicable to the NRC's contested hearing process due to the inherently adversarial nature of such proceedings are not available with respect to this uncontested hearing. Participation in the NRC's contested hearing process is governed by 10 CFR 2.309 (for persons or entities, including States, local governments, or Indian Tribes, seeking to file contentions of their own) and 10 CFR 2.315(c) (for interested States, local governments, and Indian Tribes seeking to participate with respect to contentions filed by others). Participation in this uncontested hearing does not affect a State's, local government's, or Indian Tribe's right to participate in the separate contested hearing process.

The Commission recognizes that a request to participate under 10 CFR 2.315(c) in proceedings regarding this COL application was previously dismissed on mootness grounds by an NRC Atomic Safety and Licensing Board. Such dismissals apply solely to the contested portion of the proceeding, and do not affect any rights to participate in this uncontested portion of the proceeding.

Dated at Rockville, Maryland, this 22nd day of August 2011.

For the Nuclear Regulatory Commission.

Annette L. Vietti-Cook,

Secretary of the Commission.

[FR Doc. 2011–21896 Filed 8–25–11; 8:45 am]

BILLING CODE 7590–01–P

NUCLEAR REGULATORY COMMISSION

[Docket No. 70–7001; Certificate No. GDP–1; EA–11–056; NRC–2011–056]

In the Matter of United States Enrichment Corporation; Paducah Gaseous Enrichment Plant; Confirmatory Order (Effective Immediately)

I

The United States Enrichment Corporation (USEC), a subsidiary of USEC Inc., is the holder of the United States Nuclear Regulatory Commission (NRC or the Commission) Certificates of Compliance (COC) No. GDP–1 issued by the NRC pursuant to Title 10 of the Code of Federal Regulations (10 CFR) Part 76 on November 26, 1996, and renewed on December 22, 2008. The COC is set to expire on December 31, 2013. The certificate authorizes USEC to operate the Paducah Gaseous Diffusion Plant (Paducah), located near Paducah, Kentucky. The certificate also authorizes USEC to receive, and other NRC licensees to transfer to USEC, byproduct material, source material, or special nuclear material to the extent permitted under the COC.

This Confirmatory Order is the result of an agreement reached during an alternative dispute resolution (ADR) mediation session conducted on July 22, 2011.

II

On March 17, 2010, an incident occurred at the Paducah facility involving the spread of contamination while operators were involved in the routine activity of swapping cylinders from the enrichment cascade in the 337A feed building. USEC-Paducah management promptly initiated an investigation to review the incident.

On July 14, 2010, the NRC's Office of Investigations (OI) initiated an investigation (OI Case No. 2–2010–037) regarding activities at the Paducah facility. The purpose of the investigation was to determine whether an operator willfully violated applicable radiation protection procedures.

Based on the evidence developed during the NRC investigation, the NRC staff identified one apparent violation, as documented in the NRC's letter to USEC-Paducah dated May 18, 2011. The apparent violation involved the failure to adhere to the requirements of USEC-Paducah Procedure UE2–HP–RP1030, Rev. 4, ''Conduct of Radiological Operations,'' which requires that personnel shall properly perform a whole body frisk when exiting from areas controlled for removable contamination, unless otherwise authorized by Health Physics. USEC-Paducah is required by Certificate GDP–1 to implement the procedure in accordance with Technical Safety Requirements 3.9.1, ''Procedures Scope,'' which requires, in part, that written procedures shall be implemented to cover activities listed in Appendix A to Safety Analysis Report (SAR) Section 6.11. Appendix A to SAR 6.11, ''Procedures,'' requires, in part, the licensee to implement procedures to cover radiation protection activities. In this case, an operator failed to properly use a radiation monitor before exiting the contamination control zone (CCZ), and spread contamination of high activity level to the Operations Monitoring Room, an area adjacent to the CCZ and inside the 337A feed building.

The NRC's letter of May 18, 2011, preliminarily concluded that the cause of the violation was due, in part, to the deliberate misconduct of an operator at the Paducah facility.

III

On July 22, 2011, the NRC and USEC met in an ADR session mediated by a professional mediator, which was arranged through Cornell University's Institute on Conflict Resolution. ADR is a process in which a neutral mediator with no decision-making authority assists the parties in reaching an agreement or resolving any differences regarding their dispute. This confirmatory order is issued pursuant to the agreement reached during the ADR process. The elements of the agreement consist of the following:

1. USEC-Paducah agreed that the issue described in Section II above represents a violation of Certificate GDP–1, Technical Safety Requirements 3.9.1, and USEC-Paducah Procedure UE2–HP–RP1030, in that an employee by-passed a radiation monitor and exited the CCZ. USEC-Paducah also agreed with the NRC's conclusion that the violation was due, in part, to the deliberate misconduct of the employee at the Paducah facility.

2. At the ADR session, USEC-Paducah acknowledged the seriousness associated with the procedural violation and the deliberate misconduct of its employee. The incident caused the spread of contamination and constituted a serious violation of its procedures, standards, and expectations. The potential consequences of the incident could have been more significant, because under different circumstances, contamination could have been spread to other areas of the facility, and off-site. The incident prompted USEC to conduct a thorough investigation of the event, a determination of the extent of condition, and a root cause evaluation. USEC's investigation also included a review of the circumstances that took place during the routine operational activities of swapping cylinders to the enrichment cascade that resulted in the existence of contaminated material. In addition, USEC investigated the operational and procedural aspects that established the conditions that led to the spread of contamination in the autoclave facility.

3. In response to the violation described above, USEC-Paducah implemented numerous corrective actions and enhancements to address the incident and to prevent recurrence, including but not limited to:

a. A prompt investigation into the incident, and the initiation of its

disciplinary process to address the conduct of the employee involved;

b. Decontamination and restoration of the normal CCZ boundaries in the C–337A building;

c. The placement of an entry in the Daily Operating Instructions requiring Operators to wear full anti-contamination clothing while changing cylinders in the C–337A building, pending the results of the Company's investigation;

d. Issuance of a ''Required Reading'' to provide uranium hexafluoride handling personnel initial information about the contamination event;

e. Issuance of a long-term order requiring Operators to check for abnormal pressure spikes before disconnecting a cylinder (to prevent a similar release of contamination);

f. The conduct of briefings about the contamination event with all HP Technicians.

g. The conduct of a Stand Down with all Operations crews to discuss the contamination event;

h. The operators involved in the incident were required to take Radworker Refresher training;

i. Issuance of a second ''Required Reading'' to provide an update to the immediate Required Reading about: (a) the contamination event; and (b) the reasons for the issuance of the long-term order described above;

j. Issuance of a second long-term order requiring Area Control Room Operators to verify the feed valve on the empty cylinder is closed before opening the feed valve on the full cylinder when swapping feed cylinders that have emptied;

k. Clarification of management's expectation that supervisors document in the Company's Corrective Action Program when an unexpected pressure spike occurs;

l. The conduct of briefings of all plant personnel by management in each Organization about this contamination event, including reinforcement of the potential consequences of failing to comply with radiological protection requirements;

m. USEC revised procedure CP4–CO–CN2045a to require Area Control Room operators to ensure the feed valve on the empty cylinder is closed before opening the feed valve on the full cylinder. The revision also included a note explaining the significance of the valve sequencing from a potential contamination perspective. USEC also revised CP4–CO–CN2045a to require the vaporizer operators to check for abnormal pressure spikes before disconnecting a cylinder;

n. The General Manager and Plant Manager conducted ''all hands'' meetings to communicate a zero tolerance for willfully violating or bypassing safety requirements;

o. USEC reviewed and evaluated all reported cylinder change pressure spikes for the nine-month period ending December 31, 2010, focusing on operating parameters of the autoclaves involved, including a discussion of valving operations supporting the cylinder change. The review found one similar pressure spike, but the cause was a plugged feed header in C–333, not a valving error. Personnel used enhanced HP monitoring when this cylinder was disconnected and no release of radioactive particulates or contamination occurred;

p. USEC completed an effectiveness review of the above corrective actions on February 3, 2011, which concluded that the corrective actions were effective.

4. In addition to the actions completed by USEC as discussed above, USEC agreed to additional corrective actions and enhancements, as fully delineated in Section V of this Confirmatory Order.

5. At the ADR session, the NRC and USEC agreed that the above elements will be incorporated into a Confirmatory Order. The resulting Confirmatory Order will be considered by the NRC for any assessment of USEC-Paducah, as appropriate.

6. USEC-Paducah agrees to waive its hearing rights for the issues documented in the Confirmatory Order.

7. In consideration of the corrective actions and commitments delineated in Section III.3 and Section V, the NRC agrees to not issue a Notice of Violation, and refrain from proposing a civil penalty for all matters discussed in the NRC's letter to USEC of May 18, 2011 (EA–11–056). This completes the Agency's enforcement action with respect to USEC-Paducah regarding all matters discussed in the NRC's letter to USEC of May 18, 2011.

8. This agreement is binding upon successors and assigns of USEC.

On August 11, 2011, USEC consented to issuance of this Order with the commitments, as described in Section V below. USEC further agreed that this Order is to be effective upon issuance and that it has waived its right to a hearing.

IV

Since USEC has completed the actions as delineated in Section III.3, and agreed to take the actions as set forth in Section V, the NRC has concluded that its concerns can be resolved through issuance of this Order.

I find that USEC's commitments as set forth in Section V are acceptable and necessary and conclude that with these commitments the public health and safety are reasonably assured. In view of the foregoing, I have determined that public health and safety require that USEC's commitments be confirmed by this Order. Based on the above and USEC's consent, this Order is immediately effective upon issuance.

V

Accordingly, pursuant to Sections 104b, 161b, 161i, 161o, 182 and 186 of the Atomic Energy Act of 1954, as amended, and the Commission's regulations in 10 CFR 2.202 and 10 CFR Part 76, *it is hereby ordered, effective immediately, that Certificate No. GDP–1 be modified as follows:*

a. USEC will use multiple site-wide communication tools (e.g., ''All Hands'' meetings and written communications) to emphasize safety culture to employees and contractors at Paducah and the importance of using human error prevention tools, the need to comply with job rules, regulations, and procedures, and the potential consequences when compliance does not occur. The first of these communications will occur within 60 days of the issuance of the Confirmatory Order.

b. Within four months of the issuance of the Confirmatory Order, USEC will develop and begin implementation of a required training program at Paducah that describes the requirements of 10 CFR 76.9, Completeness and Accuracy of Information, and 10 CFR 76.10, Deliberate Misconduct, to all employees. This training is to include the potential consequences individuals may experience for willful violations of 10 CFR 76.10.

c. Within six months of the issuance of the Confirmatory Order, USEC will enhance new employee orientation and General Employee Training at Paducah to ensure that personnel clearly understand that deliberate acts of non-compliance with regulations or procedures will not be tolerated and could result in a significant disciplinary action up to and including termination.

d. USEC will expand the independent, Safety Conscious Work Environment assessment, required by Confirmatory Order EA–06–140, Section V.III, dated August 13, 2009, to include an assessment of the safety culture components of decision making and work practices. Particular attention shall be focused on the effectiveness of corrective actions associated with the

March 17, 2010 incident in the areas of: (1) training; (2) the use of error prevention methods; and (3) procedural adherence. The effectiveness review shall, at a minimum, include direct observation of facility staff, and shall include the benchmarking of other nuclear industry facilities in the area of error prevention.

e. Within three months of USEC's receipt of the report of the Safety Conscious Work Environment assessment, USEC shall brief the NRC on the results of the assessment and any planned corrective actions arising out of the assessment. During this briefing, USEC shall also provide the NRC with the results of its efforts to identify appropriate metrics to measure site safety culture.

The Regional Administrator, NRC Region II, may relax or rescind, in writing, any of the above conditions upon a showing by USEC of good cause.

VI

Any person adversely affected by this Confirmatory Order, other than USEC, may request a hearing within 20 days of its publication in the **Federal Register**. Where good cause is shown, consideration will be given to extending the time to request a hearing. A request for extension of time must be made in writing to the Director, Office of Enforcement, U.S. Nuclear Regulatory Commission, Washington, DC 20555, and include a statement of good cause for the extension.

All documents filed in NRC adjudicatory proceedings, including a request for hearing, a petition for leave to intervene, any motion or other document filed in the proceeding prior to the submission of a request for hearing or petition to intervene, and documents filed by interested governmental entities participating under 10 CFR 2.315(c), must be filed in accordance with the NRC E-Filing rule (72 FR 49139, August 28, 2007). The E-Filing process requires participants to submit and serve all adjudicatory documents over the Internet, or in some cases to mail copies on electronic storage media. Participants may not submit paper copies of their filings unless they seek an exemption in accordance with the procedures described below.

To comply with the procedural requirements of E-Filing, at least ten (10) days prior to the filing deadline, the participant should contact the Office of the Secretary by e-mail at *hearing.docket@nrc.gov*, or by telephone at 301–415–1677, to request (1) a digital ID certificate, which allows the participant (or its counsel or representative) to digitally sign documents and access the E-Submittal server for any proceeding in which it is participating; and (2) advise the Secretary that the participant will be submitting a request or petition for hearing (even in instances in which the participant, or its counsel or representative, already holds an NRC-issued digital ID certificate). Based upon this information, the Secretary will establish an electronic docket for the hearing in this proceeding if the Secretary has not already established an electronic docket.

Information about applying for a digital ID certificate is available on NRC's public Web site at *http://www.nrc.gov/site-help/e-submittals/apply-certificates.html.* System requirements for accessing the E-Submittal server are detailed in NRC's ''Guidance for Electronic Submission,'' which is available on the agency's public Web site at *http://www.nrc.gov/site-help/e-submittals.html*. Participants may attempt to use other software not listed on the Web site, but should note that the NRC's E-Filing system does not support unlisted software, and the NRC Meta System Help Desk will not be able to offer assistance in using unlisted software.

If a participant is electronically submitting a document to the NRC in accordance with the E-Filing rule, the participant must file the document using the NRC's online, Web-based submission form. In order to serve documents through the Electronic Information Exchange (EIE), users will be required to install a Web browser plug-in from the NRC Web site. Further information on the Web-based submission form, including the installation of the Web browser plug-in, is available on the NRC's public Web site at *http://www.nrc.gov/site-help/e-submittals.html.*

Once a participant has obtained a digital ID certificate and a docket has been created, the participant can then submit a request for hearing or petition for leave to intervene. Submissions should be in Portable Document Format (PDF) in accordance with NRC guidance available on the NRC public Web site at *http://www.nrc.gov/site-help/e-submittals.html.* A filing is considered complete at the time the documents are submitted through the NRC's E-Filing system. To be timely, an electronic filing must be submitted to the E-Filing system no later than 11:59 p.m. Eastern Time on the due date. Upon receipt of a transmission, the E-Filing system time-stamps the document and sends the submitter an e-mail notice confirming receipt of the document. The E-Filing system also distributes an e-mail notice that provides access to the document to the NRC Office of the General Counsel and any others who have advised the Office of the Secretary that they wish to participate in the proceeding, so that the filer need not serve the documents on those participants separately. Therefore, applicants and other participants (or their counsel or representative) must apply for and receive a digital ID certificate before a hearing request/petition to intervene is filed so that they can obtain access to the document via the E-Filing system.

A person filing electronically using the agency's adjudicatory E-Filing system may seek assistance by contacting the NRC Meta System Help Desk through the ''Contact Us'' link located on the NRC Web site at *http://www.nrc.gov/site-help/e-submittals.html*, by e-mail at *MSHD.Resource@nrc.gov,* or by a toll-free call at 866–672–7640. The NRC Meta System Help Desk is available between 8 a.m. and 8 p.m., Eastern Time, Monday through Friday, excluding government holidays.

Participants who believe that they have a good cause for not submitting documents electronically must file an exemption request, in accordance with 10 CFR 2.302(g), with their initial paper filing requesting authorization to continue to submit documents in paper format. Such filings must be submitted by: (1) First class mail addressed to the Office of the Secretary of the Commission, U.S. Nuclear Regulatory Commission, Washington, DC 20555–0001, Attention: Rulemaking and Adjudications Staff; or (2) courier, express mail, or expedited delivery service to the Office of the Secretary, Sixteenth Floor, One White Flint North, 11555 Rockville Pike, Rockville, Maryland 20852, Attention: Rulemaking and Adjudications Staff. Participants filing a document in this manner are responsible for serving the document on all other participants. Filing is considered complete by first-class mail as of the time of deposit in the mail, or by courier, express mail, or expedited delivery service upon depositing the document with the provider of the service. A presiding officer, having granted an exemption request from using E-Filing, may require a participant or party to use E-Filing if the presiding officer subsequently determines that the reason for granting the exemption from use of E-Filing no longer exists.

Documents submitted in adjudicatory proceedings will appear in NRC's electronic hearing docket which is available to the public at *http://*

ehd1.nrc.gov/EHD/, unless excluded pursuant to an order of the Commission, or the presiding officer. Participants are requested not to include personal privacy information, such as social security numbers, home addresses, or home phone numbers in their filings, unless an NRC regulation or other law requires submission of such information. With respect to copyrighted works, except for limited excerpts that serve the purpose of the adjudicatory filings and would constitute a Fair Use application, participants are requested not to include copyrighted materials in their submission.

If a person (other than USEC) requests a hearing, that person shall set forth with particularity the manner in which his interest is adversely affected by this Confirmatory Order and shall address the criteria set forth in 10 CFR 2.309(d) and (f).

If a hearing is requested by a person whose interest is adversely affected, the Commission will issue an order designating the time and place of any hearing. If a hearing is held, the issue to be considered at such hearing shall be whether this Confirmatory Order should be sustained.

In the absence of any request for hearing, or written approval of an extension of time in which to request a hearing, the provisions specified in Section V above shall be final 20 days from the date this Confirmatory Order is published in the **Federal Register** without further order or proceedings. If an extension of time for requesting a hearing has been approved, the provisions specified in Section V shall be final when the extension expires if a hearing request has not been received.

A request for hearing shall not stay the immediate effectiveness of this order.

Dated this 17th day of August 2011.

For the Nuclear Regulatory Commission.

Leonard D. Wert, Jr.,

Deputy Regional Administrator for Operations.

[FR Doc. 2011–21902 Filed 8–25–11; 8:45 am]

BILLING CODE P

NUCLEAR REGULATORY COMMISSION

[NRC–2011–0194; Docket Nos. 50–335 and 50–389]

Florida Power and Light Company; St. Lucie Plant, Units 1 and 2; Environmental Assessment and Finding of No Significant Impact

The U.S. Nuclear Regulatory Commission (NRC) is considering issuance of an exemption from Title 10 of the Code of Federal Regulations (10 CFR) part 50, Appendix G, Section IV.A.2, for Facility Operating License Nos. DPR–67 and NPF–16, issued to Florida Power and Light Company, et al. (the licensee, FPL), for operation of St. Lucie Nuclear Plant, Units 1 and 2, located on Hutchinson Island in St. Lucie County, Florida. Therefore, as required by 10 CFR 51.21, the NRC performed an environmental assessment. Based on the results of the environmental assessment, the NRC is issuing a finding of no significant impact.

Environmental Assessment

Identification of the Proposed Action

The proposed action would approve an exemption for St. Lucie Nuclear Plant, Units 1 and 2, from certain requirements of 10 CFR part 50, Appendix G, ''Fracture Toughness Requirements.'' Specifically, the licensee requests approval of an exemption from the requirements of 10 CFR part 50, Appendix G, Section IV.A.2, ''Pressure-Temperature Limits and Minimum Temperature Requirements.''

The methodology developed by Combustion Engineering to calculate reactor coolant system (RCS) pressure-temperature (P–T) curves, heatup and cooldown limits and low temperature overpressure protection (LTOP) requirements is documented in topical report CE NPSD–683–A (Agencywide Documents Access and Management System (ADAMS) Accession No. ML011350387). The staff noted in its March 16, 2001 safety evaluation for this report that: ''The CE [Combustion Engineering] NSSS [nuclear steam supply system] methodology does not invoke the methods in the 1995 edition of Appendix G to the Code for calculating K_{IM} factors, and instead applies FEM [finite element modeling] methods for estimating the K_{IM} factors for the RPV shell * * * Except for loading inputs, the staff has determined that the K_{IM} calculation methods apply FEM modeling that is similar to that used for the determination of the K_{IT} factors. The staff has also determined that there is only a slight non-conservative difference between the P–T limits generated from the 1989 edition of Appendix G to the Code and those generated from CE NSSS methodology as documented in Evaluation No. 063–PENG–ER–096, Revision 00. The staff considers this difference to be reasonable and should be consistent with the expected improvements in P–T generation methods that have been incorporated into the 1995 edition of Appendix G to the Code. The staff therefore concludes that the CE NSSS methodology for generating P–T limits is equivalent to the current methodology in the 1995 edition of Appendix G to the Code, and is acceptable for P–T limit applications.'' The staff has extended this conclusion to the Section XI, Appendix G methodology of Code Editions through the 2004 Edition.

The staff has advised licensees to specify whether membrane stress intensity factors due to pressure loading, K_{IM}, are determined by obtaining a closed-form solution (per the American Society of Mechanical Engineers (ASME) Code, Section XI, Appendix G) or determined by applying finite element modeling methods (per CE NPSD–683–A, Revision 6). Stress intensity values, K_{IM}, for St. Lucie, Units 1 and 2 are calculated using the CE NSSS finite element modeling methods.

The Need for the Proposed Action

FPL is implementing the methodology documented in Topical Report CE NPSD–683–A to calculate the RCS pressure-temperature curves and LTOP limits for St. Lucie Nuclear Plant, Units 1 and 2. This methodology uses an FEM calculation that, although similar to the ASME Section XI requirements, is slightly less conservative. Section IV.A.2 of Appendix G to 10 CFR Part 50 states, ''The pressure-temperature limits identified as 'ASME Appendix G limits' in Table 3 require that the limits must be at least as conservative as limits obtained by following the methods of analysis and the margins of safety of Appendix G of Section XI of the ASME Code.'' Therefore, the use of the methodology documented in topical report CE NPSD–683–A requires an exemption from 10 CFR part 50, Appendix G, Section IV.A.2, in order to implement that methodology with a license granted under 10 CFR part 50.

Environmental Impacts of the Proposed Action

The NRC staff has completed its environmental assessment of the proposed exemption and has concluded

that the proposed exemption from the implementation of the requirements of 10 CFR part 50, Appendix G, Section IV.A.2 would not significantly affect plant safety and would not have a significant adverse affect on the probability of occurrence of an accident.

The proposed action would not result in any increased radiological hazards beyond those previously evaluated by the NRC staff in the Safety Evaluation Reports, dated November 8 and November 7, 1974, related to operation of St. Lucie Plant, Units 1 and 2, respectively. No changes are being made in the types of effluents that may be released offsite. There is no significant increase in the amount of any effluent released offsite. There is no significant increase in occupational or public radiation exposure. Therefore, there are no significant radiological environmental impacts associated with the proposed action.

The proposed action does not result in changes to land use or water use, or result in changes to the quality or quantity of non-radiological effluents. No changes to the National Pollution Discharge Elimination System permit are needed. No effects on the aquatic or terrestrial habitat in the vicinity or the plant, or to threatened, endangered, or protected species under the Endangered Species Act, or impacts to essential fish habitat covered by the Magnuson-Stevens Act are expected. There are no impacts to the air or ambient air quality. There are no impacts to historical and cultural resources. There would be no noticeable effect on socioeconomic conditions in the region. Therefore, no changes or different types of non-radiological environmental impacts are expected as a result of the proposed action. Accordingly, the NRC concludes that there are no significant environmental impacts associated with the proposed action.

The NRC has previously determined, as stated above, that methodology documented in CE NPSD–683–A provides similar results as those produced by the methods in Appendix G of 10 CFR Part 50. Although, in practice, the exemption allows the licensee to not meet the requirements of Appendix G, the differences between the two methodologies are small and the health and safety of the public remain adequately protected.

The details of the staff's safety evaluation will be provided in the exemption that will be issued as part of the letter to the licensee approving the exemption to the regulation, if granted.

Environmental Impacts of the Alternatives to the Proposed Action

As an alternative to the proposed action, the staff considered denial of the proposed action (*i.e.,* the no-action alternative). Denial of the exemption request would result in no change in current environmental impacts. If the proposed action were denied, the licensee would have to comply with the requirements of 10 CFR part 50, Appendix G, Section IV.A.2. This would cause unnecessary burden on the licensee, without a significant benefit in environmental impacts. The environmental impacts of the proposed exemption and the ''no action'' alternative are similar.

Alternative Use of Resources

The action does not involve the use of any different resources than those considered in the Final Environmental Statement related to the St. Lucie Nuclear Plant, Unit 1, dated June 1973; the Final Environmental Statement related to the operation of St. Lucie Nuclear Plant, Unit 2 (NUREG–0842), dated April 1982; and, the plant-specific Supplement 11 to NUREG–1437, ''Generic Environmental Impact Statement for License Renewal of Nuclear Power Plants,'' (GEIS). Supplement 11 of the GEIS, issued on May 16, 2003, addresses the renewal of operating licenses DPR–67 and NPF–16 for St. Lucie Plant, Units 1 and 2, for an additional 20 years of operation.

Agencies and Persons Consulted

In accordance with its stated policy, on August 17, 2011, the NRC staff consulted with the Florida State official, Mr. William A. Passetti of the Bureau of Radiation Control, regarding the environmental impact of the proposed action. The State official had no comments.

Finding of No Significant Impact

On the basis of the environmental assessment, the NRC concludes that the proposed action will not have a significant effect on the quality of the human environment. Accordingly, the NRC has determined not to prepare an environmental impact statement for the proposed action.

For further details with respect to the proposed action, see the licensee's letters dated March 3, 2011 (ADAMS Accession No. ML110660300), and April 28, 2011 (ADAMS Accession No. ML11119A136). Documents may be examined, and/or copied for a fee, at the NRC's Public Document Room (PDR), located at One White Flint North, Public File Area O1 F21, 11555 Rockville Pike (first floor), Rockville, Maryland. Publicly available documents created or received at the NRC are accessible electronically through ADAMS in the NRC Library at *http://www.nrc.gov/reading-rm/adams.html.* Persons who do not have access to ADAMS or who encounter problems in accessing the documents located in ADAMS should contact the NRC PDR Reference staff by telephone at 1–800–397–4209 or 301–415–4737, or send an e-mail to *pdr.resource@nrc.gov.*

Dated at Rockville, Maryland this 18th day of August 2011.

For the Nuclear Regulatory Commission.

Tracy J. Orf,

Project Manager, Plant Licensing Branch II–2, Division of Operating Reactor Licensing, Office of Nuclear Reactor Regulation.

[FR Doc. 2011–21901 Filed 8–25–11; 8:45 am]

BILLING CODE 7590–01–P

NUCLEAR REGULATORY COMMISSION

[Docket Nos. 50–352 and 50–353; NRC–2011–0166]

Exelon Generation Company, LLC; Notice of Intent To Prepare an Environmental Impact Statement and Conduct the Scoping Process for Limerick Generating Station, Units 1 and 2

Exelon Generation Company, LLC (Exelon) has submitted an application for renewal of Facility Operating Licenses NPF–39 and NPF–85 for an additional 20 years of operation at Limerick Generating Station Units 1 and 2 (LGS). LGS is located in Limerick, Pennsylvania.

The current operating licenses for LGS expire on October 26, 2024, for Unit 1, and June 22, 2029, for Unit 2. The application for renewal, dated June 22, 2011, was submitted pursuant to Title 10 of the Code of Federal Regulations (10 CFR) part 54, which included an environmental report (ER). A separate notice of receipt and availability of the application was published in the **Federal Register** on July 26, 2011 (76 FR 44624). A notice of acceptance for docketing of the application and opportunity for hearing regarding renewal of the facility operating license is also being published in the **Federal Register**. The purpose of this notice is to inform the public that the U.S. Nuclear Regulatory Commission (NRC or the Commission) will be preparing an environmental impact statement (EIS) related to the review of the license renewal application and to provide the public an opportunity to participate in the

environmental scoping process, as defined in 10 CFR 51.29.

As outlined in 36 CFR 800.8, ''Coordination with the National Environmental Policy Act,'' the NRC plans to coordinate compliance with Section 106 of the National Historic Preservation Act (NHPA) in meeting the requirements of the National Environmental Policy Act of 1969 (NEPA). Pursuant to 36 CFR 800.8(c), the NRC intends to use its process and documentation for the preparation of the EIS on the proposed action to comply with Section 106 of the NHPA in lieu of the procedures set forth at 36 CFR 800.3 through 800.6.

In accordance with 10 CFR 51.53(c) and 10 CFR 54.23, Exelon submitted the ER as part of the application. The ER was prepared pursuant to 10 CFR part 51 and is publicly available at the NRC public document room (PDR), located at One White Flint North, 11555 Rockville Pike, Rockville, Maryland 20852. The ER may also be viewed on the Internet at *http://www.nrc.gov/reactors/operating/licensing/renewal/applications.html.* In addition, paper copies of the ER are available to the public near the site at the Pottstown Regional Public Library, 500 East High Street, Pottstown, Pennsylvania 19464–5656, and the Royersford Free Public Library, 200 South 4th Avenue, Royerford, Pennsylvania 19468–2548.

This notice advises the public that the NRC intends to gather the information necessary to prepare a plant-specific supplement to the NRC's ''Generic Environmental Impact Statement (GEIS) for License Renewal of Nuclear Plants'' (NUREG–1437), related to the review of the application for renewal of the LGS operating licenses for an additional 20 years.

Possible alternatives to the proposed action (license renewal) include no action and reasonable alternative energy sources. The NRC is required by 10 CFR 51.95 to prepare a supplement to the GEIS in connection with the renewal of an operating license. This notice is being published in accordance with NEPA and the NRC's regulations found at 10 CFR Part 51.

The NRC will first conduct a scoping process for the supplement to the GEIS and, as soon as practicable thereafter, will prepare a draft supplement to the GEIS for public comment. Participation in the scoping process by members of the public and local, state, Tribal, and Federal government agencies is encouraged. The scoping process for the supplement to the GEIS will be used to accomplish the following:

a. Define the proposed action, which is to be the subject of the supplement to the GEIS;

b. Determine the scope of the supplement to the GEIS and identify the significant issues to be analyzed in depth;

c. Identify and eliminate from detailed study those issues that are peripheral or that are not significant;

d. Identify any environmental assessments and other ElSs that are being or will be prepared that are related to, but are not part of, the scope of the supplement to the GEIS being considered;

e. Identify other environmental review and consultation requirements related to the proposed action;

f. Indicate the relationship between the timing of the preparation of the environmental analyses and the Commission's tentative planning and decision-making schedule;

g. Identify any cooperating agencies and, as appropriate, allocate assignments for preparation and schedules for completing the supplement to the GEIS to the NRC and any cooperating agencies; and

h. Describe how the supplement to the GEIS will be prepared and include any contractor assistance to be used.

The NRC invites the following entities to participate in scoping:

a. The applicant, Exelon;

b. Any Federal agency that has jurisdiction by law or special expertise with respect to any environmental impact involved or that is authorized to develop and enforce relevant environmental standards;

c. Affected state and local government agencies, including those authorized to develop and enforce relevant environmental standards;

d. Any affected Indian Tribe;

e. Any person who requests or has requested an opportunity to participate in the scoping process; and

f. Any person who has petitioned or intends to petition for leave to intervene.

In accordance with 10 CFR 51.26, the scoping process for an EIS may include a public scoping meeting to help identify significant issues related to a proposed activity and to determine the scope of issues to be addressed in an EIS. The NRC has decided to hold public meetings for the LGS license renewal supplement to the GEIS. The scoping meetings will be held on September 22, 2011, and there will be two sessions to accommodate interested parties. The first session will convene at 2 p.m. (EST), and will continue until 4 p.m. The second session will convene at 7 p.m. with a repeat of the overview portions of the meeting and will continue until 9 p.m., as necessary. Both sessions will be held at the Sunnybrook Ballroom, 50 North Sunnybrook Road, Pottstown, Pennsylvania 19464–2946.

Both meetings will be transcribed and will include: (1) An overview by the NRC staff of the NEPA environmental review process, the proposed scope of the supplement to the GEIS, and the proposed review schedule; and (2) the opportunity for interested government agencies, organizations, and individuals to submit comments or suggestions on the environmental issues or the proposed scope of the supplement to the GEIS. Additionally, the NRC staff will host informal discussions one hour prior to the start of each session at the same location. No formal comments on the proposed scope of the supplement to the GEIS will be accepted during the informal discussions. To be considered, comments must be provided either at the transcribed public meetings or in writing, as discussed below.

Persons may register to attend or present oral comments at the meetings on the scope of the NEPA review by contacting the NRC Project Manager, Ms. Lisa Regner, by telephone at 800–368–5642, extension 1906, or by e-mail at *Lisa.Regner@nrc.gov* no later than September 16, 2011. Members of the public may also register to speak at the meeting within 15 minutes of the start of each session. Individual oral comments may be limited by the time available, depending on the number of persons who register. Members of the public who have not registered may also have an opportunity to speak if time permits. Public comments will be considered in the scoping process for the supplement to the GEIS. Ms. Regner will need to be contacted no later than September 9, 2011, if special equipment or accommodations are needed to attend or present information at the public meeting so that the NRC staff can determine whether the request can be accommodated.

ADDRESSES: Please include Docket ID NRC–2011–0166 in the subject line of your comments. For additional instructions on submitting comments and instructions on accessing documents related to this action, see ''Submitting Comments and Accessing Information'' in the **SUPPLEMENTARY INFORMATION** section of this document. You may submit comments by any one of the following methods:

• *Federal Rulemaking Web Site:* Go to *http://www.regulations.gov* and search for documents filed under Docket ID NRC–2011–0166. Address questions about NRC dockets to Carol Gallagher,

telephone: 301–492–3668; e-mail: *Carol.Gallagher@nrc.gov*.

• *Mail comments to:* Cindy Bladey, Chief, Rules, Announcements, and Directives Branch (RADB), Office of Administration, Mail Stop: TWB–05–B01M, U.S. Nuclear Regulatory Commission, Washington, DC 20555–0001.

• *Fax comments to:* RADB at 301–492–3446.

SUPPLEMENTARY INFORMATION:

Submitting Comments and Accessing Information

Comments submitted in writing or in electronic form will be posted on the NRC Web site and on the Federal rulemaking Web site, *http://www.regulations.gov*. Because your comments will not be edited to remove any identifying or contact information, the NRC cautions you against including any information in your submission that you do not want to be publicly disclosed.

The NRC requests that any party soliciting or aggregating comments received from other persons for submission to the NRC inform those persons that the NRC will not edit their comments to remove any identifying or contact information, and therefore, they should not include any information in their comments that they do not want publicly disclosed.

You can access publicly available documents related to this document using the following methods:

• *NRC's Public Document Room (PDR):* The public may examine and have copied, for a fee, publicly available documents at the NRC's PDR, O1–F21, One White Flint North, 11555 Rockville Pike, Rockville, Maryland 20852.

• *NRC's Agencywide Documents Access and Management System (ADAMS):* Publicly available documents created or received at the NRC are available online in the NRC Library at *http://www.nrc.gov/reading-rm/adams.html*. From this page, the public can gain entry into ADAMS, which provides text and image files of the NRC's public documents. If you do not have access to ADAMS or if there are problems in accessing the documents located in ADAMS, contact the NRC's PDR reference staff at 1–800–397–4209, 301–415–4737, or by e-mail to *pdr.resource@nrc.gov*. The ADAMS Accession Number for the LGS ER is ML11179A104.

• *Federal Rulemaking Web Site:* Public comments and supporting materials related to this notice can be found at *http://www.regulations.gov* by searching on Docket ID NRC–2011–0166.

Participation in the scoping process for the supplement to the GEIS does not entitle participants to become parties to the proceeding to which the supplement to the GEIS relates. Matters related to participation in any hearing are outside the scope of matters to be discussed at this public meeting. The notice of acceptance for docketing of the application and opportunity for hearing that was published in the **Federal Register** describes the hearing process.

Dated at Rockville, Maryland this 17th day of August, 2011.

For the Nuclear Regulatory Commission.

Dennis C. Morey,

Chief, Reactor Projects Branch 1, Division of License Renewal, Office of Nuclear Reactor Regulation.

[FR Doc. 2011–21921 Filed 8–25–11; 8:45 am]

BILLING CODE 7590–01–P

NUCLEAR REGULATORY COMMISSION

[Docket No. 04009068; NRC–2008–0391]

Notice of the Nuclear Regulatory Commission Issuance of Materials License SUA–1598 and Record of Decision for Lost Creek ISR, LLC Lost Creek In-Situ Recovery Project

AGENCY: U.S. Nuclear Regulatory Commission.

ACTION: Notice of issuance of materials license SUA–1598.

SUPPLEMENTARY INFORMATION: The U.S. Nuclear Regulatory Commission (NRC or the Commission) has issued a license to Lost Creek ISR, LLC (LCI) for its Lost Creek uranium in-situ recovery (ISR) project in Sweetwater County, Wyoming. Materials License SUA–1598 authorizes LCI to operate its facilities as proposed in its license application, as amended, and to possess uranium source and byproduct material at the Lost Creek Project. Furthermore, LCI will be required to operate under the conditions listed in Materials License SUA–1598.

This notice also serves as the record of decision for the NRC decision to approve LCI's license application for the Lost Creek Project and to issue Materials License SUA–1598. This record of decision satisfies the regulatory requirement in Section 51.102(a) of Title 10 of the Code of Federal Regulations (10 CFR), which requires a Commission decision on any action for which a final environmental impact statement has been prepared to be accompanied by or to include a concise public record of decision.

The NRC considers the entire publicly available record for a license application to constitute the agency's record of decision. Documents related to this application carry Docket Number 04009068. You can access the NRC's Agencywide Documents Access and Management System (ADAMS), which provides text and image files of the NRC's public documents in the NRC Library at *http://www.nrc.gov/reading-rm/adams.html*. These documents for the Lost Creek Project include the license application (including the applicant's environmental report) [ADAMS Accession No. ML081060502], the Commission's Safety Evaluation Report (SER) published in August 2011 [ADAMS Accession No. ML112231724], and the Commission's Final Supplemental Environmental Impact Statement (FSEIS) (NUREG–1910, Supplement 3) published in June 2011 [ADAMS Accession No. ML11125A006]. The record of decision also includes the applicable portions of the Generic Environmental Impact Statement for In-Situ Leach Uranium Milling Facilities (NUREG–1910), as incorporated by reference in the FSEIS.

As discussed in the Lost Creek FSEIS, the Commission considered a range of alternatives. The reasonable alternatives discussed in detail were the applicant's proposal as described in its license application to conduct in-situ uranium recovery on the site, the no-action alternative, and the dry yellowcake alternative. Under the proposed action, yellowcake slurry would be produced, but not dried, onsite, whereas the dry yellowcake alternative considered the impacts of installing a dryer onsite to produce dry yellowcake from the yellowcake slurry produced onsite. Before a dryer could be installed on the Lost Creek Project site, the licensee would be required to submit a license amendment request, and the NRC would need to approve such a request. Other alternatives considered, but eliminated from detailed analysis, include conventional uranium mining and milling, conventional mining and heap leach processing, alternate lixiviants, and alternative wastewater disposal options. The Lost Creek FSEIS also discussed the factors considered when evaluating the alternatives, a comparison among the alternatives, and license conditions and monitoring programs. The FSEIS also contained the NRC staff recommendation to the Commission, related to the environmental aspects of the proposed action that the source material license should be issued as requested, unless safety issues mandate otherwise.

The NRC has found that the application for the source materials license complied with the standards and requirements of the Atomic Energy Act of 1954, as amended (the Act), and the Commission's regulations. As required by the Act and the Commission's regulations in 10 CFR 40.32(b)–(c), the staff has found that LCI is qualified by reason of training and experience to use source material for the purpose that it requested, and that LCI's proposed equipment and procedures for use at its Lost Creek Project are adequate to protect public health and minimize danger to life or property. The NRC staff's review supporting these findings is documented in the SER. The NRC staff also concluded, in accordance with 10 CFR 40.32(d), that issuance of Materials License SUA–1598 to LCI will not be inimical to the common defense and security or to the health and safety of the public. The staff also found in accordance with 10 CFR 40.32(e), after weighing the environmental, economic, technical, and other benefits against environmental costs and considering available alternatives, that the appropriate action is to issue Materials License SUA–1598.

LCI's request for a materials license was previously noticed in the **Federal Register** on July 10, 2008 (73 FR 39728), with a notice of an opportunity to request a hearing. The NRC did not receive any requests for a hearing on the license application.

SUPPLEMENTARY INFORMATION: In accordance with 10 CFR 2.390 of the NRC's ''Rules of Practice,'' the details with respect to this action, including the SER and accompanying documentation and license, are available electronically in the NRC Library at *http://www.nrc.gov/reading-rm/adams.html.* The ADAMS accession numbers for the documents related to this notice are:

1	Applicant's Application, March 20, 2008	ML081060525
2	Response to Request for Additional Information, December 12, 2008	ML090080451
3	Response to Request for Additional Information, January 16, 2009	ML090360163
4	Response to Request for Additional Information, February 27, 2009	ML090840399
5	Generic Environmental Impact Statement for *In-Situ* Leach Uranium Milling Facilities, May 2009	ML091530075
6	Response to Request for Additional Information, August 5, 2009	ML092310728
7	Applicant's Notification of Monitoring Well Network, May 22, 2009	ML091740295
8	Lost Creek Project Exemption Request, July 2, 2009	ML091940438
9	Exemption to 10 CFR 40.42(e), April 6, 2010	ML093350365
10	Response to Open Issues in Safety Evaluation Report, April 22, 2010	ML102100241
11	Revisions to Application, April 22, 2010	ML102420249
12	Clarifications to Technical Report, May 14, 2010	ML101600528
13	Replacement Pages to Application, June 24, 2010	ML101820155
14	Supplemental Environmental Impact Statement for the Lost Creek ISR Project in Sweetwater County, Wyoming, June 2011.	ML11125A006
15	NRC Safety Evaluation Report, August 2011	ML112231724
16	Source Materials License for Lost Creek, August 17, 2011	ML111940049

If you do not have access to ADAMS, or if there are problems in accessing the documents located in ADAMS, contact the NRC Public Document Room (PDR) Reference staff at 1–800–397–4209 or 301–415–4737, or via e-mail to *PDR.Resource@nrc.gov.*

These documents may also be viewed electronically on the public computers located at the NRC's PDR, O 1 F21, One White Flint North, 11555 Rockville Pike, Rockville, MD 20852. The PDR reproduction contractor will copy documents for a fee.

FOR FURTHER INFORMATION CONTACT: Tanya Palmateer Oxenberg, Ph.D., Project Manager, Uranium Recovery Licensing Branch, Decommissioning and Uranium Recovery Licensing Directorate, Division of Waste Management and Environmental Protection, Office of Federal and State Materials and Environmental Management Programs, U.S. Nuclear Regulatory Commission, Washington, DC 20555. Telephone: (301) 415–6142; fax number: (301) 415–5369; e-mail: *tanya.oxenberg@nrc.gov.*

Dated at Rockville, Maryland this 17th day of August 2011.

For the Nuclear Regulatory Commission.

Keith I. McConnell,

Deputy Director, Decommissioning and Uranium Recovery Licensing Directorate, Division of Waste Management and Environmental Protection, Office of Federal and State Materials and Environmental Management Programs.

[FR Doc. 2011–21927 Filed 8–25–11; 8:45 am]

BILLING CODE 7590–01–P

SECURITIES AND EXCHANGE COMMISSION

Submission for OMB Review; Comment Request

Upon written request, copies available from: U.S. Securities and Exchange Commission, Office of Investor Education and Advocacy, Washington, DC 20549–0213.

Extension: Rule 15g–9; SEC File No. 270–325; OMB Control No. 3235–0385.

Notice is hereby given that pursuant to the Paperwork Reduction Act of 1995 (44 U.S.C. 3501 *et seq.*), the Securities and Exchange Commission (''Commission'') has submitted to the Office of Management and Budget a request for extension of the previously approved collection of information discussed below.

Section 15(c)(2) of the Securities Exchange Act of 1934 (15 U.S.C. 78a *et seq.*) (the ''Exchange Act'') authorizes the Commission to promulgate rules that prescribe means reasonably designed to prevent fraudulent, deceptive, or manipulative practices in connection with over-the-counter (''OTC'') securities transactions. Pursuant to this authority, the Commission in 1989 adopted Rule 15a–6 which was subsequently redesignated as Rule 15g–9, 17 CFR 240.15g–9 (the ''Rule''). The Rule requires broker-dealers to produce a written suitability determination for, and to obtain a written customer agreement to, certain recommended transactions in penny stocks that are not registered on a national securities exchange, and whose issuers do not meet certain minimum financial standards. The Rule is intended to prevent the indiscriminate use by broker-dealers of fraudulent, high pressure telephone sales campaigns to sell penny stocks to unsophisticated customers.

The Commission staff estimates that there are approximately 253 broker-dealers subject to the Rule. The burden of the Rule on a respondent varies

widely depending on the frequency with which new customers are solicited. On the average for all respondents, the staff has estimated that respondents process three new customers per week, or approximately 156 new customer suitability determinations per year. We also estimate that a broker-dealer would expend approximately one-half hour per new customer in obtaining, reviewing, and processing (including transmitting to the customer) the information required by Rule 15g–9, and each respondent would consequently spend 78 hours annually (156 customers × .5 hours) obtaining the information required in the rule. We determined, based on the estimate of 253 broker-dealer respondents, that the current annual burden of Rule 15g–9 is 19,734 hours (253 respondents × 78 hours).

In addition, we estimate that if tangible communications alone are used to transmit the documents required by Rule 15g–9, each customer should take: (1) No more than eight minutes to review, sign and return the suitability determination document; and (2) no more than two minutes to either read and return or produce the customer agreement for a particular recommended transaction in penny stocks, listing the issuer and number of shares of the particular penny stock to be purchased, and send it to the broker-dealer. Thus, the total current customer respondent burden is approximately 10 minutes per response, for an aggregate total of 1,560 minutes for each broker-dealer respondent. Since there are 253 respondents, the annual burden for customer responses is 394,680 minutes (1,560 customer minutes per each of the 253 respondents) or 6,578 hours.

In addition, we estimate that, if tangible means of communications alone are used, broker-dealers could incur a recordkeeping burden under Rule 15g–9 of approximately two minutes per response. Since there are approximately 253 broker-dealer respondents and each respondent would have approximately 156 responses annually, respondents would incur an aggregate recordkeeping burden of 78,936 minutes (253 respondents × 156 responses × 2 minutes per response), or 1,315 hours. Accordingly, the aggregate annual hour recordkeeping burden associated with Rule 15g–9 is 27,627 hours (19,734 hours to prepare the suitability statement and agreement + 6,578 hours for customer review + 1,315 hours for processing).

We recognize that under the amendments to Rule 15g–9, the burden hours may be slightly reduced if the transaction agreement required under the rule is provided through electronic means such as an e-mail from the customer to the broker-dealer (*e.g.,* the customer may take only one minute, instead of the two minutes estimated above, to provide the transaction agreement by e-mail rather than regular mail). If each of the customer respondents estimated above communicates with his or her broker-dealer electronically, the total burden hours on the customers would be reduced from 10 minutes to 9 minutes per response, or an aggregate total of 1,404 minutes per respondent (156 customers × 9 minutes for each customer). Since there are 253 respondents, the annual customer respondent burden, if electronic communications were used by all customers, would be approximately 355,212 minutes (253 respondents × 1,404 minutes per each respondent), or 5,920 hours. We do not believe the time burden on broker-dealers in obtaining, reviewing, and processing the suitability determination would change through use of electronic communications. In addition, we do not believe that, based on information currently available to us, recordkeeping burdens under Rule 15g–9 would change where the required documents were sent or received through means of electronic communication. Thus, if all broker-dealer respondents obtain and send the documents required under the rule electronically, the aggregate annual hour burden associated with Rule 15g–9 would be 26,969 hours (19,734 hours to prepare the suitability statement and agreement + 5,920 hours for customer review + 1,315 recordkeeping hours).

We cannot estimate how many broker-dealers and customers will choose to communicate electronically. If we assume that 50 percent of respondents would continue to provide documents and obtain signatures in tangible form, and 50 percent would choose to communicate electronically in satisfaction of the requirements of Rule 15g–9, the total aggregate hour burden would be 27,297 burden hours ((27,627 aggregate burden hours for documents and signatures in tangible form × 0.50 of the respondents = 13,813 hours) + (26,969 aggregate burden hours for electronically signed and transmitted documents × 0.50 of the respondents = 13,484 hours).

The broker-dealer must keep the written suitability determination and customer agreement required by the Rule for at least three years. Completing the suitability determination and obtaining the customer agreement in writing is mandatory for broker-dealers who effect transactions in penny stocks and do not qualify for an exemption, but does not involve the collection of confidential information. Please note that an agency may not conduct or sponsor, and a person is not required to respond to, a collection of information unless it displays a currently valid control number.

The Commission may not conduct or sponsor a collection of information unless it displays a currently valid control number. No person shall be subject to any penalty for failing to comply with a collection of information subject to the PRA that does not display a valid Office of Management and Budget (OMB) control number.

Background documentation for this information collection may be viewed at the following link, *http://www.reginfo.gov.* Comments should be directed to (i) Desk Officer for the Securities and Exchange Commission, Office of Information and Regulatory Affairs, Office of Management and Budget, Room 10102, New Executive Office Building, Washington, DC 20503 or by sending an e-mail to: *Shagufta_Ahmed@omb.eop.gov;* and (ii) Thomas Bayer, Director/Chief Information Officer, Securities and Exchange Commission, c/o Remi Pavlik-Simon, 6432 General Green Way, Alexandria, VA 22312 or send an e-mail to: *PRA_Mailbox@sec.gov.* Comments must be submitted to OMB within 30 days of this notice.

Dated: August 22, 2011.

Elizabeth M. Murphy,

Secretary.

[FR Doc. 2011–21858 Filed 8–25–11; 8:45 am]

BILLING CODE 8011–01–P

SECURITIES AND EXCHANGE COMMISSION

Submission for OMB Review; Comment Request

Upon Written Request, Copies Available From: Securities and Exchange Commission, Office of Investor Education and Advocacy, Washington, DC 20549.

Extension: Rule 17f–2(c); SEC File No. 270–35; OMB Control No. 3235–0029.

Notice is hereby given that pursuant to the Paperwork Reduction Act of 1995 (44 U.S.C. 3501 *et seq.*), the Securities and Exchange Commission (''Commission'') has submitted to the Office of Management and Budget requests for approval of extension of Rule 17f–2(c) (17 CFR 240.17f–2(c)).

Rule 17f–2(c) allows persons required to be fingerprinted pursuant to Section 17(f)(2) of the Securities Exchange Act of 1934 to submit their fingerprints

through a registered securities exchange or a national securities association in accordance with a plan submitted to and approved by the Commission. Plans have been approved for the American, Boston, Chicago, New York, Pacific, and Philadelphia stock exchanges and for the Financial Industry Regulatory Authority (''FINRA'') and the Chicago Board Options Exchange. Currently, the bulk of the fingerprints are submitted through FINRA.

It is estimated that approximately 4,939 respondents submit approximately 288,000 sets of fingerprints (consisting of 133,000 electronic fingerprints and 155,000 fingerprint cards) to exchanges or a national securities association on an annual basis. The Commission estimates that it would take approximately 15 minutes to create and submit each fingerprint card. The total reporting burden is therefore estimated to be 72,000 hours, or approximately 15 hours per respondent, annually. In addition, the exchanges and FINRA charge an estimated $30.25 fee for processing fingerprint cards, resulting in a total annual cost to all 4,939 respondents of $8,712,000, or $1,764 per respondent per year.

Because the Federal Bureau of Investigation will not accept fingerprint cards directly from submitting organizations, Commission approval of plans from certain exchanges and national securities associations is essential to the Congressional goal of fingerprint personnel in the security industry. The filing of these plans for review assures users and their personnel that fingerprint cards will be handled responsibly and with due care for confidentiality.

Submission of fingerprint plans under Rule 17f-2(c) is mandatory for self-regulatory organizations. An agency may not conduct or sponsor, and a person is not required to respond to, a collection of information unless it displays a currently valid control number. Background documentation for this information collection may be viewed at the following link, *http://www.reginfo.gov*. Comments should be directed to: (i) Desk Officer for the Securities and Exchange Commission, Office of Information and Regulatory Affairs, Office of Management and Budget, Room 10102, New Executive Office Building, Washington, DC 20503 or by sending an e-mail to: *Shagufta_Ahmed@omb.eop.gov;* and Thomas Bayer, Director/Chief Information Officer, Securities and Exchange Commission, c/o Remi Pavlik-Simon, 6432 General Green Way, Alexandria, VA 22312 or send an e-mail to: *PRA_Mailbox@sec.gov*. Comments must be submitted to OMB within 30 days of this notice.

Dated: August 22, 2011.

Elizabeth M. Murphy,

Secretary.

[FR Doc. 2011–21860 Filed 8–25–11; 8:45 am]

BILLING CODE 8011–01–P

SECURITIES AND EXCHANGE COMMISSION

Submission for OMB Review; Comment Request

Upon written request, copies available from: Securities and Exchange Commission, Office of Investor Education and Advocacy, Washington, DC 20549–0213.

Extension: Form 8–A; OMB Control No. 3235–0056; SEC File No. 270–54.

Notice is hereby given that, pursuant to the Paperwork Reduction Act of 1995 (44 U.S.C. 3501 *et seq.*), the Securities and Exchange Commission (''Commission'') has submitted to the Office of Management and Budget this request for extension of the previously approved collection of information discussed below.

Form 8–A (17 CFR 249.208a) is a registration statement used to register a class of securities under Sections 12(b) and 12(g) of the Securities Exchange Act of 1934 (15 U.S.C. 78*l*(b) and 78*l*(g))(''Exchange Act''). Section 12(a) (15 U.S.C. 78*l*(a) of the Exchange Act requires securities traded on a national exchange to be registered under the Exchange Act (15 U.S.C. 78a *et seq.*). Exchange Act Section 12(b) establishes the registration procedures. Section 12(g) and Rule 12g–1 (17 CFR 240.12g–1) under the Exchange Act requires issuers engaged in interstate commerce or in a business affecting interstate commerce, that has total assets of $10,000,000 or more, and a class of equity security held of record by 500 or more persons to register that class of security. The respondents are companies offering securities. The information must be filed with the Commission on occasion. Form 8–A is a public document and filing is mandatory. The form takes approximately 3 hours to prepare and is filed by 1,170 respondents for a total of 3,510 annual burden hours.

An agency may not conduct or sponsor, and a person is not required to respond to, a collection of information unless it displays a currently valid control number.

The public may view the background documentation for this information collection at the following Web site, *http://www.reginfo.gov* . Comments should be directed to: (i) Desk Officer for the Securities and Exchange Commission, Office of Information and Regulatory Affairs, Office of Management and Budget, Room 10102, New Executive Office Building, Washington, DC 20503, or by sending an e-mail to: *Shagufta_Ahmed@omb.eop.gov;* and (ii) Thomas Bayer, Director/Chief Information Officer, Securities and Exchange Commission, c/o Remi Pavlik-Simon, 6432 General Green Way, Alexandria, VA 22312 or send an e-mail to: *PRA_Mailbox@sec.gov*. Comments must be submitted to OMB within 30 days of this notice.

Dated: August 22, 2011.

Elizabeth M. Murphy,

Secretary.

[FR Doc. 2011–21859 Filed 8–25–11; 8:45 am]

BILLING CODE 8011–01–P

SECURITIES AND EXCHANGE COMMISSION

[Release No. 34–65175; File No. SR–BX–2011–057]

Self-Regulatory Organizations; NASDAQ OMX BX, Inc.; Notice of Filing and Immediate Effectiveness of Proposed Rule Change To Establish and Adopt Fees for the New BX Pre-Trade Risk Management Service

August 19, 2011.

Pursuant to Section 19(b)(1) of the Securities Exchange Act of 1934 (''Act'') [1] and Rule 19b–4 thereunder,[2] notice is hereby given that, on August 16, 2011, NASDAQ OMX BX, Inc. (the ''Exchange'') filed with the Securities and Exchange Commission (''Commission'') the proposed rule change as described in Items I and II below, which Items have been prepared by the Exchange. The Commission is publishing this notice to solicit comments on the proposed rule change from interested persons.

I. Self-Regulatory Organization's Statement of the Terms of Substance of the Proposed Rule Change

The Exchange proposes to establish and adopt fees for the new BX Pre-Trade Risk Management service (''PRM''). The Exchange will implement the fee effective September 1, 2011.

The text of the proposed rule change is below. Proposed new language is in

[1] 15 U.S.C. 78s(b)(1).

[2] 17 CFR 240.19b–4.

italics; proposed deletions are in brackets.

* * * * *

7016. [Reserved] *BX Pre-Trade Risk Management*

(a) Users of BX Pre-trade Risk Management (''PRM'') will be assessed a monthly fee based on the following table, and such fees will not exceed $25,000 per member firm, per month:

Port tiers	*Number of PRM-enabled ports*	*Monthly fee*
Tier 1	*50 or more*	*$400 per port, per month.*
Tier 2	*20 to 49*	*$500 per port, per month.*
Tier 3	*5 to 19*	*$550 per port, per month.*
Tier 4	*1 to 4*	*$600 per port, per month.*

(b) Users of PRM services specified below will be assessed the following charges in addition to the applicable PRM-enabled port charges:

PRM Modules	*No charge.*
Aggregate Total Checks	*No charge.*
PRM Workstation Add-ons to an existing Workstation or WeblinkACT 2.0.	*$100 per each PRM Workstation Add-on per month.*

* * * * *

II. Self-Regulatory Organization's Statement of the Purpose of, and Statutory Basis for, the Proposed Rule Change

In its filing with the Commission, the Exchange included statements concerning the purpose of and basis for the proposed rule change and discussed any comments it received on the proposed rule change. The text of these statements may be examined at the places specified in Item IV below. The Exchange has prepared summaries, set forth in Sections A, B, and C below, of the most significant aspects of such statements.

A. Self-Regulatory Organization's Statement of the Purpose of, and Statutory Basis for, the Proposed Rule Change

1. Purpose

The Exchange is proposing to adopt BX Pre-trade Risk Management under Rule 7016. PRM provides member firms with the ability to set a wide range of parameters for orders to facilitate pre-trade protection by creating a PRM module defined to represent checks desired. Using PRM, member firms can increase controls on their trading activity and the trading activity of their clients and customers at the order level, including the opportunity to prevent potentially erroneous transactions. PRM validates orders entered on PRM-enabled ports prior to allowing those orders into its matching engine and, using parameters set by the subscriber, determines if the order should be sent for fulfillment. If PRM rejects an order, it alerts the member firm and provides it with clearly-defined reasons for the rejection.[3] These alerts are sent on Execution and Order/Message DROP copy lines/reports. The Exchange believes that PRM will be a useful tool to assist members in complying with the Commission's new market access rule[4] and related Exchange requirements.

PRM users may choose to set PRM Order Checks, Aggregate Total Checks within a PRM Module, and subscribe to PRM Workstation Add-ons to an existing Workstation or WeblinkACT 2.0. PRM manages risk by checking each order, before it is accepted into the system, against certain parameters pre-specified by the user within a module, such as maximum order size or value, order type restrictions, market session restrictions (pre/post market), security restrictions, including per-security limits, restricted stock list, and certain other criteria. These checks are in addition to the Fat Finger Check, which is available for all orders submitted through a RASH/FIX PRM-enabled port.[5] In order for a member firm to subscribe, at least one PRM Module per market participant ID (''MPID'') is required, but a user may have multiple PRM Module subscriptions per MPID, depending on the type and number of ports designated as PRM ports.[6] A PRM Module is created to validate individual orders against pre-specified parameters. Aggregate Total Checks allow users to limit overall daily trading activity based on Buy, Sell, and/or Net trading limits. These daily trading activity limits may be established at an aggregate limit and/or security specific limit per PRM Module. Member firms may subscribe to the PRM Workstation Add-on to an existing Workstation or WeblinkACT 2.0 for a fee.

The Exchange is proposing to assess a per-port fee for PRM under Rule 7016(a). This monthly port-based fee is tiered, decreasing as the number of PRM-enabled ports subscribed increase and the next tier is reached. The Exchange is also proposing to limit the fees assessed a member firm under the tiered fee structure to a total of $25,000 per month. Rule 7016(b) sets forth fees assessed for PRM Modules and Aggregate Total Check, which will be available to subscribers at no cost, and a monthly fee of $100 per each PRM Workstation Add-on to an existing Workstation or WeblinkACT 2.0 per month.

The NASDAQ Stock Market (''NASDAQ'') has offered Pre-trade Risk Management to its members for many years, and the Exchange is now proposing to offer member firms the identical service offered at the same fee levels.[7] A member firm that is an existing subscriber of NASDAQ PRM, however, must subscribe separately to BX PRM to receive the service for its Exchange order flow.

[3] For example, PRM provides a ''Fat Finger Check,'' which allows a user to compare price instructions on incoming orders against the current displayed size and price in the market. If the order is not in line with the displayed price and size, the order will be rejected before it can execute. Users can set order limits at several levels to ensure that clearly erroneous orders never execute.

[4] 17 CFR 240.15c3–5. *See* Securities Exchange Act Release No. 63241 (November 3, 2010), 75 FR 69792 (November 15, 2010).

[5] *Id.*

[6] A member firm using FIX or Rash ports can configure its PRM Module to pre-trade-manage a subscriber's order flow for a specified MPID and PRM-enabled port, or for an account within an MPID. A member using OUCH ports can configure its PRM Module to pre-trade-manage a subscriber's order flow for a specified port.

[7] The Exchange notes that NASDAQ recently amended the fees assessed for PRM and its services. *See* Securities Exchange Act Release No. 65020 (August 3, 2011), 76 FR 48193 (August 8, 2011) (SR–NASDAQ–2011–099).

2. Statutory Basis

The Exchange believes that the proposed rule change is consistent with Section 6(b)(4) of the Act[8] in that it provides for the equitable allocation of reasonable dues, fees and other charges among members and issuers and other persons using any facility or system which the Exchange operates or controls, and it does not unfairly discriminate between customers, issuers, brokers or dealers. The new PRM fee schedule applies to all subscribers equally based on the number of ports subscribed. The proposed fees will cover the costs associated with separately offering the service, responding to customer requests, configuring Exchange systems, programming to user specifications, and administering the service, among other things, and may provide the Exchange with a profit to the extent costs are covered.

The Exchange also believes that the proposed rule change is consistent with the provisions of Section 6(b)(5) of the Act[9] because it is designed to prevent fraudulent and manipulative acts and practices, to promote just and equitable principles of trade, to foster cooperation and coordination with persons engaged in facilitating transactions in securities, and to remove impediments to and perfect the mechanism of a free and open market and a national market system. PRM is designed to assist member firms in avoiding entry of erroneous orders by screening out those that exceed pre-determined limits, which otherwise may harm both the member firm and the quality of the markets. As such, PRM is an important compliance tool that members may use to help maintain the regulatory integrity of the markets.

B. Self-Regulatory Organization's Statement on Burden on Competition

The Exchange does not believe that the proposed rule change will result in any burden on competition that is not necessary or appropriate in furtherance of the purposes of the Act, as amended.

C. Self-Regulatory Organization's Statement on Comments on the Proposed Rule Change Received From Members, Participants, or Others

Written comments were neither solicited nor received.

[8] 15 U.S.C. 78f(b)(4).

[9] 15 U.S.C. 78f(b)(5).

III. Date of Effectiveness of the Proposed Rule Change and Timing for Commission Action

Because the foregoing proposed rule change does not significantly affect the protection of investors or the public interest, does not impose any significant burden on competition, and, by its terms, does not become operative for 30 days from the date on which it was filed, or such shorter time as the Commission may designate, it has become effective pursuant to Section 19(b)(3)(A) of the Act[10] and Rule 19b–4(f)(6) thereunder.[11]

The Exchange has requested that the Commission waive the 30-day operative delay. The Commission believes that waiver of the operative delay is consistent with the protection of investors and the public interest. Such a waiver will allow the Exchange to offer the PRM service, which a member may use as a tool that could assist compliance with certain regulatory obligations and enhance market integrity, as soon as possible. Accordingly, the Commission designates the proposal operative upon filing.[12]

At any time within 60 days of the filing of the proposed rule change, the Commission summarily may temporarily suspend such rule change if it appears to the Commission that such action is necessary or appropriate in the public interest, for the protection of investors, or otherwise in furtherance of the purposes of the Act.

IV. Solicitation of Comments

Interested persons are invited to submit written data, views, and arguments concerning the foregoing, including whether the proposed rule change is consistent with the Act. Comments may be submitted by any of the following methods:

Electronic Comments

- Use the Commission's Internet comment form (*http://www.sec.gov/rules/sro.shtml*); or
- Send an e-mail to *rule-comments@sec.gov.* Please include File Number SR–BX–2011–057 on the subject line.

Paper Comments

- Send paper comments in triplicate to Elizabeth M. Murphy, Secretary, Securities and Exchange Commission, 100 F Street, NE., Washington, DC 20549–1090.

All submissions should refer to File Number SR–BX–2011–057. This file number should be included on the subject line if e-mail is used. To help the Commission process and review your comments more efficiently, please use only one method. The Commission will post all comments on the Commission's Internet Web site (*http://www.sec.gov/rules/sro.shtml*). Copies of the submission, all subsequent amendments, all written statements with respect to the proposed rule change that are filed with the Commission, and all written communications relating to the proposed rule change between the Commission and any person, other than those that may be withheld from the public in accordance with the provisions of 5 U.S.C. 552, will be available for Web site viewing and printing in the Commission's Public Reference Room, 100 F Street, NE., Washington, DC 20549, on official business days between the hours of 10 a.m. and 3 p.m. Copies of the filing also will be available for inspection and copying at the principal office of the Exchange. All comments received will be posted without change; the Commission does not edit personal identifying information from submissions. You should submit only information that you wish to make available publicly. All submissions should refer to File Number SR–BX–2011–057 and should be submitted on or before September 16, 2011.

For the Commission, by the Division of Trading and Markets, pursuant to delegated authority.[13]

Elizabeth M. Murphy,

Secretary.

[FR Doc. 2011–21854 Filed 8–25–11; 8:45 am]

BILLING CODE 8011–01–P

[10] 15 U.S.C. 78s(b)(3)(A).

[11] 17 CFR 240.19b–4(f)(6). In addition, Rule 19b–4(f)(6)(iii) requires the Exchange to give the Commission written notice of the Exchange's intent to file the proposed rule change, along with a brief description and text of the proposed rule change, at least five business days prior to the date of filing of the proposed rule change, or such shorter time as designated by the Commission. The Exchange has satisfied this requirement.

[12] For purposes only of waiving the 30-day operative delay, the Commission has considered the proposed rule's impact on efficiency, competition, and capital formation. *See* 15 U.S.C. 78c(f).

[13] 17 CFR 200.30–3(a)(12).

SECURITIES AND EXCHANGE COMMISSION

[Release No. 34–65174; File No. SR–Phlx–2011–115]

Self-Regulatory Organizations; NASDAQ OMX PHLX LLC; Notice of Filing and Immediate Effectiveness To Establish and Adopt Fees for the New PSX Pre-Trade Risk Management Service

August 19, 2011.

Pursuant to Section 19(b)(1) of the Securities Exchange Act of 1934 (''Act'')[1] and Rule 19b–4 thereunder,[2] notice is hereby given that, on August 16, 2011, NASDAQ OMX PHLX LLC (the ''Exchange'') filed with the Securities and Exchange Commission (''Commission'') the proposed rule change as described in Items I and II below, which Items have been prepared by the Exchange. The Commission is publishing this notice to solicit comments on the proposed rule change from interested persons.

I. Self-Regulatory Organization's Statement of the Terms of Substance of the Proposed Rule Change

The Exchange proposes to establish and adopt fees for the new PSX Pre-Trade Risk Management Service (''PRM''). The Exchange will implement the fee effective September 1, 2011.

The text of the proposed rule change is available at the principal office of the Exchange, at the Commission's Public Reference Room, and at the Commission's Web site at *http://www.sec.gov.*

II. Self-Regulatory Organization's Statement of the Purpose of, and Statutory Basis for, the Proposed Rule Change

In its filing with the Commission, the Exchange included statements concerning the purpose of and basis for the proposed rule change and discussed any comments it received on the proposed rule change. The text of these statements may be examined at the places specified in Item IV below. The Exchange has prepared summaries, set forth in Sections A, B, and C below, of the most significant aspects of such statements.

A. Self-Regulatory Organization's Statement of the Purpose of, and Statutory Basis for, the Proposed Rule Change

1. Purpose

The Exchange is proposing to amend Chapter VIII of its fee schedule to adopt PSX Pre-trade Risk Management and its related fees. PRM provides member firms with the ability to set a wide range of parameters for orders to facilitate pre-trade protection by creating a PRM module defined to represent checks desired. Using PRM, member firms can increase controls on their trading activity and the trading activity of their clients and customers at the order level, including the opportunity to prevent potentially erroneous transactions. PRM validates orders entered on PRM-enabled ports prior to allowing those orders into its matching engine and, using parameters set by the subscriber, determines if the order should be sent for fulfillment. If PRM rejects an order, it alerts the member firm and provides it with clearly-defined reasons for the rejection.[3] These alerts are sent on Execution and Order/Message DROP copy lines/reports. The Exchange believes that PRM will be a useful tool to assist members in complying with the Commission's new market access rule[4] and related Exchange requirements.

PRM users may choose to set PRM Order Checks, Aggregate Total Checks within a PRM Module, and subscribe to PRM Workstation Add-ons to an existing Workstation or WeblinkACT 2.0. PRM manages risk by checking each order, before it is accepted into the system, against certain parameters pre-specified by the user within a module, such as maximum order size or value, order type restrictions, market session restrictions (pre/post market), security restrictions, including per-security limits, restricted stock list, and certain other criteria. These checks are in addition to the Fat Finger Check, which is available for all orders submitted through a RASH/FIX PRM-enabled port.[5] In order for a member firm to subscribe, at least one PRM Module per market participant ID (''MPID'') is required, but a user may have multiple PRM Module subscriptions per MPID, depending on the type and number of ports designated as PRM ports.[6] A PRM Module is created to validate individual orders against pre-specified parameters. Aggregate Total Checks allow users to limit overall daily trading activity based on Buy, Sell, and/or Net trading limits. These daily trading activity limits may be established at an aggregate limit and/or security specific limit per PRM Module. Member firms may subscribe to the PRM Workstation Add-on to an existing Workstation or WeblinkACT 2.0 for a fee.

The Exchange is proposing to assess a per-port fee for PRM under the proposed paragraph (a) of the fee schedule. This monthly port-based fee is tiered, decreasing as the number of PRM-enabled ports subscribed increase and the next tier is reached. The Exchange is also proposing to limit the fees assessed a member firm under the tiered fee structure to a total of $25,000 per month. Proposed paragraph (b) of the fee schedule sets forth fees assessed for PRM Modules and Aggregate Total Check, which will be available to subscribers at no cost, and a monthly fee of $100 per each PRM Workstation Add-on to an existing Workstation or WeblinkACT 2.0 per month.

The NASDAQ Stock Market (''NASDAQ'') has offered Pre-trade Risk Management to its members for many years, and the Exchange is now proposing to offer member firms the identical service offered at the same fee levels.[7] A member firm that is an existing subscriber of NASDAQ PRM, however, must subscribe separately to PSX PRM to receive the service for its Exchange order flow.

2. Statutory Basis

The Exchange believes that the proposed rule change is consistent with Section 6(b)(4) of the Act[8] in that it provides for the equitable allocation of reasonable dues, fees and other charges among members and issuers and other persons using any facility or system which the Exchange operates or controls, and it does not unfairly discriminate between customers, issuers, brokers or dealers. The new PRM fee schedule applies to all

[1] 15 U.S.C. 78s(b)(1).

[2] 17 CFR 240.19b–4.

[3] For example, PRM provides a ''Fat Finger Check,'' which allows a user to compare price instructions on incoming orders against the current displayed size and price in the market. If the order is not in line with the displayed price and size, the order will be rejected before it can execute. Users can set order limits at several levels to ensure that clearly erroneous orders never execute.

[4] 17 CFR 240.15c3–5. *See* Securities Exchange Act Release No. 63241 (November 3, 2010), 75 FR 69792 (November 15, 2010).

[5] *Id.*

[6] A member firm using FIX or Rash ports can configure its PRM Module to pre-trade-manage a subscriber's order flow for a specified MPID and PRM-enabled port, or for an account within an MPID. A member using OUCH ports can configure its PRM Module to pre-trade-manage a subscriber's order flow for a specified port.

[7] The Exchange notes that NASDAQ recently amended the fees assessed for PRM and its services. *See* Securities Exchange Act Release No. 65020 (August 3, 2011), 76 FR 48193 (August 8, 2011) (SR–NASDAQ–2011–099).

[8] 15 U.S.C. 78f(b)(4).

subscribers equally based on the number of ports subscribed. The proposed fees will cover the costs associated with separately offering the service, responding to customer requests, configuring Exchange systems, programming to user specifications, and administering the service, among other things, and may provide the Exchange with a profit to the extent costs are covered.

The Exchange also believes that the proposed rule change is consistent with the provisions of Section 6(b)(5) of the Act[9] because it is designed to prevent fraudulent and manipulative acts and practices, to promote just and equitable principles of trade, to foster cooperation and coordination with persons engaged in facilitating transactions in securities, and to remove impediments to and perfect the mechanism of a free and open market and a national market system. PRM is designed to assist member firms in avoiding entry of erroneous orders by screening out those that exceed pre-determined limits, which otherwise may harm both the member firm and the quality of the markets. As such, PRM is an important compliance tool that members may use to help maintain the regulatory integrity of the markets.

B. Self-Regulatory Organization's Statement on Burden on Competition

The Exchange does not believe that the proposed rule change will result in any burden on competition that is not necessary or appropriate in furtherance of the purposes of the Act, as amended.

C. Self-Regulatory Organization's Statement on Comments on the Proposed Rule Change Received From Members, Participants, or Others

Written comments were neither solicited nor received.

III. Date of Effectiveness of the Proposed Rule Change and Timing for Commission Action

Because the foregoing proposed rule change does not significantly affect the protection of investors or the public interest, does not impose any significant burden on competition, and, by its terms, does not become operative for 30 days from the date on which it was filed, or such shorter time as the Commission may designate, it has become effective pursuant to Section 19(b)(3)(A) of the Act[10] and Rule 19b–4(f)(6) thereunder.[11]

The Exchange has requested that the Commission waive the 30-day operative delay. The Commission believes that waiver of the operative delay is consistent with the protection of investors and the public interest. Such a waiver will allow the Exchange to offer the PRM service, which a member may use as a tool that could assist compliance with certain regulatory obligations and enhance market integrity, as soon as possible. Accordingly, the Commission designates the proposal operative upon filing.[12]

At any time within 60 days of the filing of the proposed rule change, the Commission summarily may temporarily suspend such rule change if it appears to the Commission that such action is necessary or appropriate in the public interest, for the protection of investors, or otherwise in furtherance of the purposes of the Act.

IV. Solicitation of Comments

Interested persons are invited to submit written data, views, and arguments concerning the foregoing, including whether the proposed rule change is consistent with the Act. Comments may be submitted by any of the following methods:

Electronic Comments

- Use the Commission's Internet comment form (*http://www.sec.gov/rules/sro.shtml*); or
- Send an e-mail to *rule-comments@sec.gov.* Please include File Number SR–Phlx–2011–115 on the subject line.

Paper Comments

- Send paper comments in triplicate to Elizabeth M. Murphy, Secretary, Securities and Exchange Commission, 100 F Street, NE., Washington, DC 20549–1090.

All submissions should refer to File Number SR–Phlx–2011–115. This file number should be included on the subject line if e-mail is used. To help the Commission process and review your comments more efficiently, please use only one method. The Commission will post all comments on the Commission's Internet Web site (*http://www.sec.gov/rules/sro.shtml*). Copies of the submission, all subsequent amendments, all written statements with respect to the proposed rule change that are filed with the Commission, and all written communications relating to the proposed rule change between the Commission and any person, other than those that may be withheld from the public in accordance with the provisions of 5 U.S.C. 552, will be available for Web site viewing and printing in the Commission's Public Reference Room, 100 F Street, NE., Washington, DC 20549, on official business days between the hours of 10 a.m. and 3 p.m. Copies of the filing also will be available for inspection and copying at the principal office of the Exchange. All comments received will be posted without change; the Commission does not edit personal identifying information from submissions. You should submit only information that you wish to make available publicly. All submissions should refer to File Number SR–Phlx–2011–115 and should be submitted on or before September 16, 2011.

For the Commission, by the Division of Trading and Markets, pursuant to delegated authority.[13]

Elizabeth M. Murphy,

Secretary.

[FR Doc. 2011–21852 Filed 8–25–11; 8:45 am]

BILLING CODE 8011–01–P

[9] 15 U.S.C. 78f(b)(5).

[10] 15 U.S.C. 78s(b)(3)(A).

[11] 17 CFR 240.19b–4(f)(6). In addition, Rule 19b–4(f)(6)(iii) requires the Exchange to give the Commission written notice of the Exchange's intent to file the proposed rule change, along with a brief description and text of the proposed rule change, at least five business days prior to the date of filing of the proposed rule change, or such shorter time as designated by the Commission. The Exchange has satisfied this requirement.

[12] For purposes only of waiving the 30-day operative delay, the Commission has considered the proposed rule's impact on efficiency, competition, and capital formation. *See* 15 U.S.C. 78c(f).

[13] 17 CFR 200.30–3(a)(12).

SECURITIES AND EXCHANGE COMMISSION

[Release No. 34–65177; File No. SR–BX–2011–058]

Self-Regulatory Organizations; NASDAQ OMX BX, Inc.; Notice of Filing and Immediate Effectiveness of a Proposed Rule Change Extending the Pilot Period for BOX To Receive Inbound Routes of Orders From NOS

August 19, 2011.

Pursuant to Section 19(b)(1) of the Securities Exchange Act of 1934 (''Act'')[1] and Rule 19b–4 thereunder,[2] notice is hereby given that, on August 15, 2011, NASDAQ OMX BX, Inc. (the ''Exchange'') filed with the Securities and Exchange Commission (''Commission'') the proposed rule change as described in Items I and II below, which Items have been prepared by the Exchange. The Commission is publishing this notice to solicit

[1] 15 U.S.C. 78s(b)(1).

[2] 17 CFR 240.19b–4.

comments on the proposed rule change from interested persons.

I. Self-Regulatory Organization's Statement of the Terms of Substance of the Proposed Rule Change

The Exchange submits this proposed rule change to extend the pilot period of the Exchange's prior approval for the Boston Options Exchange (''BOX'') to accept inbound routes by NASDAQ Options Services, LLC (''NOS'') of Nasdaq Options Market (''NOM'') Exchange Direct Orders without checking the NOM book and 2) [sic] NOM non-System securities, including Exchange Direct Orders.[3]

II. Self-Regulatory Organization's Statement of the Purpose of, and Statutory Basis for, the Proposed Rule Change

In its filing with the Commission, the Exchange included statements concerning the purpose of and basis for the proposed rule change and discussed any comments it received on the proposed rule change. The text of these statements may be examined at the places specified in Item IV below. The Exchange has prepared summaries, set forth in Sections A, B, and C below, of the most significant aspects of such statements.

A. Self-Regulatory Organization's Statement of the Purpose of, and Statutory Basis for, the Proposed Rule Change

1. Purpose

Currently, NOS is the approved outbound routing facility of the NASDAQ Stock Market (the ''NASDAQ Exchange'') for NOM, providing outbound routing from NOM to other market centers.[4] The Exchange and the NASDAQ Exchange have previously adopted rules to permit BOX to receive inbound routes of certain option orders, specifically (1) Exchange Direct Orders without checking the NOM book prior to routing, and (2) NOM non-system securities, by NOS on a pilot basis.[5] The Exchange specifically has adopted a rule to prevent potential information advantages resulting from the affiliation between BOX and NOS, as related to NOS's authority to route orders from NOM to BOX.[6] NOS's authority to route these orders to BOX is subject to a pilot period ending on August 16, 2011.[7] The Exchange hereby seeks to extend the previously approved pilot period (with the attendant obligations and conditions) to permit BOX to accept inbound routes of (1) exchange Direct Orders without checking the NOM book and (2) NOM non-System securities, including Exchange Direct Orders that NOS routes from NOM for an additional 30 days, through September 15, 2011. The Exchange is also seeking permanent approval of the BOX and NOS inbound routing relationship.[8]

2. Statutory Basis

The Exchange believes that the proposed rule change is consistent with the provisions of Section 6 of the Act,[9] in general, and with Section 6(b)(5) of the Act,[10] in particular, in that the proposal is designed to prevent fraudulent and manipulative acts and practices, to promote just and equitable principles of trade, to foster cooperation and coordination with persons engaged in regulating, clearing, settling, processing information with respect to, and facilitating transactions in securities, to remove impediments to and perfect the mechanism of a free and open market and a national market system, and, in general, to protect investors and the public interest. Specifically, the proposed rule change would permit inbound routing of certain orders from NOM to BOX through NOS in a manner consistent with prior approvals and established protections. The Exchange believes that extending the previously approved pilot period for thirty days is a sufficient length to permit both the Exchange and the Commission to assess the impact of the Exchange's authority to permit BOX to receive direct inbound routes of certain option orders via NOS (including the attendant obligations and conditions), while the Commission evaluates the pending proposal to make the pilot permanent.[11]

B. Self-Regulatory Organization's Statement on Burden on Competition

The Exchange does not believe that the proposed rule change will impose any burden on competition not necessary or appropriate in furtherance of the purposes of the Act.

C. Self-Regulatory Organization's Statement on Comments on the Proposed Rule Change Received From Members, Participants, or Others

No written comments were either solicited or received.

III. Date of Effectiveness of the Proposed Rule Change and Timing for Commission Action

Because the foregoing proposed rule change does not significantly affect the protection of investors or the public interest, does not impose any significant burden on competition, and, by its terms, does not become operative for 30 days from the date on which it was filed, or such shorter time as the Commission may designate, it has become effective pursuant to Section 19(b)(3)(A) of the Act[12] and Rule 19b–4(f)(6) thereunder.[13]

The Exchange has requested that the Commission waive the 30-day operative delay. The Exchange believes that the proposed rule change does not significantly affect the protection of investors or the public interest because it seeks to extend for a limited period a currently operating pilot program so as

[3] Pursuant to chapter VI, Section 1(b) of the NOM Rules, ''System Securities'' are all options that are currently trading on NOM pursuant to chapter IV of the NOM rules. All other options are ''Non-System Securities.'' Pursuant to chapter VI, Section (1)(e)(7) of the NOM Rules, Exchange Direct Orders are orders that route directly to other Options Markets on an immediate-or-cancel basis without checking the NOM book for liquidity.

[4] NOM Rule chapter VI, Section 11(c). Under NOM Rule chapter VI, Section 11(c): (1) NOM routes orders in options via NOS, which serves as the sole ''routing facility'' of NOM; (2) the sole function of the routing facility is to route orders in options to away markets pursuant to NOM rules, solely on behalf of NOM; (3) NOS is a member of an unaffiliated self-regulatory organization, which is the designated examining authority for the broker-dealer; (4) the routing facility is subject to regulation as a facility of the NASDAQ Exchange, including the requirement to file proposed rule changes under Section 19 of the Act; (5) use of NOS to route order to other market centers is optional; (6) NOM must establish and maintain procedures and internal controls reasonably designed to adequately restrict the flow of confidential and proprietary information between the NASDAQ Exchange and its facilities (including the routing facility), and any other entity; and (7) the books, records, premises, officers, directors, agents, and employees of the routing facility, as a facility of the NASDAQ Exchange, shall be subject at all times to inspection and copying by the NASDAQ Exchange and the Commission.

[5] *See* Securities Exchange Act Release Nos. 60349 (July 20, 2009), 74 FR 37071 (July 27, 2009) (SR–BX–2009–035); 60354 (July 21, 2009), 74 FR 37074 (July 27, 2009) (SR–NASDAQ–2009–065); 62555 (July 22, 2010), 75 FR 44835 (July 29, 2010) (SR–BX–2010–051); 63364 (November 23, 2010), 75 FR 74121 (November 30, 2010) (SR–BX–2010–078); 64530 (May 20, 2011), 76 FR 30746 (May 26, 2011) (SR–BX–2011–027).

[6] *See* chapter XXXIX, Section 2(c) of the Grandfathered Rules of the Exchange.

[7] *See* Securities Exchange Act Release No. 64530 (May 20, 2011), 76 FR 30746 (May 26, 2011) (SR–BX–2011–027).

[8] *See* Securities Exchange Act Release No. 64896 (July 15, 2011), 76 FR 30476 (July 21, 2011) (SR–BX–2011–045).

[9] 15 U.S.C. 78f.

[10] 15 U.S.C. 78f(b)(5).

[11] *See* supra at note 8.

[12] 15 U.S.C. 78s(b)(3)(A).

[13] 17 CFR 240.19b–4(f)(6). In addition, Rule 19b–4(f)(6)(iii) requires the Exchange to give the Commission written notice of the Exchange's intent to file the proposed rule change, along with a brief description and text of the proposed rule change, at least five business days prior to the date of filing of the proposed rule change, or such shorter time as designated by the Commission. The Exchange has satisfied this requirement.

to allow the Exchange and Commission to assess whether to make the pilot permanent in accordance with its attendant obligations and conditions.[14] The Commission believes that waiver of the operative delay is consistent with the protection of investors and the public interest because such waiver would allow the pilot period to be extended without undue delay through September 15, 2011 while the Exchange's proposal to make the pilot permanent is under consideration. Therefore, the Commission designates the proposal operative upon filing.[15]

At any time within 60 days of the filing of the proposed rule change, the Commission summarily may temporarily suspend such rule change if it appears to the Commission that such action is necessary or appropriate in the public interest, for the protection of investors, or otherwise in furtherance of the purposes of the Act.

IV. Solicitation of Comments

Interested persons are invited to submit written data, views, and arguments concerning the foregoing, including whether the proposed rule change is consistent with the Act. Comments may be submitted by any of the following methods:

Electronic Comments

- Use the Commission's Internet comment form (*http://www.sec.gov/rules/sro.shtml*); or
- Send an e-mail to *rule-comments@sec.gov.* Please include File Number SR–BX–2011–058 on the subject line.

Paper Comments

- Send paper comments in triplicate to Elizabeth M. Murphy, Secretary, Securities and Exchange Commission, 100 F Street, NE., Washington, DC 20549–1090.

All submissions should refer to File Number SR–BX–2011–058. This file number should be included on the subject line if e-mail is used. To help the Commission process and review your comments more efficiently, please use only one method. The Commission will post all comments on the Commission's Internet Web site (*http://www.sec.gov/rules/sro.shtml*). Copies of the submission, all subsequent amendments, all written statements with respect to the proposed rule change that are filed with the Commission, and all written communications relating to the proposed rule change between the Commission and any person, other than those that may be withheld from the public in accordance with the provisions of 5 U.S.C. 552, will be available for Web site viewing and printing in the Commission's Public Reference Room, 100 F Street, NE., Washington, DC 20549, on official business days between the hours of 10 a.m. and 3 p.m. Copies of the filing also will be available for inspection and copying at the principal office of the Exchange. All comments received will be posted without change; the Commission does not edit personal identifying information from submissions. You should submit only information that you wish to make available publicly. All submissions should refer to File Number SR–BX–2011–058 and should be submitted on or before September 16,2011.

For the Commission, by the Division of Trading and Markets, pursuant to delegated authority.[16]

Elizabeth M. Murphy,

Secretary.

[FR Doc. 2011–21857 Filed 8–25–11; 8:45 am]

BILLING CODE 8011–01–P

[14] *See* SR–BX–2011–058, Item 7.

[15] For purposes only of waiving the 30-day operative delay, the Commission has considered the proposed rule's impact on efficiency, competition, and capital formation. *See* 15 U.S.C. 78c(f).

[16] 17 CFR 200.30–3(a)(12).

SECURITIES AND EXCHANGE COMMISSION

[Release No. 34–65185; File No. SR–NYSEArca–2011–61]

Self-Regulatory Organizations; NYSE Arca, Inc.; Notice of Filing of Proposed Rule Change Amending NYSE Arca Equities Rule 7.45(c)(2) To Make Permanent the Pilot Program That Permits the Exchange To Accept Inbound Orders Routed by Archipelago Securities LLC in Its Capacity as a Facility of Affiliated Exchanges and To Clarify the Text of NYSE Arca Equities Rule 7.45(c)(1)(B) to More Accurately Reflect the Regulatory Services Agreement Between the Exchange and the Financial Industry Regulatory Authority

August 22, 2011.

Pursuant to Section 19(b)(1) of the Securities Exchange Act of 1934 (''Act'')[1] and Rule 19b–4 thereunder,[2] notice is hereby given that on August 18, 2011, NYSE Arca, Inc. (''NYSE Arca'' or the ''Exchange'') filed with the Securities and Exchange Commission (''Commission'') the proposed rule change as described in Items I, II, and III below, which Items have been prepared by the Exchange. The Commission is publishing this notice to solicit comments on the proposed rule change from interested persons.

I. Self-Regulatory Organization's Statement of the Terms of Substance of the Proposed Rule Change

The Exchange proposes to amend NYSE Arca Equities Rule 7.45(c)(2) to make permanent the pilot program that permits the Exchange to accept inbound orders routed by Archipelago Securities LLC (''Arca Securities'') in its capacity as a facility of affiliated exchanges (with the attendant obligations and conditions) and to clarify the text of NYSE Arca Equities Rule 7.45(c)(1)(B) to more accurately reflect the regulatory services agreement (''RSA'') between the Exchange and the Financial Industry Regulatory Authority (''FINRA''). The text of the proposed rule change is available at the Exchange, at the Exchange's Web site at *http://www.nyse.com,* at the Commission's Public Reference Room, and at the Commission's Web site at *http://www.sec.gov.*

II. Self-Regulatory Organization's Statement of the Purpose of, and Statutory Basis for, the Proposed Rule Change

In its filing with the Commission, the self-regulatory organization included statements concerning the purpose of, and basis for, the proposed rule change and discussed any comments it received on the proposed rule change. The text of those statements may be examined at the places specified in Item IV below. The Exchange has prepared summaries, set forth in sections A, B, and C below, of the most significant parts of such statements.

A. Self-Regulatory Organization's Statement of the Purpose of, and Statutory Basis for, the Proposed Rule Change

1. Purpose

The Exchange proposes to amend NYSE Arca Equities Rule 7.45(c)(2) to make permanent the pilot program that permits the Exchange to accept inbound orders routed by Arca Securities in its capacity as a facility of affiliated exchanges (with the attendant obligations and conditions) and to clarify the text of NYSE Arca Equities Rule 7.45(c)(1)(B) to more accurately reflect the RSA between the Exchange and FINRA.[3]

[1] 15 U.S.C. 78s(b)(1).

[2] 17 CFR 240.19b–4.

[3] The change to the rule text to more accurately reflect the RSA between the Exchange and FINRA

Continued

Currently, Arca Securities is an approved outbound routing facility of the Exchange, providing outbound routing from the Exchange to other market centers.[4] The Exchange also has been previously approved to receive inbound routes of orders by Arca Securities in its capacity as an order routing facility of affiliated exchanges on a pilot basis until September 30, 2011.[5] On February 24, 2011, the Exchange filed an immediately effective proposal to extend the current pilot program until September 30, 2011.[6] On June 16, 2011, the Exchange filed an immediate effective proposal that codified the inbound routing authority in NYSE Arca Equities Rule 7.45(c).[7] The Exchange hereby seeks permanent approval to permit the Exchange to accept inbound orders that Arca Securities routes in its capacity as a facility of affiliated exchanges.

Under the pilot, the Exchange is committed to the following obligations and conditions:

- The Exchange will maintain an agreement pursuant to Rule 17d–2 under the Exchange Act with FINRA to relieve the Exchange of regulatory responsibilities for Arca Securities with respect to rules that are common rules between the Exchange and FINRA, and maintain an RSA with FINRA to perform regulatory responsibilities for Arca Securities for unique Exchange rules.
- The RSA will require the Exchange to provide FINRA with information, in an easily accessible manner, regarding all exception reports, alerts, complaints, trading errors, cancellations, investigations, and enforcement matters (collectively ''Exceptions'') in which Arca Securities is identified as a participant that has potentially violated Exchange or SEC Rules and of which the Exchange becomes aware, and shall require that FINRA provide a report, at least quarterly, to the Exchange quantifying all Exceptions in which Arca Securities is identified as a participant that has potentially violated Exchange or SEC Rules.[8]
- The Exchange, on behalf of its parent, NYSE Euronext, will establish and maintain procedures and internal controls reasonably designed to prevent Arca Securities from receiving any benefit, taking any action or engaging in any activity based on non-public information regarding planned changes to Exchange systems, obtained as a result of its affiliation with the Exchange, until such information is available generally to similarly situated ETP Holders of the Exchange in connection with the provision of inbound order routing to the Exchange.
- The Exchange may furnish to Arca Securities the same information on the same terms that the Exchange makes available in the normal course of business to any other ETP Holder.[9]

The Exchange is in compliance with the above-listed obligations and conditions. In meeting them, the Exchange has set up mechanisms that protect the independence of the Exchange's regulatory responsibility with respect to Arca Securities, as well as demonstrate that Arca Securities cannot use any information it may have because of its affiliation with the Exchange to its advantage. Since the Exchange has met all the above-listed obligations and conditions, it now seeks permanent approval of the Exchange and Arca Securities' inbound routing relationship. The Exchange also proposes to clarify the text of NYSE Arca Equities Rule 7.45(c)(1)(B) to more accurately reflect the RSA between the Exchange and FINRA and specify that the quarterly report of Exceptions shall be provided to the Exchange's Chief Regulatory Officer. Upon approval of the proposed rule change, the Exchange will continue to comply with the obligations and conditions as set forth in proposed NYSE Arca Equities Rule 7.45(c)(1).

2. Statutory Basis

The proposed rule change is consistent with Section 6(b)[10] of the Act, in general, and furthers the objectives of Section 6(b)(5),[11] in particular, in that the proposal is designed to prevent fraudulent and manipulative acts and practices, to promote just and equitable principles of trade, to foster cooperation and coordination with persons engaged in regulating, clearing, settling, processing information with respect to, and facilitating transactions in securities, to remove impediments to and perfect the mechanism of a free and open market and a national market system, and, in general, to protect investors and the public interest. Specifically, the proposed rule change will allow the Exchange to continue receiving inbound routes of orders from Arca Securities, acting in its capacity as a facility of affiliated exchanges, in a manner consistent with prior approvals and established protections. The Exchange believes that meeting the commitments established during the pilot program demonstrates that the Exchange has mechanisms that protect the independence of the Exchange's regulatory responsibility with respect to Arca Securities, as well as demonstrate that Arca Securities cannot use any information it may have because of its affiliation with the Exchange to its advantage.

B. Self-Regulatory Organization's Statement on Burden on Competition

The Exchange does not believe that the proposed rule change will impose any burden on competition that is not necessary or appropriate in furtherance of the purposes of the Act.

C. Self-Regulatory Organization's Statement on Comments on the Proposed Rule Change Received From Members, Participants, or Others

No written comments were solicited or received with respect to the proposed rule change.

III. Date of Effectiveness of the Proposed Rule Change and Timing for Commission Action

Within 45 days of the date of publication of this notice in the **Federal Register** or within such longer period (i) as the Commission may designate up to 90 days of such date if it finds such longer period to be appropriate and publishes its reasons for so finding or (ii) as to which the self-regulatory organization consents, the Commission will:

(A) By order approve or disapprove the proposed rule change, or

(B) Institute proceedings to determine whether the proposed rule change should be disapproved.

IV. Solicitation of Comments

Interested persons are invited to submit written data, views, and arguments concerning the foregoing, including whether the proposed rule change is consistent with the Act.

is similar to language that NASDAQ OMX BX, Inc. uses to describe its relationship with FINRA. *See* Securities Exchange Act Release No. 64896 (July 15, 2011), 76 FR 43740 (July 21, 2011) (SR–BX–2011–045).

[4] *See* NYSE Arca Equities Rule 7.45(a) and (b).

[5] *See* NYSE Arca Equities Rule 7.45(c); *see also* Securities Exchange Act Release No. 64730 (June 23, 2011) 76 FR 38235, 38236 nn. 4–8 (June 29, 2011) (SR–NYSEArca–2011–38) (listing prior approval orders for outbound and inbound pilots).

[6] *See* Securities Exchange Act Release No. 64042 (March 7, 2011), 76 FR 13440 (March 11, 2011) (SR–NYSEArca–2011–06) (extending pilot from March 31, 2011 to September 30, 2011).

[7] *See* SR–NYSEArca–2011–38, *supra* note 5, and Securities Exchange Act Release No. 64823 (July 6, 2011) 76 FR 40973 (July 12, 2011) (SR–NYSEArca–2011–42) (correcting rule number).

[8] As noted below, the Exchange proposes to change this provision to more accurately reflect the RSA with FINRA.

[9] *See* SR–NYSEArca-2011–38, *supra* note 5, and NYSE Arca Equities Rule 7.45(c)(1)(D).

[10] 15 U.S.C. 78f(b).

[11] 15 U.S.C. 78f(b)(5).

Comments may be submitted by any of the following methods:

Electronic Comments

- Use the Commission's Internet comment form (*http://www.sec.gov/rules/sro.shtml*); or
- Send an e-mail to *rule-comments@sec.gov.* Please include File Number SR–NYSEArca–2011–61 on the subject line.

Paper Comments

- Send paper comments in triplicate to Elizabeth M. Murphy, Secretary, Securities and Exchange Commission, 100 F Street, NE., Washington, DC 20549–1090.

All submissions should refer to File Number SR–NYSEArca–2011–61. This file number should be included on the subject line if e-mail is used. To help the Commission process and review your comments more efficiently, please use only one method. The Commission will post all comments on the Commission's Internet Web site (*http://www.sec.gov/rules/sro.shtml*). Copies of the submission, all subsequent amendments, all written statements with respect to the proposed rule change that are filed with the Commission, and all written communications relating to the proposed rule change between the Commission and any person, other than those that may be withheld from the public in accordance with the provisions of 5 U.S.C. 552, will be available for Web site viewing and printing in the Commission's Public Reference Room, 100 F Street, NE., Washington, DC 20549, on official business days between the hours of 10 a.m. and 3 p.m. Copies of such filing also will be available for inspection and copying at the principal office of the Exchange. All comments received will be posted without change; the Commission does not edit personal identifying information from submissions. You should submit only information that you wish to make publicly available. All submissions should refer to File Number SR–NYSEArca–2011–61 and should be submitted on or before September 16, 2011.

For the Commission, by the Division of Trading and Markets, pursuant to delegated authority.[12]

Elizabeth M. Murphy,

Secretary.

[FR Doc. 2011–21874 Filed 8–25–11; 8:45 am]

BILLING CODE P

[12] 17 CFR 200.30–3(a)(12).

SECURITIES AND EXCHANGE COMMISSION

[Release No. 34–65184; File No. SR–NYSEAmex–2011–63]

Self-Regulatory Organizations; NYSE Amex LLC; Notice of Filing of Proposed Rule Change Amending NYSE Amex Equities Rule 17(c)(2)(B) To Make Permanent the Pilot Program that Permits the Exchange To Accept Inbound Orders Routed by Archipelago Securities LLC in Its Capacity as a Facility of Affiliated Exchanges and To Clarify the NYSE Amex Equities Rule 17(c)(2)(A)(ii) To More Accurately Reflect the Regulatory Services Agreement Between the Exchange and the Financial Industry Regulatory Authority

August 22, 2011.

Pursuant to Section 19(b)(1) of the Securities Exchange Act of 1934 (''Act'')[1] and Rule 19b–4 thereunder,[2] notice is hereby given that on August 18, 2011, NYSE Amex LLC (''NYSE Amex'' or the ''Exchange'') filed with the Securities and Exchange Commission (''Commission'') the proposed rule change as described in Items I, II, and III below, which Items have been prepared by the Exchange. The Commission is publishing this notice to solicit comments on the proposed rule change from interested persons.

I. Self-Regulatory Organization's Statement of the Terms of Substance of the Proposed Rule Change

The Exchange proposes to amend NYSE Amex Equities Rule 17(c)(2)(B) to make permanent the pilot program that permits the Exchange to accept inbound orders routed by Archipelago Securities LLC (''Arca Securities'') in its capacity as a facility of affiliated exchanges (with the attendant obligations and conditions) and to clarify the text of NYSE Amex Equities Rule 17(c)(2)(A)(ii) to more accurately reflect the regulatory services agreement (''RSA'') between the Exchange and the Financial Industry Regulatory Authority (''FINRA''). The text of the proposed rule change is available at the Exchange, at the Exchange's Web site at *http://www.nyse.com*, at the Commission's Public Reference Room, and at the Commission's Web site at *http://www.sec.gov.*

[1] 15 U.S.C. 78s(b)(1).

[2] 17 CFR 240.19b–4.

II. Self-Regulatory Organization's Statement of the Purpose of, and Statutory Basis for, the Proposed Rule Change

In its filing with the Commission, the self-regulatory organization included statements concerning the purpose of, and basis for, the proposed rule change and discussed any comments it received on the proposed rule change. The text of those statements may be examined at the places specified in Item IV below. The Exchange has prepared summaries, set forth in sections A, B, and C below, of the most significant parts of such statements.

A. Self-Regulatory Organization's Statement of the Purpose of, and Statutory Basis for, the Proposed Rule Change

1. Purpose

The Exchange proposes to amend NYSE Amex Equities Rule 17(c)(2)(B) to make permanent the pilot program that permits the Exchange to accept inbound orders routed by Arca Securities in its capacity as a facility of affiliated exchanges (with the attendant obligations and conditions) and to clarify the text of NYSE Amex Equities Rule 17(c)(2)(A)(ii) to more accurately reflect the RSA between the Exchange and FINRA.[3]

Currently, Arca Securities is an approved outbound routing facility of the Exchange, providing outbound routing from the Exchange to other market centers.[4] The Exchange also has been previously approved to receive inbound routes of orders by Arca Securities in its capacity as an order routing facility of affiliated exchanges on a pilot basis until September 30, 2011.[5] On February 24, 2011, the Exchange filed an immediately effective proposal to extend the current pilot program until September 30, 2011.[6] On June 16, 2011, the Exchange filed an immediate effective proposal that codified the inbound routing authority

[3] The change to the rule text to more accurately reflect the RSA between the Exchange and FINRA is similar to language that NASDAQ OMX BX, Inc. uses to describe its relationship with FINRA. *See* Securities Exchange Act Release No. 64896 (July 15, 2011), 76 FR 43740 (July 21, 2011) (SR–BX–2011–045).

[4] *See* NYSE Amex Equities Rules 13 and 17(c)(1).

[5] *See* NYSE Amex Equities Rule 17(c)(2); *see also* Securities Exchange Act Release No. 64728 (June 23, 2011) 76 FR 38223 nn. 4–7 (June 29, 2011) (SR–NYSEAmex–2011–39) (listing prior approval orders for outbound and inbound pilots).

[6] *See* Securities Exchange Act Release No. 64014 (March 2, 2011), 76 FR 12773 (March 8, 2011) (SR–NYSEAmex–2011–10) (extending pilot from March 31, 2011 to September 30, 2011).

in NYSE Amex Equities Rule 17(c)(2).[7] The Exchange hereby seeks permanent approval to permit the Exchange to accept inbound orders that Arca Securities routes in its capacity as a facility of affiliated exchanges.

Under the pilot, the Exchange is committed to the following obligations and conditions:

- The Exchange will maintain an agreement pursuant to Rule 17d–2 under the Exchange Act with FINRA to relieve the Exchange of regulatory responsibilities for Arca Securities with respect to rules that are common rules between the Exchange and FINRA, and maintain an RSA with FINRA to perform regulatory responsibilities for Arca Securities for unique Exchange rules.
- The RSA will require the Exchange to provide FINRA with information, in an easily accessible manner, regarding all exception reports, alerts, complaints, trading errors, cancellations, investigations, and enforcement matters (collectively ''Exceptions'') in which Arca Securities is identified as a participant that has potentially violated Exchange or SEC Rules and of which the Exchange becomes aware, and shall require that FINRA provide a report, at least quarterly, to the Exchange quantifying all Exceptions in which Arca Securities is identified as a participant that has potentially violated Exchange or SEC Rules.[8]
- The Exchange, on behalf of its parent, NYSE Euronext, will establish and maintain procedures and internal controls reasonably designed to prevent Arca Securities from receiving any benefit, taking any action or engaging in any activity based on non-public information regarding planned changes to Exchange systems, obtained as a result of its affiliation with the Exchange, until such information is available generally to similarly situated member organizations of the Exchange in connection with the provision of inbound order routing to the Exchange.
- The Exchange may furnish to Arca Securities the same information on the same terms that the Exchange makes available in the normal course of business to any other member organization.[9]

The Exchange is in compliance with the above-listed obligations and conditions. In meeting them, the Exchange has set up mechanisms that protect the independence of the Exchange's regulatory responsibility with respect to Arca Securities, as well as demonstrate that Arca Securities cannot use any information it may have because of its affiliation with the Exchange to its advantage. Since the Exchange has met all the above-listed obligations and conditions, it now seeks permanent approval of the Exchange and Arca Securities' inbound routing relationship. The Exchange also proposes to clarify the text of NYSE Amex Equities Rule 17(c)(2)(A)(ii) to more accurately reflect the RSA between the Exchange and FINRA and specify that the quarterly report of Exceptions shall be provided to the Exchange's Chief Regulatory Officer. Upon approval of the proposed rule change, the Exchange will continue to comply with the obligations and conditions as set forth in proposed NYSE Amex Equities Rule 17(c)(2)(A).

2. Statutory Basis

The proposed rule change is consistent with Section 6(b)[10] of the Act, in general, and furthers the objectives of Section 6(b)(5),[11] in particular, in that the proposal is designed to prevent fraudulent and manipulative acts and practices, to promote just and equitable principles of trade, to foster cooperation and coordination with persons engaged in regulating, clearing, settling, processing information with respect to, and facilitating transactions in securities, to remove impediments to and perfect the mechanism of a free and open market and a national market system, and, in general, to protect investors and the public interest. Specifically, the proposed rule change will allow the Exchange to continue receiving inbound routes of orders from Arca Securities, acting in its capacity as a facility of affiliated exchanges, in a manner consistent with prior approvals and established protections. The Exchange believes that meeting the commitments established during the pilot program demonstrates that the Exchange has mechanisms that protect the independence of the Exchange's regulatory responsibility with respect to Arca Securities, as well as demonstrate that Arca Securities cannot use any information it may have because of its affiliation with the Exchange to its advantage.

B. Self-Regulatory Organization's Statement on Burden on Competition

The Exchange does not believe that the proposed rule change will impose any burden on competition that is not necessary or appropriate in furtherance of the purposes of the Act.

C. Self-Regulatory Organization's Statement on Comments on the Proposed Rule Change Received From Members, Participants, or Others

No written comments were solicited or received with respect to the proposed rule change.

III. Date of Effectiveness of the Proposed Rule Change and Timing for Commission Action

Within 45 days of the date of publication of this notice in the **Federal Register** or within such longer period (i) as the Commission may designate up to 90 days of such date if it finds such longer period to be appropriate and publishes its reasons for so finding or (ii) as to which the self-regulatory organization consents, the Commission will:

(A) By order approve or disapprove the proposed rule change, or

(B) Institute proceedings to determine whether the proposed rule change should be disapproved.

IV. Solicitation of Comments

Interested persons are invited to submit written data, views, and arguments concerning the foregoing, including whether the proposed rule change is consistent with the Act. Comments may be submitted by any of the following methods:

Electronic Comments

- Use the Commission's Internet comment form (*http://www.sec.gov/rules/sro.shtml*); or
- Send an e-mail to *rule-comments@sec.gov.* Please include File Number SR–NYSEAmex–2011–63 on the subject line.

Paper Comments

- Send paper comments in triplicate to Elizabeth M. Murphy, Secretary, Securities and Exchange Commission, 100 F Street, NE., Washington, DC 20549–1090.

All submissions should refer to File Number SR–NYSEAmex-2011–63. This file number should be included on the subject line if e-mail is used. To help the Commission process and review your comments more efficiently, please use only one method. The Commission will post all comments on the Commission's Internet Web site (*http://www.sec.gov/rules/sro.shtml*). Copies of the submission, all subsequent amendments, all written statements with respect to the proposed rule change that are filed with the

[7] *See* SR–NYSEAmex–2011–39, *supra* note 5.

[8] As noted below, the Exchange proposes to change this provision to more accurately reflect the RSA with FINRA.

[9] *See* SR–NYSEAmex–2011–39, *supra* note 5, and NYSE Amex Equities Rule 17(c)(2)(A)(iv).

[10] 15 U.S.C. 78f(b).

[11] 15 U.S.C. 78f(b)(5).

Commission, and all written communications relating to the proposed rule change between the Commission and any person, other than those that may be withheld from the public in accordance with the provisions of 5 U.S.C. 552, will be available for Web site viewing and printing in the Commission's Public Reference Room, 100 F Street, NE., Washington, DC 20549, on official business days between the hours of 10 a.m. and 3 p.m. Copies of such filing also will be available for inspection and copying at the principal office of the Exchange. All comments received will be posted without change; the Commission does not edit personal identifying information from submissions. You should submit only information that you wish to make publicly available. All submissions should refer to File Number SR–NYSEAmex-2011–63 and should be submitted on or beforeSeptember 16, 2011.

For the Commission, by the Division of Trading and Markets, pursuant to delegated authority.[12]

Elizabeth M. Murphy,

Secretary.

[FR Doc. 2011–21873 Filed 8–25–11; 8:45 am]

BILLING CODE 8011–01–P

SECURITIES AND EXCHANGE COMMISSION

[Release No. 34–65183; File No. SR–NYSE–2011–45]

Self-Regulatory Organizations; New York Stock Exchange LLC; Notice of Filing of Proposed Rule Change Amending NYSE Rule 17(c)(2)(B) To Make Permanent the Pilot Program That Permits the Exchange To Accept Inbound Orders Routed by Archipelago Securities LLC in Its Capacity as a Facility of Affiliated Exchanges and To Clarify the Text of NYSE Rule 17(c)(2)(A)(ii) To More Accurately Reflect the Regulatory Services Agreement Between the Exchange and the Financial Industry Regulatory Authority

August 22, 2011.

Pursuant to Section 19(b)(1) of the Securities Exchange Act of 1934 (''Act'')[1] and Rule 19b–4 thereunder,[2] notice is hereby given that on August 18, 2011, New York Stock Exchange LLC (''NYSE'' or the ''Exchange'') filed with the Securities and Exchange Commission (''Commission'') the proposed rule change as described in Items I, II, and III below, which Items have been prepared by the Exchange. The Commission is publishing this notice to solicit comments on the proposed rule change from interested persons.

I. Self-Regulatory Organization's Statement of the Terms of Substance of the Proposed Rule Change

The Exchange proposes to amend NYSE Rule 17(c)(2)(B) to make permanent the pilot program that permits the Exchange to accept inbound orders routed by Archipelago Securities LLC (''Arca Securities'') in its capacity as a facility of affiliated exchanges (with the attendant obligations and conditions) and to clarify the text of NYSE Rule 17(c)(2)(A)(ii) to more accurately reflect the regulatory services agreement (''RSA'') between the Exchange and the Financial Industry Regulatory Authority (''FINRA''). The text of the proposed rule change is available at the Exchange, at the Exchange's Web site at *http://www.nyse.com,* at the Commission's Public Reference Room, and at the Commission's Web site at *http://www.sec.gov.*

II. Self-Regulatory Organization's Statement of the Purpose of, and Statutory Basis for, the Proposed Rule Change

In its filing with the Commission, the self-regulatory organization included statements concerning the purpose of, and basis for, the proposed rule change and discussed any comments it received on the proposed rule change. The text of those statements may be examined at the places specified in Item IV below. The Exchange has prepared summaries, set forth in sections A, B, and C below, of the most significant parts of such statements.

A. Self-Regulatory Organization's Statement of the Purpose of, and Statutory Basis for, the Proposed Rule Change

1. Purpose

The Exchange proposes to amend NYSE Rule 17(c)(2)(B) to make permanent the pilot program that permits the Exchange to accept inbound orders routed by Arca Securities in its capacity as a facility of affiliated exchanges (with the attendant obligations and conditions) and to clarify the text of NYSE Rule 17(c)(2)(A)(ii) to more accurately reflect the RSA between the Exchange and FINRA.[3]

Currently, Arca Securities is an approved outbound routing facility of the Exchange, providing outbound routing from the Exchange to other market centers.[4] The Exchange also has been previously approved to receive inbound routes of orders by Arca Securities in its capacity as an order routing facility of affiliated exchanges on a pilot basis.[5] On February 24, 2011, the Exchange filed an immediately effective proposal to extend the current pilot program until September 30, 2011.[6] On June 16, 2011, the Exchange filed an immediate effective proposal that codified the inbound routing authority in NYSE Rule 17(c)(2).[7] The Exchange hereby seeks permanent approval to permit the Exchange to accept inbound orders that Arca Securities routes in its capacity as a facility of affiliated exchanges.

Under the pilot, the Exchange is committed to the following obligations and conditions:

- The Exchange will maintain an agreement pursuant to Rule 17d–2 under the Exchange Act with FINRA to relieve the Exchange of regulatory responsibilities for Arca Securities with respect to rules that are common rules between the Exchange and FINRA, and maintain an RSA with FINRA to perform regulatory responsibilities for Arca Securities for unique Exchange rules.
- The RSA will require the Exchange to provide FINRA with information, in an easily accessible manner, regarding all exception reports, alerts, complaints, trading errors, cancellations, investigations, and enforcement matters (collectively ''Exceptions'') in which Arca Securities is identified as a participant that has potentially violated Exchange or SEC Rules and of which the Exchange becomes aware, and shall require that FINRA provide a report, at least quarterly, to the Exchange quantifying all Exceptions in which Arca Securities is identified as a

[12] 17 CFR 200.30–3(a)(12).

[1] 15 U.S.C. 78s(b)(1).

[2] 17 CFR 240.19b–4.

[3] The change to the rule text to more accurately reflect the RSA between the Exchange and FINRA is similar to language that NASDAQ OMX BX, Inc. uses to describe its relationship with FINRA. *See* Securities Exchange Act Release No. 64896 (July 15, 2011), 76 FR 43740 (July 21, 2011) (SR–BX–2011–045).

[4] *See* NYSE Rules 13 and 17(c)(1).

[5] *See* NYSE Rule 17(c)(2); *see also* Securities Exchange Act Release No. 64729 (June 23, 2011) 76 FR 38232, 38233 nn. 4–9 (June 29, 2011) (SR–NYSE–2011–24) (listing prior approval orders for outbound and inbound pilots).

[6] *See* Securities Exchange Act Release No. 64013 (March 2, 2011), 76 FR 12774 (March 8, 2011) (SR–NYSE–2011–08) (extending pilot from March 31, 2011 to September 30, 2011).

[7] *See* SR–NYSE–2011–24, *supra* note 5.

participant that has potentially violated Exchange or SEC Rules.[8]

• The Exchange, on behalf of its parent, NYSE Euronext, will establish and maintain procedures and internal controls reasonably designed to prevent Arca Securities from receiving any benefit, taking any action or engaging in any activity based on non-public information regarding planned changes to Exchange systems, obtained as a result of its affiliation with the Exchange, until such information is available generally to similarly situated member organizations of the Exchange in connection with the provision of inbound order routing to the Exchange.

• The Exchange may furnish to Arca Securities the same information on the same terms that the Exchange makes available in the normal course of business to any other member organization.[9]

The Exchange is in compliance with the above-listed obligations and conditions. In meeting them, the Exchange has set up mechanisms that protect the independence of the Exchange's regulatory responsibility with respect to Arca Securities, as well as demonstrate that Arca Securities cannot use any information it may have because of its affiliation with the Exchange to its advantage. Since the Exchange has met all the above-listed obligations and conditions, it now seeks permanent approval of the Exchange and Arca Securities' inbound routing relationship. The Exchange also proposes to clarify the text of NYSE Rule 17(c)(2)(A)(ii) to more accurately reflect the RSA between the Exchange and FINRA and specify that the quarterly report of Exceptions shall be provided to the Exchange's Chief Regulatory Officer. Upon approval of the proposed rule change, the Exchange will continue to comply with the obligations and conditions as set forth in proposed NYSE Rule 17(c)(2)(A).

2. Statutory Basis

The proposed rule change is consistent with Section 6(b)[10] of the Act, in general, and furthers the objectives of Section 6(b)(5),[11] in particular, in that the proposal is designed to prevent fraudulent and manipulative acts and practices, to promote just and equitable principles of trade, to foster cooperation and coordination with persons engaged in regulating, clearing, settling, processing information with respect to, and facilitating transactions in securities, to remove impediments to and perfect the mechanism of a free and open market and a national market system, and, in general, to protect investors and the public interest. Specifically, the proposed rule change will allow the Exchange to continue receiving inbound routes of orders from Arca Securities, acting in its capacity as a facility of affiliated exchanges, in a manner consistent with prior approvals and established protections. The Exchange believes that meeting the commitments established during the pilot program demonstrates that the Exchange has mechanisms that protect the independence of the Exchange's regulatory responsibility with respect to Arca Securities, as well as demonstrate that Arca Securities cannot use any information it may have because of its affiliation with the Exchange to its advantage.

B. Self-Regulatory Organization's Statement on Burden on Competition

The Exchange does not believe that the proposed rule change will impose any burden on competition that is not necessary or appropriate in furtherance of the purposes of the Act.

C. Self-Regulatory Organization's Statement on Comments on the Proposed Rule Change Received From Members, Participants, or Others

No written comments were solicited or received with respect to the proposed rule change.

III. Date of Effectiveness of the Proposed Rule Change and Timing for Commission Action

Within 45 days of the date of publication of this notice in the **Federal Register** or within such longer period (i) as the Commission may designate up to 90 days of such date if it finds such longer period to be appropriate and publishes its reasons for so finding or (ii) as to which the self-regulatory organization consents, the Commission will:

(A) By order approve or disapprove the proposed rule change, or

(B) Institute proceedings to determine whether the proposed rule change should be disapproved.

IV. Solicitation of Comments

Interested persons are invited to submit written data, views, and arguments concerning the foregoing, including whether the proposed rule change is consistent with the Act. Comments may be submitted by any of the following methods:

Electronic Comments

• Use the Commission's Internet comment form (*http://www.sec.gov/rules/sro.shtml*); or

• Send an e-mail to *rule-comments@sec.gov.* Please include File Number SR–NYSE–2011–45 on the subject line.

Paper Comments

• Send paper comments in triplicate to Elizabeth M. Murphy, Secretary, Securities and Exchange Commission, 100 F Street, NE., Washington, DC 20549–1090.

All submissions should refer to File Number SR–NYSE–2011–45. This file number should be included on the subject line if e-mail is used. To help the Commission process and review your comments more efficiently, please use only one method. The Commission will post all comments on the Commission's Internet Web site (*http://www.sec.gov/rules/sro.shtml*). Copies of the submission, all subsequent amendments, all written statements with respect to the proposed rule change that are filed with the Commission, and all written communications relating to the proposed rule change between the Commission and any person, other than those that may be withheld from the public in accordance with the provisions of 5 U.S.C. 552, will be available for Web site viewing and printing in the Commission's Public Reference Room, 100 F Street, NE., Washington, DC 20549, on official business days between the hours of 10 a.m. and 3 p.m. Copies of such filing also will be available for inspection and copying at the principal office of the Exchange. All comments received will be posted without change; the Commission does not edit personal identifying information from submissions. You should submit only information that you wish to make publicly available. All submissions should refer to File Number SR–NYSE–2011–45 and should be submitted on or before September 16, 2011.

For the Commission, by the Division of Trading and Markets, pursuant to delegated authority.[12]

Elizabeth M. Murphy,

Secretary.

[FR Doc. 2011–21872 Filed 8–25–11; 8:45 am]

BILLING CODE 8011–01–P

[8] As noted below, the Exchange proposes to change this provision to more accurately reflect the RSA with FINRA.

[9] *See* SR–NYSE–2011–24, *supra* note 5, and NYSE Rule 17(c)(2)(A)(iv).

[10] 15 U.S.C. 78f(b).

[11] 15 U.S.C. 78f(b)(5).

[12] 17 CFR 200.30–3(a)(12).

SECURITIES AND EXCHANGE COMMISSION

[Release No. 34–65182; File No. SR–NYSEArca–2011–62]

Self-Regulatory Organizations; NYSE Arca, Inc.; Notice of Filing of Proposed Rule Change Amending NYSE Arca Options Rule 6.96(b)(2) To Make Permanent the Pilot Program That Permits the Exchange To Accept Inbound Orders Routed by Archipelago Securities LLC in its Capacity as a Facility of Affiliated Exchanges and To Clarify the Text of NYSE Arca Options Rule 6.96(b)(1)(B) To More Accurately Reflect the Regulatory Services Agreement between the Exchange and the Financial Industry Regulatory Authority

August 22, 2011.

Pursuant to Section 19(b)(1) of the Securities Exchange Act of 1934 (''Act'')[1] and Rule 19b–4 thereunder,[2] notice is hereby given that on August 18, 2011, NYSE Arca, Inc. (''NYSE Arca'' or the ''Exchange'') filed with the Securities and Exchange Commission (''Commission'') the proposed rule change as described in Items I, II, and III below, which Items have been prepared by the Exchange. The Commission is publishing this notice to solicit comments on the proposed rule change from interested persons.

I. Self-Regulatory Organization's Statement of the Terms of Substance of the Proposed Rule Change

The Exchange proposes to amend NYSE Arca Options Rule 6.96(b)(2) to make permanent the pilot program that permits the Exchange to accept inbound orders routed by Archipelago Securities LLC (''Arca Securities'') in its capacity as a facility of an affiliated exchange (with the attendant obligations and conditions) and to clarify the text of NYSE Arca Options Rule 6.96(b)(1)(B) to more accurately reflect the regulatory services agreement (''RSA'') between the Exchange and the Financial Industry Regulatory Authority (''FINRA''). The text of the proposed rule change is available at the Exchange, at the Exchange's Web site at *http://www.nyse.com,* at the Commission's Public Reference Room, and at the Commission's Web site at *http://www.sec.gov.*

[1] 15 U.S.C. 78s(b)(1).

[2] 17 CFR 240.19b–4.

II. Self-Regulatory Organization's Statement of the Purpose of, and Statutory Basis for, the Proposed Rule Change

In its filing with the Commission, the self-regulatory organization included statements concerning the purpose of, and basis for, the proposed rule change and discussed any comments it received on the proposed rule change. The text of those statements may be examined at the places specified in Item IV below. The Exchange has prepared summaries, set forth in sections A, B, and C below, of the most significant parts of such statements.

A. Self-Regulatory Organization's Statement of the Purpose of, and Statutory Basis for, the Proposed Rule Change

1. Purpose

The Exchange proposes to amend NYSE Arca Options Rule 6.96(b)(2) to make permanent the pilot program that permits the Exchange to accept inbound orders routed by Arca Securities in its capacity as a facility of an affiliated exchange (with the attendant obligations and conditions) and to clarify the text of NYSE Arca Options Rule 6.96(b)(1)(B) to more accurately reflect the RSA between the Exchange and FINRA.[3]

Currently, Arca Securities is an approved outbound routing facility of the Exchange, providing outbound routing from the Exchange to other market centers.[4] The Exchange also has been previously approved to receive inbound routes of orders by Arca Securities in its capacity as an order routing facility of an affiliated exchange on a pilot basis until September 30, 2011.[5] On June 16, 2011, the Exchange filed an immediate effective proposal that codified the inbound routing authority in NYSE Arca Options Rule 6.96(b).[6] The Exchange hereby seeks permanent approval to permit the Exchange to accept inbound orders that Arca Securities routes in its capacity as a facility of an affiliated exchange.

Under the pilot, the Exchange is committed to the following obligations and conditions:

[3] The change to the rule text to more accurately reflect the RSA between the Exchange and FINRA is similar to language that NASDAQ OMX BX, Inc. uses to describe its relationship with FINRA. *See* Securities Exchange Act Release No. 64896 (July 15, 2011), 76 FR 43740 (July 21, 2011) (SR–BX–2011–045).

[4] *See* NYSE Arca Options Rules 6.1A(15) and 6.96(a).

[5] *See* NYSE Arca Options Rule 6.96(b); *see also* Securities Exchange Act Release No. 64731 (June 23, 2011) 76 FR 38237 (June 29, 2011) (SR–NYSEArca–2011–39).

[6] *See* SR–NYSEArca–2011–39, *supra* note 5.

- The Exchange will maintain an agreement pursuant to Rule 17d–2 under the Exchange Act with FINRA to relieve the Exchange of regulatory responsibilities for Arca Securities with respect to rules that are common rules between the Exchange and FINRA, and maintain an RSA with FINRA to perform regulatory responsibilities for Arca Securities for unique Exchange rules.
- The RSA will require the Exchange to provide FINRA with information, in an easily accessible manner, regarding all exception reports, alerts, complaints, trading errors, cancellations, investigations, and enforcement matters (collectively ''Exceptions'') in which Arca Securities is identified as a participant that has potentially violated Exchange or SEC Rules and of which the Exchange becomes aware, and shall require that FINRA provide a report, at least quarterly, to the Exchange quantifying all Exceptions in which Arca Securities is identified as a participant that has potentially violated Exchange or SEC Rules.[7]
- The Exchange, on behalf of its parent, NYSE Euronext, will establish and maintain procedures and internal controls reasonably designed to prevent Arca Securities from receiving any benefit, taking any action or engaging in any activity based on non-public information regarding planned changes to Exchange systems, obtained as a result of its affiliation with the Exchange, until such information is available generally to similarly situated OTP Holders of the Exchange in connection with the provision of inbound order routing to the Exchange.
- The Exchange may furnish to Arca Securities the same information on the same terms that the Exchange makes available in the normal course of business to any other OTP Holder.[8]

The Exchange is in compliance with the above-listed obligations and conditions. In meeting them, the Exchange has set up mechanisms that protect the independence of the Exchange's regulatory responsibility with respect to Arca Securities, as well as demonstrate that Arca Securities cannot use any information it may have because of its affiliation with the Exchange to its advantage. Since the Exchange has met all the above-listed obligations and conditions, it now seeks permanent approval of the Exchange and Arca Securities' inbound routing

[7] As noted below, the Exchange proposes to change this provision to more accurately reflect the RSA with FINRA.

[8] *See* SR–NYSEArca–2011–39, *supra* note 5, and NYSE Arca Options Rule 6.96(b)(1)(D).

relationship. The Exchange also proposes to clarify the text of NYSE Arca Options Rule 6.96(b)(1)(B) to more accurately reflect the RSA between the Exchange and FINRA and specify that the quarterly report of Exceptions shall be provided to the Exchange's Chief Regulatory Officer. Upon approval of the proposed rule change, the Exchange will continue to comply with the obligations and conditions as set forth in proposed NYSE Arca Options Rule 6.96(b).

2. Statutory Basis

The proposed rule change is consistent with Section 6(b) [9] of the Act, in general, and furthers the objectives of Section 6(b)(5),[10] in particular, in that the proposal is designed to prevent fraudulent and manipulative acts and practices, to promote just and equitable principles of trade, to foster cooperation and coordination with persons engaged in regulating, clearing, settling, processing information with respect to, and facilitating transactions in securities, to remove impediments to and perfect the mechanism of a free and open market and a national market system, and, in general, to protect investors and the public interest. Specifically, the proposed rule change will allow the Exchange to continue receiving inbound routes of orders from Arca Securities, acting in its capacity as a facility of an affiliated exchange, in a manner consistent with prior approvals and established protections. The Exchange believes that meeting the commitments established during the pilot program demonstrates that the Exchange has mechanisms that protect the independence of the Exchange's regulatory responsibility with respect to Arca Securities, as well as demonstrate that Arca Securities cannot use any information it may have because of its affiliation with the Exchange to its advantage.

B. Self-Regulatory Organization's Statement on Burden on Competition

The Exchange does not believe that the proposed rule change will impose any burden on competition that is not necessary or appropriate in furtherance of the purposes of the Act.

C. Self-Regulatory Organization's Statement on Comments on the Proposed Rule Change Received From Members, Participants, or Others

No written comments were solicited or received with respect to the proposed rule change.

[9] 15 U.S.C. 78f(b).

[10] 15 U.S.C. 78f(b)(5).

III. Date of Effectiveness of the Proposed Rule Change and Timing for Commission Action

Within 45 days of the date of publication of this notice in the **Federal Register** or within such longer period (i) as the Commission may designate up to 90 days of such date if it finds such longer period to be appropriate and publishes its reasons for so finding or (ii) as to which the self-regulatory organization consents, the Commission will:

(A) By order approve or disapprove the proposed rule change, or

(B) Institute proceedings to determine whether the proposed rule change should be disapproved.

IV. Solicitation of Comments

Interested persons are invited to submit written data, views, and arguments concerning the foregoing, including whether the proposed rule change is consistent with the Act. Comments may be submitted by any of the following methods:

Electronic Comments

- Use the Commission's Internet comment form (*http://www.sec.gov/rules/sro.shtml*); or
- Send an e-mail to *rule-comments@sec.gov*. Please include File Number SR–NYSEArca–2011–62 on the subject line.

Paper Comments

- Send paper comments in triplicate to Elizabeth M. Murphy, Secretary, Securities and Exchange Commission, 100 F Street, NE., Washington, DC 20549–1090.

All submissions should refer to File Number SR–NYSEArca–2011–62. This file number should be included on the subject line if e-mail is used. To help the Commission process and review your comments more efficiently, please use only one method. The Commission will post all comments on the Commission's Internet Web site (*http://www.sec.gov/rules/sro.shtml*). Copies of the submission, all subsequent amendments, all written statements with respect to the proposed rule change that are filed with the Commission, and all written communications relating to the proposed rule change between the Commission and any person, other than those that may be withheld from the public in accordance with the provisions of 5 U.S.C. 552, will be available for Web site viewing and printing in the Commission's Public Reference Room, 100 F Street, NE., Washington, DC 20549, on official business days between the hours of 10 a.m. and 3 p.m. Copies of such filing also will be available for inspection and copying at the principal office of the Exchange. All comments received will be posted without change; the Commission does not edit personal identifying information from submissions. You should submit only information that you wish to make publicly available. All submissions should refer to File Number SR–NYSEArca–2011–62 and should be submitted on or before September 16, 2011.

For the Commission, by the Division of Trading and Markets, pursuant to delegated authority.[11]

Elizabeth M. Murphy,

Secretary.

[FR Doc. 2011–21871 Filed 8–25–11; 8:45 am]

BILLING CODE 8011–01–P

SECURITIES AND EXCHANGE COMMISSION

[Release No. 34–65181; File No. SR–NYSEAmex–2011–64]

Self-Regulatory Organizations; NYSE Amex LLC; Notice of Filing of Proposed Rule Change Amending NYSE Amex Options Rule 993NY(b)(2) To Make Permanent the Pilot Program That Permits the Exchange To Accept Inbound Orders Routed by Archipelago Securities LLC in Its Capacity as a Facility of Affiliated Exchanges and To Clarify the Text of NYSE Amex Options Rule 993NY(b)(1)(B) To More Accurately Reflect the Regulatory Services Agreement Between the Exchange and the Financial Industry Regulatory Authority

August 22, 2011.

Pursuant to Section 19(b)(1) of the Securities Exchange Act of 1934 (''Act'') [1] and Rule 19b–4 thereunder,[2] notice is hereby given that on August 18, 2011, NYSE Amex LLC (''NYSE Amex'' or the ''Exchange'') filed with the Securities and Exchange Commission (''Commission'') the proposed rule change as described in Items I, II, and III below, which Items have been prepared by the Exchange. The Commission is publishing this notice to solicit comments on the proposed rule change from interested persons.

[11] 17 CFR 200.30–3(a)(12).

[1] 15 U.S.C. 78s(b)(1).

[2] 17 CFR 240.19b–4.

I. Self-Regulatory Organization's Statement of the Terms of Substance of the Proposed Rule Change

The Exchange proposes to amend NYSE Amex Options Rule 993NY(b)(2) to make permanent the pilot program that permits the Exchange to accept inbound orders routed by Archipelago Securities LLC (''Arca Securities'') in its capacity as a facility of an affiliated exchange (with the attendant obligations and conditions) and to clarify the text of NYSE Amex Options Rule 993NY(b)(1)(B) to more accurately reflect the regulatory services agreement (''RSA'') between the Exchange and the Financial Industry Regulatory Authority (''FINRA''). The text of the proposed rule change is available at the Exchange, at the Exchange's Web site at *http://www.nyse.com,* at the Commission's Public Reference Room, and at the Commission's Web site at *http://www.sec.gov*.

II. Self-Regulatory Organization's Statement of the Purpose of, and Statutory Basis for, the Proposed Rule Change

In its filing with the Commission, the self-regulatory organization included statements concerning the purpose of, and basis for, the proposed rule change and discussed any comments it received on the proposed rule change. The text of those statements may be examined at the places specified in Item IV below. The Exchange has prepared summaries, set forth in sections A, B, and C below, of the most significant parts of such statements.

A. Self-Regulatory Organization's Statement of the Purpose of, and Statutory Basis for, the Proposed Rule Change

1. Purpose

The Exchange proposes to amend NYSE Amex Options Rule 993NY(b)(2) to make permanent the pilot program that permits the Exchange to accept inbound orders routed by Arca Securities in its capacity as a facility of an affiliated exchange (with the attendant obligations and conditions) and to clarify the text of NYSE Amex Options Rule 993NY(b)(1)(B) to more accurately reflect the RSA between the Exchange and FINRA.[3]

Currently, Arca Securities is an approved outbound routing facility of the Exchange, providing outbound routing from the Exchange to other market centers.[4] The Exchange also has been previously approved to receive inbound routes of orders by Arca Securities in its capacity as an order routing facility of an affiliated exchange on a pilot basis until September 30, 2011.[5] On June 16, 2011, the Exchange filed an immediate effective proposal that codified the inbound routing authority in NYSE Amex Options Rule 993NY(b).[6] The Exchange hereby seeks permanent approval to permit the Exchange to accept inbound orders that Arca Securities routes in its capacity as a facility of an affiliated exchange.

Under the pilot, the Exchange is committed to the following obligations and conditions:

- The Exchange will maintain an agreement pursuant to Rule 17d–2 under the Exchange Act with FINRA to relieve the Exchange of regulatory responsibilities for Arca Securities with respect to rules that are common rules between the Exchange and FINRA, and maintain an RSA with FINRA to perform regulatory responsibilities for Arca Securities for unique Exchange rules.
- The RSA will require the Exchange to provide FINRA with information, in an easily accessible manner, regarding all exception reports, alerts, complaints, trading errors, cancellations, investigations, and enforcement matters (collectively ''Exceptions'') in which Arca Securities is identified as a participant that has potentially violated Exchange or SEC Rules and of which the Exchange becomes aware, and shall require that FINRA provide a report, at least quarterly, to the Exchange quantifying all Exceptions in which Arca Securities is identified as a participant that has potentially violated Exchange or SEC Rules.[7]
- The Exchange, on behalf of its parent, NYSE Euronext, will establish and maintain procedures and internal controls reasonably designed to prevent Arca Securities from receiving any benefit, taking any action or engaging in any activity based on non-public information regarding planned changes to Exchange systems, obtained as a result of its affiliation with the Exchange, until such information is available generally to similarly situated ATP Holders of the Exchange in connection with the provision of inbound order routing to the Exchange.
- The Exchange may furnish to Arca Securities the same information on the same terms that the Exchange makes available in the normal course of business to any other ATP Holder.[8]

The Exchange is in compliance with the above-listed obligations and conditions. In meeting them, the Exchange has set up mechanisms that protect the independence of the Exchange's regulatory responsibility with respect to Arca Securities, as well as demonstrate that Arca Securities cannot use any information it may have because of its affiliation with the Exchange to its advantage. Since the Exchange has met all the above-listed obligations and conditions, it now seeks permanent approval of the Exchange and Arca Securities' inbound routing relationship. The Exchange also proposes to clarify the text of NYSE Amex Options Rule 993NY(b)(1)(B) to more accurately reflect the RSA between the Exchange and FINRA and specify that the quarterly report of Exceptions shall be provided to the Exchange's Chief Regulatory Officer. Upon approval of the proposed rule change, the Exchange will continue to comply with the obligations and conditions as set forth in proposed NYSE Amex Options Rule 993NY(b)(1).

2. Statutory Basis

The proposed rule change is consistent with Section 6(b)[9] of the Act, in general, and furthers the objectives of Section 6(b)(5),[10] in particular, in that the proposal is designed to prevent fraudulent and manipulative acts and practices, to promote just and equitable principles of trade, to foster cooperation and coordination with persons engaged in regulating, clearing, settling, processing information with respect to, and facilitating transactions in securities, to remove impediments to and perfect the mechanism of a free and open market and a national market system, and, in general, to protect investors and the public interest. Specifically, the proposed rule change will allow the Exchange to continue receiving inbound routes of orders from Arca Securities, acting in its capacity as a facility of an affiliated exchange, in a manner consistent with prior approvals and established protections. The Exchange believes that meeting the

[3] The change to the rule text to more accurately reflect the RSA between the Exchange and FINRA is similar to language that NASDAQ OMX BX, Inc. uses to describe its relationship with FINRA. *See* Securities Exchange Act Release No. 64896 (July 15, 2011), 76 FR 43740 (July 21, 2011) (SR–BX–2011–045).

[4] *See* NYSE Amex Options Rules 900.2NY(69) and 993NY(a).

[5] *See* NYSE Amex Options Rule 993NY(b); *see also* Securities Exchange Act Release No. 64732 (June 23, 2011) 76 FR 38240 (June 29, 2011) (SR–NYSEAmex–2011–40).

[6] *See* SR–NYSEAmex–2011–40, *supra* note 5.

[7] As noted below, the Exchange proposes to change this provision to more accurately reflect the RSA with FINRA.

[8] *See* SR–NYSEAmex–2011–40, *supra* note 5, and NYSE Amex Options Rule 993NY(b)(1)(D).

[9] 15 U.S.C. 78f(b).

[10] 15 U.S.C. 78f(b)(5).

commitments established during the pilot program demonstrates that the Exchange has mechanisms that protect the independence of the Exchange's regulatory responsibility with respect to Arca Securities, as well as demonstrate that Arca Securities cannot use any information it may have because of its affiliation with the Exchange to its advantage.

B. Self-Regulatory Organization's Statement on Burden on Competition

The Exchange does not believe that the proposed rule change will impose any burden on competition that is not necessary or appropriate in furtherance of the purposes of the Act.

C. Self-Regulatory Organization's Statement on Comments on the Proposed Rule Change Received From Members, Participants, or Others

No written comments were solicited or received with respect to the proposed rule change.

III. Date of Effectiveness of the Proposed Rule Change and Timing for Commission Action

Within 45 days of the date of publication of this notice in the **Federal Register** or within such longer period (i) as the Commission may designate up to 90 days of such date if it finds such longer period to be appropriate and publishes its reasons for so finding or (ii) as to which the self-regulatory organization consents, the Commission will:

(A) By order approve or disapprove the proposed rule change, or

(B) Institute proceedings to determine whether the proposed rule change should be disapproved.

IV. Solicitation of Comments

Interested persons are invited to submit written data, views, and arguments concerning the foregoing, including whether the proposed rule change is consistent with the Act. Comments may be submitted by any of the following methods:

Electronic Comments

- Use the Commission's Internet comment form (*http://www.sec.gov/rules/sro.shtml*); or
- Send an e-mail to *rule-comments@sec.gov*. Please include File Number SR–NYSEAmex–2011–64 on the subject line.

Paper Comments

- Send paper comments in triplicate to Elizabeth M. Murphy, Secretary, Securities and Exchange Commission, 100 F Street, NE., Washington, DC 20549–1090.

All submissions should refer to File Number SR–NYSEAmex–2011–64. This file number should be included on the subject line if e-mail is used. To help the Commission process and review your comments more efficiently, please use only one method. The Commission will post all comments on the Commission's Internet Web site (*http://www.sec.gov/rules/sro.shtml*). Copies of the submission, all subsequent amendments, all written statements with respect to the proposed rule change that are filed with the Commission, and all written communications relating to the proposed rule change between the Commission and any person, other than those that may be withheld from the public in accordance with the provisions of 5 U.S.C. 552, will be available for Web site viewing and printing in the Commission's Public Reference Room, 100 F Street, NE., Washington, DC 20549, on official business days between the hours of 10 a.m. and 3 p.m. Copies of such filing also will be available for inspection and copying at the principal office of the Exchange. All comments received will be posted without change; the Commission does not edit personal identifying information from submissions. You should submit only information that you wish to make publicly available. All submissions should refer to File Number SR–NYSEAmex–2011–64 and should be submitted on or before September 16, 2011.

For the Commission, by the Division of Trading and Markets, pursuant to delegated authority.[11]

Elizabeth M. Murphy,

Secretary.

[FR Doc. 2011–21870 Filed 8–25–11; 8:45 am]

BILLING CODE 8011–01–P

[11] 17 CFR 200.30–3(a)(12).

SECURITIES AND EXCHANGE COMMISSION

[Release No. 34–65176; File No. SR–NASDAQ–2011–117]

Self-Regulatory Organizations; The NASDAQ Stock Market LLC; Notice of Filing and Immediate Effectiveness of Proposed Rule Change To Extend the Pilot Period of Rule 4753(c)

August 19, 2011.

Pursuant to Section 19(b)(1) of the Securities Exchange Act of 1934 (''Act''),[1] and Rule 19b–4 thereunder,[2] notice is hereby given that on August 12, 2011, The NASDAQ Stock Market LLC (the ''Exchange'' or ''NASDAQ''), filed with the Securities and Exchange Commission (''Commission'') the proposed rule change as described in Items I and II below, which Items have been prepared by NASDAQ. The Commission is publishing this notice to solicit comments on the proposed rule change from interested persons.

[1] 15 U.S.C. 78s(b)(1).

[2] 17 CFR 240.19b–4.

I. Self-Regulatory Organization's Statement of the Terms of Substance of the Proposed Rule Change

NASDAQ proposes to extend the pilot period of Rule 4753(c), NASDAQ's ''Volatility Guard,'' so that the pilot will now expire on the earlier of January 31, 2012 or the date on which, if approved, a limit up/limit down mechanism to address extraordinary market volatility, is approved.

The text of the proposed rule change is below. Proposed new language is italicized; proposed deletions are in brackets.

* * * * *

4753. Nasdaq Halt and Imbalance Crosses

(a)–(b) No change.

(c) For a pilot period ending *the earlier of January 31, 2012 or the date on which, if approved, a limit up/limit down mechanism to address extraordinary market volatility, is approved* [six months after the date of Commission approval of SR–NASDAQ–2010–074], between 9:45 a.m. and 3:35 p.m. EST, the System will automatically monitor System executions to determine whether the market is trading in an orderly fashion and whether to conduct an Imbalance Cross in order to restore an orderly market in a single Nasdaq Security.

(1) An Imbalance Cross shall occur if the System executes a transaction in a Nasdaq Security at a price that is beyond the Threshold Range away from the Triggering Price for that security. The Triggering Price for each Nasdaq Security shall be the price of any execution by the System in that security within the prior 30 seconds. The Threshold Range shall be determined as follows:

Execution price	Threshold range away from triggering price (percent)
$1.75 and under	15
Over $1.75 and up to $25	10
Over $25 and up to $50	5
Over $50	3

(2) If the System determines pursuant to subsection (1) above to conduct an Imbalance Cross in a Nasdaq Security, the System shall automatically cease executing trades in that security for a 60-second Display Only Period. During that 60-second Display Only Period, the System shall:

(A) Maintain all current quotes and orders and continue to accept quotes and orders in that System Security; and

(B) Disseminate by electronic means an Order Imbalance Indicator every 5 seconds.

(3) At the conclusion of the 60-second Display Only Period, the System shall re-open the market by executing the Nasdaq Halt Cross as set forth in subsection (b)(2)–(4) above.

(4) If the opening price established by the Nasdaq Halt Cross pursuant to subsection (b)(2)(A)–(D) above is outside the benchmarks established by Nasdaq by a threshold amount, the Nasdaq Halt Cross will occur at the price within the threshold amounts that best satisfies the conditions of subparagraphs (b)(2)(A) through (D) above. Nasdaq management shall set and modify such benchmarks and thresholds from time to time upon prior notice to market participants.

(d) No change.

* * * * *

II. Self-Regulatory Organization's Statement of the Purpose of, and Statutory Basis for, the Proposed Rule Change

In its filing with the Commission, NASDAQ included statements concerning the purpose of and basis for the proposed rule change and discussed any comments it received on the proposed rule change. The text of these statements may be examined at the places specified in Item IV below. NASDAQ has prepared summaries, set forth in Sections A, B, and C below, of the most significant aspects of such statements.

A. Self-Regulatory Organization's Statement of the Purpose of, and the Statutory Basis for, the Proposed Rule Change

1. Purpose

NASDAQ is proposing to extend the operative period of the pilot under Rule 4753(c), NASDAQ's ''Volatility Guard,'' so that it will expire the earlier of January 31, 2012 or the date on which, if approved, a limit up/limit down mechanism to address extraordinary market volatility, is approved, yet hold the implementation of Rule 4753(c) in abeyance until that point.

On March 11, 2011, the Commission approved Rule 4753(c) (the ''Volatility Guard''), a volatility-based pause in trading in individual NASDAQ-listed securities traded on NASDAQ (''NASDAQ Securities''), as a six month pilot applied to the NASDAQ 100 Index securities.[3] The Volatility Guard automatically suspends trading in individual NASDAQ Securities that are the subject of abrupt and significant intraday price movements between 9:30 a.m. and 4 p.m. Eastern Standard Time (''EST''), which was subsequently amended to 9:45 a.m. and 3:35 p.m. EST to avoid potential interference with the opening and closing crosses.[4] Volatility Guard is triggered automatically when the execution price of a pilot security moves more than a fixed amount away from a pre-established ''triggering price'' for that security. The triggering price for each pilot security is the price of any execution by the system in that security within the previous 30 seconds. For each pilot security, the system continually compares the price of each execution in the system against the prices of all system executions in that security over the 30 seconds. Once triggered, NASDAQ institutes a formal trading halt during which time NASDAQ systems are prohibited from executing orders. Members, however, may continue to enter quotes and orders, which are queued during a 60-second Display Only Period. At the conclusion of the Display Only Period, the queued orders are executed at a single price, pursuant to NASDAQ's Halt Cross mechanism.[5]

NASDAQ determined to adopt Volatility Guard as a six month pilot in response to the unprecedented aberrant volatility witnessed on May 6, 2010, and the limited effect that NASDAQ's market collars had in dampening such volatility. NASDAQ believed that the Rule 4753(c) halt process was needed to protect its listed securities and market participants from such volatility in the future. In proposing the six month pilot, NASDAQ noted that another market had adopted a process whereby the market's listed securities each may be temporarily removed from automatic trading when the trading exceeds certain average daily volume-, price-, and volatility-based criteria. Accordingly, NASDAQ believed that adopting its own process would serve to protect its market from aberrant volatility, like that experienced on May 6, 2011.

During the time that the Volatility Guard pilot was progressing through the notice and comment process with the Commission, NASDAQ together with the other national securities exchanges and FINRA (''SROs'') and in consultation with the Commission, worked diligently to implement changes to the markets to prevent another event like May 6, 2010 from occurring. In this regard, the SROs have expanded their existing circuit breaker pilots[6] to cover all NMS stocks,[7] clarified rules concerning clearly erroneous processes,[8] and have made great strides in developing a limit up/limit down system to replace the circuit breakers currently in place. With respect to this last effort, on April 5, 2011, the SROs filed with the Commission a national market system plan to address extraordinary market volatility, which proposed a market-wide limit up/limit down system applicable to all NMS stocks (the ''Plan'').[9] The period to submit comments on the Plan ended on June 22, 2011, and the Commission stated that it will determine whether to approve it shortly after the expiration of the comment period.[10] The SROs propose implementing the Plan 120 calendar days following the publication of the Commission's order approving the proposed Plan in the **Federal Register**.

Important to the implementation of Volatility Guard, NASDAQ notes that

[3] *See* Securities Exchange Act Release No. 64071 (March 11, 2011), 76 FR 14699 (March 17, 2011) (SR–NASDAQ–2010–074). Amendment 1 to SR–NASDAQ–2010–074 designated the NASDAQ 100 Index as the 100 pilot securities.

[4] *See* Securities Exchange Act Release No. 64268 (April 8, 2011), 76 FR 20742 (April 15, 2011) (SR–NASDAQ–2011–051).

[5] The Nasdaq Halt Cross is ''the process for determining the price at which Eligible Interest shall be executed at the open of trading for a halted security and for executing that Eligible Interest.'' *See* Nasdaq Rule 4753(a)(3).

[6] On June 10, 2010, the Commission approved the Circuit Breaker Pilot, which instituted new circuit breaker rules that pause trading for five minutes in a security included in the S&P 500 Index if its price moves ten percent or more over a five-minute period. *See* Securities Exchange Act Release Nos. 62251 (June 10, 2010), 75 FR 34183 (June 16, 2010) (SR–FINRA–2010–025); 62252 (June 10, 2010), 75 FR 34186 (June 16, 2010) (SR–NASDAQ–2010–061, *et al.*). On September 10, 2010, the Circuit Breaker Pilot was expanded to include securities in the Russell 1000 Index and certain exchange-traded products. *See* Securities Exchange Act Release Nos. 62883 (September 10, 2010), 75 FR 56608 (September 16, 2010) (SR–FINRA–2010–033); 62884 (September 10, 2010), 75 FR 56618 (September 16, 2010) (SR–NASDAQ–2010–079, *et al.*). The Circuit Breaker Pilot is scheduled to expire on August 11, 2011. *See e.g.*, Securities Exchange Act Release No. 64174 (April 4, 2011), 76 FR 19819 (April 8, 2011) (SR–NASDAQ–2011–042).

[7] On June 23, 2011, the Commission granted accelerated approval to SRO proposals to expand the Circuit Breaker Pilot to all NMS securities. *See* Securities Exchange Act Release No. 64735 (June 23, 2011), 76 FR 38243 (June 29, 2011) (SR–NASDAQ–2011–067, *et al.*). The term ''NMS stocks'' is defined in Rule 600(b)(47) of Regulation NMS under the Act. *See* 17 CFR 242.600(b)(47).

[8] *See* Securities Exchange Act Release No. 62886 (September 10, 2010), 75 FR 56613 (September 16, 2010) (SR–NASDAQ–2010–076, *et al.*); *see also* Securities Exchange Act Release No. 64238 (April 7, 2011), 76 FR 20780 (April 13, 2011) (SR–NASDAQ–2011–043).

[9] *See* Securities Exchange Act Release No. 64547 (May 25, 2011), 76 FR 31647 (June 1, 2011) (File No. 4–631).

[10] *See http://www.sec.gov/news/press/2011/2011–84.htm.* NASDAQ understands that, given the number of comments received, the Commission will need a reasonable time to consider the comments provided. Rule 608(b) of Regulation NMS governs the effectiveness of national market system plans. *See* 17 CFR 242.608.

the Commission stated that it may find exchange-specific volatility moderators inconsistent with the Act once a uniform, cross-market mechanism to address aberrant volatility is adopted. In approving Volatility Guard, the Commission emphasized:

> [T]hat it is continuing to work diligently with the exchanges and FINRA to develop an appropriate consistent cross-market mechanism to moderate excessive volatility that could be applied widely to individual exchange-listed securities and to address commenters' concerns regarding the complexity and potential confusion of exchange-specific volatility moderators. To the extent the Commission approves such a mechanism, whether it be an expanded circuit breaker with a limit up/limit down feature or otherwise, *the Commission may no longer be able to find that exchange-specific volatility moderators—including both Nasdaq's Volatility Guard and the NYSE's LRPs—are consistent with the Act.*[11]

NASDAQ calculates that the Plan, if approved, may be implemented by the end of 2011 or early 2012.[12] It is against this backdrop that NASDAQ is seeking to extend the pilot period of Volatility Guard.

NASDAQ believes that a limit up/limit down system, as proposed in the Plan, would be preferable to disparate individual market solutions to aberrant volatility. Given the progress made toward adopting a uniform limit up/limit down system and the Commission's statement that exchange-specific volatility moderators be abandoned once a consistent cross-market mechanism is adopted, NASDAQ believes that implementing Volatility Guard at this time may be confusing and onerous to market participants.

NASDAQ is proposing to extend the pilot rather than eliminate it so that NASDAQ may continue to have the option to implement Volatility Guard should the Plan not be approved. As a primary market, NASDAQ takes seriously its responsibility to both its listed companies and the investing public. NASDAQ continues to believe that an individual solution like Volatility Guard, may be necessary in the event the Plan is not approved, much like NYSE-listed stocks may be protected by the LRP mechanism if it remains in place. NASDAQ believes that extending the Volatility Guard pilot, but holding its implementation in abeyance until such time that the Plan is approved will best serve these groups by allowing NASDAQ to retain the ability to implement Volatility Guard if necessary, while also allowing market participants to make preparations in light of the limit up/limit down system, as proposed in the Plan. As such, market participants will not needlessly expend energy changing, and testing, their systems to account for the Volatility Guard pilot in addition to the changes required to implement the Plan.

Accordingly, NASDAQ is proposing to extend the Volatility Guard pilot to the earlier of January 31, 2012 or the date on which, if approved, a limit up/limit down mechanism to address extraordinary market volatility, is approved. Should the Plan not be adopted by the expiration of the pilot, NASDAQ may consider further extension of Volatility Guard, consistent with the extension proposed herein.

2. Statutory Basis

NASDAQ believes that the proposed rule change is consistent with the provisions of Section 6 of the Act,[13] in general and with Sections 6(b)(5) of the Act,[14] in particular in that it is designed to prevent fraudulent and manipulative acts and practices, to promote just and equitable principles of trade, to foster cooperation and coordination with persons engaged in regulating, clearing, settling, processing information with respect to, and facilitating transactions in securities, to remove impediments to and perfect the mechanism of a free and open market and a national market system, and, in general, to protect investors and the public interest. NASDAQ believes that the proposed rule continues to meet these requirements in that it promotes the adoption of the Plan's uniform, cross-market limit up/limit down process to address aberrant volatility, while also allowing NASDAQ to retain an important alternative tool to deal with such volatility should approval of the Plan be delayed.

B. Self-Regulatory Organization's Statement on Burden on Competition

NASDAQ does not believe that the proposed rule change will result in any burden on competition that is not necessary or appropriate in furtherance of the purposes of the Act, as amended.

C. Self-Regulatory Organization's Statement on Comments on the Proposed Rule Change Received From Members, Participants, or Others

Written comments were neither solicited nor received.

III. Date of Effectiveness of the Proposed Rule Change and Timing for Commission Action

The Exchange has filed the proposed rule change pursuant to Section 19(b)(3)(A)(iii) of the Act[15] and Rule 19b–4(f)(6) thereunder.[16] Because the proposed rule change does not: (i) Significantly affect the protection of investors or the public interest; (ii) impose any significant burden on competition; and (iii) become operative prior to 30 days from the date on which it was filed, or such shorter time as the Commission may designate, if consistent with the protection of investors and the public interest, the proposed rule change has become effective pursuant to Section 19(b)(3)(A) of the Act[17] and Rule 19b–4(f)(6)(iii) thereunder.[18]

At any time within 60 days of the filing of the proposed rule change, the Commission summarily may temporarily suspend such rule change if it appears to the Commission that such action is necessary or appropriate in the public interest, for the protection of investors, or otherwise in furtherance of the purposes of the Act.

IV. Solicitation of Comments

Interested persons are invited to submit written data, views, and arguments concerning the foregoing, including whether the proposed rule change is consistent with the Act. Comments may be submitted by any of the following methods:

Electronic Comments

- Use the Commission's Internet comment form (*http://www.sec.gov/rules/sro.shtml*); or
- Send an e-mail to *rule-comments@sec.gov.* Please include File No. SR–NASDAQ–2011–117 on the subject line.

Paper Comments

- Send paper comments in triplicate to Elizabeth M. Murphy, Secretary, Securities and Exchange Commission, 100 F Street, NE., Washington, DC 20549–1090.

All submissions should refer to File No. SR–NASDAQ–2011–117. This file

[11] *See* Securities Exchange Act Release No. 64071 (March 11, 2011), 76 FR 14699, at 14701 (March 17, 2011) (SR–NASDAQ–2010–074, as amended) (*emphasis added*).

[12] *Supra* note 9.

[13] 15 U.S.C. 78f.

[14] 15 U.S.C. 78f(b)(5).

[15] 15 U.S.C. 78s(b)(3)(A)(iii).

[16] 17 CFR 240.19b–4(f)(6).

[17] 15 U.S.C. 78s(b)(3)(A).

[18] 17 CFR 240.19b–4(f)(6). In addition, Rule 19b–4(f)(6)(iii) requires the Exchange to give the Commission written notice of the Exchange's intent to file the proposed rule change along with a brief description and text of the proposed rule change, at least five business days prior to the date of filing of the proposed rule change, or such shorter time as designated by the Commission. The Exchange has satisfied this requirement.

number should be included on the subject line if e-mail is used. To help the Commission process and review your comments more efficiently, please use only one method. The Commission will post all comments on the Commission's Internet Web site (*http://www.sec.gov/rules/sro.shtml*). Copies of the submission, all subsequent amendments, all written statements with respect to the proposed rule change that are filed with the Commission, and all written communications relating to the proposed rule change between the Commission and any person, other than those that may be withheld from the public in accordance with the provisions of 5 U.S.C. 552, will be available for Web site viewing and printing in the Commission's Public Reference Room, 100 F Street, NE., Washington, DC 20549, on official business days between the hours of 10 a.m. and 3 p.m. Copies of such filing also will be available for inspection and copying at the principal office of the Exchange. All comments received will be posted without change; the Commission does not edit personal identifying information from submissions. You should submit only information that you wish to make available publicly. All submissions should refer to File No. SR–NASDAQ–2011–117 and should be submitted on or before September 16, 2011.

For the Commission, by the Division of Trading and Markets, pursuant to delegated authority.[19]

Elizabeth M. Murphy,

Secretary.

[FR Doc. 2011–21855 Filed 8–25–11; 8:45 am]

BILLING CODE 8011–01–P

SECURITIES AND EXCHANGE COMMISSION

[Release No. 34–65180; File No. SR–NASDAQ–2011–111]

Self-Regulatory Organizations; The NASDAQ Stock Market LLC; Notice of Filing and Immediate Effectiveness of Proposed Rule Change Relating to Access Services Fees

August 22, 2011.

Pursuant to Section 19(b)(1) of the Securities Exchange Act of 1934 (''Act''),[1] and Rule 19b–4 thereunder,[2] notice is hereby given that on August 10, 2011, The NASDAQ Stock Market LLC (''NASDAQ'' or ''Exchange'') filed with the Securities and Exchange Commission (''Commission'') the proposed rule change as described in Items I, II, and III below, which Items have been prepared by the Exchange. The Commission is publishing this notice to solicit comments on the proposed rule change from interested persons.

I. Self-Regulatory Organization's Statement of the Terms of Substance of the Proposed Rule Change

The Exchange proposes to modify Exchange Rule 7053, entitled ''NASDAQ Options Market—Access Services,'' related to fees governing pricing for NASDAQ members using the NASDAQ Options Market (''NOM''), NASDAQ's facility for executing and routing standardized equity and index options.

While fee changes pursuant to this proposal are effective upon filing, the Exchange has designated these changes to be operative on August 26, 2011.

The text of the proposed rule change is set forth below. Proposed new text is in italics and deleted text is in brackets.

7053. NASDAQ Options Market—Access Services

Part A: The following charges are assessed by Nasdaq for connectivity to the NASDAQ Options Market [.]*for NOM 1.0:*

(a) Financial Information Exchange (FIX)

Ports	Quantity	Price
FIX Trading Port	First 25 ports	$500/port/month.
	Additional ports above 25	$250/port/month.
FIX Port for Services Other than Trading	First 25 ports	$500/port/month.
	Additional ports above 25	$250/port/month.

(b) TradeInfo

• Members not subscribing to the Nasdaq Workstation using TradeInfo will be charged a fee of $95 per user per month.

(c) Other Port Fees

The following port fees shall apply in connection with the use of other trading telecommunication protocols:

First 25 ports	$500 per month for each port pair.
Additional ports above 25	$250 per month for each port pair.

Part B: The following charges are assessed by Nasdaq for connectivity to the NASDAQ Options Market for NOM 2.0 as of August 26, 2011 through September 30, 2011:

(a) TradeInfo

• Members not subscribing to the Nasdaq Workstation using TradeInfo will be charged a fee of $95 per user per month.

(b) Port Fees, per port per month, as follows:

Order Entry Port Fee	*$0.00*
CTI Port Fee	*$0.00*
OTTO Port Fee	*$0.00*
ITTO Port Fee	*$0.00*
Order Entry DROP Port Fee	*$0.00*
OTTO DROP Port Fee	*$0.00*
SQF Port Fee	*$0.00*

Part C: The following charges are assessed by Nasdaq for connectivity to the NASDAQ Options Market as of October 3, 2011:*

(a) TradeInfo

• *Members not subscribing to the Nasdaq Workstation using TradeInfo will be charged a fee of $95 per user per month.*

(b) Port Fees, per port per month, as follows:

Order Entry Port Fee	*$500.00*
CTI Port Fee	*$500.00*
OTTO Port Fee	*$500.00*
ITTO Port Fee	*$500.00*
Order Entry DROP Port Fee	*$500.00*
OTTO DROP Port Fee	*$500.00*
SQF Port Fee	*$0.00*

** As of October 3, 2011, the fees in Parts A and B shall no longer apply. All NOM Participants will be assessed the fees in Part C.*

The text of the proposed rule change is available on the Exchange's Web site at *http://www.nasdaq.cchwallstreet.com*, at the principal office of the Exchange, and at the Commission's Public Reference Room.

II. Self-Regulatory Organization's Statement of the Purpose of, and Statutory Basis for, the Proposed Rule Change

In its filing with the Commission, the Exchange included statements concerning the purpose of and basis for the proposed rule change and discussed any comments it received on the proposed rule change. The text of these statements may be examined at the places specified in Item IV below. The

[19] 17 CFR 200.30–3(a)(12).

[1] 15 U.S.C. 78s(b)(1).

[2] 17 CFR 240.19b–4.

Exchange has prepared summaries, set forth in sections A, B, and C below, of the most significant aspects of such statements.

A. Self-Regulatory Organization's Statement of the Purpose of, and Statutory Basis for, the Proposed Rule Change

1. Purpose

NASDAQ is proposing to amend Exchange Rule 7053, titled NASDAQ Options Market—Access Services. Specifically, the Exchange proposes to amend the fees applicable to NOM Participants in connection with several trading system enhancements. The Exchange proposes to establish Access Services Fees for NOM Participants dependent on whether NOM Participants are utilizing the current platform or the enhanced platform as of August 26, 2011. The Exchange also proposes the implementation of new Access Services Fees for all NOM Participants as of October 3, 2011, at which time all NOM Participants will have been required to transition to the new trading platform. The proposed fees are intended to incentivize NOM Participants to quickly transition to the new trading platform prior to October 3, 2011.[3]

By way of background, several enhancements will be made to the current NOM platform (''NOM 1.0'') which will benefit NOM Participants and their customers. The implementation of the enhancements will be referred to as NOM 2.0. The transition will begin on August 26, 2011. There will be additional enhancements available to NOM Participants with NOM 2.0.[4] The Exchange proposes to divide Exchange Rule 7053 into three parts.

First, the Exchange proposes to continue assessing NOM Participants utilizing the current NOM platform or NOM 1.0, the current fees in Exchange Rule 7053 until October 3, 2011. The Exchange proposes to add a reference in Exchange Rule 7053 to title the current pricing as ''Part A'' and add a sentence indicating this pricing is applicable to NOM 1.0 Participants.

Second, the Exchange also proposes to add a ''Part B'' to Exchange Rule 7053, applicable to NOM Participants who have connected to NOM 2.0. Certain fees will be waived for NOM 2.0 Participants. The port fees, which are listed in proposed Part B, section (b) of Exchange Rule 7053 and described below, will be waived for NOM 2.0 Participants who have connected to NOM 2.0 between August 26, 2011 and September 30, 2011.[5] The TradeInfo Fee, described below, will not be waived for NOM Participants who have connected to NOM 2.0.

Third, the Exchange proposes to add a ''Part C'' to Exchange Rule 7053, which will be applicable to all NOM Participants as of October 3, 2011. The Exchange will require that all NOM Participants convert to NOM 2.0 prior to October 3, 2011.

Currently Rule 7053 contains fees assessed by Nasdaq for connectivity to NOM. Access Services Fees relate to ports used to: enter orders into the NASDAQ trading systems; receive market data; and enter quotes. The Exchange currently assesses the following tiered Financial Information Exchange (''FIX'')[6] fees:

Ports	Quantity	Price
FIX Trading Port	First 25 ports	$500/port/month.
	Additional ports above 25	$250/port/month.
FIX Port for Services Other than Trading	First 25 ports	$500/port/month.
	Additional ports above 25	$250/port/month.

NOM Participants are currently assessed a $95 per user per month TradeInfo[7] Fee if they are not subscribing to the Nasdaq Workstation.

Finally, the Exchange currently assesses Other Ports the following tiered fees:

Quantity	Price
First 25 ports	$500 per month for each port pair.
Additional ports above 25.	$250 per month for each port pair.

The Exchange will continue to assess NOM Participants these above fees for connectivity to NOM 1.0. Beginning August 26, 2011, any NOM Participant with connectivity to NOM 2.0 will not be assessed fees for ports in Part B, section (b), as these port fees will be waived through September 30, 2011.[8] NOM Participants connected to NOM 2.0 will continue to be subject to the TradeInfo Fee, which will continue to be assessed regardless of whether the NOM Participant is connected to NOM 1.0 or NOM 2.0. If a NOM Participant is connected to both NOM 1.0 and NOM 2.0, the NOM Participant will be assessed the applicable current fees, which are listed in Part A, including the TradeInfo Fee, if applicable. All other fees related to NOM 2.0 will be waived through September 30, 2011. A NOM Participant connected to NOM 1.0 and NOM 2.0 will only be assessed a $95 per user per month TradeInfo Fee, if applicable.

As of October 3, 2011, the Exchange will assess new Access Services Fees and will discontinue the fees in Parts A and B, with the exception of the TradeInfo Fee which will continue to be assessed to all NOM Participants. The Exchange lists these new proposed fees, which are per port per month, in Part C, section (b) of Exchange Rule 7053. The Exchange also proposes to add text to Part C of Exchange Rule 7053 to indicate that as of October 3, 2011, only the fees in Part C are applicable to all NOM Participants.

As of October 3, 2011, the Exchange is proposing to assess the following per port per month Access Services Fees: (i)

[3] NOM Participants will be required to set up an account number with the Membership Department in order to transition. Testing will also be available as of August 6, 2011. Technical specifications are available on the Exchange's Web site.

[4] Among other things, NOM 2.0 intends to provide, subject to Commission approval where applicable, the following: (i) An advanced market making interface with a common interface on NOM and NASDAQ OMX PHLX LLC (an option exchange operated by NASDAQ OMX) to provide risk monitor functionality; (ii) an Acceptable Trade Range price protection feature; (iii) an Order Price Protection feature; (iv) ITCH to Trade Options and Best of NASDAQ Options data feeds; (v) FIX interface; (vi) a daily open order report; (vii) support for All-or-None orders; (viii) a cancel/replace feature of an order from DAY to GTC; and (ix) support for Good Til time TIF.

[5] The SQF Port Fee has no charge.

[6] FIX is a protocol used by NOM market participants for order entry, modification and cancellation and message transmittal.

[7] TradeInfo allows users to scan for their NASDAQ-listed orders submitted in NASDAQ. Users can then perform actions on their orders. Users can scan for all orders in a particular security or all orders of a particular type, regardless of their status (open, canceled, executed, etc.). For example, after scanning for open orders the user is then able to select an open order and is allowed to make corrections to the order or cancel the order. TradeInfo also allows the users to scan other orders, such as executed, cancelled, broken, rejected and suspended orders.

[8] The SQF Port Fee has no charge.

Order Entry Port Fee [9] of $500; (ii) Clearing Trade Interface (''CTI'') [10] Port Fee of $500; (iii) OUCH to Trade Options (''OTTO'') [11] Port Fee of $500; (iv) ITCH to Trade Options (''ITTO'') [12] Port Fee of $500; (v) Order Entry Delivery of real-time execution information (''DROP'') [13] Port Fee of $500; (vi) OTTO DROP Port Fee [14] of $500; and (vii) Specialized Quote Feed (''SQF'') Port Fee [15] of $0.00. The Exchange will also continue to assess the TradeInfo Fee.

While fee changes pursuant to this proposal are effective upon filing, the Exchange has designated these changes to be operative on August 26, 2011.

2. Statutory Basis

NASDAQ believes that its proposal to amend its schedule of fees is consistent with Section 6(b) of the Act [16] in general, and furthers the objectives of Section 6(b)(4) of the Act [17] in particular, in that it is an equitable allocation of reasonable fees and other charges among Exchange members and other persons using any facility or system which NASDAQ operates or controls.

The Exchange believes the proposed amendments to Exchange Rule 7053 to waive certain Access Service Fees for a period of time to encourage NOM Participants to transition to NOM 2.0 is both reasonable and equitable. The Exchange believes that the waiver is reasonable because it will lower costs for NOM Participants who connect early and will not impact any NOM Participants who do not desire to connect until a later time. The Exchange also believes it is reasonable to allow NOM Participants a period of time to complete the transition before amending the Access Service Fees. All NOM Participants will be provided an opportunity to transition once NOM 2.0 is launched on August 26, 2011.

The Exchange believes the new Access Service Fees that will be in place on October 3, 2011 are reasonable because the fees are within the range of port fees that are assessed today by NOM. The Exchange believes that the port fees, for which the Exchange is assessing NOM Participants as of October 3, 2011, are equitable because they are being uniformly applied to all NOM Participants.

With respect to the SQF Port Fee, for which there is no charge, the Exchange believes this fee is reasonable because the Exchange is seeking to incentivize market makers to connect to NOM 2.0.[18] The Exchange believes not assessing a fee for the SQF Port, as compared to other ports, is just and equitable because market makers have obligations to the market and regulatory requirements,[19] which normally do not apply to other market participants.

Finally, the Exchange believes that continuing to assess the TradeInfo Fee on all NOM Participants, regardless of the transition from NOM 1.0 to NOM 2.0, is reasonable because this functionality is not impacted by the NOM 2.0 transition and it is reasonable to continue assessing the same fee for this service. The Exchange believes continuing to assess the TradeInfo Fee on all NOM Participants, regardless of the transition from NOM 1.0 to NOM 2.0, is equitable because all NOM Participants are uniformly assessed this fee.

B. Self-Regulatory Organization's Statement on Burden on Competition

The Exchange does not believe that the proposed rule change will impose any burden on competition not necessary or appropriate in furtherance of the purposes of the Act.

C. Self-Regulatory Organization's Statement on Comments on the Proposed Rule Change Received From Members, Participants, or Others

No written comments were either solicited or received.

III. Date of Effectiveness of the Proposed Rule Change and Timing for Commission Action

The foregoing rule change has become effective pursuant to Section 19(b)(3)(A)(ii) of the Act [20] and paragraph (f)(2) of Rule 19b–4 [21] thereunder. At any time within 60 days of the filing of the proposed rule change, the Commission summarily may temporarily suspend such rule change if it appears to the Commission that such action is necessary or appropriate in the public interest, for the protection of investors, or otherwise in furtherance of the purposes of the Act.

IV. Solicitation of Comments

Interested persons are invited to submit written data, views, and arguments concerning the foregoing, including whether the proposed rule change is consistent with the Act. Comments may be submitted by any of the following methods:

Electronic Comments

- Use the Commission's Internet comment form (*http://www.sec.gov/rules/sro.shtml*); or
- Send an e-mail to *rule-comments@sec.gov.* Please include File Number SR–NASDAQ–2011–111 on the subject line.

Paper Comments

- Send paper comments in triplicate to Elizabeth M. Murphy, Secretary,

[9] The Order Entry Port Fee is a connectivity fee in connection with routing orders to the Exchange via an external order entry port. NOM Participants access the Exchange's network through order entry ports. A NOM Participant may have more than one order entry port. In NOM 1.0, this port was referred to as FIX.

[10] CTI offers real-time clearing trade updates. A real-time clearing trade update is a message that is sent to a member after an execution has occurred and contains trade details. The message containing the trade details is also simultaneously sent to the The Options Clearing Corporation. The trade messages are routed to a member's connection containing certain information. The administrative and market event messages include, but are not limited to: system event messages to communicate operational-related events; options directory messages to relay basic option symbol and contract information for options traded on the Exchange; complex strategy messages to relay information for those strategies traded on the Exchange; trading action messages to inform market participants when a specific option or strategy is halted or released for trading on the Exchange; and an indicator which distinguishes electronic and non-electronically delivered orders.

[11] OTTO provides a method for subscribers to send orders and receive status updates on those orders. OTTO accepts limit orders from system subscribers, and if there is a matching order, the orders will execute. Non-matching orders are added to the limit order book, a database of available limit orders, where they are matched in price-time priority.

[12] The ITTO data feed will contain all quote and order messages including all executions. This feed allows subscribers to track the full depth of the NOM quote and order book.

[13] The DROP interface provides real time information regarding orders sent to NOM and executions that occurred on NOM. The DROP interface is not a trading interface and does not accept order messages.

[14] The OTTO DROP data feed will provide real-time information regarding orders entered through OTTO and the execution of those orders. The OTTO DROP data feed is not a trading interface and does not accept order messages.

[15] SQF ports are ports that receive inbound quotes at any time within that month. The SQF Port allows a NOM Participant to access, information such as execution reports and other relevant data through a single feed. For example, this data would show which symbols are trading on NOM and the current state of an options symbol (*i.e.,* open for trading, trading, halted or closed). Auction notifications and execution reports are also available.

[16] 15 U.S.C. 78f(b).

[17] 15 U.S.C. 78f(b)(4).

[18] The SQF Port can only be utilized by market makers.

[19] Pursuant to Chapter VII (Market Participants), Section 5 (Obligations of Market Makers), in registering as a market maker, an Options Participant commits himself to various obligations. Transactions of a Market Maker in its market making capacity must constitute a course of dealings reasonably calculated to contribute to the maintenance of a fair and orderly market, and Market Makers should not make bids or offers or enter into transactions that are inconsistent with such course of dealings. Further, all Market Makers are designated as specialists on NOM for all purposes under the Act or rules thereunder. *See* Chapter VII, Section 5.

[20] 15 U.S.C. 78s(b)(3)(A)(ii).

[21] 17 CFR 240.19b–4(f)(2).

Securities and Exchange Commission, 100 F Street, NE., Washington, DC 20549–1090.

All submissions should refer to File Number SR–NASDAQ–2011–111. This file number should be included on the subject line if e-mail is used. To help the Commission process and review your comments more efficiently, please use only one method. The Commission will post all comments on the Commission's Internet Web site (*http://www.sec.gov/rules/sro.shtml*). Copies of the submission, all subsequent amendments, all written statements with respect to the proposed rule change that are filed with the Commission, and all written communications relating to the proposed rule change between the Commission and any person, other than those that may be withheld from the public in accordance with the provisions of 5 U.S.C. 552, will be available for Web site viewing and printing in the Commission's Public Reference Room, 100 F Street, NE., Washington, DC 20549, on official business days between the hours of 10 a.m. and 3 p.m. Copies of the filing also will be available for inspection and copying at the principal office of the Exchange. All comments received will be posted without change; the Commission does not edit personal identifying information from submissions. You should submit only information that you wish to make available publicly. All submissions should refer to File Number SR–NASDAQ–2011–111 and should be submitted on or before September 16, 2011.

For the Commission, by the Division of Trading and Markets, pursuant to delegated authority.[22]

Elizabeth M. Murphy,

Secretary.

[FR Doc. 2011–21856 Filed 8–25–11; 8:45 am]

BILLING CODE 8011–01–P

[22] 17 CFR 200.30–3(a)(12).

DEPARTMENT OF STATE

[Public Notice: 7568]

Culturally Significant Objects Imported for Exhibition Determinations: ''Once Upon Many Times: Legends and Myths in Himalayan Art''

SUMMARY: Notice is hereby given of the following determinations: Pursuant to the authority vested in me by the Act of October 19, 1965 (79 Stat. 985; 22 U.S.C. 2459), Executive Order 12047 of March 27, 1978, the Foreign Affairs Reform and Restructuring Act of 1998 (112 Stat. 2681, *et seq.;* 22 U.S.C. 6501 note, *et seq.*), Delegation of Authority No. 234 of October 1, 1999, Delegation of Authority No. 236–3 of August 28, 2000 (and, as appropriate, Delegation of Authority No. 257 of April 15, 2003), I hereby determine that the objects to be included in the exhibition ''Once Upon Many Times: Legends and Myths in Himalayan Art,'' imported from abroad for temporary exhibition within the United States, are of cultural significance. The objects are imported pursuant to loan agreements with the foreign owners or custodians. I also determine that the exhibition or display of the exhibit objects at the Rubin Museum of Art, New York, NY, from on or about September 16, 2011, until on or about January 30, 2012, and at possible additional exhibitions or venues yet to be determined, is in the national interest. I have ordered that Public Notice of these Determinations be published in the **Federal Register**.

FOR FURTHER INFORMATION CONTACT: For further information, including a list of the exhibit objects, contact Julie Simpson, Attorney-Adviser, Office of the Legal Adviser, U.S. Department of State (telephone: 202–632–6467). The mailing address is U.S. Department of State, SA–5, L/PD, Fifth Floor (Suite 5H03), Washington, DC 20522–0505.

Dated: August 19, 2011.

J. Adam Ereli,

Principal Deputy Assistant Secretary, Bureau of Educational and Cultural Affairs, Department of State.

[FR Doc. 2011–21925 Filed 8–25–11; 8:45 am]

BILLING CODE 4710–05–P

DEPARTMENT OF STATE

[Public Notice: 7566]

Culturally Significant Objects Imported for Exhibition Determinations: ''Mirror of the Buddha: Early Portraits From Tibet''

SUMMARY: Notice is hereby given of the following determinations: Pursuant to the authority vested in me by the Act of October 19, 1965 (79 Stat. 985; 22 U.S.C. 2459), Executive Order 12047 of March 27, 1978, the Foreign Affairs Reform and Restructuring Act of 1998 (112 Stat. 2681, *et seq.;* 22 U.S.C. 6501 note, *et seq.*), Delegation of Authority No. 234 of October 1, 1999, Delegation of Authority No. 236–3 of August 28, 2000 (and, as appropriate, Delegation of Authority No. 257 of April 15, 2003), I hereby determine that the objects to be included in the exhibition ''Mirror of the Buddha: Early Portraits from Tibet,'' imported from abroad for temporary exhibition within the United States, are of cultural significance. The objects are imported pursuant to loan agreements with the foreign owners or custodians. I also determine that the exhibition or display of the exhibit objects at the Rubin Museum of Art, New York, NY, from on or about October 21, 2011, until on or about March 5, 2012, and at possible additional exhibitions or venues yet to be determined, is in the national interest. I have ordered that Public Notice of these Determinations be published in the **Federal Register**.

FOR FURTHER INFORMATION CONTACT: For further information, including a list of the exhibit objects, contact Julie Simpson, Attorney-Adviser, Office of the Legal Adviser, U.S. Department of State (telephone: 202–632–6467). The mailing address is U.S. Department of State, SA–5, L/PD, Fifth Floor (Suite 5H03), Washington, DC 20522–0505.

Dated: August 19, 2011.

J. Adam Ereli,

Principal Deputy Assistant Secretary, Bureau of Educational and Cultural Affairs, Department of State.

[FR Doc. 2011–21928 Filed 8–25–11; 8:45 am]

BILLING CODE 4710–05–P

DEPARTMENT OF STATE

[Public Notice: 7567]

Culturally Significant Objects Imported for Exhibition Determinations: ''Light Years: Conceptual Art and the Photograph, 1964–1977''

SUMMARY: Notice is hereby given of the following determinations: Pursuant to the authority vested in me by the Act of October 19, 1965 (79 Stat. 985; 22 U.S.C. 2459), Executive Order 12047 of March 27, 1978, the Foreign Affairs Reform and Restructuring Act of 1998 (112 Stat. 2681, *et seq.;* 22 U.S.C. 6501 note, *et seq.*), Delegation of Authority No. 234 of October 1, 1999, Delegation of Authority No. 236–3 of August 28, 2000 (and, as appropriate, Delegation of Authority No. 257 of April 15, 2003), I hereby determine that the objects to be included in the exhibition ''Light Years: Conceptual Art and the Photograph, 1964–1977,'' imported from abroad for temporary exhibition within the United States, are of cultural significance. The objects are imported pursuant to loan agreements with the foreign owners or custodians. I also determine that the exhibition or display of the exhibit objects at the Art Institute of Chicago, Chicago, IL, from on or about December 11, 2011, until on or about March 11, 2012, and at possible additional

exhibitions or venues yet to be determined, is in the national interest. I have ordered that Public Notice of these Determinations be published in the **Federal Register**.

FOR FURTHER INFORMATION CONTACT: For further information, including a list of the exhibit objects, contact Julie Simpson, Attorney-Adviser, Office of the Legal Adviser, U.S. Department of State (telephone: 202–632–6467). The mailing address is U.S. Department of State, SA–5, L/PD, Fifth Floor (Suite 5H03), Washington, DC 20522–0505.

Dated: August 19, 2011.

J. Adam Ereli,

Principal Deputy Assistant Secretary, Bureau of Educational and Cultural Affairs, Department of State.

[FR Doc. 2011–21926 Filed 8–25–11; 8:45 am]

BILLING CODE 4710–05–P

DEPARTMENT OF STATE

[Public Notice: 7569]

Final Environmental Impact Statement for the Proposed Keystone XL Project; Public Meetings

AGENCY: Department of State.

ACTION: Notice of Public Meetings following the final Environmental Impact Statement for the Proposed Keystone XL Project.

SUMMARY: Following the release of the final Environmental Impact Statement for the proposed Keystone XL pipeline, Executive Order 13337 calls on the Secretary of State, or her designee, to determine if issuance of a Presidential Permit to the applicant would serve the national interest. This decision on the application will take into account a wide range of factors, including environmental, economic, energy security, foreign policy, and pipeline safety concerns. No decision will be made until the completion of this thorough review process. The Department expects to make a decision on whether to grant or deny the Permit before the end of the year.

If built, the Keystone XL pipeline would carry crude oil from Canada and from U.S. oil fields in North Dakota and Montana to refineries primarily on the Gulf Coast of the United States. As part of the review and analysis of the national interest, the U.S. Department of State will hold a series of public meetings, and provide other opportunities for the public to comment on the project. Along with other factors listed above, these comments will be considered in the final decision. Meetings will be held at the following dates, locations and times (all meeting times are local time):

Monday, September 26, 2011

Bob Bowers Civic Center, 3401 Cultural Center Drive, Port Arthur, Texas 77642, 4:30 p.m.–10 p.m.

Kansas Expo Center, 1 Expocenter Drive, Topeka, Kansas 66612, 12 p.m.–3:30 p.m., 4 p.m.–8 p.m.

Tuesday, September 27, 2011

Dawson Community College, Toepke Center Auditorium, 300 Community Drive, Glendive, Montana 59330, 4:30 p.m.–10 p.m.

Pershing Center, 226 Centennial Mall South, Lincoln, Nebraska 68508, 12 p.m.–3:30 p.m., 4 p.m.–8 p.m.

Wednesday, September 28, 2011

University of Texas, Lady Bird Johnson Auditorium, 2313 Red River Street, Austin, Texas 78705, 12 p.m.–3:30 p.m., 4 p.m.–8 p.m.

Thursday, September 29, 2011

Best Western Ramkota, 920 West Sioux Avenue, Pierre, South Dakota 57501, 12 p.m. –3:30 p.m., 4 p.m.–8 p.m.

West Holt High School, 100 N. Main Street, Atkinson, Nebraska 68713, 4:30 p.m.– 10 p.m.

Friday, September 30, 2011

Reed Center Exhibition Hall, 5800 Will Rogers Road, Midwest City, Oklahoma 73110, 12 p.m.–3:30 p.m., 4 p.m.–8 p.m.

Friday, October 7, 2011

Washington, District of Columbia, To Be Announced via Web site and public notice.

Procedures for Public Meetings

Speakers: All members of the public are welcome to attend the meetings and state their comments for the administrative record. Persons who want to speak at the meeting will need to sign up in person at the entrance of the meeting venue and be given a number. The order of speakers will be determined on a first-come, first-served basis, according to the sign-up sheet. Those wishing to speak must be present when their name or number is called or they will forfeit their time.

Comments: Remarks made at the meetings will be recorded, transcribed, and entered into the administrative record for the State Department's consideration of the proposed Keystone XL pipeline. Each speaker will be allowed 3–5 minutes to make remarks, depending on the number of people who sign up to speak. Speakers will be asked to state their name and any organization with which they are affiliated.

Depending on attendance, it may not be possible for all those who sign up to have the opportunity to speak. The State Department encourages individuals who do not have the opportunity to speak or who are unable to complete their comments in the allotted time to submit comments on the national interest determination in written form. A State Department official will be available to accept written comments, and a summary of all comments will be incorporated in the record of decision for the proposed Keystone XL pipeline. The Department will also accept written comments on the national interest determination beginning on the date the final Environmental Impact Statement is issued. In order to ensure that comments are processed and considered before the decision is made on the permit application, all comments must be submitted by midnight on October 9, 2011.

Purpose: These meetings are an opportunity for the public to express views on all aspects of the proposed Keystone XL pipeline. Participants are encouraged to recount information illustrating their view about whether the issuance of a Presidential Permit for the Keystone XL pipeline project is in the U.S. national interest.

Presiding Officer: The meetings will be chaired by a senior official from the U.S. Department of State. At the beginning of the meeting, the presiding officer will explain the status of the application for the permit and the Department's process for making a decision on the Permit, but will not answer questions. The presiding officer or an assistant will announce the name of each speaker from the sign-up list.

Protocol: We ask attendees to respect the meeting procedures in order to ensure a constructive information gathering session. No signs or banners will be allowed inside the meeting venue. The presiding officer will use his/her discretion to conduct the meeting in an orderly manner.

FOR FURTHER INFORMATION CONTACT: A comprehensive description of the proposed Project and up-to-date information regarding the public meetings are available at *http://www.keystonepipeline-xl.state.gov.* The final Environmental Impact Statement, including a summary of public comments received during two prior public comment periods, will also be available online.

Comments can be submitted by the following methods: online at *http://www.keystonepipeline-xl.state.gov;* e-

mail at *keystonexl-nid@cardno.com*; fax at 206–269–0098; or mailed to the following address:

Alexander Yuan, Keystone XL EIS Project, P.O. Box 96503–98500, Washington, DC 20090–6503.

As noted above, in order for comments to be considered they must be submitted by midnight on October 9, 2011.

Media Contacts: Please contact Wendy Nassmacher at 202–647–6664 or via e-mail at *NassmacherWL@state.gov.*

Issued in Washington, DC, on August 26, 2010.

Dated: August 23, 2011.

John E. Thompson,

Acting Director, Bureau of Oceans and International Environmental and Scientific Affairs/Office of Environmental Policy, U.S. Department of State.

[FR Doc. 2011–21939 Filed 8–25–11; 8:45 am]

BILLING CODE 4710–09–P

SUSQUEHANNA RIVER BASIN COMMISSION

Projects Approved for Consumptive Uses of Water

AGENCY: Susquehanna River Basin Commission.

ACTION: Notice.

SUMMARY: This notice lists the projects approved by rule by the Susquehanna River Basin Commission during the period set forth in **DATES**.

DATES: July 1, 2011, through July 31, 2011.

ADDRESSES: Susquehanna River Basin Commission, 1721 North Front Street, Harrisburg, PA 17102–2391.

FOR FURTHER INFORMATION CONTACT: Richard A. Cairo, General Counsel, telephone: (717) 238–0423, ext. 306; fax: (717) 238–2436; e-mail: *rcairo@srbc.net* or Stephanie L. Richardson, Secretary to the Commission, telephone: (717) 238–0423, ext. 304; fax: (717) 238–2436; e-mail: *srichardson@srbc.net.* Regular mail inquiries may be sent to the above address.

SUPPLEMENTARY INFORMATION: This notice lists the projects, described below, receiving approval for the consumptive use of water pursuant to the Commission's approval by rule process set forth in 18 CFR 806.22(f) for the time period specified above:

Approvals by Rule Issued Under 18 CFR 806.22(f)

1. XTO Energy Incorporated, Pad ID: Spiece Unit A, ABR–201107001, Jackson Township, Columbia County, Pa.; Consumptive Use of up to 4.000 mgd; Approval Date: July 1, 2011.

2. Chesapeake Appalachia, LLC, Pad ID: Belawske, ABR–201107002, Burlington Borough, Bradford County, Pa.; Consumptive Use of up to 7.500 mgd; Approval Date: July 5, 2011.

3. Chesapeake Appalachia, LLC, Pad ID: SJW, ABR–201107003, Wilmot Township, Bradford County, Pa.; Consumptive Use of up to 7.500 mgd; Approval Date: July 5, 2011.

4. Chesapeake Appalachia, LLC, Pad ID: ACW, ABR–201107004, Leroy Township, Bradford County, Pa.; Consumptive Use of up to 7.500 mgd; Approval Date: July 5, 2011.

5. Seneca Resources Corporation, Pad ID: DCNR 595 Pad I 1V, ABR–201107005, Bloss Township, Tioga County, Pa.; Consumptive Use of up to 4.000 mgd; Approval Date: July 5, 2011.

6. Seneca Resources Corporation, Pad ID: DCNR 007 Pad G 10V, ABR–201107006, Shippen Township, Tioga County, Pa.; Consumptive Use of up to 4.000 mgd; Approval Date: July 5, 2011.

7. Seneca Resources Corporation, Pad ID: DCNR 100 Pad D 85V, ABR–201107007, McIntyre Township, Lycoming County, Pa.; Consumptive Use of up to 4.000 mgd; Approval Date: July 5, 2011.

8. Penn Virginia Oil & Gas Corporation, Pad ID: Godshall B Pad, ABR–201107008, Hector Township, Potter County, Pa.; Consumptive Use of up to 4.500 mgd; Approval Date: July 5, 2011.

9. EXCO Resources (PA), LLC, Pad ID: Houseknecht Drilling Pad #1, ABR–201012014.1, Davidson Township, Sullivan County, Pa.; Consumptive Use of up to 8.000 mgd; Approval Date: July 5, 2011.

10. EXCO Resources (PA), LLC, Pad ID: Kensinger 3H Drilling Pad #1, ABR–20100205.1, Penn Township, Lycoming County, Pa.; Consumptive Use of up to 8.000 mgd; Approval Date: July 5, 2011.

11. Energy Corporation of America, Pad ID: Whitetail #1–5MH, ABR–201008112.1, Goshen and Girard Townships, Clearfield County, Pa.; Consumptive Use of up to 5.000 mgd; Approval Date: July 5, 2011.

12. Energy Corporation of America, Pad ID: Coldstream Affiliates #1MH, ABR–201007051.1, Goshen Township, Clearfield County, Pa.; Consumptive Use of up to 5.000 mgd; Approval Date: July 5, 2011.

13. Carrizo Marcellus, LLC, Pad ID: Erickson Family Trust Pad, ABR–201107009, Woodward Township, Clearfield County, Pa.; Consumptive Use of up to 2.100 mgd; Approval Date: July 6, 2011.

14. Carrizo Marcellus, LLC, Pad ID: Cowfer B (CC–09) Pad, ABR–201107010, Gulich Township, Clearfield County, Pa.; Consumptive Use of up to 2.100 mgd; Approval Date: July 6, 2011.

15. Carrizo Marcellus, LLC, Pad ID: Giangrieco Pad, ABR–201107011, Forest Lake Township, Susquehanna County, Pa.; Consumptive Use of up to 2.100 mgd; Approval Date: July 6, 2011.

16. Carrizo Marcellus, LLC, Pad ID: Steinman Development Co. (CC–11) Pad, ABR–201107012, Rush Township, Centre County, Pa.; Consumptive Use of up to 2.100 mgd; Approval Date: July 6, 2011.

17. Carrizo Marcellus, LLC, Pad ID: Hegarty (CC–04) Pad, ABR–201107013, Beccaria Township, Clearfield County, Pa.; Consumptive Use of up to 2.100 mgd; Approval Date: July 6, 2011.

18. Carrizo Marcellus, LLC, Pad ID: River Hill Power Karthaus Pad, ABR–201107014, Karthaus Township, Clearfield County, Pa.; Consumptive Use of up to 2.100 mgd; Approval Date: July 6, 2011.

19. Carrizo Marcellus, LLC, Pad ID: EP Bender B (CC–03) Pad, ABR–201107015, Reade Township, Cambria County, Pa.; Consumptive Use of up to 2.100 mgd; Approval Date: July 6, 2011.

20. EXCO Resources (PA), LLC, Pad ID: Dale Bower Drilling Pad #1, ABR–20100214.1, Penn Township, Lycoming County, Pa.; Consumptive Use of up to 8.000 mgd; Approval Date: July 8, 2011.

21. XTO Energy Incorporated, Pad ID: Raymond Unit A, ABR–201107016, Pine Township, Columbia County, Pa.; Consumptive Use of up to 4.000 mgd; Approval Date: July 8, 2011.

22. XTO Energy Incorporated, Pad ID: TLT Unit A, ABR–201107017, Jordan Township, Lycoming County, Pa.; Consumptive Use of up to 4.000 mgd; Approval Date: July 8, 2011.

23. EOG Resources, Inc., Pad ID: HOUSER 1H Pad, ABR–201107018, Burlington Township, Bradford County, Pa.; Consumptive Use of up to 4.999 mgd; Approval Date: July 8, 2011.

24. EOG Resources, Inc., Pad ID: FAY 1H Pad, ABR–201107019, Ridgebury Township, Bradford County, Pa.; Consumptive Use of up to 4.999 mgd; Approval Date: July 8, 2011.

25. EOG Resources, Inc., Pad ID: NICHOLS 2H Pad, ABR–201107020, Smithfield Township, Bradford County, Pa.; Consumptive Use of up to 4.999 mgd; Approval Date: July 8, 2011.

26. EOG Resources, Inc., Pad ID: STAHL 1H Pad, ABR–201107021, Smithfield Township, Bradford County, Pa.; Consumptive Use of up to 4.999 mgd; Approval Date: July 8, 2011.

27. EOG Resources, Inc., Pad ID: HOLCOMBE 1H Pad, ABR–201107022,

Smithfield Township, Bradford County, Pa.; Consumptive Use of up to 4.999 mgd; Approval Date: July 8, 2011.

28. EOG Resources, Inc., Pad ID: CRANE Pad, ABR–201107023, Smithfield Township, Bradford County, Pa.; Consumptive Use of up to 4.999 mgd; Approval Date: July 8, 2011.

29. XTO Energy Incorporated, Pad ID: Free Library Unit E, ABR–201107024, Beech Creek Township, Clinton County, Pa.; Consumptive Use of up to 4.000 mgd; Approval Date: July 11, 2011.

30. Penn Virginia Oil & Gas Corporation, Pad ID: Original Ten Pad, ABR–201107025, Hector Township, Potter County, Pa.; Consumptive Use of up to 4.500 mgd; Approval Date: July 11, 2011.

31. Penn Virginia Oil & Gas Corporation, Pad ID: Godshall A Pad, ABR–201107026, Hector Township, Potter County, Pa.; Consumptive Use of up to 4.500 mgd; Approval Date: July 11, 2011.

32. Seneca Resources Corporation, Pad ID: DCNR 007 Pad T 20V, ABR–201107027, Gaines Township, Tioga County, Pa.; Consumptive Use of up to 4.000 mgd; Approval Date: July 11, 2011.

33. EXCO Resources (PA), LLC, Pad ID: Doebler Drilling Pad #1, ABR–201012033.1, Penn Township, Lycoming County, Pa.; Consumptive Use of up to 8.000 mgd; Approval Date: July 11, 2011.

34. Chief Oil & Gas LLC, Pad ID: Kuziak Drilling Pad #1, ABR–201107028, Fox Township, Sullivan County, Pa.; Consumptive Use of up to 2.000 mgd; Approval Date: July 12, 2011.

35. Cabot Oil & Gas Corporation, Pad ID: VandermarkR P1, ABR–201107029, Dimock Township, Susquehanna County, Pa.; Consumptive Use of up to 3.575 mgd; Approval Date: July 12, 2011.

36. Anadarko E&P Company LP, Pad ID: COP Tract 027B Pad A, ABR–201107030, McHenry Township, Lycoming County, Pa.; Consumptive Use of up to 4.000 mgd; Approval Date: July 14, 2011.

37. Seneca Resources Corporation, Pad ID: DCNR 007 Pad D 11V, ABR–201107031, Delmar Township, Tioga County, Pa.; Consumptive Use of up to 4.000 mgd; Approval Date: July 15, 2011.

38. Seneca Resources Corporation, Pad ID: Rich Valley Pad E, ABR–201107032, Shippen Township, Cameron County, Pa.; Consumptive Use of up to 4.000 mgd; Approval Date: July 15, 2011.

39. Seneca Resources Corporation, Pad ID: DCNR 595 Pad G, ABR–201107033, Blossburg Borough, Tioga County, Pa.; Consumptive Use of up to 4.000 mgd; Approval Date: July 15, 2011.

40. Seneca Resources Corporation, Pad ID: DCNR 007 Pad H 12V, ABR–201107034, Delmar Township, Tioga County, Pa.; Consumptive Use of up to 4.000 mgd; Approval Date: July 15, 2011.

41. Seneca Resources Corporation, Pad ID: DCNR 100 Pad B, ABR–201107035, McIntyre Township, Lycoming County, Pa.; Consumptive Use of up to 4.000 mgd; Approval Date: July 15, 2011.

42. Chesapeake Appalachia, LLC, Pad ID: Layton, ABR–201107036, Litchfield Township, Bradford County, Pa.; Consumptive Use of up to 7.500 mgd; Approval Date: July 15, 2011.

43. Chesapeake Appalachia, LLC, Pad ID: Oilcan, ABR–201107037, Overton Township, Bradford County, Pa.; Consumptive Use of up to 7.500 mgd; Approval Date: July 15, 2011.

44. Chesapeake Appalachia, LLC, Pad ID: Burns, ABR–201107038, Ulster Township, Bradford County, Pa.; Consumptive Use of up to 7.500 mgd; Approval Date: July 15, 2011.

45. EQT Production Company, Pad ID: Gobbler, ABR–201107039, Huston Township, Clearfield County, Pa.; Consumptive Use of up to 3.000 mgd; Approval Date: July 15, 2011.

46. EQT Production Company, Pad ID: Turkey, ABR–201107040, Huston Township, Clearfield County, Pa.; Consumptive Use of up to 3.000 mgd; Approval Date: July 15, 2011.

47. EXCO Resources (PA), LLC, Pad ID: Niedzwiecki Drilling Pad #1, ABR–201012025.1, Sugarloaf Township, Columbia County, Pa.; Consumptive Use of up to 8.000 mgd; Approval Date: July 18, 2011.

48. XTO Energy Incorporated, Pad ID: Buck Unit A, ABR–201107041, Penn Township, Lycoming County, Pa.; Consumptive Use of up to 4.000 mgd; Approval Date: July 21, 2011.

49. Anadarko E&P Company LP, Pad ID: COP Tr 285 Pad E, ABR–201007074.1, Grugan Township, Clinton County, Pa.; Consumptive Use of up to 4.000 mgd; Approval Date: July 26, 2011.

50. Anadarko E&P Company LP, Pad ID: COP Tr 290 Pad A, ABR–201009043.1, McHenry Township, Lycoming County, Pa.; Consumptive Use of up to 4.000 mgd; Approval Date: July 26, 2011.

51. Anadarko E&P Company LP, Pad ID: COP Tr 289 Pad D, ABR–201008030.1, McHenry Township, Lycoming County, Pa.; Consumptive Use of up to 4.000 mgd; Approval Date: July 26, 2011.

52. Southwestern Energy Production Company, Pad ID: Van Order Pad, ABR–201107042, Herrick Township, Bradford County, Pa.; Consumptive Use of up to 4.990 mgd; Approval Date: July 26, 2011.

53. Southwestern Energy Production Company, Pad ID: Clark Pad, ABR–201107043, Orwell Township, Bradford County, Pa.; Consumptive Use of up to 4.990 mgd; Approval Date: July 26, 2011.

54. Southwestern Energy Production Company, Pad ID: Lyncott Corp Pad, ABR–201107044, New Milford Township, Susquehanna County, Pa.; Consumptive Use of up to 4.990 mgd; Approval Date: July 26, 2011.

55. Southwestern Energy Production Company, Pad ID: Bark'em Squirrel Pad, ABR–201107045, New Milford Township, Susquehanna County, Pa.; Consumptive Use of up to 4.990 mgd; Approval Date: July 26, 2011.

56. Pennsylvania General Energy Co., LLC, Pad ID: COP Tract 729 Pad E, ABR–201107046, Cummings Township, Lycoming County, Pa.; Consumptive Use of up to 3.500 mgd; Approval Date: July 26, 2011.

57. Chesapeake Appalachia, LLC, Pad ID: Fisher, ABR–201107047, Wysox Township, Bradford County, Pa.; Consumptive Use of up to 7.500 mgd; Approval Date: July 26, 2011.

58. Chesapeake Appalachia, LLC, Pad ID: Paul, ABR–201107048, Ulster Township, Bradford County, Pa.; Consumptive Use of up to 7.500 mgd; Approval Date: July 26, 2011.

59. Talisman Energy USA Inc., Pad ID: 05 164 Bennett, ABR–201107049, Pike Township, Bradford County, Pa.; Consumptive Use of up to 6.000 mgd; Approval Date: July 26, 2011.

60. Talisman Energy USA Inc., Pad ID: 02 153 Mountain Run Hunting Club, ABR–201107050, Union Township, Tioga County, Pa.; Consumptive Use of up to 6.000 mgd; Approval Date: July 26, 2011.

61. Cabot Oil & Gas Corporation, Pad ID: Dobrosielski P1, ABR–201107051, Auburn Township, Susquehanna County, Pa.; Consumptive Use of up to 3.575 mgd; Approval Date: July 26, 2011.

62. Southwestern Energy Production Company, Pad ID: Bernstein Pad, ABR–201107052, Clifford Township, Susquehanna County, Pa.; Consumptive Use of up to 4.990 mgd; Approval Date: July 26, 2011.

Authority: Pub. L. 91–575, 84 Stat. 1509 *et seq.,* 18 CFR parts 806, 807, and 808.

Dated: August 17, 2011.

Stephanie L. Richardson,

Secretary to the Commission.

[FR Doc. 2011–21781 Filed 8–25–11; 8:45 am]

BILLING CODE 7040–01–P

DEPARTMENT OF TRANSPORTATION

Federal Aviation Administration

Agency Information Collection Activities: Requests for Comments; Clearance of Renewed Approval of Information Collection: Protection of Voluntarily Submitted Information

AGENCY: Federal Aviation Administration (FAA), DOT.

ACTION: Notice and request for comments.

SUMMARY: In accordance with the Paperwork Reduction Act of 1995, FAA invites public comments about our intention to request the Office of Management and Budget (OMB) approval for to renew an information collection. The **Federal Register** Notice with a 60-day comment period soliciting comments on the following collection of information was published on June 21, 2011, vol. 76, no. 119, pages 36168–36169. One of the ways to have an information program designated as protected under Section 40123 is for an air carrier or other person to submit an application for an individual program. The FAA evaluates the application and either publishes a designation based on the application for public comment or denies the application.

DATES: Written comments should be submitted by September 26, 2011.

FOR FURTHER INFORMATION CONTACT: Carla Scott on (202) 385–4293, or by e-mail at: *Carla.Scott@faa.gov*.

SUPPLEMENTARY INFORMATION:

OMB Control Number: 2120–0646.

Title: Protection of Voluntarily Submitted Information.

Form Numbers: There are no FAA forms associated with this collection.

Type of Review: Renewal of an information collection.

Background: To encourage people to voluntarily submit desired information, § 40123 was added to Title 49, United States Code, in the Federal Aviation Reauthorization Act of 1996. Section 40123 allows the Administrator, through FAA regulations, to protect from disclosure voluntarily provided information relating to safety and security issues. This rule imposes a negligible paperwork burden for air carriers that choose to participate in this program. The air carrier submits a letter notifying the Administrator that they wish to participate in a current program.

Respondents: Approximately 5 applicants.

Frequency: Information is collected on occasion.

Estimated Average Burden per Response: 1 hour.

Estimated Total Annual Burden: 5 hours.

ADDRESSES: Interested persons are invited to submit written comments on the proposed information collection to the Office of Information and Regulatory Affairs, Office of Management and Budget. Comments should be addressed to the attention of the Desk Officer, Department of Transportation/FAA, and sent via electronic mail to *oira_submission@omb.eop.gov,* or faxed to (202) 395–6974, or mailed to the Office of Information and Regulatory Affairs, Office of Management and Budget, Docket Library, Room 10102, 725 17th Street, NW., Washington, DC 20503.

Public Comments Invited: You are asked to comment on any aspect of this information collection, including (a) Whether the proposed collection of information is necessary for FAA's performance; (b) the accuracy of the estimated burden; (c) ways for FAA to enhance the quality, utility and clarity of the information collection; and (d) ways that the burden could be minimized without reducing the quality of the collected information. The agency will summarize and/or include your comments in the request for OMB's clearance of this information collection.

Issued in Washington, DC, on August 19, 2011.

Carla Scott,

FAA Information Collection Clearance Officer, IT Enterprises Business Services Division, AES–200.

[FR Doc. 2011–21768 Filed 8–25–11; 8:45 am]

BILLING CODE 4910–13–P

DEPARTMENT OF TRANSPORTATION

Federal Aviation Administration

Agency Information Collection Activities: Requests for Comments; Clearance of Renewed Approval of Information Collection: Advanced Qualification Program (AQP)

AGENCY: Federal Aviation Administration (FAA), DOT.

ACTION: Notice and request for comments.

SUMMARY: In accordance with the Paperwork Reduction Act of 1995, FAA invites public comments about our intention to request the Office of Management and Budget (OMB) approval for to renew an information collection. The **Federal Register** Notice with a 60-day comment period soliciting comments on the following collection of information was published on June 21, 2011, vol. 76, no. 119, page 36169. The Advanced Qualification Program (AQP) incorporates data driven quality control processes for validating and maintaining the effectiveness of air carrier training program curriculum content.

DATES: Written comments should be submitted by September 26, 2011.

FOR FURTHER INFORMATION CONTACT: Carla Scott on (202) 385–4293, or by e-mail at: *Carla.Scott@faa.gov*.

SUPPLEMENTARY INFORMATION:

OMB Control Number: 2120–0701.

Title: Advanced Qualification Program (AQP).

Form Numbers: There are no FAA forms associated with this collection.

Type of Review: Renewal of an information collection.

Background: Under SFAR No. 58, Advanced Qualification Program (AQP), the FAA provides certificated air carriers, as well as training centers they employ, with a regulatory alternative for training, checking, qualifying, and certifying aircrew personnel subject to the requirements of 14 CFR parts 121 and 135. AQP is continuously validated through the collection and analysis of trainee performance. Data collection and analysis processes ensure that the certificate holder provides performance information on its crewmembers, flight instructors, and evaluators that will enable the certificate holder and the FAA to determine whether the form and content of training and evaluation activities are satisfactorily accomplishing the overall objectives of the curriculum.

Respondents: Approximately 18 certificated air carriers and training centers.

Frequency: Information is collected monthly.

Estimated Average Burden per Response: 1.20 hours.

Estimated Total Annual Burden: 432 hours.

ADDRESSES: Interested persons are invited to submit written comments on the proposed information collection to the Office of Information and Regulatory Affairs, Office of Management and Budget. Comments should be addressed to the attention of the Desk Officer, Department of Transportation/FAA, and sent via electronic mail to *oira_submission@omb.eop.gov,* or faxed to (202) 395–6974, or mailed to the Office of Information and Regulatory

Affairs, Office of Management and Budget, Docket Library, Room 10102, 725 17th Street, NW., Washington, DC 20503.

Public Comments Invited: You are asked to comment on any aspect of this information collection, including (a) whether the proposed collection of information is necessary for FAA's performance; (b) the accuracy of the estimated burden; (c) ways for FAA to enhance the quality, utility and clarity of the information collection; and (d) ways that the burden could be minimized without reducing the quality of the collected information. The agency will summarize and/or include your comments in the request for OMB's clearance of this information collection.

Issued in Washington, DC, on August 19, 2011.

Carla Scott,

FAA Information Collection Clearance Officer, IT Enterprises Business Services Division, AES–200.

[FR Doc. 2011–21778 Filed 8–25–11; 8:45 am]

BILLING CODE 4910–13–P

DEPARTMENT OF TRANSPORTATION

Federal Aviation Administration

Agency Information Collection Activities: Requests for Comments; Clearance of Renewed Approval of Information Collection: Malfunction or Defect Report

AGENCY: Federal Aviation Administration (FAA), DOT.

ACTION: Notice and request for comments.

SUMMARY: In accordance with the Paperwork Reduction Act of 1995, FAA invites public comments about our intention to request the Office of Management and Budget (OMB) approval for to renew an information collection. The **Federal Register** Notice with a 60-day comment period soliciting comments on the following collection of information was published on June 21, 2011, vol. 76, no. 119, page 36170–36171. The information collected allows the FAA to evaluate its certification standards, maintenance programs, and regulatory requirements. It is also the basis for issuance of Airworthiness Directives designed to prevent unsafe conditions and accidents.

DATES: Written comments should be submitted by September 26, 2011.

FOR FURTHER INFORMATION CONTACT: Carla Scott on (202) 385–4293, or by e-mail at: *Carla.Scott@faa.gov.*

SUPPLEMENTARY INFORMATION:

OMB Control Number: 2120–0003.

Title: Malfunction or Defect Report.

Form Numbers: FAA Form 8010–4.

Type of Review: Renewal of an information collection.

Background: Repair stations certificated under Part 145 and air taxi operators certificated under Part 135 mandatorily submit malfunction or defect reports on Federal Aviation Administration (FAA) Form 8010–4. When defects are reported which are likely to exist on other products of the same or similar design, the FAA may disseminate safety information to a particular section of the aviation community. The FAA also may adopt new regulations or issue Airworthiness Directives (AD's) to address a specific problem.

Respondents: Approximately 60,000 operators.

Frequency: Information is collected on occasion.

Estimated Average Burden per Response: 10 minutes.

Estimated Total Annual Burden: 7,839 hours.

ADDRESSES: Interested persons are invited to submit written comments on the proposed information collection to the Office of Information and Regulatory Affairs, Office of Management and Budget. Comments should be addressed to the attention of the Desk Officer, Department of Transportation/FAA, and sent via electronic mail to *oira_submission@omb.eop.gov,* or faxed to (202) 395–6974, or mailed to the Office of Information and Regulatory Affairs, Office of Management and Budget, Docket Library, Room 10102, 725 17th Street, NW., Washington, DC 20503.

Public Comments Invited: You are asked to comment on any aspect of this information collection, including (a) whether the proposed collection of information is necessary for FAA's performance; (b) the accuracy of the estimated burden; (c) ways for FAA to enhance the quality, utility and clarity of the information collection; and (d) ways that the burden could be minimized without reducing the quality of the collected information. The agency will summarize and/or include your comments in the request for OMB's clearance of this information collection.

Issued in Washington, DC, on August 19, 2011.

Carla Scott,

FAA Information Collection Clearance Officer, IT Enterprises Business Services Division, AES–200.

[FR Doc. 2011–21835 Filed 8–25–11; 8:45 am]

BILLING CODE 4910–13–P

DEPARTMENT OF TRANSPORTATION

Federal Aviation Administration

Agency Information Collection Activities: Requests for Comments; Clearance of Renewed Approval of Information Collection: Reporting of Laser Illumination of Aircraft

AGENCY: Federal Aviation Administration (FAA), DOT.

ACTION: Notice and request for comments.

SUMMARY: In accordance with the Paperwork Reduction Act of 1995, FAA invites public comments about our intention to request the Office of Management and Budget (OMB) approval for to renew an information collection. The **Federal Register** Notice with a 60-day comment period soliciting comments on the following collection of information was published on June 21, 2011, vol. 76, no. 119, page 36169–36170. This collection covers the reporting of unauthorized illumination of aircraft by lasers.

DATES: Written comments should be submitted by September 26, 2011.

FOR FURTHER INFORMATION CONTACT: Carla Scott on (202) 385–4293, or by e-mail at: *Carla.Scott@faa.gov.*

SUPPLEMENTARY INFORMATION:

OMB Control Number: 2120–0698.

Title: Reporting of Laser Illumination of Aircraft.

Form Numbers: Advisory Circular 70–2.

Type of Review: Renewal of an information collection.

Background: Advisory Circular 70–2 provides guidance to civilian air crews on the reporting of laser illumination incidents and recommended mitigation actions to be taken in order to ensure continued safe and orderly flight operations. Information is collected from pilots and aircrews that are affected by an unauthorized illumination by lasers. The requested reporting involves an immediate broadcast notification to Air Traffic Control (ATC) when the incident occurs, as well as a broadcast warning of the incident if the aircrew is flying in uncontrolled airspace. In addition, the AC requests that the aircrew supply a written report of the incident and send it by fax or e-mail to the Washington Operations Control Complex (WOCC) as soon as possible.

Respondents: Approximately 1,100 pilots and crewmembers.

Frequency: Information is collected on occasion.

Estimated Average Burden per Response: 10 minutes.

Estimated Total Annual Burden: 183 hours.

ADDRESSES: Interested persons are invited to submit written comments on the proposed information collection to the Office of Information and Regulatory Affairs, Office of Management and Budget. Comments should be addressed to the attention of the Desk Officer, Department of Transportation/FAA, and sent via electronic mail to *oira_submission@omb.eop.gov,* or faxed to (202) 395–6974, or mailed to the Office of Information and Regulatory Affairs, Office of Management and Budget, Docket Library, Room 10102, 725 17th Street, NW., Washington, DC 20503.

Public Comments Invited: You are asked to comment on any aspect of this information collection, including (a) whether the proposed collection of information is necessary for FAA's performance; (b) the accuracy of the estimated burden; (c) ways for FAA to enhance the quality, utility and clarity of the information collection; and (d) ways that the burden could be minimized without reducing the quality of the collected information. The agency will summarize and/or include your comments in the request for OMB's clearance of this information collection.

Issued in Washington, DC, on August 19, 2011.

Carla Scott,

FAA Information Collection Clearance Officer, IT Enterprises Business Services Division, AES–200.

[FR Doc. 2011–21775 Filed 8–25–11; 8:45 am]

BILLING CODE 4910–13–P

DEPARTMENT OF TRANSPORTATION

Federal Aviation Administration

Agency Information Collection Activities: Requests for Comments; Clearance of Renewed Approval of Information Collection: Aircraft Registration

AGENCY: Federal Aviation Administration (FAA), DOT.

ACTION: Notice and request for comments.

SUMMARY: In accordance with the Paperwork Reduction Act of 1995, FAA invites public comments about our intention to request the Office of Management and Budget (OMB) approval for to renew an information collection. The **Federal Register** Notice with a 60-day comment period soliciting comments on the following collection of information was published on June 21, 2011, vol. 76, no. 119, page 36167. The information collected is used by the FAA to register aircraft or hold an aircraft in trust. The information required to register and prove ownership of an aircraft is required by any person wishing to register an aircraft.

DATES: Written comments should be submitted by September 26, 2011.

FOR FURTHER INFORMATION CONTACT: Carla Scott on (202) 385–4293, or by e-mail at: *Carla.Scott@faa.gov.*

SUPPLEMENTARY INFORMATION:

OMB Control Number: 2120–0042.

Title: Aircraft Registration.

Form Numbers: FAA Forms 8050–1, 8050–2, 8050–4, 8050–98, 8050–117.

Type of Review: Renewal of an information collection.

Background: Public Law 103–272 states that all aircraft must be registered before they may be flown. It sets forth registration eligibility requirements and provides for application for registration as well as suspension and/or revocation of registration. The information collected is used by the FAA to register an aircraft or hold an aircraft in trust. The information requested is required to register and prove ownership.

Respondents: Approximately 146,757 applicants.

Frequency: Information is collected on occasion.

Estimated Average Burden per Response: 32 minutes.

Estimated Total Annual Burden: 103,982 hours.

ADDRESSES: Interested persons are invited to submit written comments on the proposed information collection to the Office of Information and Regulatory Affairs, Office of Management and Budget. Comments should be addressed to the attention of the Desk Officer, Department of Transportation/FAA, and sent via electronic mail to *oira_submission@omb.eop.gov,* or faxed to (202) 395–6974, or mailed to the Office of Information and Regulatory Affairs, Office of Management and Budget, Docket Library, Room 10102, 725 17th Street, NW., Washington, DC 20503.

Public Comments Invited: You are asked to comment on any aspect of this information collection, including (a) Whether the proposed collection of information is necessary for FAA's performance; (b) the accuracy of the estimated burden; (c) ways for FAA to enhance the quality, utility and clarity of the information collection; and (d) ways that the burden could be minimized without reducing the quality of the collected information. The agency will summarize and/or include your comments in the request for OMB's clearance of this information collection.

Issued in Washington, DC, on August 19, 2011.

Carla Scott,

FAA Information Collection Clearance Officer, IT Enterprises Business Services Division, AES–200.

[FR Doc. 2011–21766 Filed 8–25–11; 8:45 am]

BILLING CODE 4910–13–P

DEPARTMENT OF TRANSPORTATION

Federal Aviation Administration

Government/Industry Aeronautical Charting Forum Meeting

AGENCY: Federal Aviation Administration (FAA), DOT.

ACTION: Notice of public meeting.

SUMMARY: This notice announces the bi-annual meeting of the Federal Aviation Administration (FAA) Aeronautical Charting Forum (ACF) to discuss informational content and design of aeronautical charts and related products, as well as instrument flight procedures development policy and design criteria.

DATES: The ACF is separated into two distinct groups. The Instrument Procedures Group (IPG) will meet October 25, 2011 from 8:30 a.m. to 5 p.m. The Charting Group will meet October 26 and 27, 2011 from 8:30 a.m. to 5 p.m.

ADDRESSES: The meeting will be hosted by FAA AeroNav Products at their offices at 1305 East-West Highway, Silver Spring, MD 20910.

FOR FURTHER INFORMATION CONTACT: For information relating to the Instrument Procedures Group, contact Thomas E. Schneider, FAA, Flight Procedures Standards Branch, AFS–420, 6500 South MacArthur Blvd, P.O. Box 25082, Oklahoma City, OK 73125; telephone (405) 954–5852; fax: (405) 954–2528.

For information relating to the Charting Group, contact John A. Moore, FAA, National Aeronautical Navigation Products Group (AeroNav Products), Regulatory Support and Coordination Team, AJV–3B, 1305 East-West Highway, SSMC4, Station 4641, Silver Spring, MD 20910; telephone: (301) 427–5154, fax: (301) 427–5412.

SUPPLEMENTARY INFORMATION: Pursuant to § 10(a)(2) of the Federal Advisory Committee Act (Pub. L. 92–463; 5 U.S.C. App. II), notice is hereby given of a meeting of the FAA Aeronautical Charting Forum to be held from October 25 through October 27, 2011, from 8:30 a.m. to 5 p.m. at FAA AeroNav Products

at their offices at 1305 East-West Highway, Silver Spring, MD 20910.

The Instrument Procedures Group agenda will include briefings and discussions on recommendations regarding pilot procedures for instrument flight, as well as criteria, design, and developmental policy for instrument approach and departure procedures.

The Charting Group agenda will include briefings and discussions on recommendations regarding aeronautical charting specifications, flight information products, and new aeronautical charting and air traffic control initiatives. Attendance is open to the interested public, but will be limited to the space available.

The public must make arrangements by October 7, 2011, to present oral statements at the meeting. The public may present written statements and/or new agenda items to the committee by providing a copy to the person listed in the **FOR FURTHER INFORMATION CONTACT** section not later than October 7, 2011. Public statements will only be considered if time permits.

Issued in Washington, DC, on August 18, 2011.

John A. Moore,

Co-Chair, Aeronautical Charting Forum.

[FR Doc. 2011–21909 Filed 8–25–11; 8:45 am]

BILLING CODE 4910–13–P

DEPARTMENT OF TRANSPORTATION

Federal Highway Administration

[Project Number GAI–0067–01 (004)]

Environmental Impact Statement: Hancock County, MS

AGENCY: Federal Highway Administration (FHWA), Department Of Transportation (DOT).

ACTION: Notice of intent.

SUMMARY: The FHWA is issuing this notice to advise the public that an environmental impact statement will be prepared for a proposed highway project in Hancock County, Mississippi. The project study area will extend a distance of approximately six (6) miles from Interstate 10 to the intersection of State Routes 43 and 603 in the vicinity of Kiln, Mississippi.

FOR FURTHER INFORMATION CONTACT: Mr. Claiborne Barnwell, Project Development Team Leader, Federal Highway Administration, 100 West Capitol Street, Suite 1062, Jackson, MS 39269, Telephone: (601) 965–4217. Contact at the State level is Ms. Kim Thurman, Environmental/Location Division Administrator, Mississippi Department of Transportation, P.O. Box 1850, Jackson, MS 39215–1850, telephone: (601) 359–7920.

SUPPLEMENTARY INFORMATION: The FHWA, in cooperation with the Mississippi Department of Transportation (MDOT), will prepare an Environmental Impact Statement (EIS) for the proposed widening and/or realignment of State Route 43/603 in Hancock County, Mississippi. The proposed improvements are intended to provide a safe and effective emergency evacuation route while alleviating high levels of congestion and travel delays presently being experienced. This project was initially started in 2008 as an Environmental Assessment. However, due to the complexity of the project and a high number of sensitive wetland and water issues, it was determined that an EIS was more appropriate. The initial terminus was evaluated between Interstate 10 near Kiln and Interstate 59 near Picayune, a distance of some 30-miles. In consideration of the immediate need and the available funding, the termini has been determined to extend between Interstate 10 south of Kiln and the intersection of State Route 43 and 603 north of Kiln, a distance of approximately 6-miles.

A Coordination Plan for Agency and Public Involvement will be developed in accordance with Public law 109–59, SAFETEA–LU, Title VI, Section 6002, Efficient Environmental Reviews for Project Decision Making, August 10, 2005, and will outline the process by which project information will be communicated to the lead, cooperating, participating, other agencies and organizations, and the public. This plan will also identify how input from agencies and the public will be solicited and considered. The coordination Plan is intended to be a flexible and fluid document and will be available at public and agency meetings for review. The purpose of the EIS is to address the transportation, environmental, and safety issues of such a transportation corridor. The proposed transportation project will be studied both for widening of the existing roadway and for the potential for new alignment in some areas and will provide a safer roadway and improve mobility for those traveling north from Interstate 10 to the intersection of state Routes 43 and 603. The proposed project will also specifically address traffic concerns in Kiln, Mississippi and how the existing congestion through the town can be best alleviated while preserving sensitive wetland resources. Alternatives under consideration include (1) taking no action and (2) build alternatives.

The FHWA and MDOT are seeking input as a part of the scoping process to assist in determining and clarifying issues relative to this project. Letters describing the proposed action and soliciting comments will be sent to appropriate Federal, state, and local agencies, Native American Tribes, private organizations and citizens who have previously expressed or are known to have interest in this proposal. A formal scoping meeting with Federal, state, and local agencies, and other interested parties will be held in the near future. Public involvement meetings will be held during the EIS process. The draft EIS will be available for public and agency review and comment prior to the official public hearing.

To ensure that the full range of issues related to this proposed action are addressed and all significant issues identified, comments and suggestions are invited from all interested parties. Comments or questions concerning this proposed action and the EIS should be directed to the FHWA at the address provided above.

Dated: August 19, 2011.

Andrew H. Hughes,

Division Administrator, Mississippi, Federal Highway Administration, Jackson, Mississippi.

[FR Doc. 2011–21837 Filed 8–25–11; 8:45 am]

BILLING CODE P

DEPARTMENT OF TRANSPORTATION

Federal Highway Administration

Rescinding the Notice of Intent for an Environmental Impact Statement (EIS): Hancock and Pearl River Counties, MS

AGENCY: Federal Highway Administration (FHWA), DOT.

ACTION: Rescind Notice of Intent to prepare an EIS.

SUMMARY: This notice rescinds the Notice of Intent for preparing an Environmental Impact Statement (EIS) for proposed highway, State Route 603/43, to provide a connection between Interstate 10 south of Kiln and Interstate 59 in the City of Picayune, Hancock and Pearl River Counties, Mississippi. The original Notice of Intent for this EIS process was published in the **Federal Register** on October 26, 2009.

FOR FURTHER INFORMATION CONTACT: Claiborne Barnwell, Project Development Team Leader, Federal Highway Administration, Mississippi Division, 100 West Capitol Street, Suite

1026, Jackson, Mississippi 39269, Telephone: (601) 965–4217 (e-mail: *claiborne.barnwell@dot.gov*).

SUPPLEMENTARY INFORMATION:

Background

The Federal Highway Administration (FHWA) in cooperation with the Mississippi Department of Transportation (MDOT) initiated an Environmental Impact Statement (EIS) with a Notice of Intent October 26, 2009, to provide a connector road, to be built to interstate standards, between Interstate 10 and Interstate 59, a distance of approximately 30-miles.

Due to funding constraints the Notice of Intent is rescinded.

Andrew H. Hughes,

Division Administrator, Mississippi, Federal Highway Administration, Jackson, Mississippi.

[FR Doc. 2011–21746 Filed 8–25–11; 8:45 am]

BILLING CODE P

DEPARTMENT OF TRANSPORTATION

National Highway Traffic Safety Administration

[Docket No. NHTSA–2011–0063; Notice 1]

Jaguar Land Rover North America, LLC, on Behalf of Jaguar Cars Limited, Receipt of Petition for Decision of Inconsequential Noncompliance

AGENCY: National Highway Traffic Safety Administration, DOT.

ACTION: Receipt of Petition for Inconsequential Noncompliance.

SUMMARY: Jaguar Land Rover North America, LLC,[1] on behalf of Jaguar Cars Limited [2] (collectively referred to as ''Jaguar'') has determined that model year 2010 and certain 2011 Jaguar XJ passenger cars manufactured between September 11, 2009 and March 28, 2011, do not fully comply with paragraphs S5.2.1 and S5.5.2 of Federal Motor Vehicle Safety Standard (FMVSS) No. 101,[3] *Controls and displays.* Jaguar has filed an appropriate report pursuant to 49 CFR part 573, *Defect and Noncompliance Responsibility and Reports* (dated April 15, 2011).

Pursuant to 49 U.S.C. 30118(d) and 30120(h) (see implementing rule at 49 CFR part 556), Jaguar has petitioned for an exemption from the notification and remedy requirements of 49 U.S.C. Chapter 301 on the basis that this noncompliance is inconsequential to motor vehicle safety.

This notice of receipt of Jaguar's petition is published under 49 U.S.C. 30118 and 30120 and does not represent any agency decision or other exercise of judgment concerning the merits of the petition.

Affected are approximately 8621 model year 2010 and 2011 Jaguar XJ passenger cars that were manufactured at Jaguar's Castle Bromwich assembly plant between September 11, 2009 and March 28, 2011.

NHTSA notes that the statutory provisions (49 U.S.C. 30118(d) and 30120(h)) that permit manufacturers to file petitions for a determination of inconsequentiality allow NHTSA to exempt manufacturers only from the duties found in sections 30118 and 30120, respectively, to notify owners, purchasers, and dealers of a defect or noncompliance and to remedy the defect or noncompliance. Therefore, these provisions only apply to the 8621 [4] model year 2011 Jaguar XJ passenger cars that Jaguar no longer controlled at the time it determined that the noncompliance existed.

Paragraphs S5.2.1 and S5.5.2 of FMVSS No. 101 require in pertinent part:

S5.2.1 Except for the Low Tire Pressure Telltale, each control, telltale and indicator that is listed in column 1 of Table 1 or Table 2 must be identified by the symbol specified for it in column 2 or the word or abbreviation specified for it in column 3 of Table 1 or Table 2. If a symbol is used, each symbol provided pursuant to this paragraph must be substantially similar in form to the symbol as it appears in Table 1 or Table 2. If a symbol is used, each symbol provided pursuant to this paragraph must have the proportional dimensional characteristics of the symbol as it appears in Table 1 or Table * * *

S5.5.2 The telltales for any brake system malfunction required by Table 1 to be red, air bag malfunction, low tire pressure, electronic stability control malfunction (as of September 1, 2011), passenger air bag off, high beam, turn signal, and seat belt must not be shown in the same common space.

Jaguar explains that the noncompliance is that the telltales used for Brake Warning, Park Brake Warning and Antilock Braking System (ABS) failure warnings are displayed using International Organization for Standardization (ISO) symbols instead of the telltale symbols required by FMVSS No. 101.

Jaguar stated its belief that although the instrument cluster telltales are marked with ISO symbols, the noncompliance is inconsequential to motor vehicle safety for the following reasons:

(1) The functionality of all primary braking systems is not affected by this noncompliance and the vehicle will operate as intended.

(2) The owner's manual shows clearly the ISO warning symbols that may be displayed along with the FMVSS No. 101 compliant equivalents. Further, the owner's manual instructions on required actions to take in the event of a warning being displayed are the same for each telltale regardless of it being marked with an ISO symbol or with it's FMVSS No. 101 compliant equivalent.

(3) The colors of the telltales adhere to a common color scheme and are consistent between ISO and FMVSS requirements. The Owner's manual provides the following guidance to the driver:

a. RED warning lamps are for primary warnings. A primary warning must be investigated immediately by the driver or seek qualified assistance as soon as possible.

b. AMBER warning lamps are for secondary warnings. Some indicate that a vehicle system is in operation, others indicate that the driver must take action and then seek qualified assistance as soon as possible.

(4) The driver will receive ISO symbol based warnings of any affected system malfunction. These warnings, although displaying telltales marked with ISO symbols, are augmented with a message center text providing further details as to the nature of the warning symbol:

a. If low brake fluid is detected or an Electronic Brakeforce Distribution (EBD) fault identified, the ISO Brake Warning Symbol and the words ''Brake Fluid Low'' or ''EBD Fault'' will be displayed in the message center.

b. If the park brake is applied, the ISO Parking Brake symbol will be displayed. If the vehicle is moving in excess of 1.8 mph, the message displayed in the message center is ''Caution! Park Brake Applied'' and a continuous chime will sound.

c. If an antilock brake system (ABS) malfunction is detected, the ISO ABS

---

[1] Jaguar Land Rover North America, LLC manufactures and imports motor vehicles and is registered under the laws of the state of New Jersey.

[2] Jaguar Cars Limited, manufactures motor vehicles and is organized under the laws of the United Kingdom.

[3] NHTSA notes that the noncompliances identified by Jaguar in its petition are also noncompliances to identical requirements in FMVSS No. 135, *Hydraulic Brakes.*

[4] Jaguar's petition, which was filed under 49 CFR part 556, requests an agency decision to exempt Jaguar as a vehicle manufacturer from the notification and recall responsibilities of 49 CFR part 573 for 8621 of the affected vehicles. However, the agency cannot relieve vehicle distributors and dealers of the prohibitions on the sale, offer for sale, introduction or delivery for introduction into interstate commerce of the noncompliant vehicles under their control after Jaguar notified them that the subject noncompliance existed. Those vehicles must be brought into conformance, exported, or destroyed.

symbol illuminates display a message in the message center stating ''ABS Fault''.

(5) Jaguar is not aware of any incidents or injuries related to this condition.

Jaguar also explains that all unsold vehicles in the dealer stock will have the instrument cluster software configuration file settings updated to display the correct warning telltales as required by FMVSS No. 101 prior to sale.

In summation, Jaguar believes that the described noncompliance of its vehicles to be inconsequential to motor vehicle safety, and that its petition, to exempt from providing recall notification of noncompliance as required by 49 U.S.C. 30118 and remedying the recall noncompliance as required by 49 U.S.C. 30120 should be granted.

Comments: Interested persons are invited to submit written data, views, and arguments on this petition. Comments must refer to the docket and notice number cited at the beginning of this notice and be submitted by any of the following methods:

a. By mail addressed to: U.S. Department of Transportation, Docket Operations, M–30, West Building Ground Floor, Room W12–140, 1200 New Jersey Avenue, SE., Washington, DC 20590.

b. By hand delivery to U.S. Department of Transportation, Docket Operations, M–30, West Building Ground Floor, Room W12–140, 1200 New Jersey Avenue, SE., Washington, DC 20590. The Docket Section is open on weekdays from 10 a.m. to 5 p.m. except Federal holidays.

c. Electronically: By logging onto the Federal Docket Management System (FDMS) Web site at *http://www.regulations.gov/.* Follow the online instructions for submitting comments. Comments may also be faxed to 1–202–493–2251.

Comments must be written in the English language, and be no greater than 15 pages in length, although there is no limit to the length of necessary attachments to the comments. If comments are submitted in hard copy form, please ensure that two copies are provided. If you wish to receive confirmation that your comments were received, please enclose a stamped, self-addressed postcard with the comments. Note that all comments received will be posted without change to *http://www.regulations.gov,* including any personal information provided.

Documents submitted to a docket may be viewed by anyone at the address and times given above. The documents may also be viewed on the Internet at *http://www.regulations.gov* by following the online instructions for accessing the dockets. DOT's complete Privacy Act Statement is available for review in the **Federal Register** published on April 11, 2000, (65 FR 19477–78).

The petition, supporting materials, and all comments received before the close of business on the closing date indicated below will be filed and will be considered. All comments and supporting materials received after the closing date will also be filed and will be considered to the extent possible. When the petition is granted or denied, notice of the decision will be published in the **Federal Register** pursuant to the authority indicated below.

Comment closing date: September 26, 2011.

Authority: 49 U.S.C. 30118, 30120: delegations of authority at CFR 1.50 and 501.8.

Issued on: August 22, 2011.

Claude H. Harris,

Director, Office of Vehicle Safety Compliance.

[FR Doc. 2011–21951 Filed 8–25–11; 8:45 am]

BILLING CODE 4910–59–P

DEPARTMENT OF THE TREASURY

United States Mint

Notification of New Pricing Methodology

ACTION: Notice.

SUMMARY: The United States Mint is implementing a new pricing methodology for its commemorative gold coins to mitigate the effect that fluctuating gold commodity costs has on the pricing of these products. The new pricing methodology is based primarily on the London Fix weekly average (average of the London Fix prices covering the previous Thursday A.M. Fix through the Wednesday A.M. Fix) gold prices, which reflect the cost of the gold bullion that these products contain. As required by law, commemorative coins must be sold at a price equal to the sum of the face value of the coins, the surcharge with respect to such coins, and the cost of designing and issuing the coins (including labor, materials, dies, use of machinery, overhead expenses, marketing, and shipping). This pricing methodology will allow the United States Mint to change the prices of these products as often as weekly so they better reflect the costs of gold for these coins.

DATES: The new pricing methodology, as further explained in the **SUPPLEMENTARY INFORMATION** section, will go into effect on date of publication.

FOR FURTHER INFORMATION CONTACT: B.B. Craig, Associate Director for Sales and Marketing; United States Mint; 801 Ninth Street, NW.; Washington, DC 20220; or call 202–354–7500.

SUPPLEMENTARY INFORMATION: Pursuant to the authority under 31 U.S.C. 5134(f)(1)(A)(i), and public laws that authorize the Secretary of the Treasury to mint and issue commemorative coins.

Effective date of publication, the United States Mint will commence selling commemorative gold coins at prices established by using the new pricing methodology. Specifically, each Wednesday, the United States Mint will apply the average London Fix for gold (average of the London Fix prices covering the previous Thursday A.M. Fix through the Wednesday A.M. Fix) to the below pricing schedules. Price adjustments as a result of this process, if any, will be effective at 10 a.m. E.T. on the immediately following Thursday.

Dated: August 22, 2011.

Richard A. Peterson,

Deputy Director, United States Mint.

PRICING OF NUMISMATIC COMMEMORATIVE PRODUCTS CONTAINING .2431 FTO GOLD COINS WITH SURCHARGE OF $35

Average price of gold (dollars)	Commemorative gold proof (dollars)	Commemorative gold uncirculated (dollars)
500.00 to 549.99	230.55	220.55
550.00 to 599.99	242.70	232.70
600.00 to 649.99	254.85	244.85
650.00 to 699.99	267.00	257.00
700.00 to 749.99	279.15	269.15
750.00 to 799.99	291.30	281.30
800.00 to 849.99	303.45	293.45

PRICING OF NUMISMATIC COMMEMORATIVE PRODUCTS CONTAINING .2431 FTO GOLD COINS WITH SURCHARGE OF $35—Continued

Average price of gold (dollars)	Commemorative gold proof (dollars)	Commemorative gold uncirculated (dollars)
850.00 to 899.99	315.60	305.60
900.00 to 949.99	327.75	317.75
950.00 to 999.99	339.90	329.90
1,000.00 to 1,049.99	352.05	342.05
1,050.00 to 1,099.99	364.20	354.20
1,100.00 to 1,149.99	376.35	366.35
1,150.00 to 1,199.99	388.50	378.50
1,200.00 to 1,249.99	400.65	390.65
1,250.00 to 1,299.99	412.80	402.80
1,300.00 to 1,349.99	424.95	414.95
1,350.00 to 1,399.99	437.10	427.10
1,400.00 to 1,449.99	449.25	439.25
1,450.00 to 1,499.99	461.40	451.40
1,500.00 to 1,549.99	473.55	463.55
1,550.00 to 1,599.99	485.70	475.70
1,600.00 to 1,649.99	497.85	487.85
1,650.00 to 1,699.99	510.00	500.00
1,700.00 to 1,749.99	522.15	512.15
1,750.00 to 1,799.99	534.30	524.30
1,800.00 to 1,849.99	546.45	536.45
1,850.00 to 1,899.99	558.60	548.60
1,900.00 to 1,949.99	570.75	560.75
1,950.00 to 1,999.99	582.90	572.90
2,000.00 to 2,049.99	595.05	585.05
2,050.00 to 2,099.99	607.20	597.20
2,100.00 to 2,149.99	619.35	609.35
2,150.00 to 2,199.99	631.50	621.50
2,200.00 to 2,249.99	643.65	633.65
2,250.00 to 2,299.99	655.80	645.80
2,300.00 to 2,349.99	667.95	657.95
2,350.00 to 2,399.99	680.10	670.10
2,400.00 to 2,449.99	692.25	682.25
2,450.00 to 2,499.99	704.40	694.40
2,500.00 to 2,549.99	716.55	706.55
2,550.00 to 2,599.99	728.70	718.70
2,600.00 to 2,649.99	740.85	730.85
2,650.00 to 2,699.99	753.00	743.00
2,700.00 to 2,749.99	765.15	755.15
2,750.00 to 2,799.99	777.30	767.30
2,800.00 to 2,849.99	789.45	779.45
2,850.00 to 2,899.99	801.60	791.60
2,900.00 to 2,949.99	813.75	803.75
2,950.00 to 2,999.99	825.90	815.90

[FR Doc. 2011–21831 Filed 8–25–11; 8:45 am]

BILLING CODE P

FEDERAL REGISTER

Vol. 76 Friday,

No. 166 August 26, 2011

Part II

Department of the Interior

Fish and Wildlife Service

50 CFR Part 20

Migratory Bird Hunting; Proposed Frameworks for Late Season Migratory Bird Hunting Regulations; Proposed Rule

DEPARTMENT OF THE INTERIOR

Fish and Wildlife Service

50 CFR Part 20

[Docket No. FWS–R9–MB–2011–0014; 91200–1231–9BPP–L2]

RIN 1018–AX34

Migratory Bird Hunting; Proposed Frameworks for Late-Season Migratory Bird Hunting Regulations

AGENCY: Fish and Wildlife Service, Interior.

ACTION: Proposed rule; supplemental.

SUMMARY: The Fish and Wildlife Service (hereinafter Service or we) is proposing to establish the 2011–12 late-season hunting regulations for certain migratory game birds. We annually prescribe frameworks, or outer limits, for dates and times when hunting may occur and the number of birds that may be taken and possessed in late seasons. These frameworks are necessary to allow State selections of seasons and limits and to allow recreational harvest at levels compatible with population and habitat conditions.

DATES: You must submit comments on the proposed migratory bird hunting late-season frameworks by September 6, 2011.

ADDRESSES: You may submit comments on the proposals by one of the following methods:

- *Federal eRulemaking Portal: http://www.regulations.gov.* Follow the instructions for submitting comments on Docket No. FWS–R9–MB–2011–0014.
- *U.S. mail or hand-delivery:* Public Comments Processing, Attn: FWS–R9–MB–2011–0014; Division of Policy and Directives Management; U.S. Fish and Wildlife Service; 4401 N. Fairfax Drive, MS 2042–PDM; Arlington, VA 22203.

We will not accept e-mailed or faxed comments. We will post all comments on *http://www.regulations.gov.* This generally means that we will post any personal information you provide us (see the Public Comments section below for more information).

FOR FURTHER INFORMATION CONTACT: Ron W. Kokel, U.S. Fish and Wildlife Service, Department of the Interior, MS MBSP–4107–ARLSQ, 1849 C Street, NW., Washington, DC 20240; (703) 358–1714.

SUPPLEMENTARY INFORMATION:

Regulations Schedule for 2011

On April 8, 2011, we published in the **Federal Register** (76 FR 19876) a proposal to amend 50 CFR part 20. The proposal provided a background and overview of the migratory bird hunting regulations process, and addressed the establishment of seasons, limits, and other regulations for hunting migratory game birds under §§ 20.101 through 20.107, 20.109, and 20.110 of subpart K. Major steps in the 2011–12 regulatory cycle relating to open public meetings and **Federal Register** notifications were also identified in the April 8 proposed rule.

Further, we explained that all sections of subsequent documents outlining hunting frameworks and guidelines were organized under numbered headings. Those headings are:

1. Ducks
   A. General Harvest Strategy
   B. Regulatory Alternatives
   C. Zones and Split Seasons
   D. Special Seasons/Species Management
   i. September Teal Seasons
   ii. September Teal/Wood Duck Seasons
   iii. Black Ducks
   iv. Canvasbacks
   v. Pintails
   vi. Scaup
   vii. Mottled Ducks
   viii. Wood Ducks
   ix. Youth Hunt
   x. Mallard Management Units
   xi. Other
2. Sea Ducks
3. Mergansers
4. Canada Geese
   A. Special Seasons
   B. Regular Seasons
   C. Special Late Seasons
5. White-Fronted Geese
6. Brant
7. Snow and Ross's (Light) Geese
8. Swans
9. Sandhill Cranes
10. Coots
11. Moorhens and Gallinules
12. Rails
13. Snipe
14. Woodcock
15. Band-Tailed Pigeons
16. Doves
17. Alaska
18. Hawaii
19. Puerto Rico
20. Virgin Islands
21. Falconry
22. Other

Subsequent documents will refer only to numbered items requiring attention. Therefore, it is important to note that we will omit those items requiring no attention, and remaining numbered items will be discontinuous and appear incomplete.

On June 22, 2011, we published in the **Federal Register** (76 FR 36508) a second document providing supplemental proposals for early- and late-season migratory bird hunting regulations. The June 22 supplement also provided detailed information on the 2011–12 regulatory schedule and announced the SRC and Flyway Council meetings.

On June 22 and 23, 2011, we held open meetings with the Flyway Council Consultants at which the participants reviewed information on the current status of migratory shore and upland game birds and developed recommendations for the 2011–12 regulations for these species plus regulations for migratory game birds in Alaska, Puerto Rico, and the Virgin Islands; special September waterfowl seasons in designated States; special sea duck seasons in the Atlantic Flyway; and extended falconry seasons. In addition, we reviewed and discussed preliminary information on the status of waterfowl as it relates to the development and selection of the regulatory packages for the 2011–12 regular waterfowl seasons. On July 26, 2011, we published in the **Federal Register** (76 FR 44730) a third document specifically dealing with the proposed frameworks for early-season regulations. In late August 2011, we will publish a rulemaking establishing final frameworks for early-season migratory bird hunting regulations for the 2011–12 season.

On July 27–28, 2011, we held open meetings with the Flyway Council Consultants, at which the participants reviewed the status of waterfowl and developed recommendations for the 2011–12 regulations for these species. This document deals specifically with proposed frameworks for the late-season migratory bird hunting regulations. It will lead to final frameworks from which States may select season dates, shooting hours, areas, and limits.

We have considered all pertinent comments received through July 29, 2011, on the April 8 and June 22, 2011, rulemaking documents in developing this document. In addition, new proposals for certain late-season regulations are provided for public comment. The comment period is specified above under **DATES**. We will publish final regulatory frameworks for late-season migratory game bird hunting in the **Federal Register** on or around September 21, 2011.

Population Status and Harvest

The following paragraphs provide preliminary information on the status of waterfowl and information on the status and harvest of migratory shore and upland game birds excerpted from various reports. For more detailed information on methodologies and results, you may obtain complete copies of the various reports at the address indicated under **FOR FURTHER INFORMATION CONTACT** or from our Web

site at *http://www.fws.gov/migratorybirds/NewsPublicationsReports.html.*

Waterfowl Breeding and Habitat Survey

Federal, provincial, and State agencies conduct surveys each spring to estimate the size of breeding populations and to evaluate the conditions of the habitats. These surveys are conducted using fixed-wing aircraft, helicopters, and ground crews and encompass principal breeding areas of North America, covering an area over 2.0 million square miles. The traditional survey area comprises Alaska, Canada, and the northcentral United States, and includes approximately 1.3 million square miles. The eastern survey area includes parts of Ontario, Quebec, Labrador, Newfoundland, Nova Scotia, Prince Edward Island, New Brunswick, New York, and Maine, an area of approximately 0.7 million square miles.

Overall, habitat conditions during the 2011 Waterfowl Breeding Population and Habitat Survey were characterized by average to above-average moisture and a normal winter and spring across the traditional and eastern survey areas. The exception was the west-central portion of the traditional survey area that received below-average moisture. The total pond estimate (Prairie Canada and United States combined) was 8.1 ± 0.2 million. This was 22 percent above the 2010 estimate and 62 percent above the long-term average (1974–2010) of 5.0 ± 0.03 million ponds. The 2011 estimate of ponds in Prairie Canada was 4.9 ± 0.2 million. This was 31 percent above last year's estimate (3.7 ± 0.2 million) and 43 percent above the long-term average (1961–2010; 3.4 ± 0.03 million). The 2011 pond estimate for the north-central United States was 3.2 ± 0.1 million, which was similar to last year's estimate (2.9 ± 0.1 million) and 102 percent above the long-term average (1974–2010; 1.6 ± 0.02 million). Additional details of the 2011 Survey were provided in the July 26 **Federal Register** and are available from our Web site at *http://www.fws.gov/migratorybirds/NewsPublicationsReports.html.*

Breeding Population Status

In the traditional survey area, which includes strata 1–18, 20–50, and 75–77, the total duck population estimate was 45.6 ± 0.8 [SE] million birds. This estimate represents an 11 percent increase over last year's estimate of 40.9 ± 0.7 million birds and was 35 percent above the long-term average (1955–2010). Estimated mallard (*Anas platyrhynchos*) abundance was 9.2 ± 0.3 million birds, which was 9 percent above the 2010 estimate of 8.4 ± 0.3 million birds and 22 percent above the long-term average. Estimated abundance of gadwall (*A. strepera;* 3.3 ± 0.2 million) was similar to the 2010 estimate and 80 percent above the long-term average. Estimated abundance of American wigeon (*A. americana;* 2.1 ± 0.1 million) was 14 percent below the 2010 estimate and 20 percent below the long-term average. The estimated abundance of green-winged teal (*A. crecca*) was 2.9 ± 0.2 million, which was 17 percent below the 2010 estimate and 47 percent above their long-term average. The estimate of blue-winged teal abundance (*A. discors*) was 8.9 ± 0.4 million, which was 41 percent above the 2010 estimate and 91 percent above their long-term average. The estimate for northern pintails (*A. acuta;* 4.4 ± 0.3 million) was 26 percent above the 2010 estimate, and similar to the long-term average. The northern shoveler estimate (*A. clypeata*) was 4.6 ± 0.2 million, which was 14 percent above the 2010 estimate and 98 percent above the long-term average. Redhead abundance (*Aythya americana;* 1.4 ± 0.1 million) was 27 percent above the 2010 estimate and 106 percent above the long-term average. The canvasback estimate (A. valisineria; 0.7 ± 0.05 million) was similar to the 2010 estimate and 21 percent above the long-term average. Estimated abundance of scaup (*A. affinis* and *A. marila* combined; 4.3 ± 0.3 million) was similar to that of 2010 and 15 percent below the long-term average of 5.1 ± 0.05 million.

The eastern survey area was restratified in 2005 and is now composed of strata 51–72. Estimated abundance of mallards in the eastern survey area was 0.4 ± 0.1 million, which was similar to the 2010 estimate and the long-term average (1990–2010). Abundance estimates of green-winged teal, ring-necked duck (*A. collaris*), goldeneyes (common [*Bucephala clangula*] and Barrow's [*B. islandica*]), and mergansers (red-breasted [*Mergus serrator*], common [*M. merganser*], and hooded [*Lophodytes cucullatus*]) were all similar to their 2010 estimates and long-term averages. The American black duck (*Anas rubripes*) estimate was 0.55 ± 0.04 million, which was similar to the 2010 estimate and 13 percent below the long-term average of 0.63 million.

Fall Flight Estimate

The mid-continent mallard population is composed of mallards from the traditional survey area (revised in 2008 to exclude Alaska mallards), Michigan, Minnesota, and Wisconsin, and was estimated to be 11.9 ± 1.1 million birds. This was similar to the 2010 estimate of 10.3 ± 0.9 million in 2010.

See section 1.A. Harvest Strategy Considerations for further discussion of the implications of this information for this year's selection of the appropriate hunting regulations.

Status of Geese and Swans

We provide information on the population status and productivity of North American Canada geese (*Branta canadensis*), brant (*B. bernicla*), snow geese (*Chen caerulescens*), Ross's geese (*C. rossii*), emperor geese (*C. canagica*), white-fronted geese (*Anser albifrons*), and tundra swans (*Cygnus columbianus*). Production of arctic-nesting geese depends heavily upon the timing of snow and ice melt, and on spring and early summer temperatures. In 2011, snowmelt timing was average to slightly below average throughout most of the important goose breeding areas, and most of North America will see average, or slightly below-average, fall flights of geese this year. Conditions in the central Arctic, especially near Queen Maud Gulf, improved relative to last year's very late spring, so improved production of snow and Ross's geese and mid-continent white-fronted geese is expected. Gosling production of Canada goose populations that migrate to the Atlantic and Mississippi Flyways should generally be good in 2011, with the possible exceptions of the Eastern Prairie and Mississippi Valley populations. Conditions throughout Alaska and northwestern Canada were very good. As a result, Pacific Flyway white-fronted geese, brant, and most Canada geese experienced average to above-average production. Indices of wetland abundance in the Canadian and U.S. prairies in 2011 were generally excellent, and were particularly improved relative to 2010 in Canada. This likely improved nesting and brood rearing success of temperate-nesting Canada geese this year. However, flooding along many river systems may have destroyed some nests. Well-above or near-average wetland abundance in the United States and Canadian prairie regions and mild spring temperatures in many other temperate regions will likely improve production of Canada geese that nest at southern latitudes. Primary abundance indices decreased (>–10 percent) for 7 goose populations and increased (≤ 10 percent) for 10 goose populations from 2010 to 2011. Indices of 12 other populations remained similar among these years. Primary abundance indices decreased for western tundra swans and remained unchanged for eastern tundra swans. The following populations displayed

significant ($P < 0.05$) positive trends during the most recent 10-year period: Mississippi Flyway Giant, Short Grass Prairie, and Hi-line Canada geese; Western Arctic Wrangel Island and Western Central Flyway light geese; Pacific white-fronted geese and Pacific brant. Only the Atlantic Flyway Resident goose population showed a significant negative 10-year trend.

Waterfowl Harvest and Hunter Activity

National surveys of migratory bird hunters were conducted during the 2009 and 2010 hunting seasons. About 1.1 million waterfowl hunters harvested 13,139,800 (± 4 percent) ducks and 3,327,000 (± 5 percent) geese in 2009, and about 1.1 million waterfowl hunters harvested 14,796,700 (± 4 percent) ducks and 3,169,900 (± 5 percent) geese in 2010. Mallard, green-winged teal, gadwall, blue-winged/cinnamon teal, and wood duck (*Aix sponsa*) were the 5 most-harvested duck species in the United States, and Canada goose was the predominant species in the goose harvest. Coot hunters (about 31,100 in 2009 and 50,500 in 2010) harvested 219,000 (± 34 percent) coots in 2009 and 302,600 (± 50 percent) in 2010.

Review of Public Comments and Flyway Council Recommendations

The preliminary proposed rulemaking, which appeared in the April 8, 2011 **Federal Register**, opened the public comment period for migratory game bird hunting regulations. The supplemental proposed rule, which appeared in the June 22, 2011 **Federal Register**, discussed the regulatory alternatives for the 2011–12 duck hunting season. Late-season comments are summarized below and numbered in the order used in the April 8 and June 22 **Federal Register** documents. We have included only the numbered items pertaining to late-season issues for which we received written comments. Consequently, the issues do not follow in successive numerical or alphabetical order.

We received recommendations from all four Flyway Councils. Some recommendations supported continuation of last year's frameworks. Due to the comprehensive nature of the annual review of the frameworks performed by the Councils, support for continuation of last year's frameworks is assumed for items for which no recommendations were received. Council recommendations for changes in the frameworks are summarized below.

We seek additional information and comments on the recommendations in this supplemental proposed rule. New proposals and modifications to previously described proposals are discussed below. Wherever possible, they are discussed under headings corresponding to the numbered items in the April 8 and June 22, 2011 **Federal Register** documents.

1. Ducks

Categories used to discuss issues related to duck harvest management are: (A) Harvest Strategy Considerations, (B) Regulatory Alternatives, (C) Zones and Split Seasons, and (D) Special Seasons/Species Management. The categories correspond to previously published issues/discussion, and only those containing substantial recommendations are discussed below.

A. Harvest Strategy Considerations

Council Recommendations: The Atlantic, Central, and Pacific Flyway Councils and the Upper- and Lower-Region Regulations Committees of the Mississippi Flyway Council recommended the adoption of the ''liberal'' regulatory alternative.

Service Response: We continue to use Adaptive Harvest Management (AHM) protocols that allow hunting regulations to vary among Flyways in a manner that recognizes each Flyway's unique breeding-ground derivation of mallards. In 2008, we described and adopted a protocol for regulatory decision-making for the newly defined stock of western mallards (73 FR 43290; July 24, 2008). For the 2011 hunting season, we continue to believe that the prescribed regulatory choice for the Pacific Flyway should be based on the status of this western mallard breeding stock, while the regulatory choice for the Mississippi and Central Flyways should depend on the status of the recently redefined mid-continent mallard stock. We also recommend that the regulatory choice for the Atlantic Flyway continue to depend on the status of eastern mallards.

For the 2011 hunting season, we are continuing to consider the same regulatory alternatives as those used last year. The nature of the ''restrictive,'' ''moderate,'' and ''liberal'' alternatives has remained essentially unchanged since 1997, except that extended framework dates have been offered in the ''moderate'' and ''liberal'' regulatory alternatives since 2002. Also, in 2003, we agreed to place a constraint on closed seasons in the Mississippi and Central Flyways whenever the midcontinent mallard breeding-population size (as defined prior to 2008; traditional survey area plus Minnesota, Michigan, and Wisconsin) was > 5.5 million.

Optimal AHM strategies for the 2011–12 hunting season were calculated using: (1) Harvest-management objectives specific to each mallard stock; (2) the 2011 regulatory alternatives; and (3) current population models and associated weights for midcontinent, western, and eastern mallards. Based on this year's survey results of 9.46 million midcontinent mallards (traditional survey area minus Alaska plus Minnesota, Wisconsin, and Michigan), 4.89 million ponds in Prairie Canada, 798,413 western mallards (382,588 and 415,825 respectively in California-Oregon and Alaska) and 746,000 eastern mallards (strata 51–54, 56 and the northeastern United States), the prescribed regulatory choice for all four Flyways is the ''liberal'' alternative.

Therefore, we concur with the recommendations of the Atlantic, Mississippi, Central, and Pacific Flyway Councils regarding selection of the ''liberal'' regulatory alternative and propose to adopt the ''liberal'' regulatory alternative, as described in the June 22, 2011, **Federal Register**.

C. Zones and Split Seasons

In the August 25, 2010, proposed rule (75 FR 52398) and the September 23, 2010, final rule (75 FR 58250), we announced our intention to propose changes to the existing zone and split season guidelines for possible implementation in 2011 for use in State selections for the 2011–12 hunting seasons. In the April 8, 2011, proposed rule (76 FR 19876) we provided specific details of the previously announced proposed changes to the guidelines, announced the availability of a draft environmental assessment (EA) we prepared on the proposed changes to the guidelines, and provided a brief summary of the anticipated impacts of the preferred alternative. In the June 22 and July 26, 2011, proposed rules (76 FR 36508 and 76 FR 44730, respectively), we continued to discuss our April 8 proposal. This rule for the 2011–12 hunting season continues that discussion and announces our final decision on these guidelines.

Background

We annually issue regulations permitting the sport hunting of migratory birds. Zones and split seasons are ''special regulations'' designed to distribute hunting opportunities and harvests according to temporal, geographic, and demographic variability in waterfowl and other migratory game bird populations. For ducks, States have been allowed the option of dividing their allotted hunting days into two (or in some cases, three) segments to take

advantage of species-specific peaks of abundance or to satisfy hunters in different areas who want to hunt during the peak of waterfowl abundance in their area. However, the split-season option does not fully satisfy many States who wish to provide a more equitable distribution of harvest opportunities. Therefore, we also have allowed the establishment of independent seasons in two or more zones within States for the purpose of providing more equitable distribution of harvest opportunity for hunters throughout the State.

In 1978, we prepared an environmental assessment (EA) on the use of zones to set duck hunting regulations. A primary tenet of the 1978 EA was that zoning would be for the primary purpose of providing equitable distribution of duck hunting opportunities within a State or region and not for the purpose of increasing total annual waterfowl harvest in the zoned areas. In fact, target harvest levels were to be adjusted downward if they exceeded traditional levels as a result of zoning. Subsequently, we conducted a review of the use of zones and split seasons in 1990.

Currently, every 5 years, States are afforded the opportunity to change the zoning and split season configuration within which they set their annual duck hunting regulations. While the schedule of ''open seasons'' for making changes to splits and zones is being evaluated in the recently released draft supplemental environmental impact statement (SEIS) for the migratory bird hunting program (see NEPA Considerations in the April 8, 2011, proposed rule (76 FR 19876) for further information), the specific guidelines for choosing splits and zones are not a part of that evaluation. The current guidelines have remained unchanged since 1996.

Public Comments

The Flyway Council recommendations and public comments discussed below include recommendations and comments from both the 2010–11 regulatory process and the current 2011–12 regulatory process. Recommendations and comments from the 2010–11 regulatory process were included in the August 25, 2010, proposed rule (75 FR 52398) and the September 23, 2010, final rule (75 FR 58250).

Council Recommendations: Last year, the Atlantic, Central, and Pacific Flyway Councils recommended that the Service allow 3 zones, with 2-way splits in each zone, and 4 zones with no splits as additional zone/split-season options for duck seasons during 2011–15. The Upper- and Lower-Region Regulations Committees of the Mississippi Flyway Council recommended that the Service allow 3 zones with the season split into 2 segments in each zone, 4 zones with no splits, and 2 zones with the season split into 3 segments in each zone as additional zone/split-season options for duck seasons during 2011–15. In addition, all four Flyway Councils recommended that States with existing grandfathered status be allowed to retain that status.

This year, the Atlantic Flyway Council recommended allowing States two periods for selecting their zone and split options: spring 2011 for currently offered options, and spring 2012 for possible additional available options. The Mississippi Flyway Council, while urging us to provide new options for zones/split-season criteria for use during the 2011–12 regulations cycle season, noted, however, that some States may not be able to use these new criteria even if they are approved this spring because of their internal regulations-setting process. Thus, they requested extending the open season for States to select zone/split-season configurations through the 2012 regulations cycle. The Central and Pacific Flyway Councils recommended extending the current open season for States to select regular season zone/split configurations for 2011–15 through June 2012.

Written Comments in 2010: The National Flyway Council requested that the Service allow 3 zones, with 2-way splits in each zone, and 4 zones with no splits as additional zone/split-season options for duck seasons during 2011–15.

The Illinois Department of Natural Resources and the Wisconsin Department of Natural Resources requested that the Service allow 3 zones, with 2-way splits in each zone, and 4 zones with no splits as additional zone/split-season options for duck seasons during 2011–15.

The Delta Waterfowl Foundation, the Max McGraw Wildlife Foundation, the LaCrosse County Conservation Alliance, the Governor of Illinois, and several individuals expressed support for the Flyway Councils' recommended changes to the existing zone and split season guidelines.

Written Comments in 2011: The Mississippi and Central Flyway Councils and the States of Colorado, Illinois, Kansas, Nebraska, New York, Wisconsin and Wyoming expressed their support for our April 8 proposal to modify the zones and split season guidelines to allow up to four zones (no splits) and up to three zones with two splits, including all grandfathered arrangements. Both the Councils and States supported the extension of the open season for State selections of zone and split season configurations into the 2012–13 regulatory cycle. There was also widespread support for the creation of a Human Dimensions Working Group that is capable of advancing informed decision-making frameworks for explicitly considering human dimensions aspects of waterfowl management issues. The States appreciated our efforts to assess the potential impacts of changes in the criteria on duck harvest, and believed that such impacts would be minimal.

Six non-governmental organizations from Illinois and 106 individuals from Illinois, Ohio, and Wisconsin expressed support for the Flyway Councils' recommended changes to the guidelines. Twenty individuals did not support changing the guidelines, while four individuals supported the abolishment of zone and split season criteria all together.

Service Decision

In 1990, because of concerns about the proliferation of zones and split seasons for duck hunting, we conducted a cooperative review and evaluation of the historical use of zone/split options. This review did not show that the proliferation of these options had increased harvest pressure; however, the ability to detect the impact of zone/split configurations was poor because of unreliable response variables, the lack of statistical tests to differentiate between real and perceived changes, and the absence of adequate experimental controls. Consequently, we established guidelines to provide a framework for controlling the proliferation of changes in zone/split options. The guidelines identified a limited number of zone/split configurations that could be used for duck hunting and restricted the frequency of changes in these configurations to 5-year intervals.

In 1996, we revised the guidelines to provide States greater flexibility in using their zone/split arrangements. In 2005, in further response to recommendations from the Flyway Councils, we considered changes to the zone/split guidelines. After our review, however, we concluded that the current guidelines need not be changed. We further stated that the guidelines would be used for future open seasons (70 FR 55667; September 22, 2005).

However, while we continue to support the use of guidelines for providing a stable framework for controlling the number of changes to zone/split options, last August (75 FR

52398; August 25, 2010) we noted the consensus position among all the Flyway Councils on their proposal and expressed our sensitivity to the States' desires for flexibility in addressing concerns of the hunting public which, in part, provided the motivation for this recommendation. Furthermore, we also expressed our continued support of the recommendations from the 2008 Future of Waterfowl Management Workshop that called for a greater emphasis on the effects of management actions on the hunting public. Thus, we announced that we planned to propose that two specific additional options be added to the existing zone and split season criteria governing State selection of waterfowl zones and splits. The additional options would include four zones with no splits and three zones with the option for 2-way (2-segment) split seasons in one, two, or all three zones. Otherwise, the criteria and rules governing the application of those criteria would remain unchanged.

When we announced our intention to propose adding the Flyway Councils' recommended two options to the existing zone and split season guidelines, we also stated that we needed additional time to explore all the possible implications and impacts of such changes in the zone and split season guidelines in order to provide the public with all the necessary information for their consideration and comment. We also noted that existing human dimensions data on the relationship of harvest regulations, and specifically zones and splits, to hunter recruitment, retention, and/or satisfaction are equivocal or lacking. In the face of uncertainty over the effects of management actions, the waterfowl management community has broadly endorsed adaptive management and the principles of informed decision-making as a means of accounting for and reducing that uncertainty. The necessary elements of informed decision-making include: clearly articulated objectives, explicit measurable attributes for objectives, identification of a suite of potential management actions, some means of predicting the consequences of management actions with respect to stated objectives, and, finally, a monitoring program to compare observations with predictions as a basis for learning, policy adaptation, and more informed decision-making. Currently, none of these elements are used to support decision-making that involves human dimensions considerations. Because the Flyways indicated that additional zone/split options were important for addressing hunter recruitment, retention, and satisfaction issues, we saw this proposed change as an opportunity to advance an informed decision-making framework that explicitly considers human dimensions issues.

To that end, we requested that the National Flyway Council marshal the expertise and resources of the Human Dimensions Working Group to develop explicit human dimensions objectives related to expanding zone and split options and a study plan to evaluate the effect of the proposed action in achieving those objectives. It was our hope that the study plan would include hypotheses and specific predictions about the effect of changing zone/split criteria on stated human dimensions objectives, and monitoring and evaluation methods that would be used to test those predictions. We stated that we believed that insights gained through such an evaluation would be invaluable in furthering the ongoing dialogue regarding fundamental objectives of waterfowl management and an integrated and coherent decision framework for advancing those objectives. We further stated that we would review the objectives and study plan at our February 2011 SRC meeting and consider this plan, along with public and Flyway comments on the proposed change to the zones and splits criteria, along with any required National Environmental Policy Act (NEPA; 42 U.S.C. 4321 *et seq.*) analysis, in making a final decision on a course of action in 2011.

We reviewed the objectives and the study plan at our February 2011 SRC meeting and our June 22–23 SRC meeting and detailed our review in the July 26 proposed rule. At that time, we stated that while we remained supportive of the Flyway Councils' desire to expand the existing zone and split season criteria, the adequacy of the National Flyway Council's human dimensions study design that we required last year (75 FR 58250; September 23, 2010) as part of our initial intent and proposal still did not meet our expectations. Thus, the Councils and the Service committed to form a smaller working group to help resolve these differences, and that we would consider a revised study proposal as soon as it was available. Further, assuming an acceptable study plan could be agreed upon, we would consider offering the expanded zone/split criteria to States in both the current year's regulation cycle and again in the 2012–13 regulations cycle.

Consequently, since the June 22–23 SRC meeting, the four Flyway Councils and the National Flyway Council submitted a revised study plan to examine the human dimensions aspects of revisions to the zones and split season criteria. This new study plan meets the original objectives laid out in the August 25, 2010, and the September 23, 2010, rules and we support the Flyway Councils' recommendation to expand the criteria to allow two additional options that States may use to configure duck zones and split seasons within their boundaries. Further, we appreciate the efforts of the four Flyway Councils and the National Flyway Council to revise the study plan to examine the human dimensions aspects of this issue.

As we have previously stated, those States that are capable of implementing these new guidelines this year may do so. However, for those States not able to implement changes this year, we are committed to extending the current open season into 2012, and we ask that States provide us with any changes to their zone and split season configuration by May 1, 2012, for use during the 2012–13 season. After this open period, the next regularly-scheduled open season for changes to zone and split season configurations will be in 2016, for use during the 2016–20 period. In order to allow sufficient time for States to solicit public input regarding their selections of zone and split season configurations in 2016, we will reaffirm the criteria during the 2015 late-season regulations process. At that time we will notify States that changes to zone and split season configurations should be provided to the Service by May 1, 2016.

Guidelines for Duck Zones and Split Seasons

The following zone/split-season guidelines apply only for the *regular* duck season:

(1) A zone is a geographic area or portion of a State, with a contiguous boundary, for which independent dates may be selected for the regular duck season.

(2) Consideration of changes for management-unit boundaries is not subject to the guidelines and provisions governing the use of zones and split seasons for ducks.

(3) Only minor (less than a county in size) boundary changes will be allowed for any grandfathered arrangement, and changes are limited to the open season.

(4) Once a zone/split option is selected during an open season, it must remain in place for the following 5 years.

Any State may continue the configuration used in the previous

5-year period. If changes are made, the zone/split-season configuration must conform to one of the following options:

(1) No more than four zones with no splits,

(2) Split seasons (no more than 3 segments) with no zones, or

(3) No more than three zones with the option for 2-way (2-segment) split seasons in one, two, or all zones.

Grandfathered Zone/Split Arrangements

When we first implemented the zone/split guidelines in 1991, several States had completed experiments with zone/split arrangements different from our original options. We offered those States a one-time opportunity to continue (''grandfather'') those arrangements, with the stipulation that only minor changes could be made to zone boundaries. If any of those States now wish to change their zone/split arrangement:

(1) The new arrangement must conform to one of the 3 options identified above; and

(2) The State cannot go back to the grandfathered arrangement that it previously had in place.

Management Units

We will continue to utilize the specific limitations previously established regarding the use of zone and split seasons in special management units, including the High Plains Mallard Management Unit. We note that the original justification and objectives established for the High Plains Mallard Management Unit provided for additional days of hunting opportunity at the end of the regular duck season. In order to maintain the integrity of the management unit, current guidelines prohibit simultaneous zoning and/or 3-way split seasons within a management unit and the remainder of the State. Removal of this limitation would allow additional proliferation of zone/split configurations and compromise the original objectives of the management unit.

Impacts of Proposed Change

We prepared an EA on the proposed zone and split season guidelines and provide a brief summary of the anticipated impacts of the preferred alternative with regard to the guidelines. Specifics of each of the four alternatives we analyzed can be found on our Web site at *http://www.fws.gov/migratorybirds,* or at *http://www.regulations.gov.*

In summary, we anticipate that the proposed changes to the guidelines, specifically adopting the preferred alternative, would result in an increase in the number of exposure days (days in which ducks are exposed to hunting) throughout a hunting season, but would vary by Flyway. Whereas the maximum potential impact on duck harvest may be small in some Flyways (*e.g.,* < 3 percent increase in the Pacific Flyway), the impact in other Flyways may be much higher (*e.g.,* up to 25 percent in the Mississippi Flyway). More specifically, regression analysis of the number of duck exposure days and number of duck zones within a State indicated that the addition of one zone in all States (excluding grandfathered States) could result in up to a 17 percent increase in the national duck harvest (or approximately 2.2 million birds) above the ''no change'' alternative (13.8 million ducks). It is important to note that this estimate is for total duck harvest nationwide, and we would expect the potential percentage increases to vary among Flyways, States, and species. Additionally, we recognize that our analysis utilizes assumptions that may not be fully realized during implementation of the new guidelines. For example, our analysis assumes that all States that are eligible to make changes to their zones-splits configurations will actually make such changes. However, many States have indicated that they will not avail themselves of new options available to them. This would lower the realized increase in harvest in a particular Flyway; thus, the magnitude of any potential increase in harvest would likely be lower than the estimated 17 percent.

Additionally, we annually prepare a biological opinion under section 7 of the Endangered Species Act of 1973, as amended (16 U.S.C. 1531 *et seq.*), prior to establishing annual hunting regulations for migratory birds. Regulations promulgated as a result of this consultation remove or alleviate chances of conflict between seasons for migratory game birds and endangered and threatened species and their critical habitats.

We also do not believe the preferred alternative would recruit new hunters, and therefore hunter numbers would probably remain similar to 2008 levels, when the last economic analysis was conducted. However, if increasing the possible number of zones and split season configurations encourages current hunters to spend more days afield, we would expect a slight increase in expenditures. Therefore, the national estimate of the consumer surplus expected under this alternative may be slightly higher than the estimate of $317 million annually (range of $274 million to $362 million [2007$]) that we would expect under the ''no change'' alternative. In general, the non-hunting public has not expressed an opinion about zoning and split seasons in the past. Within this large group, individuals opposed to hunting will likely object to increased zoning and/or split seasons if they believe it will enhance or encourage hunting. Others generally favor more restrictive regulations, and some further believe that all hunting should be discontinued. We note that the four Flyway Councils support the preferred alternative. Duck hunter numbers would likely be similar to that of 2008, which would maintain the current level of revenues to the States and Service through sales of waterfowl hunting licenses and duck stamps. While this alternative potentially could increase hunter expenditures above the current level of $1.2 billion (2007$), we have no specific information available that would allow an accurate estimation of this increase. However, we believe any potential increase would likely be negligible.

The EA and Finding of No Significant Impact (FONSI) is available by either writing to the address indicated under **FOR FURTHER INFORMATION CONTACT** in the preamble of this proposed rule or by viewing on our Web site at *http://www.fws.gov/migratorybirds,* or at *http://www.regulations.gov.*

Response to Other Comments

With regard to abolishing the zones and splits criteria, we disagree. Implementation of the criteria for zones and splits was meant to stem the increasing proliferation of zoning and split seasons, which complicated the assessment of the impacts of harvest regulations on duck populations. We believe the use of zoning criteria provides a certain level of stability to duck regulations, which enhance the assessment of the impacts of other regulations (*e.g.,* season length and bag limit) on duck populations.

D. Special Seasons/Species Management

iii. Black Ducks

In 2008, U.S. and Canadian waterfowl managers developed an interim harvest strategy that will be employed by both countries until a formal strategy based on the principles of AHM is completed. We detailed this interim strategy in the July 24, 2008, **Federal Register** (73 FR 43290). The interim harvest strategy is prescriptive, in that it calls for no substantive changes in hunting regulations unless the black duck breeding population, averaged over the most recent 3 years, exceeds or falls

below the long-term average breeding population by 15 percent or more. The strategy is designed to share the black duck harvest equally between the two countries; however, recognizing incomplete control of harvest through regulations, it will allow realized harvest in either country to vary between 40 and 60 percent.

Each year in November, Canada publishes its proposed migratory bird hunting regulations for the upcoming hunting season. Thus, last fall the Canadian Wildlife Service (CWS) used the interim strategy to establish its proposed black duck regulations for the 2011–12 season, based on the most current data available at that time: breeding population estimates for 2008, 2009, and 2010, and an assessment of parity based on harvest estimates for the 2005–09 hunting seasons. Although updates of both breeding population estimates and harvest estimates are now available, the United States will base its 2011–12 black duck regulations on the same data CWS used, to ensure comparable application of the strategy. The long-term (1998–2007) breeding population mean estimate is 929,100, and the 2008–10, 3-year running mean estimate is 858,300. From 2005–09, 45 percent of the black duck harvest occurred in Canada and 55 percent in the United States; this falls within the accepted parity bounds of 40 and 60 percent. Based on these estimates, no restriction or liberalization of black duck harvest is warranted.

iv. Canvasbacks

Council Recommendations: The Atlantic, Central, and Pacific Flyway Councils and the Upper- and Lower-Region Regulations Committees of the Mississippi Flyway Council recommended a full season for canvasbacks with a 1-bird daily bag limit. Season lengths would be 60 days in the Atlantic and Mississippi Flyways, 74 days in the Central Flyway, and 107 days in the Pacific Flyway.

Service Response: Since 1994, we have followed a canvasback harvest strategy that if canvasback population status and production are sufficient to permit a harvest of one canvasback per day nationwide for the entire length of the regular duck season, while still attaining a projected spring population objective of 500,000 birds, the season on canvasbacks should be opened. A partial season would be permitted if the estimated allowable harvest was within the projected harvest for a shortened season. If neither of these conditions can be met, the harvest strategy calls for a closed season on canvasbacks nationwide. In 2008 (73 FR 43290; July 24, 2008), we announced our decision to modify the Canvasback Harvest Strategy to incorporate the option for a 2-bird daily bag limit for canvasbacks when the predicted breeding population the subsequent year exceeds 725,000 birds.

This year's spring survey resulted in an estimate of 692,000 canvasbacks. This was statistically similar to the 2010 estimate of 585,000 canvasbacks and 21 percent above the 1955–2010 average. The estimate of ponds in Prairie Canada was 4.9 million, which was 31 percent above last year and 43 percent above the long-term average. Based on updated harvest predictions using data from recent hunting seasons, the canvasback harvest strategy predicts a 2012 canvasback population of 756,000 birds under a liberal duck season with a 1-bird daily bag limit and 697,000 with a 2-bird daily bag limit. Because the predicted 2012 population under the 1-bird daily bag limit is greater than 500,000, while the prediction under the 2-bird daily bag limit is less than 725,000, the canvasback harvest strategy stipulates a full canvasback season with a 1-bird daily bag limit for the upcoming season.

v. Pintails

Council Recommendations: The Atlantic, Central, and Pacific Flyway Councils and the Upper- and Lower-Region Regulations Committees of the Mississippi Flyway Council recommended a full season for pintails, consisting of a 2-bird daily bag limit and a 60-day season in the Atlantic and Mississippi Flyways, a 74-day season in the Central Flyway, and a 107-day season in the Pacific Flyway.

Service Response: The current derived pintail harvest strategy was adopted by the Service and Flyway Councils in 2010 (75 FR 44856; July 29, 2010). For this year, optimal regulatory strategies were calculated with: (1) An objective of maximizing long-term cumulative harvest, including a closed-season constraint of 1.75 million birds, (2) the regulatory alternatives and associated predicted harvest, and (3) current population models and their relative weights. Based on this year's survey results of 4.43 million pintails observed and a mean latitude of 51.7, the optimal regulatory choice for all four Flyways is the ''liberal'' alternative with a 2-bird daily bag limit.

vi. Scaup

Council Recommendations: The Atlantic, Central, and Pacific Flyway Councils and the Upper- and Lower-Region Regulations Committees of the Mississippi Flyway Council recommended use of the ''moderate'' regulation package, consisting of a 60-day season with a 2-bird daily bag in the Atlantic and Mississippi Flyways, a 74-day season with a 2-bird daily bag limit in the Central Flyway, and an 86-day season with a 3-bird daily bag limit in the Pacific Flyway.

Service Response: In 2008, we adopted and implemented a new scaup harvest strategy (73 FR 43290 on July 24, 2008, and 73 FR 51124 on August 29, 2008) with initial ''restrictive,'' ''moderate,'' and ''liberal'' regulatory packages adopted for each Flyway. Further opportunity to revise these packages was afforded prior to the 2009–10 season and modifications by the Mississippi and Central Flyway Councils were endorsed by the Service in July 2009 (74 FR 36870; July 24, 2009). These packages will remain in effect for at least 3 years prior to their re-evaluation.

The 2011 breeding population estimate for scaup is 4.32 million, up 2 percent from, but statistically similar to, the 2010 estimate of 4.24 million. Total estimated scaup harvest for the 2010–11 season was 358,000 birds. Based on updated model parameter estimates, the optimal regulatory choice for scaup is the ''moderate'' package in all four Flyways.

vii. Mottled Ducks

Council Recommendations: The Central Flyway Council recommended removal of the restriction in Texas requiring a 5-day delay in the opening date of the mottled duck season from the opening of the general duck season (*i.e.,* must be closed the first 5 days of the duck season).

Service Response: We remain concerned about the status of mottled ducks, particularly those in the Western Gulf Coast Population (WGCP). In 2009, the Central and Mississippi Flyways implemented restrictions in either bag limit or season length in an attempt to achieve harvest reductions we believed were appropriate given the status of those mottled ducks. In the Central Flyway, the restrictions included a delay of 5 days in the opening date when dusky ducks (mottled duck, black duck and their hybrids, or Mexican-like duck) may be taken in Texas. Although the harvest estimates associated with those restrictions did not achieve the targeted 30 percent reduction, the reduction approached what we believed was appropriate for the current status of the WGCP. Therefore, we do not support removal of this restriction and believe that regulations in effect for the last two hunting seasons are appropriate for the 2011–12 season, including the delay in

the opening date in which dusky ducks may be taken in Texas.

xii. Other

Council Recommendations: The Central Flyway Council and the Upper-Region Regulations Committee of the Mississippi Flyway Council recommended that the daily and possession bag limits for redheads during the 2011–12 duck hunting season be 3 and 6, respectively.

Service Response: While we recognize the desire to provide additional hunting opportunity for redheads, at this time we do not support the recommendations to increase the daily bag limit of redheads from 2 to 3 birds. As we have done with other species (such as canvasbacks, pintails, *etc.*), we believe that changes to redhead daily bag limits should only be considered with guidance from an agreed-upon harvest strategy that is supported by all four Flyway Councils and the Service. Thus, we suggest that the Flyways work collaboratively to develop a redhead harvest strategy, which would include: (1) Clearly defined and agreed-upon management objectives; (2) clearly defined regulatory alternatives; and (3) a model that can be used to predict population responses to harvest mortality. If the development of a harvest strategy for redheads is a priority for the Flyways, a conceptual framework for a redhead harvest strategy could be discussed at the Harvest Management Working Group meeting in November 2011. However, we note that if the Flyway Councils wish to implement a redhead harvest strategy for the 2012–13 season, a draft strategy needs to be available for review and discussion by the February 2012 Service Regulations Committee (SRC) meeting, finalized by the Flyways Councils at their March 2012 meetings, and forwarded as a recommendation for SRC consideration at the early season SRC meeting (June 2012).

4. Canada Geese

B. Regular Seasons

Council Recommendations: The Central Flyway Council recommended increasing the Canada goose daily bag limit from 3 to 5 geese in the east-tier States.

The Pacific Flyway Council recommended several changes to dark goose season frameworks. More specifically, they recommended:

1. Within the basic dark goose bag limit for California, Oregon, and Washington: remove the dark goose bag limit exception for Oregon of not more than one cackling Canada or Aleutian Canada geese per day.

2. Within the Northwest Special Permit Zone for Oregon: increase the dark goose bag limit exception of not more than 2 cackling Canada or Aleutian Canada geese per day to not more than 3 cackling Canada or Aleutian Canada geese per day.

3. Within the Tillamook County Management Area of the Northwest Special Permit Zone for Oregon: increase the dark goose bag limit from not more than 3 per day, including not more than 2 cackling Canada or Aleutian Canada geese, to not more than 4 per day, provided this total include not more than 3 cackling Canada or Aleutian Canada geese.

4. Within the Northwest Zone for Oregon: restrict the bag limit for cackling Canada and Aleutian Canada geese to not more than 3 cackling Canada or Aleutian Canada geese per day within the overall daily dark goose bag limit of not more than 4 per day.

5. Within the South Coast Zone for Oregon: remove the dark goose bag limit exception, within the basic dark goose bag limit, of up to 4 cackling Canada and Aleutian Canada geese per day.

6. Within the Southwest Zone for Oregon: remove the dark goose bag limit exception, within the basic dark goose bag limit, of up to 4 cackling Canada and Aleutian Canada geese per day.

7. In Washington's Areas 2A and 2B (Southwest Quota Zone): increase the daily bag limit from 2 to 3 cackling geese.

8. In California's Northeastern Zone: remove the restrictions on small Canada geese (Aleutian and cackling geese).

9. Increase the daily bag limit for Canada geese in the Pacific Flyway portion of Colorado from 3 birds to 4 birds, and possession limit from 6 to 8 birds.

10. In Idaho, consolidate the current goose zones to correspond with duck hunting zones.

Service Response: We do not support the Central Flyway Council's recommendation to increase the dark goose daily bag limit in the east-tier States from 3 to 5 geese. While we agree that the Flyway's proposed bag limit increase would likely result in an increased harvest of resident Canada geese (Great Plains Population), there are other Canada goose populations that would also be subjected to additional harvest pressure, including the Tall Grass Prairie (TGP), Western Prairie, and the Eastern Prairie populations. We recognize the continuing problems posed by increasing numbers of resident Canada geese and that migrant populations of Canada geese in the Central Flyway are above objective levels. We also understand the Flyway's desire to provide as much hunting opportunity on these geese as possible, and we share the philosophy that hunting, not control permits, should be the primary tool used to manage populations of game birds. However, we also recognize that hunting is not necessarily the most appropriate or effective tool to address these issues in all areas. Although States have used some of the additional tools provided to them through annual hunting regulations, Statewide Special Canada goose permits, and implementation of the preferred alternative in the Resident Canada Goose Environmental Impact Statement, we believe several of these tools are not being used to the extent available. Thus, we encourage the States to work with Service staff to better identify the most appropriate tool, or tools, for the various situations and conflicts in the affected States. Further, as we stated last year (75 FR 58250; September 23, 2010), we believe that more progress needs to be made regarding monitoring Canada goose populations in east-tier States, as well as collaboration with the Mississippi Flyway regarding impacts to shared goose resources, including progress on a revision to the TGP Population Management Plan. We would consider increasing bag limits in the future if progress is made on these fronts, particularly on the management plan.

We support all of the Pacific Flyway goose recommendations. Originally, Oregon's Tillamook County Management Area was established to provide protection for Aleutian Canada geese originating from Semidi Island, Alaska. Modification of the closure area, as proposed by the Council, will reduce the closure area by approximately 22 percent. However, the Council notes that the original closure area included non-goose use areas and the refuge recommended reducing the closure area as the Semidi Island birds do not use the entire closure area. Most of the proposed newly open area constitutes agricultural lands, primarily dairy pastures and hay fields, and opening these lands to goose hunting is expected to help relieve depredations caused by wintering geese. While we expect goose harvest in the Management Area to increase due to this proposed change, harvest will continue to be monitored by check station and goose distribution and collar surveys, focused on Semidi birds.

The recommendations for removal of small Canada goose restrictions in eastern Oregon and for 1-bird daily bag limit increases to address agricultural

damage issues in Oregon and Washington are not expected to increase harvest of these populations substantially. We believe these populations are at levels that can sustain these minor increases in harvest without jeopardy to their long-term sustainability. However, we note that long-term solutions to agricultural depredation issues will not be completely addressed through harvest regulations and encourage the States of the Pacific Flyway to continue to work to implement the other approaches detailed in the Flyway's Canada goose depredation plan.

The proposed removal of within bag limit restrictions on small Canada geese (Aleutian and cackling Canada geese) in California's Northeastern Zone is intended to simplify goose hunting regulations and we expect little or no increase in harvest. Few, if any, Aleutian geese occur in that portion of California and despite restrictive daily bag limits, the abundance of cackling geese in the Klamath Basin has declined from the tens of thousands in the late 1990s to essentially zero in recent years as cackling goose distribution has shifted northward. However, since that time, the Aleutian Canada goose population has grown from less than 1,000 birds in 1976 to over 110,000 in 2011.

Regarding the proposed increase in the daily bag limit in Colorado from 3 to 4 Canada geese, we note that removal of this more restrictive bag limit makes it consistent with most of the remainder of the flyway. Further, population measurement data support an increase in the bag limit as counts from both the spring breeding survey and post-hunting indices have increased over the last 3 years.

In Idaho, the recommendation to consolidate the current goose zones to correspond with duck hunting zones is intended to reduce regulatory complexity in State and Federal regulations. We have no issue with this recommendation.

C. Special Late Seasons

Council Recommendations: The Atlantic Flyway Council recommended changing Rhode Island's experimental late Canada goose season status to operational.

Service Response: We agree with the Council's recommendation to change the status of Rhode Island's late Canada goose season from experimental to operational. Based on band recovery data submitted by the Council, there were no direct recoveries of migrant geese and the special late season meets the established criteria for special Canada goose seasons of <20 percent migrant harvest. Further, between 1997–2011, only 7 banded Canada geese recovered were migrants (all of which were indirect recoveries).

5. White-Fronted Geese

Council Recommendations: The Mississippi and Central Flyway Councils recommended that the white-fronted goose season option of a 72-day season be increased to 74 days and the 86-day season option be increased to 88 days. Daily bag limits associated with each season option would remain unchanged.

The Pacific Flyway Council recommended extending the latest closing date for white-fronted geese in California's Sacramento Valley Special Management Zone to December 28 and in California's Balance of State Zone to March 10.

Service Response: We support the 2-day increase in the season length in the Mississippi and Central Flyways. These increases are consistent with the newly revised management plan for mid-continent white-fronted geese.

We also support the Pacific Flyway Councils recommendations to extend the framework closing dates in California's Balance of State Zone and the Sacramento Valley Special Management Area (SMA). In the Balance of State Zone, expanding the framework closing date to March 10 is intended to allow additional hunting opportunity and potentially reduce goose crop depredation complaints. The Council notes that the white-fronted goose population is currently about 700,000 birds and above the population goal of 300,000 birds. In the SMA, extending the closing date to December 28 is expected to increase the harvest of Pacific white-fronted geese while still protecting the less numerous Tule subspecies. Tule Greater white-fronted geese currently number approximately 14,578 based on preliminary indirect population estimates. However, overlapping this relatively small number of Tule geese are burgeoning populations of Pacific Greater white-fronted geese within the SMA. The Council estimates that the harvest of Tule geese are low, as determined by measurements of hunter-harvested white-fronted geese at public hunting areas within the SMA; and the range of hunter-harvested adult Tule geese at the public hunt areas in the SMA since 1999 has ranged from a low of 13 (2005–06) to a high of 86 (2000–01). We agree with the Council's assessment.

Public Comments

The Department of the Interior's policy is, whenever possible, to afford the public an opportunity to participate in the rulemaking process. Accordingly, we invite interested persons to submit written comments, suggestions, or recommendations regarding the proposed regulations. Before promulgating final migratory game bird hunting regulations, we will consider all comments we receive. These comments, and any additional information we receive, may lead to final regulations that differ from these proposals. You may submit your comments and materials concerning this proposed rule by one of the methods listed in the **ADDRESSES** section. We will not accept comments sent by e-mail or fax. We will not consider hand-delivered comments that we do not receive, or mailed comments that are not postmarked, by the date specified in the **DATES** section. We will post all comments in their entirety—including your personal identifying information—on *http://www.regulations.gov.* Before including your address, phone number, e-mail address, or other personal identifying information in your comment, you should be aware that your entire comment—including your personal identifying information—may be made publicly available at any time. While you can ask us in your comment to withhold your personal identifying information from public review, we cannot guarantee that we will be able to do so.

Comments and materials we receive, as well as supporting documentation we used in preparing this proposed rule, will be available for public inspection on *http://www.regulations.gov,* or by appointment, during normal business hours, at the U.S. Fish and Wildlife Service, Division of Migratory Bird Management, Room 4107, 4501 North Fairfax Drive, Arlington, VA 22203. For each series of proposed rulemakings, we will establish specific comment periods. We will consider, but possibly may not respond in detail to, each comment. As in the past, we will summarize all comments we receive during the comment period and respond to them after the closing date in the preambles of any final rules.

Required Determinations

Based on our most current data, we are affirming our required determinations made in the April 8 proposed rule; for descriptions of our actions to ensure compliance with the following statutes and Executive Orders,

see our April 8, 2011, proposed rule (76 FR 19876):

- National Environmental Policy Act (NEPA) Consideration;
- Endangered Species Act Consideration;
- Regulatory Flexibility Act;
- Small Business Regulatory Enforcement Fairness Act;
- Paperwork Reduction Act;
- Unfunded Mandates Reform Act;
- Executive Orders 12630, 12866, 12988, 13132, 13175, and 13211.

List of Subjects in 50 CFR Part 20

Exports, Hunting, Imports, Reporting and recordkeeping requirements, Transportation, Wildlife.

The rules that eventually will be promulgated for the 2011–12 hunting season are authorized under 16 U.S.C. 703–712 and 16 U.S.C. 742 a–j.

Dated: August 15, 2011.

Jane Lyder,

Acting Assistant Secretary for Fish and Wildlife and Parks.

Proposed Regulations Frameworks for 2011–12 Late Hunting Seasons on Certain Migratory Game Birds

Pursuant to the Migratory Bird Treaty Act and delegated authorities, the Department of the Interior approved the following proposals for season lengths, shooting hours, bag and possession limits, and outside dates within which States may select seasons for hunting waterfowl and coots between the dates of September 1, 2011, and March 10, 2012. These frameworks are summarized below.

General

Dates: All outside dates noted below are inclusive.

Shooting and Hawking (taking by falconry) Hours: Unless otherwise specified, from one-half hour before sunrise to sunset daily.

Possession Limits: Unless otherwise specified, possession limits are twice the daily bag limit.

Permits: For some species of migratory birds, the Service authorizes the use of permits to regulate harvest or monitor their take by sport hunters, or both. In many cases (*e.g.,* tundra swans, some sandhill crane populations), the Service determines the amount of harvest that may be taken during hunting seasons during its formal regulations-setting process, and the States then issue permits to hunters at levels predicted to result in the amount of take authorized by the Service. Thus, although issued by States, the permits would not be valid unless the Service approved such take in its regulations.

These Federally authorized, State-issued permits are issued to individuals, and only the individual whose name and address appears on the permit at the time of issuance is authorized to take migratory birds at levels specified in the permit, in accordance with provisions of both Federal and State regulations governing the hunting season. The permit must be carried by the permittee when exercising its provisions and must be presented to any law enforcement officer upon request. The permit is not transferrable or assignable to another individual, and may not be sold, bartered, traded, or otherwise provided to another person. If the permit is altered or defaced in any way, the permit becomes invalid.

Flyways and Management Units

Waterfowl Flyways

Atlantic Flyway—includes Connecticut, Delaware, Florida, Georgia, Maine, Maryland, Massachusetts, New Hampshire, New Jersey, New York, North Carolina, Pennsylvania, Rhode Island, South Carolina, Vermont, Virginia, and West Virginia.

Mississippi Flyway—includes Alabama, Arkansas, Illinois, Indiana, Iowa, Kentucky, Louisiana, Michigan, Minnesota, Mississippi, Missouri, Ohio, Tennessee, and Wisconsin.

Central Flyway—includes Colorado (east of the Continental Divide), Kansas, Montana (Counties of Blaine, Carbon, Fergus, Judith Basin, Stillwater, Sweetgrass, Wheatland, and all counties east thereof), Nebraska, New Mexico (east of the Continental Divide except the Jicarilla Apache Indian Reservation), North Dakota, Oklahoma, South Dakota, Texas, and Wyoming (east of the Continental Divide).

Pacific Flyway—includes Alaska, Arizona, California, Idaho, Nevada, Oregon, Utah, Washington, and those portions of Colorado, Montana, New Mexico, and Wyoming not included in the Central Flyway.

Management Units

High Plains Mallard Management Unit—roughly defined as that portion of the Central Flyway that lies west of the 100th meridian.

Definitions

For the purpose of hunting regulations listed below, the collective terms ''dark'' and ''light'' geese include the following species:

Dark geese: Canada geese, white-fronted geese, brant (except in California, Oregon, Washington, and the Atlantic Flyway), and all other goose species except light geese.

Light geese: Snow (including blue) geese and Ross's geese.

Area, Zone, and Unit Descriptions: Geographic descriptions related to late-season regulations are contained in a later portion of this document.

Area-Specific Provisions: Frameworks for open seasons, season lengths, bag and possession limits, and other special provisions are listed below by Flyway.

Waterfowl Seasons in the Atlantic Flyway

In the Atlantic Flyway States of Connecticut, Delaware, Maine, Maryland, Massachusetts, New Jersey, North Carolina, Pennsylvania, and Virginia, where Sunday hunting is prohibited statewide by State law, all Sundays are closed to all take of migratory waterfowl (including mergansers and coots).

Special Youth Waterfowl Hunting Days

Outside Dates: States may select 2 days per duck-hunting zone, designated as ''Youth Waterfowl Hunting Days,'' in addition to their regular duck seasons. The days must be held outside any regular duck season on a weekend, holidays, or other non-school days when youth hunters would have the maximum opportunity to participate. The days may be held up to 14 days before or after any regular duck-season frameworks or within any split of a regular duck season, or within any other open season on migratory birds.

Daily Bag Limits: The daily bag limits may include ducks, geese, tundra swans, mergansers, coots, moorhens, and gallinules and would be the same as those allowed in the regular season. Flyway species and area restrictions would remain in effect.

Shooting Hours: One-half hour before sunrise to sunset.

Participation Restrictions: Youth hunters must be 15 years of age or younger. In addition, an adult at least 18 years of age must accompany the youth hunter into the field. This adult may not duck hunt but may participate in other seasons that are open on the special youth day. Tundra swans may only be taken by participants possessing applicable tundra swan permits.

Atlantic Flyway

Ducks, Mergansers, and Coots

Outside Dates: Between the Saturday nearest September 24 (September 24) and the last Sunday in January (January 29).

Hunting Seasons and Duck Limits: 60 days. The daily bag limit is 6 ducks, including no more than 4 mallards (2 hens), 1 black duck, 2 pintails, 1

mottled duck, 1 fulvous whistling duck, 3 wood ducks, 2 redheads, 2 scaup, 1 canvasback, and 4 scoters.

Closures: The season on harlequin ducks is closed.

Sea Ducks: Within the special sea duck areas, during the regular duck season in the Atlantic Flyway, States may choose to allow the above sea duck limits in addition to the limits applying to other ducks during the regular duck season. In all other areas, sea ducks may be taken only during the regular open season for ducks and are part of the regular duck season daily bag (not to exceed 4 scoters) and possession limits.

Merganser Limits: The daily bag limit of mergansers is 5, only 2 of which may be hooded mergansers. In States that include mergansers in the duck bag limit, the daily limit is the same as the duck bag limit, only two of which may be hooded mergansers.

Coot Limits: The daily bag limit is 15 coots.

Lake Champlain Zone, New York: The waterfowl seasons, limits, and shooting hours shall be the same as those selected for the Lake Champlain Zone of Vermont.

Connecticut River Zone, Vermont: The waterfowl seasons, limits, and shooting hours shall be the same as those selected for the Inland Zone of New Hampshire.

Zoning and Split Seasons: Delaware, Florida, Georgia, Maryland, North Carolina, Rhode Island, South Carolina, Virginia, and West Virginia may split their seasons into three segments; Connecticut, Maine, Massachusetts, New Hampshire, New Jersey, New York, Pennsylvania, and Vermont may select hunting seasons by zones and may split their seasons into two segments in each zone.

Canada Geese

Season Lengths, Outside Dates, and Limits: Specific regulations for Canada geese are shown below by State. These seasons also include white-fronted geese. Unless specified otherwise, seasons may be split into two segments. In areas within States where the framework closing date for Atlantic Population (AP) goose seasons overlaps with special late-season frameworks for resident geese, the framework closing date for AP goose seasons is January 14.

Connecticut:

North Atlantic Population (NAP) Zone: Between October 1 and January 31, a 60-day season may be held with a 2-bird daily bag limit.

Atlantic Population (AP) Zone: A 45-day season may be held between the fourth Saturday in October (October 22) and January 31, with a 3-bird daily bag limit.

South Zone: A special season may be held between January 15 and February 15, with a 5-bird daily bag limit.

Resident Population (RP) Zone: An 80-day season may be held between October 1 and February 15, with a 5-bird daily bag limit. The season may be split into 3 segments.

Delaware: A 45-day season may be held between November 15 and January 31, with a 2-bird daily bag limit.

Florida: An 80-day season may be held between November 15 and February 15, with a 5-bird daily bag limit. The season may be split into 3 segments.

Georgia: In specific areas, an 80-day season may be held between November 15 and February 15, with a 5-bird daily bag limit. The season may be split into 3 segments.

Maine: A 60-day season may be held Statewide between October 1 and January 31, with a 2-bird daily bag limit.

Maryland:

RP Zone: An 80-day season may be held between November 15 and March 10, with a 5-bird daily bag limit. The season may be split into 3 segments.

AP Zone: A 45-day season may be held between November 15 and January 31, with a 2-bird daily bag limit.

Massachusetts:

NAP Zone: A 60-day season may be held between October 1 and January 31, with a 2-bird daily bag limit. Additionally, a special season may be held from January 15 to February 15, with a 5-bird daily bag limit.

AP Zone: A 45-day season may be held between October 20 and January 31, with a 3-bird daily bag limit.

New Hampshire:

A 60-day season may be held statewide between October 1 and January 31, with a 2-bird daily bag limit.

New Jersey:

Statewide: A 45-day season may be held between the fourth Saturday in October (October 22) and January 31, with a 3-bird daily bag limit.

Special Late Goose Season Area: A special season may be held in designated areas of North and South New Jersey from January 15 to February 15, with a 5-bird daily bag limit.

New York:

NAP Zone: Between October 1 and January 31, a 60-day season may be held, with a 2-bird daily bag limit in the High Harvest areas; and between October 1 and February 15, a 70-day season may be held, with a 3-bird daily bag limit in the Low Harvest areas.

Special Late Goose Season Area: A special season may be held between January 15 and February 15, with a 5-bird daily bag limit in designated areas of Suffolk County.

AP Zone: A 45-day season may be held between the fourth Saturday in October (October 22), except in the Lake Champlain Area where the opening date is October 20, and January 31, with a 3-bird daily bag limit.

Western Long Island RP Zone: A 107-day season may be held between the Saturday nearest September 24 (September 24) and March 10, with an 8-bird daily bag limit. The season may be split into 3 segments.

Rest of State RP Zone: An 80-day season may be held between the fourth Saturday in October (October 22) and March 10, with a 5-bird daily bag limit. The season may be split into 3 segments.

North Carolina:

SJBP Zone: A 70-day season may be held between October 1 and December 31, with a 5-bird daily bag limit.

RP Zone: An 80-day season may be held between October 1 and March 10, with a 5-bird daily bag limit. The season may be split into 3 segments.

Northeast Hunt Unit: A 7-day season may be held between the Saturday prior to December 25 (December 24) and January 31, with a 1-bird daily bag limit.

Pennsylvania:

SJBP Zone: A 70-day season may be held between the second Saturday in October (October 8) and February 15, with a 3-bird daily bag limit.

RP Zone: An 80-day season may be held between the fourth Saturday in October (October 22) and March 10, with a 5-bird daily bag limit. The season may be split into 3 segments.

AP Zone: A 45-day season may be held between the fourth Saturday in October (October 22) and January 31, with a 3-bird daily bag limit.

Rhode Island: A 60-day season may be held between October 1 and January 31, with a 2-bird daily bag limit. A special late season may be held in designated areas from January 15 to February 15, with a 5-bird daily bag limit.

South Carolina: In designated areas, an 80-day season may be held during November 15 to February 15, with a 5-bird daily bag limit. The season may be split into 3 segments.

Vermont: A 45-day season may be held between October 20 and January 31 with a 3-bird daily bag limit in the Lake Champlain Zone and Interior Zone. A 60-day season may be held in the Connecticut River Zone between October 1 and January 31, with a 2-bird daily bag limit.

Virginia:

SJBP Zone: A 40-day season may be held between November 15 and January

14, with a 3-bird daily bag limit. Additionally, a special late season may be held between January 15 and February 15, with a 5-bird daily bag limit.

AP Zone: A 45-day season may be held between November 15 and January 31, with a 2-bird daily bag limit.

RP Zone: An 80-day season may be held between November 15 and March 10, with a 5-bird daily bag limit. The season may be split into 3 segments.

West Virginia: An 80-day season may be held between October 1 and January 31, with a 5-bird daily bag limit. The season may be split into 2 segments in each zone.

Light Geese

Season Lengths, Outside Dates, and Limits: States may select a 107-day season between October 1 and March 10, with a 25-bird daily bag limit and no possession limit. States may split their seasons into three segments.

Brant

Season Lengths, Outside Dates, and Limits: States may select a 50-day season between the Saturday nearest September 24 (September 24) and January 31, with a 2-bird daily bag limit. States may split their seasons into two segments.

Mississippi Flyway

Ducks, Mergansers, and Coots

Outside Dates: Between the Saturday nearest September 24 (September 24) and the last Sunday in January (January 29).

Hunting Seasons and Duck Limits: The season may not exceed 60 days, with a daily bag limit of 6 ducks, including no more than 4 mallards (no more than 2 of which may be females), 1 mottled duck, 1 black duck, 2 pintails, 3 wood ducks, 1 canvasback, 2 scaup, and 2 redheads.

Merganser Limits: The daily bag limit is 5, only 2 of which may be hooded mergansers. In States that include mergansers in the duck bag limit, the daily limit is the same as the duck bag limit, only 2 of which may be hooded mergansers.

Coot Limits: The daily bag limit is 15 coots.

Zoning and Split Seasons: Alabama, Illinois, Indiana, Iowa, Kentucky, Louisiana, Michigan, Minnesota, Missouri, Ohio, Tennessee, and Wisconsin may select hunting seasons by zones.

In Alabama, Indiana, Iowa, Kentucky, Louisiana, Michigan, Minnesota, Ohio, Tennessee, and Wisconsin, the season may be split into two segments in each zone.

In Arkansas and Mississippi, the season may be split into three segments.

Geese

Split Seasons: Seasons for geese may be split into three segments.

Season Lengths, Outside Dates, and Limits: States may select seasons for light geese not to exceed 107 days, with 20 geese daily between the Saturday nearest September 24 (September 24) and March 10; for white-fronted geese not to exceed 74 days with 2 geese daily or 88 days with 1 goose daily between the Saturday nearest September 24 (September 24) and the Sunday nearest February 15 (February 12); and for brant not to exceed 70 days, with 2 brant daily or 107 days with 1 brant daily between the Saturday nearest September 24 (September 24) and January 31. There is no possession limit for light geese. Specific regulations for Canada geese and exceptions to the above general provisions are shown below by State. Except as noted below, the outside dates for Canada geese are the Saturday nearest September 24 (September 24) and January 31.

Alabama: In the SJBP Goose Zone, the season for Canada geese may not exceed 70 days. Elsewhere, the season for Canada geese may extend for 70 days in the respective duck-hunting zones. The daily bag limit is 2 Canada geese.

Arkansas: In the Northwest Zone, the season for Canada geese may extend for 82 days. In the remainder of the State, the season may not exceed 72 days. The season may extend to February 15. The daily bag limit is 2 Canada geese.

Illinois: The season for Canada geese may extend for 85 days in the North and Central Zones and 66 days in the South Central and South Zones. The daily bag limit is 2 Canada geese.

Indiana: The season for Canada geese may extend for 74 days. The daily bag limit is 2 Canada geese.

Late Canada Goose Season Areas:

(a) A special Canada goose season of up to 15 days may be held during February 1–15 in the Late Canada Goose Season Zone. During this special season the daily bag limit cannot exceed 5 Canada geese.

(b) An experimental special Canada goose season of up to 15 days may be held during February 1–15 in the Experimental Late Canada Goose Zone. During this special season the daily bag limit cannot exceed 5 Canada geese.

Iowa: The season for Canada geese may extend for 107 days. The daily bag limit is 3 Canada geese.

Kentucky:

(a) Western Zone—The season for Canada geese may extend for 70 days (85 days in Fulton County). The season in Fulton County may extend to February 15. The daily bag limit is 2 Canada geese.

(b) Pennyroyal/Coalfield Zone—The season may extend for 70 days. The daily bag limit is 2 Canada geese.

(c) Remainder of the State—The season may extend for 70 days. The daily bag limit is 2 Canada geese.

Louisiana: The season for Canada geese may extend for 44 days. The daily bag limit is 1 Canada goose.

Michigan:

(a) North Zone—The framework opening date for all geese is September 16 and the season for Canada geese may extend for 45 days. The daily bag limit is 2 Canada geese.

(b) Middle Zone—The framework opening date for all geese is September 16 and the season for Canada geese may extend for 45 days. The daily bag limit is 2 Canada geese.

(c) South Zone—The framework opening date for all geese is September 16 and the season for Canada geese may extend for 45 days. The daily bag limit is 2 Canada geese.

(1) Allegan County and Muskegon Wastewater GMU—The framework opening date for all geese is September 16 and the season for Canada geese may extend for 45 days. The daily bag limit is 2 Canada geese.

(2) Saginaw County and Tuscola/Huron GMUs—The framework opening date for all geese is September 16 and the season for Canada geese may extend for 45 days through December 30 and an additional 30 days may be held between December 31 and February 7. The daily bag limit is 2 Canada geese.

(d) Southern Michigan Late Season Canada Goose Zone—A 30-day special Canada goose season may be held between December 31 and February 7. The daily bag limit may not exceed 5 Canada geese.

Minnesota: The season for Canada geese may extend for 85 days. The daily bag limit is 3 Canada geese.

Mississippi: The season for Canada geese may extend for 70 days. The daily bag limit is 3 Canada geese.

Missouri: The season for Canada geese may extend for 85 days. The daily bag limit is 3 Canada geese.

Ohio:

(a) Lake Erie Zone—The season may extend for 74 days. The daily bag limit is 2 Canada geese.

(b) North Zone—The season may extend for 74 days. The daily bag limit is 2 Canada geese.

(c) South Zone—The season may extend for 74 days. The daily bag limit is 2 Canada geese.

Tennessee:

(a) Northwest Zone—The season for Canada geese may not exceed 72 days,

and may extend to February 15. The daily bag limit is 2 Canada geese.

(b) Southwest Zone—The season for Canada geese may extend for 72 days. The daily bag limit is 2 Canada geese.

(c) Kentucky/Barkley Lakes Zone—The season for Canada geese may extend for 72 days. The daily bag limit is 2 Canada geese.

(d) Remainder of the State—The season for Canada geese may extend for 72 days. The daily bag limit is 2 Canada geese.

Wisconsin:

(a) Horicon Zone—The framework opening date for all geese is September 16. The season may not exceed 92 days. All Canada geese harvested must be tagged. The season limit will be 6 Canada geese per permittee.

(b) Exterior Zone—The framework opening date for all geese is September 16. The season may not exceed 85 days. The daily bag limit is 2 Canada geese.

Additional Limits: In addition to the harvest limits stated for the respective zones above, an additional 4,500 Canada geese may be taken in the Horicon Zone under special agricultural permits.

Central Flyway

Ducks, Mergansers, and Coots

Outside Dates: Between the Saturday nearest September 24 (September 24) and the last Sunday in January (January 29).

Hunting Seasons:

(1) High Plains Mallard Management Unit (roughly defined as that portion of the Central Flyway which lies west of the 100th meridian): 97 days. The last 23 days must run consecutively and may start no earlier than the Saturday nearest December 10 (December 10).

(2) Remainder of the Central Flyway: 74 days.

Bag Limits: The daily bag limit is 6 ducks, with species and sex restrictions as follows: 5 mallards (no more than 2 of which may be females), 2 redheads, 2 scaup, 3 wood ducks, 2 pintails, and 1 canvasback. In Texas, the daily bag limit on mottled ducks is 1, except for the first 5 days of the season when it is closed.

Merganser Limits: The daily bag limit is 5 mergansers, only 2 of which may be hooded mergansers. In States that include mergansers in the duck daily bag limit, the daily limit may be the same as the duck bag limit, only two of which may be hooded mergansers.

Coot Limits: The daily bag limit is 15 coots.

Zoning and Split Seasons: Colorado, Kansas (Low Plains portion), Montana, Nebraska (Low Plains portion), New Mexico, Oklahoma (Low Plains portion), South Dakota (Low Plains portion), Texas (Low Plains portion), and Wyoming may select hunting seasons by zones.

In Colorado, Kansas, Montana, Nebraska, New Mexico, North Dakota, Oklahoma, South Dakota, Texas, and Wyoming, the regular season may be split into two segments.

Geese

Split Seasons: Seasons for geese may be split into three segments. Three-way split seasons for Canada geese require Central Flyway Council and U.S. Fish and Wildlife Service approval, and a 3-year evaluation by each participating State.

Outside Dates: For dark geese, seasons may be selected between the outside dates of the Saturday nearest September 24 (September 24) and the Sunday nearest February 15 (February 12). For light geese, outside dates for seasons may be selected between the Saturday nearest September 24 (September 24) and March 10. In the Rainwater Basin Light Goose Area (East and West) of Nebraska, temporal and spatial restrictions that are consistent with the late-winter snow goose hunting strategy cooperatively developed by the Central Flyway Council and the Service are required.

Season Lengths and Limits:

Light Geese: States may select a light goose season not to exceed 107 days. The daily bag limit for light geese is 20 with no possession limit.

Dark Geese: In Kansas, Nebraska, North Dakota, Oklahoma, South Dakota, and the Eastern Goose Zone of Texas, States may select a season for Canada geese (or any other dark goose species except white-fronted geese) not to exceed 107 days with a daily bag limit of 3. Additionally, in the Eastern Goose Zone of Texas, an alternative season of 107 days with a daily bag limit of 1 Canada goose may be selected. For white-fronted geese, these States may select either a season of 74 days with a bag limit of 2 or an 88-day season with a bag limit of 1.

In Colorado, Montana, New Mexico and Wyoming, States may select seasons not to exceed 107 days. The daily bag limit for dark geese is 5 in the aggregate.

In the Western Goose Zone of Texas, the season may not exceed 95 days. The daily bag limit for Canada geese (or any other dark goose species except white-fronted geese) is 5. The daily bag limit for white-fronted geese is 1.

Pacific Flyway

Ducks, Mergansers, Coots, Common Moorhens, and Purple Gallinules

Hunting Seasons and Duck Limits: Concurrent 107 days. The daily bag limit is 7 ducks and mergansers, including no more than 2 female mallards, 2 pintails, 3 scaup, 1 canvasback, and 2 redheads. For scaup, the season length would be 86 days, which may be split according to applicable zones/split duck hunting configurations approved for each State.

The season on coots and common moorhens may be between the outside dates for the season on ducks, but not to exceed 107 days.

Coot, Common Moorhen, and Purple Gallinule Limits: The daily bag and possession limits of coots, common moorhens, and purple gallinules are 25, singly or in the aggregate.

Outside Dates: Between the Saturday nearest September 24 (September 24) and the last Sunday in January (January 29).

Zoning and Split Seasons: Arizona, California, Idaho, Nevada, Oregon, Utah, Washington, and Wyoming may select hunting seasons by zones. Arizona, California, Idaho, Nevada, Oregon, Utah, Washington, and Wyoming may split their seasons into two segments.

Colorado, Montana, and New Mexico may split their seasons into three segments.

Colorado River Zone, California: Seasons and limits shall be the same as seasons and limits selected in the adjacent portion of Arizona (South Zone).

Geese

Season Lengths, Outside Dates, and Limits:

California, Oregon, and Washington:

Dark geese: Except as subsequently noted, 100-day seasons may be selected, with outside dates between the Saturday nearest October 1 (October 1), and the last Sunday in January (January 29). The basic daily bag limit is 4 dark geese, except the dark goose bag limit does not include brant.

Light geese: Except as subsequently noted, 107-day seasons may be selected, with outside dates between the Saturday nearest October 1 (October 1), and March 10. The daily bag limit is 6 light geese.

Arizona, Colorado, Idaho, Montana, Nevada, New Mexico, Utah, and Wyoming:

Dark geese: Except as subsequently noted, 107-day seasons may be selected, with outside dates between the Saturday nearest September 24 (September 24), and the last Sunday in January (January

29). The basic daily bag limit is 4 dark geese.

Light geese: Except as subsequently noted, 107-day seasons may be selected, with outside dates between the Saturday nearest September 24 (September 24), and March 10. The basic daily bag limit is 10 light geese.

Split Seasons: Unless otherwise specified, seasons for geese may be split into up to 3 segments. Three-way split seasons for Canada geese and white-fronted geese require Pacific Flyway Council and U.S. Fish and Wildlife Service approval and a 3-year evaluation by each participating State.

Brant Season

Oregon may select a 16-day season, Washington a 16-day season, and California a 30-day season. Days must be consecutive. Washington and California may select hunting seasons by up to two zones. The daily bag limit is 2 brant and is in addition to dark goose limits. In Oregon and California, the brant season must end no later than December 15.

Arizona: The daily bag limit for dark geese is 3.

California:

Northeastern Zone: The daily bag limit is 6 dark geese.

Balance-of-State Zone: A 107-day season may be selected with outside dates between the Saturday nearest October 1 (October 1) and March 10. Limits may not include more than 6 dark geese per day. In the Sacramento Valley Special Management Area, the season on white-fronted geese must end on or before December 28 and the daily bag limit shall contain no more than 2 white-fronted geese. In the North Coast Special Management Area, a 107-day season may be selected, with outside dates between the Saturday nearest October 1 (October 1) and March 10. Hunting days that occur after the last Sunday in January shall be concurrent with Oregon's South Coast Zone.

Idaho:

Zone 3: Hunting days that occur after the last Sunday in January shall be concurrent with Oregon's Malheur County Zone.

Nevada: The daily bag limit for dark geese is 3.

New Mexico: The daily bag limit for dark geese is 3.

Oregon:

Harney and Lake County Zone: For Lake County only, the daily dark goose bag limit may not include more than 1 white-fronted goose.

Klamath County Zone: A 107-day season may be selected, with outside dates between the Saturday nearest October 1 (October 1), and March 10. A 3-way split season may be selected. For hunting days after the last Sunday in January, the daily bag limit may not include Canada geese.

Malheur County Zone: The daily bag limit of light geese is 10. Hunting days that occur after the last Sunday in January shall be concurrent with Idaho's Zone 2.

Northwest Zone: The daily bag limit may not include more than 3 cackling or Aleutian geese.

Northwest Special Permit Zone: Outside dates are between the Saturday nearest October 1 (October 1) and March 10. The daily bag limit may not include more than 3 cackling or Aleutian geese and daily bag limit of light geese is 4.

South Coast Zone: A 107-day season may be selected, with outside dates between the Saturday nearest October 1 (October 1) and March 10. Hunting days that occur after the last Sunday in January shall be concurrent with California's North Coast Special Management Area. A 3-way split season may be selected.

Utah: The daily bag limit for dark geese is 3.

Washington: The daily bag limit is 4 geese.

Area 1: Outside dates are between the Saturday nearest October 1 (October 1), and the last Sunday in January (January 29).

Areas 2A and 2B (Southwest Quota Zone): Except for designated areas, there will be no open season on Canada geese. See section on quota zones. In this area, the daily bag limit may include 3 cackling geese. In Southwest Quota Zone Area 2B (Pacific County), the daily bag limit may include 1 Aleutian goose.

Areas 4 and 5: A 107-day season may be selected for dark geese.

Wyoming: The daily bag limit for dark geese is 3.

Quota Zones

Seasons on geese must end upon attainment of individual quotas of dusky geese allotted to the designated areas of Oregon (90) and Washington (45). The September Canada goose season, the regular goose season, any special late dark goose season, and any extended falconry season, combined, must not exceed 107 days, and the established quota of dusky geese must not be exceeded. Hunting of geese in those designated areas will be only by hunters possessing a State-issued permit authorizing them to do so. In a Service-approved investigation, the State must obtain quantitative information on hunter compliance of those regulations aimed at reducing the take of dusky geese. If the monitoring program cannot be conducted, for any reason, the season must immediately close. In the designated areas of the Washington Southwest Quota Zone, a special late goose season may be held between the Saturday following the close of the general goose season and March 10. In the Northwest Special Permit Zone of Oregon, the framework closing date is March 10. Regular goose seasons may be split into 3 segments within the Oregon and Washington quota zones.

Swans

In portions of the Pacific Flyway (Montana, Nevada, and Utah), an open season for taking a limited number of swans may be selected. Permits will be issued by the State and will authorize each permittee to take no more than 1 swan per season with each permit. Nevada may issue up to 2 permits per hunter. Montana and Utah may only issue 1 permit per hunter. Each State's season may open no earlier than the Saturday nearest October 1 (October 1). These seasons are also subject to the following conditions:

Montana: No more than 500 permits may be issued. The season must end no later than December 1. The State must implement a harvest-monitoring program to measure the species composition of the swan harvest and should use appropriate measures to maximize hunter compliance in reporting bill measurement and color information.

Utah: No more than 2,000 permits may be issued. During the swan season, no more than 10 trumpeter swans may be taken. The season must end no later than the second Sunday in December (December 11) or upon attainment of 10 trumpeter swans in the harvest, whichever occurs earliest. The Utah season remains subject to the terms of the Memorandum of Agreement entered into with the Service in August 2001, regarding harvest monitoring, season closure procedures, and education requirements to minimize the take of trumpeter swans during the swan season.

Nevada: No more than 650 permits may be issued. During the swan season, no more than 5 trumpeter swans may be taken. The season must end no later than the Sunday following January 1 (January 8) or upon attainment of 5 trumpeter swans in the harvest, whichever occurs earliest.

In addition, the States of Utah and Nevada must implement a harvest-monitoring program to measure the species composition of the swan harvest. The harvest-monitoring program must require that all harvested swans or their species-determinant parts be examined by either State or Federal

biologists for the purpose of species classification. The States should use appropriate measures to maximize hunter compliance in providing bagged swans for examination. Further, the States of Montana, Nevada, and Utah must achieve at least an 80-percent compliance rate, or subsequent permits will be reduced by 10 percent. All three States must provide to the Service by June 30, 2012, a report detailing harvest, hunter participation, reporting compliance, and monitoring of swan populations in the designated hunt areas.

Tundra Swans

In portions of the Atlantic Flyway (North Carolina and Virginia) and the Central Flyway (North Dakota, South Dakota [east of the Missouri River], and that portion of Montana in the Central Flyway), an open season for taking a limited number of tundra swans may be selected. Permits will be issued by the States that authorize the take of no more than 1 tundra swan per permit. A second permit may be issued to hunters from unused permits remaining after the first drawing. The States must obtain harvest and hunter participation data. These seasons are also subject to the following conditions:

In the Atlantic Flyway:

—The season may be 90 days, from October 1 to January 31.
—In North Carolina, no more than 5,000 permits may be issued.
—In Virginia, no more than 600 permits may be issued.

In the Central Flyway:

—The season may be 107 days, from the Saturday nearest October 1 (October 1) to January 31.
—In the Central Flyway portion of Montana, no more than 500 permits may be issued.
—In North Dakota, no more than 2,200 permits may be issued.
—In South Dakota, no more than 1,300 permits may be issued.

Area, Unit, and Zone Descriptions

Ducks (Including Mergansers) and Coots

Atlantic Flyway

Connecticut:

North Zone: That portion of the State north of I–95.

South Zone: Remainder of the State.

Maine:

North Zone: That portion north of the line extending from the Maine-New Brunswick border in Baileyville, Maine west along Stony Brook to Route 9 in Baileyville; west along Route 9 to Route 15 in Bangor; west along Route 15 to I–95 in Bangor; southwest along I–95 to the bridge across the Kennebec River in Fairfield; north/northwest along the western shore of the Kennebec River to the bridge across the Kennebec River in Anson; southwest along Route 148 in Anson to Route 43 in Industry; southwest along Route 43 to Route 4 in Farmington; southwest along Route 4 to Route 140 in Jay; southwest along Route 140 to Route 108 in Canton; southeast along Route 108 to Route 4 in Livermore; south along Route 4 to Route 11 in Auburn; southwest along Route 11 to Route 110 in Newfield; and west along Route 110 to Maine-New Hampshire border.

South Zone: Remainder of the State.

Massachusetts:

Western Zone: That portion of the State west of a line extending south from the Vermont State line on I–91 to MA 9, west on MA 9 to MA 10, south on MA 10 to U.S. 202, south on U.S. 202 to the Connecticut State line.

Central Zone: That portion of the State east of the Berkshire Zone and west of a line extending south from the New Hampshire State line on I–95 to U.S. 1, south on U.S. 1 to I–93, south on I–93 to MA 3, south on MA 3 to U.S. 6, west on U.S. 6 to MA 28, west on MA 28 to I–195, west to the Rhode Island State line; except the waters, and the lands 150 yards inland from the high-water mark, of the Assonet River upstream to the MA 24 bridge, and the Taunton River upstream to the Center St.– Elm St. bridge shall be in the Coastal Zone.

Coastal Zone: That portion of Massachusetts east and south of the Central Zone.

New Hampshire:

Coastal Zone: That portion of the State east of a line extending west from the Maine State line in Rollinsford on NH 4 to the city of Dover, south to NH 108, south along NH 108 through Madbury, Durham, and Newmarket to NH 85 in Newfields, south to NH 101 in Exeter, east to NH 51 (Exeter-Hampton Expressway), east to I–95 (New Hampshire Turnpike) in Hampton, and south along I–95 to the Massachusetts State line.

Inland Zone: That portion of the State north and west of the above boundary and along the Massachusetts State line crossing the Connecticut River to Interstate 91 and northward in Vermont to Route 2, east to 102, northward to the Canadian border.

New Jersey:

Coastal Zone: That portion of the State seaward of a line beginning at the New York State line in Raritan Bay and extending west along the New York State line to NJ 440 at Perth Amboy; west on NJ 440 to the Garden State Parkway; south on the Garden State Parkway to the shoreline at Cape May and continuing to the Delaware State line in Delaware Bay.

North Zone: That portion of the State west of the Coastal Zone and north of a line extending west from the Garden State Parkway on NJ 70 to the New Jersey Turnpike, north on the turnpike to U.S. 206, north on U.S. 206 to U.S. 1 at Trenton, west on U.S. 1 to the Pennsylvania State line in the Delaware River.

South Zone: That portion of the State not within the North Zone or the Coastal Zone.

New York:

Lake Champlain Zone: That area east and north of a continuous line extending along U.S. 11 from the New York-Canada International boundary south to NY 9B, south along NY 9B to U.S. 9, south along U.S. 9 to NY 22 south of Keesville; south along NY 22 to the west shore of South Bay, along and around the shoreline of South Bay to NY 22 on the east shore of South Bay; southeast along NY 22 to U.S. 4, northeast along U.S. 4 to the Vermont State line.

Long Island Zone: That area consisting of Nassau County, Suffolk County, that area of Westchester County southeast of I–95, and their tidal waters.

Western Zone: That area west of a line extending from Lake Ontario east along the north shore of the Salmon River to I–81, and south along I–81 to the Pennsylvania State line.

Northeastern Zone: That area north of a continuous line extending from Lake Ontario east along the north shore of the Salmon River to I–81, south along I–81 to NY 31, east along NY 31 to NY 13, north along NY 13 to NY 49, east along NY 49 to NY 365, east along NY 365 to NY 28, east along NY 28 to NY 29, east along NY 29 to NY 22, north along NY 22 to Washington County Route 153, east along CR 153 to the New York-Vermont boundary, exclusive of the Lake Champlain Zone.

Southeastern Zone: The remaining portion of New York.

Pennsylvania:

Lake Erie Zone: The Lake Erie waters of Pennsylvania and a shoreline margin along Lake Erie from New York on the east to Ohio on the west extending 150 yards inland, but including all of Presque Isle Peninsula.

Northwest Zone: The area bounded on the north by the Lake Erie Zone and including all of Erie and Crawford Counties and those portions of Mercer and Venango Counties north of I–80.

North Zone: That portion of the State east of the Northwest Zone and north of a line extending east on I–80 to U.S.

220, Route 220 to I–180, I–180 to I–80, and I–80 to the Delaware River.

South Zone: The remaining portion of Pennsylvania.

Vermont:

Lake Champlain Zone: The U.S. portion of Lake Champlain and that area north and west of the line extending from the New York border along U.S. 4 to VT 22A at Fair Haven; VT 22A to U.S. 7 at Vergennes; U.S. 7 to VT 78 at Swanton; VT 78 to VT 36; VT 36 to Maquam Bay on Lake Champlain; along and around the shoreline of Maquam Bay and Hog Island to VT 78 at the West Swanton Bridge; VT 78 to VT 2 in Alburg; VT 2 to the Richelieu River in Alburg; along the east shore of the Richelieu River to the Canadian border.

Interior Zone: That portion of Vermont east of the Lake Champlain Zone and west of a line extending from the Massachusetts border at Interstate 91; north along Interstate 91 to U.S. 2; east along U.S. 2 to VT 102; north along VT 102 to VT 253; north along VT 253 to the Canadian border.

Connecticut River Zone: The remaining portion of Vermont east of the Interior Zone.

Mississippi Flyway

Alabama:

South Zone: Mobile and Baldwin Counties.

North Zone: The remainder of Alabama.

Illinois:

North Zone: That portion of the State north of a line extending west from the Indiana border along Peotone-Beecher Road to Illinois Route 50, south along Illinois Route 50 to Wilmington-Peotone Road, west along Wilmington-Peotone Road to Illinois Route 53, north along Illinois Route 53 to New River Road, northwest along New River Road to Interstate Highway 55, south along I–55 to Pine Bluff-Lorenzo Road, west along Pine Bluff-Lorenzo Road to Illinois Route 47, north along Illinois Route 47 to I–80, west along I–80 to I–39, south along I–39 to Illinois Route 18, west along Illinois Route 18 to Illinois Route 29, south along Illinois Route 29 to Illinois Route 17, west along Illinois Route 17 to the Mississippi River, and due south across the Mississippi River to the Iowa border.

Central Zone: That portion of the State south of the North Duck Zone line to a line extending west from the Indiana border along I–70 to Illinois Route 4, south along Illinois Route 4 to Illinois Route 161, west along Illinois Route 161 to Illinois Route 158, south and west along Illinois Route 158 to Illinois Route 159, south along Illinois Route 159 to Illinois Route 3, south along Illinois Route 3 to St. Leo's Road, south along St. Leo's road to Modoc Road, west along Modoc Road to Modoc Ferry Road, southwest along Modoc Ferry Road to Levee Road, southeast along Levee Road to County Route 12 (Modoc Ferry entrance Road), south along County Route 12 to the Modoc Ferry route and southwest on the Modoc Ferry route across the Mississippi River to the Missouri border.

South Zone: That portion of the State south and east of a line extending west from the Indiana border along Interstate 70, south along U.S. Highway 45, to Illinois Route 13, west along Illinois Route 13 to Greenbriar Road, north on Greenbriar Road to Sycamore Road, west on Sycamore Road to N. Reed Station Road, south on N. Reed Station Road to Illinois Route 13, west along Illinois Route 13 to Illinois Route 127, south along Illinois Route 127 to State Forest Road (1025 N), west along State Forest Road to Illinois Route 3, north along Illinois Route 3 to the south bank of the Big Muddy River, west along the south bank of the Big Muddy River to the Mississippi River, west across the Mississippi River to the Missouri border.

South Central Zone: The remainder of the State between the south border of the Central Zone and the North border of the South Zone.

Indiana:

North Zone: That portion of the State north of a line extending east from the Illinois State line along State Road 18 to U.S. Highway 31, north along U.S. 31 to U.S. 24, east along U.S. 24 to Huntington, then southeast along U.S. 224 to the Ohio State line.

Ohio River Zone: That portion of the State south of a line extending east from the Illinois State line along Interstate Highway 64 to New Albany, east along State Road 62 to State Road 56, east along State Road 56 to Vevay, east and north on State 156 along the Ohio River to North Landing, north along State 56 to U.S. Highway 50, then northeast along U.S. 50 to the Ohio State line.

South Zone: That portion of the State between the North and Ohio River Zone boundaries.

Iowa:

North Zone: That portion of the State north of a line extending east from the South Dakota-Iowa border along Interstate 29 southeast to Woodbury County Road D38, east along Woodbury County Road D38 to Woodbury County Road K45, southeast along Woodbury County Road K45 to State Highway 175, east along State Highway 175 to State Highway 37, southeast along State Highway 37 to State Highway 183, northeast along State Highway 183 to State Highway 141, east along State Highway 141 to U.S. Highway 30, and along U.S. Highway 30 to the Illinois border.

South Zone: The remainder of Iowa.

Kentucky:

West Zone: All counties west of and including Butler, Daviess, Ohio, Simpson, and Warren Counties.

East Zone: The remainder of Kentucky.

Louisiana:

West Zone: That portion of the State west and south of a line extending south from the Arkansas State line along Louisiana Highway 3 to Bossier City, east along Interstate Highway 20 to Minden, south along Louisiana 7 to Ringgold, east along Louisiana 4 to Jonesboro, south along U.S. Highway 167 to Lafayette, southeast along U.S. 90 to the Mississippi State line.

East Zone: The remainder of Louisiana.

Michigan:

North Zone: The Upper Peninsula.

Middle Zone: That portion of the Lower Peninsula north of a line beginning at the Wisconsin State line in Lake Michigan due west of the mouth of Stony Creek in Oceana County; then due east to, and easterly and southerly along the south shore of Stony Creek to Scenic Drive, easterly and southerly along Scenic Drive to Stony Lake Road, easterly along Stony Lake and Garfield Roads to Michigan Highway 20, east along Michigan 20 to U.S. Highway 10 Business Route (BR) in the city of Midland, easterly along U.S. 10 BR to U.S. 10, easterly along U.S. 10 to Interstate Highway 75/U.S. Highway 23, northerly along I–75/U.S. 23 to the U.S. 23 exit at Standish, easterly along U.S. 23 to the centerline of the Au Gres River, then southerly along the centerline of the Au Gres River to Saginaw Bay, then on a line directly east 10 miles into Saginaw Bay, and from that point on a line directly northeast to the Canadian border.

South Zone: The remainder of Michigan.

Minnesota:

North Duck Zone: That portion of the State north of a line extending east from the North Dakota State line along State Highway 210 to State Highway 23, east along State Highway 23 to State Highway 39, then east along State Highway 39 to the Wisconsin State line at the Oliver Bridge.

South Duck Zone: The remainder of Minnesota.

Missouri:

North Zone: That portion of Missouri north of a line running west from the Illinois border at Lock and Dam 25; west on Lincoln County Hwy. N to Mo. Hwy.

79; south on Mo. Hwy. 79 to Mo. Hwy. 47; west on Mo. Hwy. 47 to I–70; west on I–70 to the Kansas border.

Middle Zone: The remainder of Missouri not included in other zones.

South Zone: That portion of Missouri south of a line running west from the Illinois border on Mo. Hwy. 74 to Mo. Hwy. 25; south on Mo. Hwy 25. to U.S. Hwy. 62; west on U.S. Hwy. 62 to Mo. Hwy. 53; north on Mo. Hwy. 53 to Mo. Hwy. 51; north on Mo. Hwy. 51 to U.S. Hwy. 60; west on U.S. Hwy. 60 to Mo. Hwy. 21; north on Mo. Hwy. 21 to Mo. Hwy. 72; west on Mo. Hwy. 72 to Mo. Hwy. 32; west on Mo. Hwy. 32 to U.S. Hwy. 65; north on U.S. Hwy. 65 to U.S. Hwy. 54; west on U.S. Hwy. 54 to U.S. Hwy. 71; south on U.S. Hwy. 71 to Jasper County Hwy. M; west on Jasper County Hwy. M to the Kansas border.

Ohio:

Lake Erie Marsh Zone: Includes all land and water within the boundaries of the area bordered by Interstate 75 from the Ohio-Michigan line to Interstate 280 to Interstate 80 to the Erie-Lorain County line extending to a line measuring two hundred (200) yards from the shoreline into the waters of Lake Erie and including the waters of Sandusky Bay and Maumee Bay.

North Zone: That portion of the State north of a line beginning at the Ohio-Indiana border and extending east along Interstate 70 to the Ohio-West Virginia border.

South Zone: The remainder of Ohio.

Tennessee:

Reelfoot Zone: All or portions of Lake and Obion Counties.

State Zone: The remainder of Tennessee.

Wisconsin:

North Zone: That portion of the State north of a line extending east from the Minnesota State line along U.S. Highway 10 into Portage County to County Highway HH, east on County Highway HH to State Highway 66 and then east on State Highway 66 to U.S. Highway 10, continuing east on U.S. Highway 10 to U.S. Highway 41, then north on U.S. Highway 41 to the Michigan State line.

One or both of the following two zones:

Mississippi River Zone: That area encompassed by a line beginning at the intersection of the Burlington Northern & Santa Fe Railway and the Illinois State line in Grant County and extending northerly along the Burlington Northern & Santa Fe Railway to the city limit of Prescott in Pierce County, then west along the Prescott city limit to the Minnesota State line.

South Zone: The remainder of Wisconsin.

Central Flyway

Colorado (Central Flyway Portion):

Northeast Zone: All areas east of Interstate 25 and north of Interstate 70.

Southeast Zone: All areas east of Interstate 25 and south of Interstate 70, and all of El Paso, Pueblo, Huerfano, and Las Animas counties.

Mountain/Foothills Zone: All areas west of Interstate 25 and east of the Continental Divide, except El Paso, Pueblo, Huerfano, and Las Animas counties.

Kansas:

High Plains Zone: That portion of the State west of U.S. 283.

Early Zone: That part of Kansas bounded by a line from the Nebraska-Kansas State line south on K–128 to its junction with US–36, then east on US–36 to its junction with K–199, then south on K–199 to its junction with Republic County 30 Rd, then south on Republic County 30 Rd to its junction with K–148, then east on K–148 to its junction with Republic County 50 Rd, then south on Republic County 50 Rd to its junction with Cloud County 40th Rd, then south on Cloud County 40th Rd to its junction with K–9, then west on K–9 to its junction with US–24, then west on US–24 to its junction with US–281, then north on US–281 to its junction with US–36, then west on US–36 to its junction with US–183, then south on US–183 to its junction with US–24, then west on US–24 to its junction with K–18, then southeast on K–18 to its junction with US–183, then south on US–183 to its junction with K–4, then east on K–4 to its junction with I–135, then south on I–135 to its junction with K–61, then southwest on K–61 to McPherson County 14th Avenue, then south on McPherson County 14th Avenue to its junction with Arapaho Rd, then west on Arapaho Rd to its junction with K–61, then southwest on K–61 to its junction with K–96, then northwest on K–96 to its junction with US–56, then southwest on US–56 to its junction with K–19, then east on K–19 to its junction with US–281, then south on US–281 to its junction with US–54, then west on US–54 to its junction with US–183, then north on US–183 to its junction with US–56, then southwest on US–56 to its junction with Ford County Rd 126, then south on Ford County Rd 126 to its junction with US–400, then northwest on US–400 to its junction with US–283, then north on US–283 to its junction with the Nebraska-Kansas State line, then east along the Nebraska-Kansas State line to its junction with K–128.

Late Zone: That part of Kansas bounded by a line from the Nebraska-Kansas State line south on K–128 to its junction with US–36, then east on US–36 to its junction with K–199, then south on K–199 to its junction with Republic County 30 Rd, then south on Republic County 30 Rd to its junction with K–148, then east on K–148 to its junction with Republic County 50 Rd, then south on Republic County 50 Rd to its junction with Cloud County 40th Rd, then south on Cloud County 40th Rd to its junction with K–9, then west on K–9 to its junction with US–24, then west on US–24 to its junction with US–281, then north on US–281 to its junction with US–36, then west on US–36 to its junction with US–183, then south on US–183 to its junction with US–24, then west on US–24 to its junction with K–18, then southeast on K–18 to its junction with US–183, then south on US–183 to its junction with K–4, then east on K–4 to its junction with I–135, then south on I–135 to its junction with K–61, then southwest on K–61 to 14th Avenue, then south on 14th Avenue to its junction with Arapaho Rd, then west on Arapaho Rd to its junction with K–61, then southwest on K–61 to its junction with K–96, then northwest on K–96 to its junction with US–56, then southwest on US–56 to its junction with K–19, then east on K–19 to its junction with US–281, then south on US–281 to its junction with US–54, then west on US–54 to its junction with US–183, then north on US–183 to its junction with US–56, then southwest on US–56 to its junction with Ford County Rd 126, then south on Ford County Rd 126 to its junction with US–400, then northwest on US–400 to its junction with US–283, then south on US–283 to its junction with the Oklahoma-Kansas State line, then east along the Oklahoma-Kansas State line to its junction with US–77, then north on US–77 to its junction with Butler County, NE 150th Street, then east on Butler County, NE 150th Street to its junction with US–35, then northeast on US–35 to its junction with K–68, then east on K–68 to the Kansas-Missouri State line, then north along the Kansas-Missouri State line to its junction with the Nebraska State line, then west along the Kansas-Nebraska State line to its junction with K–128.

Southeast Zone: That part of Kansas bounded by a line from the Missouri-Kansas State line west on K–68 to its junction with US–35, then southwest on US–35 to its junction with Butler County, NE 150th Street, then west on NE 150th Street until its junction with K–77, then south on K–77 to the Oklahoma-Kansas State line, then east along the Kansas-Oklahoma State line to its junction with the Missouri State line,

then north along the Kansas-Missouri State line to its junction with K–68.

Montana (Central Flyway Portion):

Zone 1: The Counties of Blaine, Carbon, Carter, Daniels, Dawson, Fallon, Fergus, Garfield, Golden Valley, Judith Basin, McCone, Musselshell, Petroleum, Phillips, Powder River, Richland, Roosevelt, Sheridan, Stillwater, Sweet Grass, Valley, Wheatland, Wibaux, and Yellowstone.

Zone 2: The remainder of Montana.

Nebraska:

High Plains: That portion of Nebraska lying west of a line beginning at the South Dakota-Nebraska border on U.S. Hwy. 183; south on U.S. Hwy. 183 to U.S. Hwy. 20; west on U.S. Hwy. 20 to NE Hwy. 7; south on NE Hwy. 7 to NE Hwy. 91; southwest on NE Hwy. 91 to NE Hwy. 2; southeast on NE Hwy. 2 to NE Hwy. 92; west on NE Hwy. 92 to NE Hwy. 40; south on NE Hwy. 40 to NE Hwy. 47; south on NE Hwy. 47 to NE Hwy. 23; east on NE Hwy. 23 to U.S. Hwy. 283; and south on U.S. Hwy. 283 to the Kansas-Nebraska border.

Low Plains Zone 1: That portion of Dixon County west of NE Hwy. 26E Spur and north of NE Hwy. 12; those portions of Cedar and Knox Counties north of NE Hwy. 12; that portion of Keya Paha County east of U.S. Hwy. 183; and all of Boyd County. Both banks of the Niobrara River in Keya Paha and Boyd counties east of U.S. Hwy. 183 shall be included in Zone 1.

Low Plains Zone 2: Area bounded by designated Federal and State highways and political boundaries beginning at the Kansas-Nebraska border on U.S. Hwy. 75 to U.S. Hwy. 136; east to the intersection of U.S. Hwy. 136 and the Steamboat Trace (Trace); north along the Trace to the intersection with Federal Levee R–562; north along Federal Levee R–562 to the intersection with the Trace; north along the Trace/Burlington Northern Railroad right-of-way to NE Hwy. 2; west to U.S. Hwy. 75; north to NE Hwy. 2; west to NE Hwy. 43; north to U.S. Hwy. 34; east to NE Hwy. 63; north and west to U.S. Hwy. 77; north to NE Hwy. 92; west to County Rd X; south to County Rd 21 (Seward County Line); west to NE Hwy. 15; north to County Rd 34; west to County Rd J; south to NE Hwy. 92; west to U.S. 81; south to NE 66; west to County Rd C; north to NE Hwy. 92; west to U.S. Hwy. 30; west to NE Hwy. 14; south to County Rd 22 (Hamilton County); west to County Rd M; south to County Rd 21; west to County Rd K; south to U.S. Hwy. 34; west to NE Hwy. 2; south to U.S. Hwy. I–80; west to Gunbarrel Rd (Hall/Hamilton county line); south to Giltner Rd; west to U.S. Hwy. 281; south to U.S. Hwy. 34; west to NE Hwy. 10; north to County Rd ''R'' (Kearney County) and County Rd #742 (Phelps County); west to County Rd #438 (Gosper County line); south along County Rd #438 (Gosper County line) to County Rd #726 (Furnas County line); east to County Rd #438 (Harlan County line); south to U.S. Hwy. 34; south and west to U.S. Hwy. 136; east to U.S. Hwy. 183; north to NE Hwy. 4; east to NE Hwy. 10; south to U.S. Hwy 136; east to NE Hwy. 14; south to the Kansas-Nebraska border; west to U.S. Hwy. 283; north to NE Hwy. 23; west to NE Hwy. 47; north to U.S. Hwy. 30; east to County Rd 13; north to County Rd O; east to NE Hwy. 14; north to NE Hwy. 52; west and north to NE Hwy. 91; west to U.S. Hwy. 281; south to NE Hwy. 22; west to NE Hwy. 11; northwest to NE Hwy. 91; west to U.S. Hwy. 183; south to Round Valley Rd; west to Sargent River Rd; west to Sargent Rd; west to Milburn Rd; north to Blaine County Line; east to Loup County Line; north to NE Hwy. 91; west to North Loup Spur Rd; north to North Loup Rd; east to Pleasant Valley/Worth Rd; east to Loup County Line; north to Loup-Brown county line; east along northern boundaries of Loup, Garfield and Wheeler counties; south on the Wheeler-Antelope county line to NE Hwy. 70; east to NE Hwy. 14; south to NE Hwy. 39; southeast to NE Hwy. 22; east to U.S. Hwy. 81; southeast to U.S. Hwy. 30; east to U.S. Hwy. 75; north to the Washington County line; east to the Iowa–Nebraska border; south along the Iowa-Nebraska border; to the beginning at U.S. Hwy. 75 and the Kansas-Nebraska border.

Low Plains Zone 3: The area east of the High Plains Zone, excluding Low Plains Zone 1, north of Low Plains Zone 2.

Low Plains Zone 4: The area east of the High Plains Zone and south of Zone 2.

New Mexico (Central Flyway Portion):

North Zone: That portion of the State north of I–40 and U.S. 54.

South Zone: The remainder of New Mexico.

North Dakota:

High Plains Unit: That portion of the State south and west of a line from the South Dakota State line along U.S. 83 and I–94 to ND 41, north to U.S. 2, west to the Williams/Divide County line, then north along the County line to the Canadian border.

Low Plains Unit: The remainder of North Dakota.

Oklahoma:

High Plains Zone: The Counties of Beaver, Cimarron, and Texas.

Low Plains Zone 1: That portion of the State east of the High Plains Zone and north of a line extending east from the Texas State line along OK 33 to OK 47, east along OK 47 to U.S. 183, south along U.S. 183 to I–40, east along I–40 to U.S. 177, north along U.S. 177 to OK 33, east along OK 33 to OK 18, north along OK 18 to OK 51, west along OK 51 to I–35, north along I–35 to U.S. 412, west along U.S. 412 to OK 132, then north along OK 132 to the Kansas State line.

Low Plains Zone 2: The remainder of Oklahoma.

South Dakota:

High Plains Zone: That portion of the State west of a line beginning at the North Dakota State line and extending south along U.S. 83 to U.S. 14, east on U.S. 14 to Blunt, south on the Blunt-Canning Rd to SD 34, east and south on SD 34 to SD 50 at Lee's Corner, south on SD 50 to I–90, east on I–90 to SD 50, south on SD 50 to SD 44, west on SD 44 across the Platte-Winner bridge to SD 47, south on SD 47 to U.S. 18, east on U.S. 18 to SD 47, south on SD 47 to the Nebraska State line.

North Zone: That portion of northeastern South Dakota east of the High Plains Unit and north of a line extending east along U.S. 212 to the Minnesota State line.

South Zone: That portion of Gregory County east of SD 47 and south of SD 44; Charles Mix County south of SD 44 to the Douglas County line; south on SD 50 to Geddes; east on the Geddes Highway to U.S. 281; south on U.S. 281 and U.S. 18 to SD 50; south and east on SD 50 to the Bon Homme County line; the Counties of Bon Homme, Yankton, and Clay south of SD 50; and Union County south and west of SD 50 and I–29.

Middle Zone: The remainder of South Dakota.

Texas:

High Plains Zone: That portion of the State west of a line extending south from the Oklahoma State line along U.S. 183 to Vernon, south along U.S. 283 to Albany, south along TX 6 to TX 351 to Abilene, south along U.S. 277 to Del Rio, then south along the Del Rio International Toll Bridge access road to the Mexico border.

Low Plains North Zone: That portion of northeastern Texas east of the High Plains Zone and north of a line beginning at the International Toll Bridge south of Del Rio, then extending east on U.S. 90 to San Antonio, then continuing east on I–10 to the Louisiana State line at Orange, Texas.

Low Plains South Zone: The remainder of Texas.

Wyoming (Central Flyway portion):

Zone C1: The Counties of Converse, Goshen, Hot Springs, Natrona, Platte, and Washakie; and the portion of Park

County east of the Shoshone National Forest boundary and south of a line beginning where the Shoshone National Forest boundary meets Park County Road 8VC, east along Park County Road 8VC to Park County Road 1AB, continuing east along Park County Road 1AB to Wyoming Highway 120, north along WY Highway 120 to WY Highway 294, south along WY Highway 294 to Lane 9, east along Lane 9 to Powel and WY Highway 14A, and finally east along WY Highway 14A to the Park County and Big Horn County line.

Zone C2: The remainder of Wyoming.

Pacific Flyway

Arizona:

Game Management Units (GMU) as follows:

South Zone: Those portions of GMUs 6 and 8 in Yavapai County, and GMUs 10 and 12B–45.

North Zone: GMUs 1–5, those portions of GMUs 6 and 8 within Coconino County, and GMUs 7, 9, 12A.

California:

Northeastern Zone: In that portion of California lying east and north of a line beginning at the intersection of Interstate 5 with the California-Oregon line; south along Interstate 5 to its junction with Walters Lane south of the town of Yreka; west along Walters Lane to its junction with Easy Street; south along Easy Street to the junction with Old Highway 99; south along Old Highway 99 to the point of intersection with Interstate 5 north of the town of Weed; south along Interstate 5 to its junction with Highway 89; east and south along Highway 89 to Main Street Greenville; north and east to its junction with North Valley Road; south to its junction of Diamond Mountain Road; north and east to its junction with North Arm Road; south and west to the junction of North Valley Road; south to the junction with Arlington Road (A22); west to the junction of Highway 89; south and west to the junction of Highway 70; east on Highway 70 to Highway 395; south and east on Highway 395 to the point of intersection with the California-Nevada State line; north along the California-Nevada State line to the junction of the California-Nevada-Oregon State lines; west along the California-Oregon State line to the point of origin.

Colorado River Zone: Those portions of San Bernardino, Riverside, and Imperial Counties east of a line extending from the Nevada State line south along U.S. 95 to Vidal Junction; south on a road known as ''Aqueduct Road'' in San Bernardino County through the town of Rice to the San Bernardino-Riverside County line; south on a road known in Riverside County as the ''Desert Center to Rice Road'' to the town of Desert Center; east 31 miles on I–10 to the Wiley Well Road; south on this road to Wiley Well; southeast along the Army-Milpitas Road to the Blythe, Brawley, Davis Lake intersections; south on the Blythe-Brawley paved road to the Ogilby and Tumco Mine Road; south on this road to U.S. 80; east 7 miles on U.S. 80 to the Andrade-Algodones Road; south on this paved road to the Mexican border at Algodones, Mexico.

Southern Zone: That portion of southern California (but excluding the Colorado River Zone) south and east of a line extending from the Pacific Ocean east along the Santa Maria River to CA 166 near the City of Santa Maria; east on CA 166 to CA 99; south on CA 99 to the crest of the Tehachapi Mountains at Tejon Pass; east and north along the crest of the Tehachapi Mountains to CA 178 at Walker Pass; east on CA 178 to U.S. 395 at the town of Inyokern; south on U.S. 395 to CA 58; east on CA 58 to I–15; east on I–15 to CA 127; north on CA 127 to the Nevada State line.

Southern San Joaquin Valley Temporary Zone: All of Kings and Tulare Counties and that portion of Kern County north of the Southern Zone.

Balance-of-State Zone: The remainder of California not included in the Northeastern, Southern, and Colorado River Zones, and the Southern San Joaquin Valley Temporary Zone.

Idaho:

Zone 1: All lands and waters within the Fort Hall Indian Reservation, including private inholdings; Bannock County; Bingham County, except that portion within the Blackfoot Reservoir drainage; and Power County east of State Highway 37 and State Highway 39.

Zone 2: Adams, Bear Lake, Benewah, Bingham within the Blackfoot Reservoir drainage, Blaine, Bonner, Bonneville, Boundary, Butte, Camas, Caribou except the Fort Hall Indian Reservation, Clark, Clearwater, Custer, Franklin, Fremont, Idaho, Jefferson, Kootenai, Latah, Lemhi, Lewis, Madison, Nez Perce, Oneida, Power County west of State Highway 37 and State Highway 39, Shoshone, Teton, and Valley Counties.

Zone 3: Ada, Boise, Canyon, Cassia, Elmore, Gem, Gooding, Jerome, Lincoln, Minidoka, Owyhee, Payette, Twin Falls, and Washington Counties.

Nevada:

Northeast Zone: All of Elko and White Pine Counties.

Northwest Zone: All of Carson City, Churchill, Douglas, Esmeralda, Eureka, Humboldt, Lander, Lyon, Mineral, Nye, Pershing, Storey, and Washoe Counties.

South Zone: All of Clark and Lincoln County.

Oregon:

Zone 1: Clatsop, Tillamook, Lincoln, Lane, Douglas, Coos, Curry, Josephine, Jackson, Linn, Benton, Polk, Marion, Yamhill, Washington, Columbia, Multnomah, Clackamas, Hood River, Wasco, Sherman, Gilliam, Morrow and Umatilla Counties.

Columbia Basin Mallard Management Unit: Gilliam, Morrow, and Umatilla Counties.

Zone 2: The remainder of the State.

Utah:

Zone 1: All of Box Elder, Cache, Daggett, Davis, Duchesne, Morgan, Rich, Salt Lake, Summit, Unitah, Utah, Wasatch, and Weber Counties, and that part of Toole County north of I–80.

Zone 2: The remainder of Utah.

Washington:

East Zone: All areas east of the Pacific Crest Trail and east of the Big White Salmon River in Klickitat County.

Columbia Basin Mallard Management Unit: Same as East Zone.

West Zone: All areas to the west of the East Zone.

Wyoming:

Snake River Zone: Beginning at the south boundary of Yellowstone National Park and the Continental Divide; south along the Continental Divide to Union Pass and the Union Pass Road (U.S.F.S. Road 600); west and south along the Union Pass Road to U.S.F.S. Road 605; south along U.S.F.S. Road 605 to the Bridger-Teton National Forest boundary; along the national forest boundary to the Idaho State line; north along the Idaho State line to the south boundary of Yellowstone National Park; east along the Yellowstone National Park boundary to the Continental Divide.

Balance of State Zone: Balance of the Pacific Flyway in Wyoming outside the Snake River Zone.

Geese

Atlantic Flyway

Connecticut:

AP Unit: Litchfield County and the portion of Hartford County west of a line beginning at the Massachusetts border in Suffield and extending south along Route 159 to its intersection with Route 91 in Hartford, and then extending south along Route 91 to its intersection with the Hartford/Middlesex County line.

AFRP Unit: Starting at the intersection of I–95 and the Quinnipiac River, north on the Quinnipiac River to its intersection with I–91, north on I–91 to I–691, west on I–691 to the Hartford County line, and encompassing the rest of New Haven County and Fairfield County in its entirety.

NAP H-Unit: All of the rest of the State not included in the AP or AFRP descriptions above.

South Zone: Same as for ducks.

North Zone: Same as for ducks.

Maryland:

Resident Population (RP) Zone: Garrett, Allegany, Washington, Frederick, and Montgomery Counties; that portion of Prince George's County west of Route 3 and Route 301; that portion of Charles County west of Route 301 to the Virginia State line; and that portion of Carroll County west of Route 31 to the intersection of Route 97, and west of Route 97 to the Pennsylvania line.

AP Zone: Remainder of the State.

Massachusetts:

NAP Zone: Central and Coastal Zones (see duck zones).

AP Zone: The Western Zone (see duck zones).

Special Late Season Area: The Central Zone and that portion of the Coastal Zone (see duck zones) that lies north of the Cape Cod Canal, north to the New Hampshire line.

New Hampshire:

Same zones as for ducks.

New Jersey:

North: That portion of the State within a continuous line that runs east along the New York State boundary line to the Hudson River; then south along the New York State boundary to its intersection with Route 440 at Perth Amboy; then west on Route 440 to its intersection with Route 287; then west along Route 287 to its intersection with Route 206 in Bedminster (Exit 18); then north along Route 206 to its intersection with Route 94: then west along Route 94 to the tollbridge in Columbia; then north along the Pennsylvania State boundary in the Delaware River to the beginning point.

South: That portion of the State within a continuous line that runs west from the Atlantic Ocean at Ship Bottom along Route 72 to Route 70; then west along Route 70 to Route 206; then south along Route 206 to Route 536; then west along Route 536 to Route 322; then west along Route 322 to Route 55; then south along Route 55 to Route 553 (Buck Road); then south along Route 553 to Route 40; then east along Route 40 to route 55; then south along Route 55 to Route 552 (Sherman Avenue); then west along Route 552 to Carmel Road; then south along Carmel Road to Route 49; then east along Route 49 to Route 555; then south along Route 555 to Route 553; then east along Route 553 to Route 649; then north along Route 649 to Route 670; then east along Route 670 to Route 47; then north along Route 47 to Route 548; then east along Route 548 to Route 49; then east along Route 49 to Route 50; then south along Route 50 to Route 9; then south along Route 9 to Route 625 (Sea Isle City Boulevard); then east along Route 625 to the Atlantic Ocean; then north to the beginning point.

New York:

Lake Champlain Goose Area: The same as the Lake Champlain Waterfowl Hunting Zone, which is that area of New York State lying east and north of a continuous line extending along Route 11 from the New York-Canada International boundary south to Route 9B, south along Route 9B to Route 9, south along Route 9 to Route 22 south of Keeseville, south along Route 22 to the west shore of South Bay along and around the shoreline of South Bay to Route 22 on the east shore of South Bay, southeast along Route 22 to Route 4, northeast along Route 4 to the New York-Vermont boundary.

Northeast Goose Area: The same as the Northeastern Waterfowl Hunting Zone, which is that area of New York State lying north of a continuous line extending from Lake Ontario east along the north shore of the Salmon River to Interstate 81, south along Interstate Route 81 to Route 31, east along Route 31 to Route 13, north along Route 13 to Route 49, east along Route 49 to Route 365, east along Route 365 to Route 28, east along Route 28 to Route 29, east along Route 29 to Route 22 at Greenwich Junction, north along Route 22 to Washington County Route 153, east along CR 153 to the New York-Vermont boundary, exclusive of the Lake Champlain Zone.

East Central Goose Area: That area of New York State lying inside of a continuous line extending from Interstate Route 81 in Cicero, east along Route 31 to Route 13, north along Route 13 to Route 49, east along Route 49 to Route 365, east along Route 365 to Route 28, east along Route 28 to Route 29, east along Route 29 to Route 147 at Kimball Corners, south along Route 147 to Schenectady County Route 40 (West Glenville Road), west along Route 40 to Touareuna Road, south along Touareuna Road to Schenectady County Route 59, south along Route 59 to State Route 5, east along Route 5 to the Lock 9 bridge, southwest along the Lock 9 bridge to Route 5S, southeast along Route 5S to Schenectady County Route 58, southwest along Route 58 to the NYS Thruway, south along the Thruway to Route 7, southwest along Route 7 to Schenectady County Route 103, south along Route 103 to Route 406, east along Route 406 to Schenectady County Route 99 (Windy Hill Road), south along Route 99 to Dunnsville Road, south along Dunnsville Road to Route 397, southwest along Route 397 to Route 146 at Altamont, west along Route 146 to Albany County Route 252, northwest along Route 252 to Schenectady County Route 131, north along Route 131 to Route 7, west along Route 7 to Route 10 at Richmondville, south on Route 10 to Route 23 at Stamford, west along Route 23 to Route 7 in Oneonta, southwest along Route 7 to Route 79 to Interstate Route 88 near Harpursville, west along Route 88 to Interstate Route 81, north along Route 81 to the point of beginning.

West Central Goose Area: That area of New York State lying within a continuous line beginning at the point where the northerly extension of Route 269 (County Line Road on the Niagara-Orleans County boundary) meets the International boundary with Canada, south to the shore of Lake Ontario at the eastern boundary of Golden Hill State Park, south along the extension of Route 269 and Route 269 to Route 104 at Jeddo, west along Route 104 to Niagara County Route 271, south along Route 271 to Route 31E at Middleport, south along Route 31E to Route 31, west along Route 31 to Griswold Street, south along Griswold Street to Ditch Road, south along Ditch Road to Foot Road, south along Foot Road to the north bank of Tonawanda Creek, west along the north bank of Tonawanda Creek to Route 93, south along Route 93 to Route 5, east along Route 5 to Crittenden-Murrays Corners Road, south on Crittenden-Murrays Corners Road to the NYS Thruway, east along the Thruway 90 to Route 98 (at Thruway Exit 48) in Batavia, south along Route 98 to Route 20, east along Route 20 to Route 19 in Pavilion Center, south along Route 19 to Route 63, southeast along Route 63 to Route 246, south along Route 246 to Route 39 in Perry, northeast along Route 39 to Route 20A, northeast along Route 20A to Route 20, east along Route 20 to Route 364 (near Canandaigua), south and east along Route 364 to Yates County Route 18 (Italy Valley Road), southwest along Route 18 to Yates County Route 34, east along Route 34 to Yates County Route 32, south along Route 32 to Steuben County Route 122, south along Route 122 to Route 53, south along Route 53 to Steuben County Route 74, east along Route 74 to Route 54A (near Pulteney), south along Route 54A to Steuben County Route 87, east along Route 87 to Steuben County Route 96, east along Route 96 to Steuben County Route 114, east along Route 114 to Schuyler County Route 23, east and southeast along Route 23 to Schuyler County Route 28, southeast along Route

28 to Route 409 at Watkins Glen, south along Route 409 to Route 14, south along Route 14 to Route 224 at Montour Falls, east along Route 224 to Route 228 in Odessa, north along Route 228 to Route 79 in Mecklenburg, east along Route 79 to Route 366 in Ithaca, northeast along Route 366 to Route 13, northeast along Route 13 to Interstate Route 81 in Cortland, north along Route 81 to the north shore of the Salmon River to shore of Lake Ontario, extending generally northwest in a straight line to the nearest point of the International boundary with Canada, south and west along the International boundary to the point of beginning.

Hudson Valley Goose Area: That area of New York State lying within a continuous line extending from Route 4 at the New York-Vermont boundary, west and south along Route 4 to Route 149 at Fort Ann, west on Route 149 to Route 9, south along Route 9 to Interstate Route 87 (at Exit 20 in Glens Falls), south along Route 87 to Route 29, west along Route 29 to Route 147 at Kimball Corners, south along Route 147 to Schenectady County Route 40 (West Glenville Road), west along Route 40 to Touareuna Road, south along Touareuna Road to Schenectady County Route 59, south along Route 59 to State Route 5, east along Route 5 to the Lock 9 bridge, southwest along the Lock 9 bridge to Route 5S, southeast along Route 5S to Schenectady County Route 58, southwest along Route 58 to the NYS Thruway, south along the Thruway to Route 7, southwest along Route 7 to Schenectady County Route 103, south along Route 103 to Route 406, east along Route 406 to Schenectady County Route 99 (Windy Hill Road), south along Route 99 to Dunnsville Road, south along Dunnsville Road to Route 397, southwest along Route 397 to Route 146 at Altamont, southeast along Route 146 to Main Street in Altamont, west along Main Street to Route 156, southeast along Route 156 to Albany County Route 307, southeast along Route 307 to Route 85A, southwest along Route 85A to Route 85, south along Route 85 to Route 443, southeast along Route 443 to Albany County Route 301 at Clarksville, southeast along Route 301 to Route 32, south along Route 32 to Route 23 at Cairo, west along Route 23 to Joseph Chadderdon Road, southeast along Joseph Chadderdon Road to Hearts Content Road (Greene County Route 31), southeast along Route 31 to Route 32, south along Route 32 to Greene County Route 23A, east along Route 23A to Interstate Route 87 (the NYS Thruway), south along Route 87 to Route 28 (Exit 19) near Kingston, northwest on Route 28 to Route 209, southwest on Route 209 to the New York-Pennsylvania boundary, southeast along the New York-Pennsylvania boundary to the New York-New Jersey boundary, southeast along the New York-New Jersey boundary to Route 210 near Greenwood Lake, northeast along Route 210 to Orange County Route 5, northeast along Orange County Route 5 to Route 105 in the Village of Monroe, east and north along Route 105 to Route 32, northeast along Route 32 to Orange County Route 107 (Quaker Avenue), east along Route 107 to Route 9W, north along Route 9W to the south bank of Moodna Creek, southeast along the south bank of Moodna Creek to the New Windsor-Cornwall town boundary, northeast along the New Windsor-Cornwall town boundary to the Orange-Dutchess County boundary (middle of the Hudson River), north along the county boundary to Interstate Route 84, east along Route 84 to the Dutchess-Putnam County boundary, east along the county boundary to the New York-Connecticut boundary, north along the New York-Connecticut boundary to the New York-Massachusetts boundary, north along the New York-Massachusetts boundary to the New York-Vermont boundary, north to the point of beginning.

Eastern Long Island Goose Area (NAP High Harvest Area): That area of Suffolk County lying east of a continuous line extending due south from the New York-Connecticut boundary to the northernmost end of Roanoke Avenue in the Town of Riverhead; then south on Roanoke Avenue (which becomes County Route 73) to State Route 25; then west on Route 25 to Peconic Avenue; then south on Peconic Avenue to County Route (CR) 104 (Riverleigh Avenue); then south on CR 104 to CR 31 (Old Riverhead Road); then south on CR 31 to Oak Street; then south on Oak Street to Potunk Lane; then west on Stevens Lane; then south on Jessup Avenue (in Westhampton Beach) to Dune Road (CR 89); then due south to international waters.

Western Long Island Goose Area (RP Area): That area of Westchester County and its tidal waters southeast of Interstate Route 95 and that area of Nassau and Suffolk Counties lying west of a continuous line extending due south from the New York-Connecticut boundary to the northernmost end of the Sunken Meadow State Parkway; then south on the Sunken Meadow Parkway to the Sagtikos State Parkway; then south on the Sagtikos Parkway to the Robert Moses State Parkway; then south on the Robert Moses Parkway to its southernmost end; then due south to international waters.

Central Long Island Goose Area (NAP Low Harvest Area): That area of Suffolk County lying between the Western and Eastern Long Island Goose Areas, as defined above.

South Goose Area: The remainder of New York State, excluding New York City.

Special Late Canada Goose Area: That area of the Central Long Island Goose Area lying north of State Route 25A and west of a continuous line extending northward from State Route 25A along Randall Road (near Shoreham) to North Country Road, then east to Sound Road and then north to Long Island Sound and then due north to the New York-Connecticut boundary.

North Carolina:

SJBP Hunt Zone: Includes the following Counties or portions of Counties: Anson, Cabarrus, Chatham, Davidson, Durham, Halifax (that portion east of NC 903), Montgomery (that portion west of NC 109), Northampton, Richmond (that portion south of NC 73 and west of US 220 and north of US 74), Rowan, Stanly, Union, and Wake.

RP Hunt Zone: Includes the following Counties or portions of Counties: Alamance, Alleghany, Alexander, Ashe, Avery, Beaufort, Bertie (that portion south and west of a line formed by NC 45 at the Washington Co. line to US 17 in Midway, US 17 in Midway to US 13 in Windsor, US 13 in Windsor to the Hertford Co. line), Bladen, Brunswick, Buncombe, Burke, Caldwell, Carteret, Caswell, Catawba, Cherokee, Clay, Cleveland, Columbus, Craven, Cumberland, Davie, Duplin, Edgecombe, Forsyth, Franklin, Gaston, Gates, Graham, Granville, Greene, Guilford, Halifax (that portion west of NC 903), Harnett, Haywood, Henderson, Hertford, Hoke, Iredell, Jackson, Johnston, Jones, Lee, Lenoir, Lincoln, McDowell, Macon, Madison, Martin, Mecklenburg, Mitchell, Montgomery (that portion that is east of NC 109), Moore, Nash, New Hanover, Onslow, Orange, Pamlico, Pender, Person, Pitt, Polk, Randolph, Richmond (all of the county with exception of that portion that is south of NC 73 and west of US 220 and north of US 74), Robeson, Rockingham, Rutherford, Sampson, Scotland, Stokes, Surry, Swain, Transylvania, Vance, Warren, Watauga, Wayne, Wilkes, Wilson, Yadkin, and Yancey.

Northeast Hunt Unit: Includes the following Counties or portions of Counties: Bertie (that portion north and east of a line formed by NC 45 at the Washington County line to US 17 in Midway, US 17 in Midway to US 13 in Windsor, US 13 in Windsor to the Hertford Co. line), Camden, Chowan,

Currituck, Dare, Hyde, Pasquotank, Perquimans, Tyrrell, and Washington.

Pennsylvania:

Resident Canada Goose Zone: All of Pennsylvania except for SJBP Zone and the area east of route SR 97 from the Maryland State Line to the intersection of SR 194, east of SR 194 to intersection of US Route 30, south of US Route 30 to SR 441, east of SR 441 to SR 743, east of SR 743 to intersection of I–81, east of I–81 to intersection of I–80, and south of I–80 to the New Jersey State line.

SJBP Zone: The area north of I–80 and west of I–79 including in the city of Erie west of Bay Front Parkway to and including the Lake Erie Duck zone (Lake Erie, Presque Isle, and the area within 150 yards of the Lake Erie Shoreline).

AP Zone: The area east of route SR 97 from Maryland State Line to the intersection of SR 194, east of SR 194 to intersection of US Route 30, south of US Route 30 to SR 441, east of SR 441 to SR 743, east of SR 743 to intersection of I–81, east of I–81 to intersection of I–80, south of I–80 to New Jersey State line.

Rhode Island:

Special Area for Canada Geese: Kent and Providence Counties and portions of the towns of Exeter and North Kingston within Washington County (see State regulations for detailed descriptions).

South Carolina:

Canada Goose Area: Statewide except for Clarendon County, that portion of Orangeburg County north of SC Highway 6, and that portion of Berkeley County north of SC Highway 45 from the Orangeburg County line to the junction of SC Highway 45 and State Road S–8–31 and that portion west of the Santee Dam.

Vermont:

Same zones as for ducks.

Virginia:

AP Zone: The area east and south of the following line—the Stafford County line from the Potomac River west to Interstate 95 at Fredericksburg, then south along Interstate 95 to Petersburg, then Route 460 (SE) to City of Suffolk, then south along Route 32 to the North Carolina line.

SJBP Zone: The area to the west of the AP Zone boundary and east of the following line: the ''Blue Ridge'' (mountain spine) at the West Virginia-Virginia Border (Loudoun County-Clarke County line) south to Interstate 64 (the Blue Ridge line follows county borders along the western edge of Loudoun-Fauquier-Rappahannock-Madison-Greene-Albemarle and into Nelson Counties), then east along Interstate Rt. 64 to Route 15, then south along Rt. 15 to the North Carolina line.

RP Zone: The remainder of the State west of the SJBP Zone.

West Virginia:

Same zones as for ducks.

Mississippi Flyway

Alabama:

Same zones as for ducks, but in addition:

SJBP Zone: That portion of Morgan County east of U.S. Highway 31, north of State Highway 36, and west of U.S. 231; that portion of Limestone County south of U.S. 72; and that portion of Madison County south of Swancott Road and west of Triana Road.

Arkansas:

Northwest Zone: Baxter, Benton, Boone, Carroll, Conway, Crawford, Faulkner, Franklin, Johnson, Logan, Madison, Marion, Newton, Perry, Pope, Pulaski, Searcy, Sebastian, Scott, Van Buren, Washington, and Yell Counties.

Illinois:

North Zone: That portion of the State north of a line extending west from the Indiana border along Interstate 80 to I–39, south along I–39 to Illinois Route 18, west along Illinois Route 18 to Illinois Route 29, south along Illinois Route 29 to Illinois Route 17, west along Illinois Route 17 to the Mississippi River, and due south across the Mississippi River to the Iowa border.

Central Zone: That portion of the State south of the North Goose Zone line to a line extending west from the Indiana border along I–70 to Illinois Route 4, south along Illinois Route 4 to Illinois Route 161, west along Illinois Route 161 to Illinois Route 158, south and west along Illinois Route 158 to Illinois Route 159, south along Illinois Route 159 to Illinois Route 3, south along Illinois Route 3 to St. Leo's Road, south along St. Leo's road to Modoc Road, west along Modoc Road to Modoc Ferry Road, southwest along Modoc Ferry Road to Levee Road, southeast along Levee Road to County Route 12 (Modoc Ferry entrance Road), south along County Route 12 to the Modoc Ferry route and southwest on the Modoc Ferry route across the Mississippi River to the Missouri border.

South Zone: Same zones as for ducks.

South Central Zone: Same zones as for ducks.

Indiana:

Same zones as for ducks but in addition:

Special Canada Goose Seasons

Late Canada Goose Season Zone: That part of the state encompassed by the following Counties: Steuben, Lagrange, Elkhart, St. Joseph, La Porte, Starke, Marshall, Kosciusko, Noble, De Kalb, Allen, Whitley, Huntington, Wells, Adams, Boone, Hamilton, Madison, Hendricks, Marion, Hancock, Morgan, Johnson, and Shelby.

Experimental Late Canada Goose Season Zone: That part of the state encompassed by the following Counties: Vermillion, Parke, Vigo, Clay, Sullivan, and Greene.

Iowa:

Same zones as for ducks.

Kentucky:

Western Zone: That portion of the State west of a line beginning at the Tennessee State line at Fulton and extending north along the Purchase Parkway to Interstate Highway 24, east along I–24 to U.S. Highway 641, north along U.S. 641 to U.S. 60, northeast along U.S. 60 to the Henderson County line, then south, east, and northerly along the Henderson County line to the Indiana State line.

Ballard Reporting Area: That area encompassed by a line beginning at the northwest city limits of Wickliffe in Ballard County and extending westward to the middle of the Mississippi River, north along the Mississippi River and along the low-water mark of the Ohio River on the Illinois shore to the Ballard-McCracken County line, south along the county line to Kentucky Highway 358, south along Kentucky 358 to U.S. Highway 60 at LaCenter, then southwest along U.S. 60 to the northeast city limits of Wickliffe.

Henderson-Union Reporting Area: Henderson County and that portion of Union County within the Western Zone.

Pennyroyal/Coalfield Zone: Butler, Daviess, Ohio, Simpson, and Warren Counties and all counties lying west to the boundary of the Western Goose Zone.

Louisiana:

Same zones as for ducks.

Michigan:

(a) North Zone—Same as North duck zone.

(b) Middle Zone—Same as Middle duck zone.

(c) South Zone—Same as South duck zone.

Tuscola/Huron Goose Management Unit (GMU): Those portions of Tuscola and Huron Counties bounded on the south by Michigan Highway 138 and Bay City Road, on the east by Colwood and Bay Port Roads, on the north by Kilmanagh Road and a line extending directly west off the end of Kilmanagh Road into Saginaw Bay to the west boundary, and on the west by the Tuscola-Bay County line and a line extending directly north off the end of the Tuscola-Bay County line into Saginaw Bay to the north boundary.

Allegan County GMU: That area encompassed by a line beginning at the junction of 136th Avenue and Interstate

Highway 196 in Lake Town Township and extending easterly along 136th Avenue to Michigan Highway 40, southerly along Michigan 40 through the city of Allegan to 108th Avenue in Trowbridge Township, westerly along 108th Avenue to 46th Street, northerly along 46th Street to 109th Avenue, westerly along 109th Avenue to I–196 in Casco Township, then northerly along I–196 to the point of beginning.

Saginaw County GMU: That portion of Saginaw County bounded by Michigan Highway 46 on the north; Michigan 52 on the west; Michigan 57 on the south; and Michigan 13 on the east. Muskegon Wastewater GMU: That portion of Muskegon County within the boundaries of the Muskegon County wastewater system, east of the Muskegon State Game Area, in sections 5, 6, 7, 8, 17, 18, 19, 20, 29, 30, and 32, T10N R14W, and sections 1, 2, 10, 11, 12, 13, 14, 24, and 25, T10N R15W, as posted.

Special Canada Goose Seasons:

Southern Michigan Late Season Canada Goose Zone: Same as the South Duck Zone excluding Tuscola/Huron Goose Management Unit (GMU), Allegan County GMU, Saginaw County GMU, and Muskegon Wastewater GMU.

Minnesota:

Rochester Goose Zone: That part of the State within the following described boundary: Beginning at the intersection of State Trunk Highway (STH) 247 and County State Aid Highway (CSAH) 4, Wabasha County; thence along CSAH 4 to CSAH 10, Olmsted County; thence along CSAH 10 to CSAH 9, Olmsted County; thence along CSAH 9 to CSAH 22, Winona County; thence along CSAH 22 to STH 74; thence along STH 74 to STH 30; thence along STH 30 to CSAH 13, Dodge County; thence along CSAH 13 to U.S. Highway 14; thence along U.S. Highway 14 to STH 57; thence along STH 57 to CSAH 24, Dodge County; thence along CSAH 24 to CSAH 13, Olmsted County; thence along CSAH 13 to U.S. Highway 52; thence along U.S. Highway 52 to CSAH 12, Olmsted County; thence along CSAH 12 to STH 247; thence along STH 247 to the point of beginning.

Missouri:

Same zones as for ducks.

Ohio:

Lake Erie Goose Zone: That portion of Ohio north of a line beginning at the Michigan border and extending south along Interstate 75 to Interstate 280, south on Interstate 280 to Interstate 80, and east on Interstate 80 to the Pennsylvania border.

North Zone: That portion of Ohio north of a line beginning at the Indiana border and extending east along Interstate 70 to the West Virginia border excluding the portion of Ohio within the Lake Erie Goose Zone.

South Zone: The remainder of Ohio

Tennessee:

Southwest Zone: That portion of the State south of State Highways 20 and 104, and west of U.S. Highways 45 and 45W.

Northwest Zone: Lake, Obion, and Weakley Counties and those portions of Gibson and Dyer Counties not included in the Southwest Tennessee Zone.

Kentucky/Barkley Lakes Zone: That portion of the State bounded on the west by the eastern boundaries of the Northwest and Southwest Zones and on the east by State Highway 13 from the Alabama State line to Clarksville and U.S. Highway 79 from Clarksville to the Kentucky State line.

Wisconsin:

Same zones as for ducks but in addition:

Horicon Zone: That area encompassed by a line beginning at the intersection of State Highway 21 and the Fox River in Winnebago County and extending westerly along State 21 to the west boundary of Winnebago County, southerly along the west boundary of Winnebago County to the north boundary of Green Lake County, westerly along the north boundaries of Green Lake and Marquette Counties to State 22, southerly along State 22 to State 33, westerly along State 33 to Interstate Highway 39, southerly along Interstate Highway 39 to Interstate Highway 90/94, southerly along I–90/94 to State 60, easterly along State 60 to State 83, northerly along State 83 to State 175, northerly along State 175 to State 33, easterly along State 33 to U.S. Highway 45, northerly along U.S. 45 to the east shore of the Fond Du Lac River, northerly along the east shore of the Fond Du Lac River to Lake Winnebago, northerly along the western shoreline of Lake Winnebago to the Fox River, then westerly along the Fox River to State 21.

Exterior Zone: That portion of the State not included in the Horicon Zone.

Mississippi River Subzone: That area encompassed by a line beginning at the intersection of the Burlington Northern & Santa Fe Railway and the Illinois State line in Grant County and extending northerly along the Burlington Northern & Santa Fe Railway to the city limit of Prescott in Pierce County, then west along the Prescott city limit to the Minnesota State line.

Brown County Subzone: That area encompassed by a line beginning at the intersection of the Fox River with Green Bay in Brown County and extending southerly along the Fox River to State Highway 29, northwesterly along State 29 to the Brown County line, south, east, and north along the Brown County line to Green Bay, due west to the midpoint of the Green Bay Ship Channel, then southwesterly along the Green Bay Ship Channel to the Fox River.

Central Flyway

Colorado (Central Flyway Portion):

Northern Front Range Area: All areas in Boulder, Larimer and Weld Counties from the Continental Divide east along the Wyoming border to U.S. 85, south on U.S. 85 to the Adams County line, and all lands in Adams, Arapahoe, Broomfield, Clear Creek, Denver, Douglas, Gilpin, and Jefferson Counties.

North Park Area: Jackson County.

South Park and San Luis Valley Area: All of Alamosa, Chaffee, Conejos, Costilla, Custer, Fremont, Lake, Park, Rio Grande and Teller Counties, and those portions of Saguache, Mineral and Hinsdale Counties east of the Continental Divide.

Remainder: Remainder of the Central Flyway portion of Colorado.

Eastern Colorado Late Light Goose Area: That portion of the State east of Interstate Highway 25.

Nebraska:

Dark Geese

Niobrara Unit: That area contained within and bounded by the intersection of the South Dakota State line and the eastern Cherry County line, south along the Cherry County line to the Niobrara River, east to the Norden Road, south on the Norden Road to U.S. Hwy 20, east along U.S. Hwy 20 to NE Hwy 14, north along NE Hwy 14 to NE Hwy 59 and County Road 872, west along County Road 872 to the Knox County Line, north along the Knox County Line to the South Dakota State line. Where the Niobrara River forms the boundary, both banks of the river are included in the Niobrara Unit.

East Unit: That area north and east of U.S. 81 at the Kansas-Nebraska State line, north to NE Hwy 91, east to U.S. 275, south to U.S. 77, south to NE 91, east to U.S. 30, east to Nebraska-Iowa State line.

Platte River Unit: That area north and west of U.S. 81 at the Kansas—Nebraska State line, north to NE Hwy 91, west along NE 91 to NE 11, north to the Holt County line, west along the northern border of Garfield, Loup, Blaine and Thomas Counties to the Hooker County line, south along the Thomas-Hooker County lines to the McPherson County line, east along the south border of Thomas County to the western line of Custer County, south along the Custer-Logan County line to NE 92, west to U.S. 83, north to NE 92, west to NE 61,

south along NE 61 to NE 92, west along NE 92 to U.S. Hwy 26, south along U.S. Hwy 26 to Keith County Line, south along Keith County Line to the Colorado State line.

Panhandle Unit: That area north and west of Keith-Deuel County Line at the Nebraska-Colorado State line, north along the Keith County Line to U.S. Hwy 26, west to NE Hwy 92, east to NE Hwy 61, north along NE Hwy 61 to NE Hwy 2, west along NE Hwy 2 to the corner formed by Garden-Grant-Sheridan Counties, west along the north border of Garden, Morrill, and Scotts Bluff Counties to the intersection of the Interstate Canal, west to the Wyoming State line.

North-Central Unit: The remainder of the State.

Light Geese

Rainwater Basin Light Goose Area (West): The area bounded by the junction of U.S. 283 and U.S. 30 at Lexington, east on U.S. 30 to U.S. 281, south on U.S. 281 to NE 4, west on NE 4 to U.S. 34, continue west on U.S. 34 to U.S. 283, then north on U.S. 283 to the beginning.

Rainwater Basin Light Goose Area (East): The area bounded by the junction of U.S. 281 and U.S. 30 at Grand Island, north and east on U.S. 30 to NE 14, south to NE 66, east to US 81, north to NE 92, east on NE 92 to NE 15, south on NE 15 to NE 4, west on NE 4 to U.S. 281, north on U.S. 281 to the beginning.

Remainder of State: The remainder portion of Nebraska.

New Mexico (Central Flyway Portion):

Dark Geese

Middle Rio Grande Valley Unit: Sierra, Socorro, and Valencia Counties.

Remainder: The remainder of the Central Flyway portion of New Mexico.

North Dakota:

Missouri River Canada Goose Zone: The area within and bounded by a line starting where ND Hwy 6 crosses the South Dakota border; thence north on ND Hwy 6 to I–94; thence west on I–94 to ND Hwy 49; thence north on ND Hwy 49 to ND Hwy 200; thence north on Mercer County Rd. 21 to the section line between sections 8 and 9 (T146N–R87W); thence north on that section line to the southern shoreline to Lake Sakakawea; thence east along the southern shoreline (including Mallard Island) of Lake Sakakawea to US Hwy 83; thence south on US Hwy 83 to ND Hwy 200; thence east on ND Hwy 200 to ND Hwy 41; thence south on ND Hwy 41 to US Hwy 83; thence south on US Hwy 83 to I–94; thence east on I–94 to US Hwy 83; thence south on US Hwy 83 to the South Dakota border; thence west along the South Dakota border to ND Hwy 6.

Rest of State: Remainder of North Dakota.

South Dakota:

Canada Geese

Unit 1: Remainder of South Dakota.

Unit 2: Gregory, Hughes, Lyman, Perkins, and Stanley Counties; that portion of Potter County west of US Highway 83; that portion of Sully County west of US Highway 83; that portion of Bon Homme, Brule, Buffalo, Charles Mix, and Hyde County south and west of a line beginning at the Hughes-Hyde County line on SD Highway 34, east to Lees Boulevard, southeast to SD 34, east 7 miles to 350th Avenue, south to I–90, south and east on SD Highway 50 to Geddes, east on 285th Street to US Highway 281, south on US Highway 281 to SD 50, east and south on SD 50 to the Bon Homme-Yankton County boundary; that portion of Fall River County east of SD Highway 71 and US Highway 385; that portion of Custer County east of SD Highway 79 and south of French Creek; that portion of Dewey County south of BIA Road 8, BIA Road 9, and the section of US 212 east of BIA Road 8 junction.

Unit 3: Bennett County.

Texas:

Northeast Goose Zone: That portion of Texas lying east and north of a line beginning at the Texas-Oklahoma border at U.S. 81, then continuing south to Bowie and then southeasterly along U.S. 81 and U.S. 287 to I–35W and I–35 to the juncture with I–10 in San Antonio, then east on I–10 to the Texas-Louisiana border.

Southeast Goose Zone: That portion of Texas lying east and south of a line beginning at the International Toll Bridge at Laredo, then continuing north following I–35 to the juncture with I–10 in San Antonio, then easterly along I–10 to the Texas-Louisiana border.

West Goose Zone: The remainder of the State.

Wyoming (Central Flyway Portion):

Dark Geese

Zone C1: Converse, Hot Springs, Natrona, and Washakie Counties, and the portion of Park County east of the Shoshone National Forest boundary and south of a line beginning where the Shoshone National Forest boundary crosses Park County Road 8VC, easterly along said road to Park County Road 1AB, easterly along said road to Wyoming Highway 120, northerly along said highway to Wyoming Highway 294, southeasterly along said highway to Lane 9, easterly along said lane to the town of Powel and Wyoming Highway 14A, easterly along said highway to the Park County and Big Horn County Line.

Zone C2: Albany, Campbell, Crook, Johnson, Laramie, Niobrara, Sheridan, and Weston Counties, and that portion of Carbon County east of the Continental Divide; that portion of Park County west of the Shoshone National Forest boundary, and that portion of Park County north of a line beginning where the Shoshone National Forest boundary crosses Park County Road 8VC, easterly along said road to Park County Road 1AB, easterly along said road to Wyoming Highway 120, northerly along said highway to Wyoming Highway 294, southeasterly along said highway to Lane 9, easterly along said lane to the town of Powel and Wyoming Highway 14A, easterly along said highway to the Park County and Big Horn County Line.

Pacific Flyway

Arizona:

North Zone: Game Management Units 1–5, those portions of Game Management Units 6 and 8 within Coconino County, and Game Management Units 7, 9, and 12A.

South Zone: Those portions of Game Management Units 6 and 8 in Yavapai County, and Game Management Units 10 and 12B–45.

California:

Northeastern Zone: In that portion of California lying east and north of a line beginning at the intersection of Interstate 5 with the California-Oregon line; south along Interstate 5 to its junction with Walters Lane south of the town of Yreka; west along Walters Lane to its junction with Easy Street; south along Easy Street to the junction with Old Highway 99; south along Old Highway 99 to the point of intersection with Interstate 5 north of the town of Weed; south along Interstate 5 to its junction with Highway 89; east and south along Highway 89 to main street Greenville; north and east to its junction with North Valley Road; south to its junction with Diamond Mountain Road; north and east to its junction with North Arm Road; south and west to the junction of North Valley Road; south to the junction with Arlington Road (A22); west to the junction of Highway 89; south and west to the junction of Highway 70; east on Highway 70 to Highway 395; south and east on Highway 395 to the point of intersection with the California-Nevada State line; north along the California-Nevada State line to the junction of the California-Nevada-Oregon State lines west along the California-Oregon State line to the point of origin.

Colorado River Zone: Those portions of San Bernardino, Riverside, and Imperial Counties east of a line extending from the Nevada border south along U.S. 95 to Vidal Junction; south on a road known as ''Aqueduct Road''

in San Bernardino County through the town of Rice to the San Bernardino-Riverside County line; south on a road known in Riverside County as the ''Desert Center to Rice Road'' to the town of Desert Center; east 31 miles on I–10 to the Wiley Well Road; south on this road to Wiley Well; southeast along the Army-Milpitas Road to the Blythe, Brawley, Davis Lake intersections; south on the Blythe-Brawley paved road to the Ogilby and Tumco Mine Road; south on this road to U.S. 80; east 7 miles on U.S. 80 to the Andrade-Algodones Road; south on this paved road to the Mexican border at Algodones, Mexico.

Southern Zone: That portion of southern California (but excluding the Colorado River Zone) south and east of a line extending from the Pacific Ocean east along the Santa Maria River to CA 166 near the City of Santa Maria; east on CA 166 to CA 99; south on CA 99 to the crest of the Tehachapi Mountains at Tejon Pass; east and north along the crest of the Tehachapi Mountains to CA 178 at Walker Pass; east on CA 178 to U.S. 395 at the town of Inyokern; south on U.S. 395 to CA 58; east on CA 58 to I–15; east on I–15 to CA 127; north on CA 127 to the Nevada border.

Imperial County Special Management Area: The area bounded by a line beginning at Highway 86 and the Navy Test Base Road; south on Highway 86 to the town of Westmoreland; continue through the town of Westmoreland to Route S26; east on Route S26 to Highway 115; north on Highway 115 to Weist Rd.; north on Weist Rd. to Flowing Wells Rd.; northeast on Flowing Wells Rd. to the Coachella Canal; northwest on the Coachella Canal to Drop 18; a straight line from Drop 18 to Frink Rd.; south on Frink Rd. to Highway 111; north on Highway 111 to Niland Marina Rd.; southwest on Niland Marina Rd. to the old Imperial County boat ramp and the water line of the Salton Sea; from the water line of the Salton Sea, a straight line across the Salton Sea to the Salinity Control Research Facility and the Navy Test Base Road; southwest on the Navy Test Base Road to the point of beginning.

Balance-of-State Zone: The remainder of California not included in the Northeastern, Southern, and the Colorado River Zones.

North Coast Special Management Area: The Counties of Del Norte and Humboldt.

Sacramento Valley Special Management Area: That area bounded by a line beginning at Willows south on I–5 to Hahn Road; easterly on Hahn Road and the Grimes-Arbuckle Road to Grimes; northerly on CA 45 to the junction with CA 162; northerly on CA 45/162 to Glenn; and westerly on CA 162 to the point of beginning in Willows.

Colorado (Pacific Flyway Portion):

West Central Area: Archuleta, Delta, Dolores, Gunnison, LaPlata, Montezuma, Montrose, Ouray, San Juan, and San Miguel Counties and those portions of Hinsdale, Mineral, and Saguache Counties west of the Continental Divide.

State Area: The remainder of the Pacific Flyway Portion of Colorado.

Idaho:

Zone 1: All lands and waters within the Fort Hall Indian Reservation, including private inholdings; Bannock County; Bingham County, except that portion within the Blackfoot Reservoir drainage; and Power County east of State Highway 37 and State Highway 39.

Zone 2: Adams, Bear Lake, Benewah, Bingham within the Blackfoot Reservoir drainage, Blaine, Bonner, Bonneville, Boundary, Butte, Camas, Caribou except the Fort Hall Indian Reservation, Clark, Clearwater, Custer, Franklin, Fremont, Idaho, Jefferson, Kootenai, Latah, Lemhi, Lewis, Madison, Nez Perce, Oneida, Power County west of State Highway 37 and State Highway 39, Shoshone, Teton, and Valley Counties.

Zone 3: Ada, Boise, Canyon, Cassia, Elmore, Gem, Gooding, Jerome, Lincoln, Minidoka, Owyhee, Payette, Twin Falls, and Washington Counties.

Montana (Pacific Flyway Portion):

East of the Divide Zone: The Pacific Flyway portion of the State located east of the Continental Divide.

West of the Divide Zone: The remainder of the Pacific Flyway portion of Montana.

Nevada:

Northeast Zone: All of Elko and White Pine Counties.

Northwest Zone: All of Carson City, Churchill, Douglas, Esmeralda, Eureka, Humboldt, Lander, Lyon, Mineral, Nye, Pershing, Storey, and Washoe Counties.

South Zone: All of Clark and Lincoln County.

New Mexico (Pacific Flyway Portion):

North Zone: The Pacific Flyway portion of New Mexico located north of I–40.

South Zone: The Pacific Flyway portion of New Mexico located south of I–40.

Oregon:

Southwest Zone: Those portions of Douglas, Coos, and Curry Counties east of Highway 101, and Josephine and Jackson Counties.

South Coast Zone: Those portions of Douglas, Coos, and Curry Counties west of Highway 101.

Northwest Special Permit Zone: That portion of western Oregon west and north of a line running south from the Columbia River in Portland along I–5 to OR 22 at Salem; then east on OR 22 to the Stayton Cutoff; then south on the Stayton Cutoff to Stayton and due south to the Santiam River; then west along the north shore of the Santiam River to I–5; then south on I–5 to OR 126 at Eugene; then west on OR 126 to Greenhill Road; then south on Greenhill Road to Crow Road; then west on Crow Road to Territorial Hwy; then west on Territorial Hwy to OR 126; then west on OR 126 to Milepost 19; then north to the intersection of the Benton and Lincoln County line; then north along the western boundary of Benton and Polk Counties to the southern boundary of Tillamook County; then west along the Tillamook County boundary to the Pacific Coast.

Lower Columbia/N. Willamette Valley Management Area: Those portions of Clatsop, Columbia, Multnomah, and Washington Counties within the Northwest Special Permit Zone.

Tillamook County Management Area: All of Tillamook County. The following portion of the Tillamook County Management Area is closed to goose hunting beginning at the point where Old Woods Rd crosses the south shores of Horn Creek, north on Old Woods Rd to Sand Lake Rd at Woods, north on Sand Lake Rd to the intersection with McPhillips Dr., due west (~200 yards) from the intersection to the Pacific coastline, south on the Pacific coastline to Neskowin Creek, east along the north shores of Neskowin Creek and then Hawk Creek to Salem Ave, east on Salem Ave in Neskowin to Hawk Ave, east on Hawk Ave to Hwy 101, north on Hwy 101 to Resort Dr., north on Resort Dr. to a point due west of the south shores of Horn Creek at its confluence with the Nestucca River, due east (~80 yards) across the Nestucca River to the south shores of Horn Creek, east along the south shores of Horn Creek to the point of beginning.

Northwest Zone: Those portions of Clackamas, Lane, Linn, Marion, Multnomah, and Washington Counties outside of the Northwest Special Permit Zone and all of Lincoln County.

Eastern Zone: Hood River, Wasco, Sherman, Gilliam, Morrow, Umatilla, Deschutes, Jefferson, Crook, Wheeler, Grant, Baker, Union, and Wallowa Counties.

Harney and Lake County Zone: All of Harney and Lake Counties.

Klamath County Zone: All of Klamath County.

Malheur County Zone: All of Malheur County.

Utah:

Northern Utah Zone: All of Cache and Rich Counties, and that portion of Box Elder County beginning at I–15 and the Weber-Box Elder County line; east and north along this line to the Weber-Cache County line; east along this line to the Cache-Rich County line; east and south along the Rich County line to the Utah-Wyoming State line; north along this line to the Utah-Idaho State line; west on this line to Stone, Idaho-Snowville, Utah road; southwest on this road to Locomotive Springs Wildlife Management Area; east on the county road, past Monument Point and across Salt Wells Flat, to the intersection with Promontory Road; south on Promontory Road to a point directly west of the northwest corner of the Bear River Migratory Bird Refuge boundary; east along an imaginary line to the northwest corner of the Refuge boundary; south and east along the Refuge boundary to the southeast corner of the boundary; northeast along the boundary to the Perry access road; east on the Perry access road to I–15; south on I–15 to the Weber-Box Elder County line.

Remainder-of-the-State Zone: The remainder of Utah.

Washington:

Area 1: Skagit, Island, and Snohomish Counties.

Area 2A (SW Quota Zone): Clark County, except portions south of the Washougal River; Cowlitz County; and Wahkiakum County.

Area 2B (SW Quota Zone): Pacific County.

Area 3: All areas west of the Pacific Crest Trail and west of the Big White Salmon River that are not included in Areas 1, 2A, and 2B.

Area 4: Adams, Benton, Chelan, Douglas, Franklin, Grant, Kittitas, Lincoln, Okanogan, Spokane, and Walla Walla Counties.

Area 5: All areas east of the Pacific Crest Trail and east of the Big White Salmon River that are not included in Area 4.

Brant

Pacific Flyway

California:

North Coast Zone: Del Norte, Humboldt and Mendocino Counties.

South Coast Zone: Balance of the State.

Washington:

Puget Sound Zone: Skagit County.

Coastal Zone: Pacific County.

Swans

Central Flyway

South Dakota: Aurora, Beadle, Brookings, Brown, Brule, Buffalo, Campbell, Clark, Codington, Davison, Deuel, Day, Edmunds, Faulk, Grant, Hamlin, Hand, Hanson, Hughes, Hyde, Jerauld, Kingsbury, Lake, Marshall, McCook, McPherson, Miner, Minnehaha, Moody, Potter, Roberts, Sanborn, Spink, Sully, and Walworth Counties.

Pacific Flyway

Montana (Pacific Flyway Portion)

Open Area: Cascade, Chouteau, Hill, Liberty, and Toole Counties and those portions of Pondera and Teton Counties lying east of U.S. 287–89.

Nevada

Open Area: Churchill, Lyon, and Pershing Counties.

Utah

Open Area: Those portions of Box Elder, Weber, Davis, Salt Lake, and Toole Counties lying west of I–15, north of I–80, and south of a line beginning from the Forest Street exit to the Bear River National Wildlife Refuge boundary; then north and west along the Bear River National Wildlife Refuge boundary to the farthest west boundary of the Refuge; then west along a line to Promontory Road; then north on Promontory Road to the intersection of SR 83; then north on SR 83 to I–84; then north and west on I–84 to State Hwy 30; then west on State Hwy 30 to the Nevada-Utah State line; then south on the Nevada-Utah State line to I–80.

[FR Doc. 2011–21484 Filed 8–25–11; 8:45 am]

BILLING CODE 4310–55–P

FEDERAL REGISTER

Vol. 76 Friday,

No. 166 August 26, 2011

Part III

Department of Education
Department of Health and Human Services

Applications for New Awards; Race to the Top—Early Learning Challenge; Notice

DEPARTMENT OF EDUCATION

DEPARTMENT OF HEALTH AND HUMAN SERVICES

Applications for New Awards; Race to the Top—Early Learning Challenge

AGENCIES: Department of Education and Department of Health and Human Services.

ACTION: Notice.

Overview Information

Race to the Top—Early Learning Challenge Notice inviting applications for new awards for fiscal year (FY) 2011.

Catalog of Federal Domestic Assistance (CFDA) Number: 84.412.

Dates: Applications Available: August 26, 2011.

Date of Meetings for Potential Applicants: To assist States in preparing the application and to respond to questions, the Department of Education (ED) and the Department of Health and Human Services (HHS) (collectively, the Departments) intend to host a Webinar with potential applicants on September 1, 2011, to review the requirements, selection criteria, and priorities for this competition. The Departments also plan to host a Technical Assistance Planning Workshop for potential applicants on September 13, 2011, in Washington, DC. Registration information and additional details for the September 1, 2011, Webinar; the September 13, 2011, workshop; and any other technical assistance events are on the Race to the Top-Early Learning (RTT–ELC) Web site at *http://www.ed.gov/programs/racetothetop-earlylearningchallenge.*

Deadline for Transmittal of Applications: October 19, 2011.

Deadline for Intergovernmental Review: December 19, 2011.

Full Text of Announcement

I. Funding Opportunity Description

Purpose of Program: The purpose of the RTT–ELC program is to improve the quality of early learning and development and close the achievement gap for children with high needs. The RTT–ELC grant competition focuses on improving early learning and development for young children by supporting States' efforts to increase the number and percentage of low-income and disadvantaged children in each age group of infants, toddlers, and preschoolers enrolled in high-quality early learning and development programs; and designing and implementing an integrated system of high-quality early learning and development programs and services.

Background: A critical focus of the Obama Administration is supporting America's youngest learners and helping ensure that children, especially young children with high needs, such as those who are low-income, English learners, and children with disabilities or developmental delays, enter kindergarten ready to succeed in school and in life. A robust body of research demonstrates that high-quality early learning and development programs and services can improve young children's health, social emotional and cognitive outcomes, enhance school readiness, and help close the wide school readiness gap [1] [2] that exists between children with high needs and their peers at the time they enter kindergarten.[3] [4]

To address this school readiness gap, the Administration has identified, as high priorities, strengthening the quality of early learning and development programs and increasing access to high-quality early learning programs for all children, including those with high needs. This commitment to early education is reflected in the RTT–ELC competition that we are announcing in this notice.

On May 25, 2011, Secretaries Duncan and Sebelius announced the RTT–ELC, a new $500 million State-level grant competition to be held in 2011 and authorized under the American Recovery and Reinvestment Act of 2009 (ARRA), as amended by section 1832(b) of the Department of Defense and Full-Year Continuing Appropriations Act, 2011. The Departments are administering this competition jointly. At its core, RTT–ELC demonstrates a strong commitment by the Administration to stimulate a national effort to make sure all children enter kindergarten ready to succeed. Through the RTT–ELC, the Administration seeks to help close the achievement gap between children with high needs and their peers by supporting State efforts to build strong systems of early learning and development that provide increased access to high-quality programs for the children who need it most. This competition represents an unprecedented opportunity for States to focus deeply on their early learning and development systems for children from birth through age five. It is an opportunity to build a more unified approach to supporting young children and their families—an approach that increases access to high-quality early learning and development programs and services, and helps ensure that children enter kindergarten with the skills, knowledge, and dispositions toward learning they need to be successful.

The RTT–ELC competition does not create new early learning and development programs, nor is it a vehicle for maintenance of the status quo. Rather, the RTT–ELC program will support States that demonstrate their commitment to integrating and aligning resources and policies across all of the State agencies that administer public funds related to early learning and development. It will further provide incentives to the States that commit to and implement high-quality early learning and development programs statewide.

As explained more fully elsewhere in this notice, given the tight timeline for obligating funds and in order to provide States maximum time to prepare their applications for this competition, notice-and-comment rulemaking is being waived for this competition. Specifically, we are waiving rulemaking for the priorities, requirements, definitions, and selection criteria for this new competition under section 437(d)(1) of the General Education Provisions Act (GEPA). However, we have solicited public participation in two important ways as we developed an approach to conducting and implementing this competition. First, we invited the public to provide general input on the program from May 25 through June 30 on the ED.gov Blog. In response to this invitation, we received a total of 199 responses, which we considered in our development of this notice. From July 1 to July 11, we posted on ED's Web site a draft Executive Summary of the competition, which included draft competition priorities, requirements, definitions, and selection criteria, and we invited public input on each of these elements of the competition. During this period, we received 349 responses reflecting the

[1] Camilli, G., Vargas, S., Ryan, S., & Barnett, W. S. (2010). Meta-analysis of the effects of early education interventions on cognitive and social development. *Teachers College Record, 112*(3), 579–620.

[2] Reynolds, A.J., Temple, J.A., Ou, S., Arteaga, I.A., & White, B.A.B. (2011). School-based early childhood education and age-28 well-being: effects by timing, dosage, and subgroups. Science, Retrieved from *http://www.sciencemag.org/content/early/2011/06/08/science.1203618.abstract__doi:__10.1126/science.1203618.*

[3] Princiotta, D., Flanagan, K. D., and Germino Hausken, E. (2006). *Fifth Grade: Findings From The Fifth-Grade Follow-up of the Early Childhood Longitudinal Study, Kindergarten Class of 1998–99 (ECLS–K). (NCES 2006–038) U.S. Department of Education.*

[4] Halle, T., Forry, N., Hair, E., Perper, K., Wandner, L., Wessel, J., & Vick, J. (2009). *Disparities in Early Learning and Development: Lessons from the Early Childhood Longitudinal Study—Birth Cohort (ECLS–B).* Washington, DC: Child Trends.

viewpoints of a variety of individuals and early childhood, health, and education organizations. These we also considered in our development of this notice.

Current State Early Learning and Development Systems

Many early learning and development programs and services co-exist within States, including Head Start/Early Head Start programs, the Child Care and Development Fund (CCDF) program (pursuant to the Child Care and Development Block Grant Act (42 U.S.C. 9858 *et seq.*)), State-funded preschool, programs authorized under section 619 of part B of the Individuals with Disabilities Education Act (IDEA) and part C of IDEA, and other State and locally supported programs. Each of these programs has its own funding stream and accompanying requirements, standards, expectations, policies, and procedures. Each also has its own unique strengths and makes unique contributions to young children and their families. For States, the challenges to be addressed by RTT–ELC are to sustain and build on the strengths of these programs, acknowledge and appreciate their differences, reduce inefficiency, improve quality, and ultimately deliver a coordinated set of services and experiences that support young children's success in school and beyond.

The RTT–ELC Vision for State Early Learning and Development Systems

Through the RTT–ELC competition, we intend to fund applications that demonstrate a State's commitment and capacity to building a statewide system that raises the quality of early learning and development programs so that all children receive the support they need to enter kindergarten ready to succeed. Just as career and college readiness were at the heart of ED's Race to the Top Phase 1 and Phase 2 competitions, a commitment to building school readiness for children entering kindergarten is at the heart of this competition.

As was the case with Race to the Top Phase 1 and Phase 2, the bar to receive an RTT–ELC grant will be high. And just as those first two phases of Race to the Top were organized around State commitments to four specific reform assurances articulated in the ARRA, RTT–ELC is organized around five key areas of reform. These five key areas represent the foundation of an effective early learning and development reform agenda that is focused on school readiness and ongoing academic success. They are central to this competition's priorities, requirements, and selection criteria, and are as follows:

(A) Successful State Systems;

(B) High-Quality, Accountable Programs;

(C) Promoting Early Learning and Development Outcomes for Children;

(D) A Great Early Childhood Education Workforce; and

(E) Measuring Outcomes and Progress.

The first two of these, (A) and (B), are core areas of focus for this competition. As such, they are referred to throughout this notice as ''Core Areas,'' and applicants are required to respond to all selection criteria under these Core Areas. The reform areas in (C), (D), and (E) are areas where applicants will direct targeted attention to specific activities that are relevant to their State's context. In this notice, we refer to these areas as ''Focused Investment Areas,'' and applicants are required to address each Focused Investment Area but not all of the selection criteria under them. A discussion of the five key areas of reform follows.

A. Successful State Systems

Successful State early learning and development systems are built on broad-based stakeholder participation and effective governance structures. They are guided by clearly articulated goals and strategies designed to deliver a coordinated set of programs, policies, and services that are responsive to the needs of children and families and effectively prepare young children for school success. The RTT–ELC competition will support States that demonstrate a commitment to creating and implementing a successful statewide early learning and development system and that effectively organize and align that system to provide the diversity of services and supports needed by children and families. Such a system can provide continuity and consistent levels of quality across delivery mechanisms and levels of care and education. Thus, under the priorities established for this competition, States must propose and implement ambitious plans for successful State systems of early learning and development that will have broad impact and can—

- Improve program quality and outcomes for young children;
- Increase the number of children with high needs attending high-quality early learning and development programs; and
- Help close the achievement gap between children with high needs and their peers by supporting efforts to increase kindergarten readiness.

B. High-Quality, Accountable Programs

The RTT–ELC competition will support States that develop a common set of program standards used statewide. This will help align programs such as Head Start, CCDF, IDEA, and Title I of the Elementary and Secondary Act (ESEA), and State-funded preschool to create a more unified statewide system of early learning and development. In addition, each State grantee must design and implement a tiered quality rating and improvement system that is based on consistent and demanding statewide program standards and that establishes meaningful program ratings. RTT–ELC promotes broad participation in the State's tiered quality rating and improvement system across a range of programs, active program improvement, and the publication of program ratings so that families can make informed decisions about which programs can best serve the needs of their children.

C. Promoting Early Learning and Development Outcomes for Children

The RTT–ELC competition is based on the premise that effective programs and services for young children must be built on a set of early learning and development standards that define what children should know and be able to do at different stages of development. These standards provide guidelines, articulate developmental milestones, and set expectations for the healthy growth and development of young children. This competition rewards States that will implement high-quality early learning and development standards and comprehensive systems of assessments aligned with these standards. The implementation of these standards and assessments will ensure that early childhood educators have the information they need to understand and support young children's growth and development across a broad range of domains so that significantly more young children enter kindergarten ready to succeed.

Improving early learning and development outcomes also requires that children are healthy and supported by their families. Services that address health and family supports are thus critical, and health and family engagement are key elements in high-quality early learning and development programs. RTT–ELC is designed to support States that focus on increasing access to quality programs and services that promote health and engage families in the care and education of their young children.

D. A Great Early Childhood Education Workforce

In early learning and development settings, nothing matters more to children's success than the adults caring for and teaching them, and the RTT–ELC competition acknowledges the importance of a strong early childhood workforce. Ensuring that children are ready for success in kindergarten depends on well-trained adults who have acquired the necessary knowledge, skills, and abilities to effectively support the learning and development of every child. Thus, the competition will reward States that work closely with postsecondary institutions and other parties to define a set of workforce competencies that are tied to the State's early learning and development standards. Further, the competition encourages States to increase retention and improve educator quality by supporting their workforce with professional development, career advancement opportunities, differentiated compensation, and incentives to improve their knowledge, skills, and abilities.

E. Measuring Outcomes and Progress

Collecting, organizing, and understanding evidence of young children's progress across a range of domains is essential to ensuring that early learning and development programs are of high quality and that they meet the needs of every child. States are therefore encouraged to implement comprehensive data systems and to use the data to improve instruction, practices, services, and policies. In addition, through both a selection criterion and a competitive preference priority, States will be rewarded for implementing kindergarten entry assessments statewide that provide information across all domains of early learning and development, inform efforts to close the school-readiness gap, and inform instruction in the early elementary school grades.

By organizing this program around the five key reform areas described in this section, the RTT–ELC competition will help lead the way for States to challenge and rethink the status quo. Not every State will receive an RTT–ELC award through this competition, but every State can use this competition as an opportunity to commit to comprehensively strengthening its early learning and development system and ensuring that more children, including those with high needs, have access to high-quality early learning and development programs and services.

Priorities: This notice contains five (5) priorities: One (1) absolute priority, two (2) competitive preference priorities, and two (2) invitational priorities. These priorities are being established for the FY 2011 grant competition in accordance with section 437(d)(1) of GEPA, 20 U.S.C. 1232(d)(1).

Absolute Priority: For FY 2011, this priority is an absolute priority. Under 34 CFR 75.105(c)(3), we consider only applications that meet this priority. Applicants do not write a separate response to this priority. Rather, they will address this priority throughout their responses to the selection criteria as indicated below. A State meets the absolute priority if a majority of reviewers determines that the State has met the absolute priority.

Priority 1: Absolute Priority—Promoting School Readiness for Children with High Needs.

To meet this priority, the State's application must comprehensively and coherently address how the State will build a system that increases the quality of Early Learning and Development Programs [5] for Children with High Needs so that they enter kindergarten ready to succeed.

The State's application must demonstrate how it will improve the quality of Early Learning and Development Programs by integrating and aligning resources and policies across Participating State Agencies and by designing and implementing a common, statewide Tiered Quality Rating and Improvement System. In addition, to achieve the necessary reforms, the State must make strategic improvements in those specific reform areas that will most significantly improve program quality and outcomes for Children with High Needs. Therefore, the State must address those criteria from within each of the Focused Investment Areas (sections (C) Promoting Early Learning and Development Outcomes for Children, (D) A Great Early Childhood Education Workforce, and (E) Measuring Outcomes and Progress) that it believes will best prepare its Children with High Needs for kindergarten success.

Competitive Preference Priorities: For FY 2011, these priorities are competitive preference priorities. Under 34 CFR 75.105(c)(2)(i), up to ten (10) additional points will be awarded to an application depending on the extent to which the application meets Competitive Preference Priority 2, and ten (10) additional points (all or nothing) to an application that meets Competitive Preference Priority 3. Applicants that choose to address Competitive Preference Priority 2 must provide a narrative in the space provided in the application, and applicants that choose to address Competitive Preference Priority 3 must do so in Table [6] (A)(1)–12, or by writing to selection criterion (E)(1).

These priorities are:

Priority 2: Competitive Preference Priority—Including all Early Learning and Development Programs in the Tiered Quality Rating and Improvement System.

Competitive Preference Priority 2 is designed to increase the number of children from birth to kindergarten entry who are participating in programs that are governed by the State's licensing system and quality standards, with the goal that all licensed or State-regulated programs will participate. The State will receive points for this priority based on the extent to which the State has in place, or has a High-Quality Plan to implement no later than June 30, 2015—

(a) A licensing and inspection system that covers all programs that are not otherwise regulated by the State and that regularly care for two or more unrelated children for a fee in a provider setting; provided that if the State exempts programs for reasons other than the number of children cared for, the State may exclude those entities and reviewers will score this priority only on the basis of non-excluded entities; and

(b) A Tiered Quality Rating and Improvement System in which all licensed or State-regulated Early Learning and Development Programs participate.

Priority 3: Competitive Preference Priority—Understanding the Status of Children's Learning and Development at Kindergarten Entry.

To meet this priority, the State must, in its application—

(a) Demonstrate that it has already implemented a Kindergarten Entry Assessment that meets selection criterion (E)(1) by indicating that all elements in Table (A)(1)–12 are met; or

(b) Address selection criterion (E)(1) and earn a score of at least 70 percent of the maximum points available for that criterion.

Note: A State will earn all ten (10) competitive preference priority points if a majority of reviewers determines that the State has met the competitive preference priority. A State earns zero points if a majority of reviewers determines that the

[5] Defined terms are used throughout the notice and are indicated by capitalization.

[6] Tables referenced in this notice are included in the application package.

applicant has not met the competitive preference priority. Under option (a) above, an applicant does not earn competitive preference points if the reviewers determine that the State has not implemented a Kindergarten Entry Assessment that meets selection criterion (E)(1). Under option (b) above, an applicant does not earn competitive preference points if the State earns a score of less than 70 percent of the maximum points available for selection criterion (E)(1).

Invitational Priorities: For FY 2011, these priorities are invitational priorities. With an invitational priority, we signal our interest in receiving applications that meet the priority but, under 34 CFR 75.105(c)(1), we do not give an application that meets an invitational priority preference over other applications.

Priority 4: Invitational Priority—Sustaining Program Effects in the Early Elementary Grades.

The Departments are particularly interested in applications that describe the State's High-Quality Plan to sustain and build upon improved early learning outcomes throughout the early elementary school years, including by—

(a) Enhancing the State's current standards for kindergarten through grade 3 to align them with the Early Learning and Development Standards across all Essential Domains of School Readiness;

(b) Ensuring that transition planning occurs for children moving from Early Learning and Development Programs to elementary schools;

(c) Promoting health and family engagement, including in the early grades;

(d) Increasing the percentage of children who are able to read and do mathematics at grade level by the end of the third grade; and

(e) Leveraging existing Federal, State, and local resources, including but not limited to funds received under Title I and Title II of ESEA, as amended, and IDEA.

Priority 5: Invitational Priority—Encouraging Private-Sector Support.

The Departments are particularly interested in applications that describe how the private sector will provide financial and other resources to support the State and its Participating State Agencies or Participating Programs in the implementation of the State Plan.

Application Requirements:

Each applicant must meet the following application requirements:

(a) The State's application must be signed by the Governor or an authorized representative; an authorized representative from the Lead Agency; and an authorized representative from each Participating State Agency. The State must provide the required signatures in section IV, Application Assurances and Certifications of the application.

(b) The State must submit a certification from the State Attorney General or an authorized representative that the State's description of, and statements and conclusions in its application concerning, State law, statute, and regulation are complete and accurate and constitute a reasonable interpretation of State law, statute, and regulation. The State must provide this certification in section IV, Application Assurances and Certifications of the application.

(c) The State must complete the budget spreadsheets that are provided in the application package and submit the completed spreadsheet as part of its application. These spreadsheets should be included on the CD or DVD that the State submits as its application.

Note: The budget spreadsheets will be used by the Departments for budget reviews. However, the reviewers will not judge or score these budget spreadsheets. Reviewers will limit their evaluation of the State's response to (A)(4)(b) to the information provided by the State in the budget section of the application (see section VIII, Budget).

(d) The State must submit preliminary scopes of work for each Participating State Agency as part of the executed Memorandum of Understanding (MOU) or other binding agreement. (See Appendix C in this notice). Each preliminary scope of work must describe the portions of the State's proposed plans that the Participating State Agency is agreeing to implement. If a State is awarded an RTT–ELC grant, the State will have up to 90 days to complete final scopes of work for each Participating State Agency. (See section (k) of the *Program Requirements* in this notice.)

(e) The State must include a budget that details how it will use grant funds awarded under this competition, and funds from other Federal, State, private, and local sources to achieve the outcomes of the State Plan (as described in selection criterion (A)(4)(a)), and how the State will use funds awarded under this program to—

(1) Achieve its targets for increasing the number and percentage of Early Learning and Development Programs that are participating in the State's Tiered Quality Rating and Improvement System (as described in selection criterion (B)(2)(c)); and

(2) Achieve its targets for increasing the number and percentage of Children with High Needs who are enrolled in Early Learning and Development Programs that are in the top tiers of the State's Tiered Quality Rating and Improvement System (as described in selection criterion (B)(4)(c)).

(f) The State must provide an overall summary for the State Plan and a rationale for why it has chosen to address the selected criteria in each Focused Investment Area, including—

- How the State's choices build on its progress to date in each Focused Investment Area (as outlined in Tables (A)(1)6–13 and the narrative under (A)(1)); and
- Why these selected criteria will best achieve the State's ambitious yet achievable goals for improving program quality, improving outcomes for Children with High Needs statewide, and closing the readiness gap between Children with High Needs and their peers.

(g) The State, within each Focused Investment Area, must select and address—

- Two or more selection criteria within Focused Investment Area (C) Promoting Early Learning and Development Outcomes for Children; and
- One or more selection criteria within Focused Investment Areas (D) A Great Early Childhood Education Workforce and (E) Measuring Outcomes and Progress.

(h) Where the State is submitting a High-Quality Plan, the State must include in its application a detailed plan that is feasible and has a high probability of successful implementation and includes, but need not be limited to—

(1) The key goals;

(2) The key activities to be undertaken; the rationale for the activities; and, if applicable, where in the State the activities will be initially implemented, and where and how they will be scaled up over time to eventually achieve statewide implementation;

(3) A realistic timeline, including key milestones, for implementing each key activity;

(4) The party or parties responsible for implementing each activity and other key personnel assigned to each activity;

(5) Appropriate financial resources to support successful implementation of the plan;

(6) The information requested as supporting evidence, if any, together with any additional information the State believes will be helpful to peer reviewers in judging the credibility of the plan;

(7) The information requested in the performance measures, where applicable;

(8) How the State will address the needs of the different types of Early Learning and Development Programs, if applicable; and

(9) How the State will meet the needs of Children with High Needs, as well as the unique needs of special populations of Children with High Needs.

Program Requirements: If a State is awarded an RTT–ELC grant, it must meet the following requirements:

(a) The State must continue to participate in the programs authorized under section 619 of part B of IDEA and part C of IDEA; in the CCDF program; and in the Maternal, Infant, and Early Childhood Home Visiting (MIECHV) program (pursuant to section 511 of Title V of the Social Security Act, as added by Section 2951 of the Affordable Care Act of 2010 (Pub. L. 111–148)) for the duration of the grant.

(b) The State is prohibited from spending funds from the grant on the direct delivery of health services.

(c) The State must participate in RTT–ELC grantee technical assistance activities facilitated by ED or HHS, individually or in collaboration with other State grantees in order to share effective program practices and solutions and collaboratively solve problems, and must set aside $400,000 from its grant funds for this purpose.

(d) The State must—

(1) Comply with the requirements of any evaluation sponsored by ED or HHS of any of the State's activities carried out with the grant;

(2) Comply with the requirements of any cross-State evaluation—as part of a consortium of States—of any of the State's proposed reforms, if that evaluation is coordinated or funded by ED or HHS, including by using common measures and data collection instruments and collecting data necessary to the evaluation;

(3) Together with its independent evaluator, if any, cooperate with any technical assistance regarding evaluations provided by ED or HHS. The purpose of this technical assistance will be to ensure that the validation of the State's Tiered Quality Rating and Improvement System and any other evaluations conducted by States or their independent evaluators, if any, are of the highest quality and to encourage commonality in approaches where such commonality is feasible and useful;

(4) Submit to ED and HHS for review and comment its design for the validation of its Tiered Quality Rating and Improvement System (as described in selection criteria (B)(5)) and any other evaluations of activities included in the State Plan, including any activities that are part of the State's Focused Investment Areas, as applicable; and

(5) Make widely available through formal (*e.g.,* peer-reviewed journals) or informal (*e.g.,* newsletters) mechanisms, and in print or electronically, the results of any evaluations it conducts of its funded activities.

(e) The State must have a longitudinal data system that includes the 12 elements described in section 6401(e)(2)(D) of the America COMPETES Act by the date required under the State Fiscal Stabilization Fund (SFSF) grant and in accordance with Indicator (b)(1) of its approved SFSF plan.

(f) The State must comply with the requirements of all applicable Federal, State, and local privacy laws, including the requirements of the Family Educational Rights and Privacy Act, the Health Insurance Portability Accountability Act, and the privacy requirements in IDEA, and their applicable regulations.

(g) The State must ensure that the grant activities are implemented in accordance with all applicable Federal, State, and local laws.

(h) The State must provide researchers with access, consistent with the requirements of all applicable Federal State, and local privacy laws, to data from its Tiered Quality Rating and Improvement System and from the Statewide Longitudinal Data System and the State's coordinated early learning data system (if applicable) so that they can analyze the State's quality improvement efforts and answer key policy and practice questions.

(i) Unless otherwise protected as proprietary information by Federal or State law or a specific written agreement, the State must make any work (*e.g.,* materials, tools, processes, systems) developed under its grant freely available to the public, including by posting the work on a Web site identified or sponsored by ED or HHS. Any Web sites developed under this grant must meet government or industry-recognized standards for accessibility.

(j) Funds made available under an RTT–ELC grant must be used to supplement, not supplant, any Federal, State, or local funds that, in the absence of the funds awarded under this grant, would be available for increasing access to and improving the quality of Early Learning and Development Programs.

(k) For a State that is awarded an RTT–ELC grant, the State will have up to 90 days from the grant award notification date to complete final scopes of work for each Participating State Agency. These final scopes of work must contain detailed work plans that are consistent with their corresponding preliminary scopes of work and with the State's grant application, and must include the Participating State Agency's specific goals, activities, timelines, budgets, key personnel, and annual targets for key performance measures for the portions of the State's proposed plans that the Participating State Agency is agreeing to implement.

Program Definitions:

Children with High Needs means children from birth through kindergarten entry who are from Low-Income families or otherwise in need of special assistance and support, including children who have disabilities or developmental delays; who are English learners; who reside on ''Indian lands'' as that term is defined by section 8013(6) of the ESEA; who are migrant, homeless, or in foster care; and other children as identified by the State.

Common Education Data Standards (CEDS) means voluntary, common standards for a key set of education data elements (*e.g.,* demographics, program participation, transition, course information) at the early learning, K–12, and postsecondary levels developed through a national collaborative effort being led by the National Center for Education Statistics. CEDS focus on standard definitions, code sets, and technical specifications of a subset of key data elements and are designed to increase data interoperability, portability, and comparability across Early Learning and Development Programs and agencies, States, local educational agencies, and postsecondary institutions.

Comprehensive Assessment System means a coordinated and comprehensive system of multiple assessments, each of which is valid and reliable for its specified purpose and for the population with which it will be used, that organizes information about the process and context of young children's learning and development in order to help Early Childhood Educators make informed instructional and programmatic decisions and that conforms to the recommendations of the National Research Council reports on early childhood.

A Comprehensive Assessment System includes, at a minimum—

(a) Screening Measures;

(b) Formative Assessments;

(c) Measures of Environmental Quality; and

(d) Measures of the Quality of Adult-Child Interactions.

Data System Oversight Requirements means policies for ensuring the quality,

privacy, and integrity of data contained in a data system, including—

(a) A data governance policy that identifies the elements that are collected and maintained; provides for training on internal controls to system users; establishes who will have access to the data in the system and how the data may be used; sets appropriate internal controls to restrict access to only authorized users; sets criteria for determining the legitimacy of data requests; establishes processes that verify the accuracy, completeness, and age of the data elements maintained in the system; sets procedures for determining the sensitivity of each inventoried element and the risk of harm if those data were improperly disclosed; and establishes procedures for disclosure review and auditing; and

(b) A transparency policy that informs the public, including families, Early Childhood Educators, and programs, of the existence of data systems that house personally identifiable information, explains what data elements are included in such a system, enables parental consent to disclose personally identifiable information as appropriate, and describes allowable and potential uses of the data.

Early Childhood Educator means any professional working in an Early Learning and Development Program, including but not limited to center-based and family child care providers; infant and toddler specialists; early intervention specialists and early childhood special educators; home visitors; related services providers; administrators such as directors, supervisors, and other early learning and development leaders; Head Start teachers; Early Head Start teachers; preschool and other teachers; teacher assistants; family service staff; and health coordinators.

Early Learning and Development Program means any (a) State-licensed or State-regulated program or provider, regardless of setting or funding source, that provides early care and education for children from birth to kindergarten entry, including, but not limited to, any program operated by a child care center or in a family child care home; (b) preschool program funded by the Federal Government or State or local educational agencies (including any IDEA-funded program); (c) Early Head Start and Head Start program; and (d) a non-relative child care provider who is not otherwise regulated by the State and who regularly cares for two or more unrelated children for a fee in a provider setting. A State should include in this definition other programs that may deliver early learning and development services in a child's home, such as the Maternal, Infant and Early Childhood Home Visiting; Early Head Start; and part C of IDEA.[7]

Early Learning and Development Standards means a set of expectations, guidelines, or developmental milestones that—

(a) Describe what all children from birth to kindergarten entry should know and be able to do and their disposition toward learning;

(b) Are appropriate for each age group (*e.g.,* infants, toddlers, and preschoolers); for English learners; and for children with disabilities or developmental delays;

(c) Cover all Essential Domains of School Readiness; and

(d) Are universally designed and developmentally, culturally, and linguistically appropriate.

Early Learning Intermediary Organization means a national, statewide, regional, or community-based organization that represents one or more networks of Early Learning and Development Programs in the State and that has influence or authority over them. Such Early Learning Intermediary Organizations include, but are not limited to, Child Care Resource and Referral Agencies; State Head Start Associations; Family Child Care Associations; State affiliates of the National Association for the Education of Young Children; State affiliates of the Council for Exceptional Children's Division of Early Childhood; statewide or regional union affiliates that represent Early Childhood Educators; affiliates of the National Migrant and Seasonal Head Start Association; the National Tribal, American Indian, and Alaskan Native Head Start Association; and the National Indian Child Care Association.

Essential Data Elements means the critical child, program, and workforce data elements of a coordinated early learning data system, including—

(a) A unique statewide child identifier or another highly accurate, proven method to link data on that child, including Kindergarten Entry Assessment data, to and from the Statewide Longitudinal Data System and the coordinated early learning data system (if applicable);

(b) A unique statewide Early Childhood Educator identifier;

(c) A unique program site identifier;

(d) Child and family demographic information;

(e) Early Childhood Educator demographic information, including data on educational attainment and State credential or licenses held, as well as professional development information;

(f) Program-level data on the program's structure, quality, child suspension and expulsion rates, staff retention, staff compensation, work environment, and all applicable data reported as part of the State's Tiered Quality Rating and Improvement System; and

(g) Child-level program participation and attendance data.

Essential Domains of School Readiness means the domains of language and literacy development, cognition and general knowledge (including early mathematics and early scientific development), approaches toward learning, physical well-being and motor development (including adaptive skills), and social and emotional development.

Formative Assessment (also known as a classroom-based or ongoing assessment) means assessment questions, tools, and processes—

(a) That are—

(1) Specifically designed to monitor children's progress in meeting the Early Learning and Development Standards;

(2) Valid and reliable for their intended purposes and their target populations;

(3) Linked directly to the curriculum; and

(b) The results of which are used to guide and improve instructional practices.

High-Quality Plan means any plan developed by the State to address a selection criterion or priority in this notice that is feasible and has a high probability of successful implementation and at a minimum includes—

(a) The key goals;

(b) The key activities to be undertaken; the rationale for the activities; and, if applicable, where in the State the activities will be initially implemented, and where and how they will be scaled up over time to eventually achieve statewide implementation;

(c) A realistic timeline, including key milestones, for implementing each key activity;

(d) The party or parties responsible for implementing each activity and other key personnel assigned to each activity;

(e) Appropriate financial resources to support successful implementation of the plan;

[7] *Note:* Such home-based programs and services will most likely not participate in the State's Tiered Quality Rating and Improvement System unless the State has developed a set of Tiered Program Standards specifically for home-based programs and services.

(f) The information requested as supporting evidence, if any, together with any additional information the State believes will be helpful to peer reviewers in judging the credibility of the plan;

(g) The information requested in the performance measures, where applicable;

(h) How the State will address the needs of the different types of Early Learning and Development Programs, if applicable; and

(i) How the State will meet the needs of Children with High Needs, as well as the unique needs of special populations of Children with High Needs.

Kindergarten Entry Assessment means an assessment that—

(a) Is administered to children during the first few months of their admission into kindergarten;

(b) Covers all Essential Domains of School Readiness;

(c) Is used in conformance with the recommendations of the National Research Council [8] reports on early childhood; and

(d) Is valid and reliable for its intended purposes and for the target populations and aligned to the Early Learning and Development Standards.

Results of the assessment should be used to inform efforts to close the school readiness gap at kindergarten entry and to inform instruction in the early elementary school grades. This assessment should not be used to prevent children's entry into kindergarten.

Lead Agency means the State-level agency designated by the Governor for the administration of the RTT–ELC grant; this agency is the fiscal agent for the grant. The Lead Agency must be one of the Participating State Agencies.

Low-Income means having an income of up to 200 percent of the Federal poverty rate.

Measures of Environmental Quality means valid and reliable indicators of the overall quality of the early learning environment.

Measures of the Quality of Adult-Child Interactions means the measures obtained through valid and reliable processes for observing how teachers and caregivers interact with children, where such processes are designed to promote child learning and to identify strengths and areas for improvement for early learning professionals.

Participating State Agency means a State agency that administers public funds related to early learning and development and is participating in the State Plan. The following State agencies are required Participating State Agencies: The agencies that administer or supervise the administration of CCDF, the section 619 of part B of IDEA and part C of IDEA programs, State-funded preschool, home visiting, Title I of ESEA, the Head Start State Collaboration Grant, and the Title V Maternal and Child Care Block Grant, as well as the State Advisory Council on Early Childhood Education and Care, the State's Child Care Licensing Agency, and the State Education Agency. Other State agencies, such as the agencies that administer or supervise the administration of Child Welfare, Mental Health, Temporary Assistance for Needy Families (TANF), Community-Based Child Abuse Prevention, the Child and Adult Care Food Program, and the Adult Education and Family Literacy Act (AEFLA) may be Participating State Agencies if they elect to participate in the State Plan.

Participating Program means an Early Learning and Development Program that elects to carry out activities described in the State Plan.

Program Standards means the standards that serve as the basis for a Tiered Quality Rating and Improvement System and define differentiated levels of quality for Early Learning and Development Programs. Program Standards are expressed, at a minimum, by the extent to which—

(a) Early Learning and Development Standards are implemented through evidence-based activities, interventions, or curricula that are appropriate for each age group of infants, toddlers, and preschoolers;

(b) Comprehensive Assessment Systems are used routinely and appropriately to improve instruction and enhance program quality by providing robust and coherent evidence of—

(1) Children's learning and development outcomes; and

(2) Program performance;

(c) A qualified workforce improves young children's health, social, emotional, and educational outcomes;

(d) Strategies are successfully used to engage families in supporting their children's development and learning. These strategies may include, but are not limited to, parent access to the program, ongoing two-way communication with families, parent education in child development, outreach to fathers and other family members, training and support for families as children move to preschool and kindergarten, social networks of support, intergenerational activities, linkages with community supports and adult and family literacy programs, parent involvement in decision making, and parent leadership development;

(e) Health promotion practices include health and safety requirements; developmental, behavioral, and sensory screening, referral, and follow up; and the promotion of physical activity, healthy eating habits, oral health and behavioral health, and health literacy among parents; and

(f) Effective data practices include gathering Essential Data Elements and entering them into the State's Statewide Longitudinal Data System or other early learning data system, using these data to guide instruction and program improvement, and making this information readily available to families.

Screening Measures means age and developmentally appropriate, valid, and reliable instruments that are used to identify children who may need follow-up services to address developmental, learning, or health needs in, at a minimum, the areas of physical health, behavioral health, oral health, child development, vision, and hearing.

State means any of the 50 States, the District of Columbia, and Puerto Rico.

State Plan means the plan submitted as part of the State's RTT–ELC application.

Statewide Longitudinal Data System means the State's longitudinal education data system that collects and maintains detailed, high-quality, student- and staff-level data that are linked across entities and that over time provide a complete academic and performance history for each student. The Statewide Longitudinal Data System is typically housed within the State educational agency but includes or can be connected to early childhood, postsecondary, and labor data.

Tiered Quality Rating and Improvement System means the system through which the State uses a set of progressively higher Program Standards to evaluate the quality of an Early Learning and Development Program and to support program improvement. A Tiered Quality Rating and Improvement System consists of four components: (a) Tiered Program Standards with multiple rating categories that clearly and meaningfully differentiate program quality levels; (b) monitoring to evaluate program quality based on the Program Standards; (c) supports to help programs meet progressively higher standards

[8] National Research Council. (2008). *Early Childhood Assessment: Why, What, and How.* Committee on Developmental Outcomes and Assessments for Young Children, C.E. Snow and S.B. Van Hemel, Editors. Board on Children, Youth, and Families, Board on Testing and Assessment, Division of Behavioral and Social Sciences and Education. Washington, DC: The National Academies Press. *http://www.nap.edu/catalog.php?record_id=12446.*

(*e.g.,* through training, technical assistance, financial support); and (d) program quality ratings that are publically available; and includes a process for validating the system.

Workforce Knowledge and Competency Framework means a set of expectations that describes what Early Childhood Educators (including those working with children with disabilities and English learners) should know and be able to do. The Workforce Knowledge and Competency Framework, at a minimum, (a) is evidence-based; (b) incorporates knowledge and application of the State's Early Learning and Development Standards, the Comprehensive Assessment Systems, child development, health, and culturally and linguistically appropriate strategies for working with families; (c) includes knowledge of early mathematics and literacy development and effective instructional practices to support mathematics and literacy development in young children; (d) incorporates effective use of data to guide instruction and program improvement; (e) includes effective behavior management strategies that promote positive social emotional development and reduce challenging behaviors; and (f) incorporates feedback from experts at the State's postsecondary institutions and other early learning and development experts and Early Childhood Educators.

Waiver of Proposed Rulemaking: Under the Administrative Procedure Act, 5 U.S.C. 553, we generally offer interested parties the opportunity to comment on proposed priorities, requirements, definitions, and selection criteria. Section 437(d)(1) of GEPA, however, allows the Secretary of Education to exempt from rulemaking requirements governing the first grant competition under a new or substantially revised program authority. This is the first grant competition for the RTT–ELC grant program under the revised program authority in section 14006 of the ARRA, as amended by section 1832(b) of Division B of Public Law 112–10, the Department of Defense and Full-Year Continuing Appropriations Act, 2011. The Secretaries have decided to forgo public comment under the waiver authority in section 437(d)(1) of GEPA in order to ensure timely grant awards.

However, we have solicited public participation in two important ways as we developed an approach to conducting and implementing this competition. First, we invited the public to provide general input on the program from May 25 through June 30 on the ED.gov Blog. In response to this invitation, we received a total of 199 responses which we considered in our development of this notice. From July 1 to July 11, we posted on ED's Web site a draft Executive Summary of the competition, which included draft competition priorities, requirements, definitions, and selection criteria, and we invited public input on each of these elements of the competition. In response to this invitation, we received 349 responses that reflected the viewpoints of a variety of individuals, and early childhood, health, and education organizations. Members of the public provided input on all sections of the draft selection criteria, priorities, requirements, and definitions sections of the draft executive summary.

These priorities, selection criteria, requirements, and definitions will apply to the FY 2011 grant competition and any subsequent year in which we make awards from the list of unfunded applicants from this competition.

Program Authority: Sections 14005 and 14006, Division A, of the American Recovery and Reinvestment Act of 2009, as amended by section 1832(b) of Division B of Public Law 112–10, the Department of Defense and Full Year Continuing Appropriations Act, 2011.

Applicable Regulations: The Education Department General Administrative Regulations (EDGAR) in 34 CFR parts 75, 77, 79, 80, 82, 84, 85, 86, 97, 98, and 99.

II. Award Information

Type of Award: Discretionary grants.

Estimated Available Funds: $500 million. Contingent upon the availability of funds and the quality of applications, we may make additional awards in FY 2012 from the list of unfunded applicants from this competition.

Estimated Range of Awards: $50 million–$100 million.

Note: The Departments are not bound by any estimates in this notice.

Project Period: Up to 48 months.

Budget Requirements: To support States in planning their budgets, the Departments have developed the following budget caps for each State. The Secretaries will not consider for funding an application from a State that proposes a budget that exceeds the applicable cap set for that State. The Departments developed the following categories by ranking every State according to its share of the national population of children ages birth through five years old from Low-Income families and identifying the natural breaks in the rank order. Then, based on population, budget caps were developed for each category.[9]

Category 1—Up to $100 million—California, Florida, New York, Texas.

Category 2—Up to $70 million—Arizona, Georgia, Illinois, Michigan, North Carolina, Ohio, Pennsylvania.

Category 3—Up to $60 million—Alabama, Colorado, Indiana, Kentucky, Louisiana, Missouri, New Jersey, Oklahoma, Puerto Rico, South Carolina, Tennessee, Virginia, Washington, Wisconsin.

Category 4—Up to $50 million—Alaska, Arkansas, Connecticut, Delaware, District of Columbia, Hawaii, Idaho, Iowa, Kansas, Maine, Maryland, Massachusetts, Minnesota, Mississippi, Montana, Nebraska, New Hampshire, New Mexico, Nevada, North Dakota, Oregon, Rhode Island, South Dakota, Utah, Vermont, West Virginia, Wyoming.

In addition to considering other relevant factors (see 34 CFR 75.217(d)(3)), the selection of grantees may consider the need to ensure that early learning and development systems are developed in States with large, high-poverty, rural communities (including States with high percentages of high-poverty populations in rural areas and States with high absolute numbers of high-poverty individuals in rural areas). Awards may be granted to high-quality applications out of rank order to meet this need. ED may use any unused funds designated for this competition to make awards in Phase 3 of the Race to the Top Program.

The State must include in its budget the amount of funds it intends to distribute through Memoranda Of Understanding (MOUs), interagency agreements, contracts, or other mechanisms authorized by State procurement laws, to localities, Early Learning Intermediary Organizations, Participating Programs, or other partners.

The State must set aside $400,000 from its grant funds for the purpose of participating in RTT–ELC grantee technical assistance activities facilitated by ED or HHS.

III. Eligibility Information

1. *Eligible Applicants:* States that meet the following requirements:

(a) The Lead Agency must have executed with each Participating State Agency an MOU or other binding agreement that the State must attach to its application, describing the Participating State Agency's level of

[9] *Source:* U.S. Department of Commerce, Census Bureau, 2009. American Community Survey (ACS) 1-year Public Use Microdata Sample (PUMS) data.

participation in the grant. (See Appendix C of this notice.) At a minimum, the MOU or other binding agreement must include an assurance that the Participating State Agency agrees to use, to the extent applicable—

(1) A set of statewide Early Learning and Development Standards;

(2) A set of statewide Program Standards;

(3) A statewide Tiered Quality Rating and Improvement System; and

(4) A statewide Workforce Knowledge and Competency Framework and progression of credentials.

(b) The State must have an operational State Advisory Council on Early Care and Education that meets the requirements described in section 642B(b) of the Head Start Act (42 U.S.C. 9837b).

(c) The State must have submitted in FY 2010 an updated MIECHV State plan and FY 2011 Application for formula funding under the Maternal, Infant, and Early Childhood Home Visiting program (see section 511 of Title V of the Social Security Act, as added by section 2951 of the Affordable Care Act of 2010 (Pub. L. 111–148)).

2. *Cost Sharing or Matching:* This program does not require cost sharing or matching.

IV. Application and Submission Information

1. *Address to Request Application Package:*

You can obtain an application package via the Internet or from the Education Publications Center (ED Pubs). To obtain a copy via the Internet, use the following address: *http://www.ed.gov/programs/racetothetop-earlylearningchallenge.* To obtain a copy from ED Pubs, write, fax, or call the following: Education Publications Center, P.O. Box 1398, Jessup, MD 20794–1398. Telephone, toll free: 1–877–433–7827. FAX: (301) 470–1244. If you use a telecommunications device for the deaf (TDD), call, toll free: 1–877–576–7734.

You can also contact ED Pubs at its Web site: *http://www.ed.gov/pubs/edpubs.html* or at its e-mail address: *edpubs@inet.ed.gov.*

If you request an application from ED Pubs, be sure to identify this program or competition as follows: CFDA 84.412.

Individuals with disabilities can obtain a copy of the application package in an accessible format (*e.g.,* braille, large print, audiotape, or compact disc) by contacting the person listed under **FOR FURTHER INFORMATION CONTACT** in section VII of this notice.

2. *Content and Form of Application Submission:* Requirements concerning the content of the application, together with the forms a State must submit, are in the application package for this competition.

Page Limit: The application narrative (section VI of the application) is where the applicant addresses the selection criteria that reviewers will use to evaluate applications. We recommend that the applicant limit its narrative responses in section VI of the application to no more than 150 pages and limit its appendices to no more than 150 pages. The Secretaries strongly requests that applicants follow the recommended page limits, although the Secretaries will consider applications of greater length.

The following standards are recommended:

- A ''page'' is 8.5″ x 11″, on one side only, with 1″ margins at the top, bottom, and both sides.
- Each page is numbered.
- Line spacing is set to 1.5 spacing, and the font used is 12 point Times New Roman.

3. *Submission Dates and Times:*

Applications Available: August 26, 2011.

Dates of Meetings for Potential Applicants: September 1, 2011; September 13, 2011. To assist States in preparing the application and to respond to questions, ED and HHS intend to host a Webinar with potential applicants on September 1, 2011, to review the requirements, selection criteria, and priorities for this competition. The Departments also plan to host a Technical Assistance Planning Workshop for potential applicants on September 13, 2011, in Washington, DC. To minimize travel burdens associated with this workshop and to maximize the number of potential applicants who can participate, the Departments will also broadcast this workshop live at several other regional offices of the Departments across the country. The purpose of the workshop will be to allow teams of participants responsible for developing the State's application to review with Federal program staff the priorities, requirements, and selection criteria for this competition and to ask questions about the RTT–ELC competition. We strongly encourage all interested State applicants to participate in the workshop, either in Washington, DC, or at one of the regional offices. For those who cannot attend the workshop in person, a video recording of the workshop will be available on the RTT–ELC Web site at *http://www.ed.gov/programs/racetothetop-earlylearningchallenge.* The Departments may host additional conference calls, workshops, or Webinars to answer applicant questions and will be posting Frequently Asked Questions (FAQs) and responses on the RTT–ELC Web site. The Departments will make available all registration information and additional details for the September 1, 2011, Webinar; the September 13, 2011, workshop; and any other technical assistance events on the RTT–ELC Web site at *http://www.ed.gov/programs/racetothetop-earlylearningchallenge.*

Deadline for Transmittal of Applications: October 19, 2011.

Applications for grants under this competition must be submitted in electronic format on a CD or DVD, by mail or hand delivery. For information (including dates and times) about how to submit your application by mail or hand delivery, please refer to section IV (7) *Other Submission Requirements* of this notice. We will not consider an application that does not comply with the deadline requirements.

We will provide Congress with the names of the States that have submitted applications, as well as post the names of these States on the ED's Web site. We will also post all applications submitted by the States. Therefore, please ensure that your application does not include personally identifiable information, proprietary information, and other non-public information.

Individuals with disabilities who need an accommodation or auxiliary aid in connection with the application process should contact the person listed under **FOR FURTHER INFORMATION CONTACT** in section VII of this notice. If the Departments provide an accommodation or auxiliary aid to an individual with a disability in connection with the application process, the individual's application remains subject to all other requirements and limitations in this notice.

Deadline for Intergovernmental Review: December 19, 2011.

4. *Intergovernmental Review:* This program is subject to Executive Order 12372 and the regulations in 34 CFR part 79. Information about Intergovernmental Review of Federal Programs under Executive Order 12372 is in the application package for this competition.

5. *Funding Restrictions:* We specify unallowable costs in section (b) of *Program Requirements* in this notice. We reference additional regulations outlining funding restrictions in the *Applicable Regulations* section of this notice.

6. *Data Universal Numbering System Number, Taxpayer Identification Number, and Central Contractor*

Registry: To do business with the Departments, you must—

a. Have a Data Universal Numbering System (DUNS) number and a Taxpayer Identification Number (TIN);

b. Register both your DUNS number and TIN with the Central Contractor Registry (CCR), the Government's primary registrant database;

c. Provide your DUNS number and TIN on your application; and

d. Maintain an active CCR registration with current information while your application is under review by the Departments and, if you are awarded a grant, during the project period.

You can obtain a DUNS number from Dun and Bradstreet. A DUNS number can be created within one business day.

The CCR registration process may take five or more business days to complete. If you are currently registered with the CCR, you may not need to make any changes. However, please make certain that the TIN associated with your DUNS number is correct. Also note that you will need to update your CCR registration on an annual basis. This may take three or more business days to complete.

7. *Other Submission Requirements:* Applications for grants under this competition must be submitted by mail or hand delivery. We strongly recommend the use of overnight mail. Applications postmarked on the deadline date but arriving late will not be read.

a. *Application Submission Format and Deadline.*

Applications for grants under this competition must be submitted in electronic format on a CD or DVD, with CD–ROM or DVD–ROM preferred. In addition, applicants must submit a signed paper original of section IV of the application and one copy of that signed original. Autopen, copies, .PDFs (Adobe Portable Document Format), and faxed copies of signature pages are not acceptable originals. Section IV of the application includes the Application Assurances and Certifications.

We strongly request the applicant to submit a CD or DVD of its application that includes the following files:

1. A single file that contains the body of the application, including required budget tables, that has been converted into a .PDF (Portable Document) format so that the .PDF is searchable. Note that a .PDF created from a scanned document will not be searchable.

2. A single file in a .PDF format that contains all of the required signature pages. The signature pages may be scanned and turned into a PDF.

3. Copies of the completed electronic budget spreadsheets with the required budget tables, which should be in a separate file from the body of the application. The spreadsheets will not be reviewed by peer reviewers but will be used by the Departments for budget reviews.

Each of these items must be clearly labeled with the State's name and any other relevant identifying information. States must not password-protect these files.

We must receive all grant applications by 4:30:00 p.m., Washington, DC time, on the application deadline date. We will not accept an application for this competition after 4:30:00 p.m., Washington, DC time, on the application deadline date. Therefore, we strongly recommend that applicants arrange for mailing or hand delivery of their application in advance of the application deadline date.

b. *Submission of Applications by Mail.* States choosing to submit their application (*i.e.,* the CD or DVD, the signed paper original of section IV of the application, and the copy of that original) by mail (either through the U.S. Postal Service or a commercial carrier) should use the following mailing address: U.S. Department of Education, Application Control Center, Attention: (CFDA Number 84.412), LBJ Basement Level 1, 400 Maryland Avenue, SW., Washington, DC 20202–4260.

We must *receive* applications on or before the application deadline date. Therefore, to avoid delays, we strongly recommend sending applications via overnight mail. If we receive an application after the application deadline, we will not consider that application.

c. *Submission of Applications by Hand Delivery.*

States choosing to submit their application (*i.e.,* the CD or DVD, the signed paper original of section IV of the application, and the copy of that original) by hand delivery (including via a courier service) should use the following address: U.S. Department of Education, Application Control Center, Attention: (CFDA Number 84.412), 550 12th Street, SW., Room 7041, Potomac Center Plaza, Washington, DC 20202–4260.

The Application Control Center accepts hand deliveries daily between 8:00 a.m. and 4:30:00 p.m., Washington, DC time, except Saturdays, Sundays, and Federal holidays. If we receive an application after the application deadline, we will not consider that application.

d. *Envelope requirements and receipt:* When an applicant submits its application, whether by mail or hand delivery—

(1) It must indicate on the envelope that the CFDA number of the competition under which it is submitting its application is 84.412; and

(2) The Application Control Center will mail to the applicant a notification of receipt of the grant application. If the applicant does not receive this notification, it should call the Application Control Center at (202) 245–6288.

In accordance with 34 CFR 75.216(b) and (c), an application will not be evaluated for funding if the applicant does not comply with all of the procedural rules that govern the submission of the application or the application does not contain the information required under the program.

V. Application Review Information

1. Selection Criteria: We will use the following selection criteria to evaluate applications submitted under the RTT–ELC competition. The maximum score for all the selection criteria and competitive preference priorities is 300 points. The maximum score for each selection criterion is indicated in parentheses. The reviewers will utilize the scoring rubric located in Appendix B of this notice when evaluating the following selection criteria:

Core Areas—Sections (A) (Successful State Systems) and (B) (High-Quality, Accountable Programs)

States must address in their application all of the selection criteria in the Core Areas.

A. Successful State Systems

(A)(1) Demonstrating past commitment to early learning and development. (20 points)

The extent to which the State has demonstrated past commitment to and investment in high-quality, accessible Early Learning and Development Programs and services for Children with High Needs, as evidenced by the State's—

(a) Financial investment, from January 2007 to the present, in Early Learning and Development Programs, including the amount of these investments in relation to the size of the State's population of Children with High Needs during this time period;

(b) Increasing, from January 2007 to the present, the number of Children with High Needs participating in Early Learning and Development Programs;

(c) Existing early learning and development legislation, policies, or practices; and

(d) Current status in key areas that form the building blocks for a high quality early learning and development system, including Early Learning and Development Standards, Comprehensive Assessment Systems, health promotion practices, family engagement strategies, the development of Early Childhood Educators, Kindergarten Entry Assessments, and effective data practices.

(A)(2) Articulating the State's rationale for its early learning and development reform agenda and goals. (20 points)

The extent to which the State clearly articulates a comprehensive early learning and development reform agenda that is ambitious yet achievable, builds on the State's progress to date (as demonstrated in selection criterion (A)(1)), is most likely to result in improved school readiness for Children with High Needs, and includes—

(a) Ambitious yet achievable goals for improving program quality, improving outcomes for Children with High Needs statewide, and closing the readiness gap between Children with High Needs and their peers;

(b) An overall summary of the State Plan that clearly articulates how the High-Quality Plans proposed under each selection criterion, when taken together, constitute an effective reform agenda that establishes a clear and credible path toward achieving these goals; and

(c) A specific rationale that justifies the State's choice to address the selected criteria in each Focused Investment Area (C), (D), and (E), including why these selected criteria will best achieve these goals.

(A)(3) Aligning and coordinating early learning and development across the State. (10 points)

The extent to which the State has established, or has a High-Quality Plan to establish, strong participation and commitment in the State Plan by Participating State Agencies and other early learning and development stakeholders by—

(a) Demonstrating how the Participating State Agencies and other partners, if any, will identify a governance structure for working together that will facilitate interagency coordination, streamline decision making, effectively allocate resources, and create long-term sustainability and describing—

(1) The organizational structure for managing the grant and how it builds upon existing interagency governance structures such as children's cabinets, councils, and commissions, if any already exist and are effective;

(2) The governance-related roles and responsibilities of the Lead Agency, the State Advisory Council, each Participating State Agency, the State's Interagency Coordinating Council for part C of IDEA, and other partners, if any;

(3) The method and process for making different types of decisions (*e.g.,* policy, operational) and resolving disputes; and

(4) The plan for when and how the State will involve representatives from Participating Programs, Early Childhood Educators or their representatives, parents and families, including parents and families of Children with High Needs, and other key stakeholders in the planning and implementation of the activities carried out under the grant;

(b) Demonstrating that the Participating State Agencies are strongly committed to the State Plan, to the governance structure of the grant, and to effective implementation of the State Plan, by including in the MOUs or other binding agreements between the State and each Participating State Agency—

(1) Terms and conditions that reflect a strong commitment to the State Plan by each Participating State Agency, including terms and conditions designed to align and leverage the Participating State Agencies' existing funding to support the State Plan;

(2) ''Scope-of-work'' descriptions that require each Participating State Agency to implement all applicable portions of the State Plan and a description of efforts to maximize the number of Early Learning and Development Programs that become Participating Programs; and

(3) A signature from an authorized representative of each Participating State Agency; and

(c) Demonstrating commitment to the State Plan from a broad group of stakeholders that will assist the State in reaching the ambitious yet achievable goals outlined in response to selection criterion (A)(2)(a), including by obtaining—

(1) Detailed and persuasive letters of intent or support from Early Learning Intermediary Organizations, and, if applicable, local early learning councils; and

(2) Letters of intent or support from such other stakeholders as Early Childhood Educators or their representatives; the State's legislators; local community leaders; State or local school boards; representatives of private and faith-based early learning programs; other State and local leaders (*e.g.,* business, community, tribal, civil rights, education association leaders); adult education and family literacy State and local leaders; family and community organizations (*e.g.,* parent councils, nonprofit organizations, local foundations, tribal organizations, and community-based organizations); libraries and children's museums; health providers; and postsecondary institutions.

(A)(4) Developing a budget to implement and sustain the work of this grant. (15 points)

The extent to which the State Plan—

(a) Demonstrates how the State will use existing funds that support early learning and development from Federal, State, private, and local sources (*e.g.,* CCDF; Title I and II of ESEA; IDEA; Striving Readers Comprehensive Literacy Program; State preschool; Head Start Collaboration and State Advisory Council funding; Maternal, Infant, and Early Childhood Home Visiting Program; Title V MCH Block Grant; TANF; Medicaid; child welfare services under Title IV (B) and (E) of the Social Security Act; Statewide Longitudinal Data System; foundation; other private funding sources) for activities and services that help achieve the outcomes in the State Plan, including how the quality set-asides in CCDF will be used;

(b) Describes, in both the budget tables and budget narratives, how the State will effectively and efficiently use funding from this grant to achieve the outcomes in the State Plan, in a manner that—

(1) Is adequate to support the activities described in the State Plan;

(2) Includes costs that are reasonable and necessary in relation to the objectives, design, and significance of the activities described in the State Plan and the number of children to be served; and

(3) Details the amount of funds budgeted for Participating State Agencies, localities, Early Learning Intermediary Organizations, Participating Programs, or other partners, and the specific activities to be implemented with these funds consistent with the State Plan, and demonstrates that a significant amount of funding will be devoted to the local implementation of the State Plan; and

(c) Demonstrates that it can be sustained after the grant period ends to ensure that the number and percentage of Children with High Needs served by Early Learning and Development Programs in the State will be maintained or expanded.

B. High-Quality, Accountable Programs

(B)(1) Developing and adopting a common, statewide Tiered Quality Rating and Improvement System. (10 points)

The extent to which the State and its Participating State Agencies have developed and adopted, or have a High-Quality Plan to develop and adopt, a Tiered Quality Rating and Improvement System that—

(a) Is based on a statewide set of tiered Program Standards that include—

(1) Early Learning and Development Standards;

(2) A Comprehensive Assessment System;

(3) Early Childhood Educator qualifications;

(4) Family engagement strategies;

(5) Health promotion practices; and

(6) Effective data practices;

(b) Is clear and has standards that are measurable, meaningfully differentiate program quality levels, and reflect high expectations of program excellence commensurate with nationally recognized standards [10] that lead to improved learning outcomes for children; and

(c) Is linked to the State licensing system for Early Learning and Development Programs.

(B)(2) Promoting Participation in the State's Tiered Quality Rating and Improvement System. (15 points)

The extent to which the State has maximized, or has a High-Quality Plan to maximize, program participation in the State's Tiered Quality Rating and Improvement System by—

(a) Implementing effective policies and practices to reach the goal of having all publicly funded Early Learning and Development Programs participate in such a system, including programs in each of the following categories—

(1) State-funded preschool programs;

(2) Early Head Start and Head Start programs;

(3) Early Learning and Development Programs funded under section 619 of part B of IDEA and part C of IDEA;

(4) Early Learning and Development Programs funded under Title I of the ESEA; and

(5) Early Learning and Development Programs receiving funds from the State's CCDF program;

(b) Implementing effective policies and practices designed to help more families afford high-quality child care and maintain the supply of high-quality child care in areas with high concentrations of Children with High Needs (*e.g.,* maintaining or increasing subsidy reimbursement rates, taking actions to ensure affordable co-payments, providing incentives to high-quality providers to participate in the subsidy program); and

(c) Setting ambitious yet achievable targets for the numbers and percentages of Early Learning and Development Programs that will participate in the Tiered Quality Rating and Improvement System by type of Early Learning and Development Program (as listed in (B)(2)(a)(1) through (5) above).

(B)(3) Rating and monitoring Early Learning and Development Programs. (15 points)

The extent to which the State and its Participating State Agencies have developed and implemented, or have a High-Quality Plan to develop and implement, a system for rating and monitoring the quality of Early Learning and Development Programs participating in the Tiered Quality Rating and Improvement System by—

(a) Using a valid and reliable tool for monitoring such programs, having trained monitors whose ratings have an acceptable level of inter-rater reliability, and monitoring and rating the Early Learning and Development Programs with appropriate frequency; and

(b) Providing quality rating and licensing information to parents with children enrolled in Early Learning and Development Programs (*e.g.,* displaying quality rating information at the program site) and making program quality rating data, information, and licensing history (including any health and safety violations) publicly available in formats that are easy to understand and use for decision making by families selecting Early Learning and Development Programs and families whose children are enrolled in such programs.

(B)(4) Promoting access to high-quality Early Learning and Development Programs for Children with High Needs. (20 points)

The extent to which the State and its Participating State Agencies have developed and implemented, or have a High-Quality Plan to develop and implement, a system for improving the quality of the Early Learning and Development Programs participating in the Tiered Quality Rating and Improvement System by—

(a) Developing and implementing policies and practices that provide support and incentives for Early Learning and Development Programs to continuously improve (*e.g.,* through training, technical assistance, financial rewards or incentives, higher subsidy reimbursement rates, compensation);

(b) Providing supports to help working families who have Children with High Needs access high-quality Early Learning and Development Programs that meet those needs (*e.g.,* providing full-day, full-year programs; transportation; meals; family support services); and

(c) Setting ambitious yet achievable targets for increasing—

(1) The number of Early Learning and Development Programs in the top tiers of the Tiered Quality Rating and Improvement System; and

(2) The number and percentage of Children with High Needs who are enrolled in Early Learning and Development Programs that are in the top tiers of the Tiered Quality Rating and Improvement System.

(B)(5) Validating the effectiveness of State Tiered Quality Rating and Improvement Systems. (15 points)

The extent to which the State has a High-Quality Plan to design and implement evaluations—working with an independent evaluator and, when warranted, as part of a cross-State evaluation consortium—of the relationship between the ratings generated by the State's Tiered Quality Rating and Improvement System and the learning outcomes of children served by the State's Early Learning and Development Programs by—

(a) Validating, using research-based measures, as described in the State Plan (which also describes the criteria that the State used or will use to determine those measures), whether the tiers in the State's Tiered Quality Rating and Improvement System accurately reflect differential levels of program quality; and

(b) Assessing, using appropriate research designs and measures of progress (as identified in the State Plan), the extent to which changes in quality ratings are related to progress in children's learning, development, and school readiness.

[10] See such nationally recognized standards as:

U.S. Department of Health and Human Services. (2009). *Head Start Program Performance Standards.* Washington, DC: U.S. Department of Health and Human Services. PDF retrieved from: 45 CFR Chapter XIII—1301–1311 *http://eclkc.ohs.acf.hhs.gov/hslc/Head%20Start%20Program/Program%20Design%20and%20Management/Head%20Start%20Requirements/Head%20Start%20Requirements/45%20CFR%20Chapter%20XIII/45%20CFR%20Chap%20XIII_ENG.pdf.*

U.S. Department of Defense. DoD Instruction 6060.2, *Child Development Programs (CDPs),* January 19, 1993, certified as current August 25, 1998 (to be updated Fall 2011). Washington, DC: U.S. Department of Defense. Retrieved from: *http://www.militaryhomefront.dod.mil/portal/page/mhf/MHF/MHF_DETAIL_1?section_id=20.60.500.100.0.0.0.0.0&current_id=20.60.500.100.500.60.60.0.0.*

American Academy of Pediatrics, American Public Health association, and National Resource Center for Health and Safety in Child Care and Early Education. (2011) *Caring for Our Children: National Health and Safety Performance Standards; Guidelines for Early Care and education Programs.* Elk Grove Village, IL; American Academy of Pediatrics.

Focused Investment Areas—Sections (C), (D), and (E)

Each State must address in its application—

(1) Two or more of the selection criteria in Focused Investment Area (C);

(2) One or more of the selection criteria in Focused Investment Area (D); and

(3) One or more of the selection criteria in Focused Investment Area (E).

The total available points for each Focused Investment Area will be divided by the number of selection criteria that the applicant chooses to address in that area, so that each selection criterion is worth the same number of points.

C. Promoting Early Learning and Development Outcomes for Children

The total available points that an applicant may receive for selection criteria (C)(1) through (C)(4) is 60. The 60 points will be divided by the number of selection criteria that the applicant chooses to address so that each selection criterion is worth the same number of points. For example, if the applicant chooses to address all four selection criteria under this Focused Investment Area, each criterion will be worth up to 15 points. If the applicant chooses to address two selection criteria, each criterion will be worth up to 30 points.

The applicant must address at least two of the selection criteria within Focused Investment Area (C), which are as follows:

(C)(1) Developing and using statewide, high-quality Early Learning and Development Standards.

The extent to which the State has a High-Quality Plan to put in place high-quality Early Learning and Development Standards that are used statewide by Early Learning and Development Programs and that—

(a) Includes evidence that the Early Learning and Development Standards are developmentally, culturally, and linguistically appropriate across each age group of infants, toddlers, and preschoolers, and that they cover all Essential Domains of School Readiness;

(b) Includes evidence that the Early Learning and Development Standards are aligned with the State's K–3 academic standards in, at a minimum, early literacy and mathematics;

(c) Includes evidence that the Early Learning and Development Standards are incorporated in Program Standards, curricula and activities, Comprehensive Assessment Systems, the State's Workforce Knowledge and Competency Framework, and professional development activities; and

(d) The State has supports in place to promote understanding of and commitment to the Early Learning and Development Standards across Early Learning and Development Programs.

(C)(2) Supporting effective uses of Comprehensive Assessment Systems.

The extent to which the State has a High-Quality Plan to support the effective implementation of developmentally appropriate Comprehensive Assessment Systems by—

(a) Working with Early Learning and Development Programs to select assessment instruments and approaches that are appropriate for the target populations and purposes;

(b) Working with Early Learning and Development Programs to strengthen Early Childhood Educators' understanding of the purposes and uses of each type of assessment included in the Comprehensive Assessment Systems;

(c) Articulating an approach for aligning and integrating assessments and sharing assessment results, as appropriate, in order to avoid duplication of assessments and to coordinate services for Children with High Needs who are served by multiple Early Learning and Development Programs; and

(d) Training Early Childhood Educators to appropriately administer assessments and interpret and use assessment data in order to inform and improve instruction, programs, and services.

(C)(3) Identifying and addressing the health, behavioral, and developmental needs of Children with High Needs to improve school readiness.

The extent to which the State has a High-Quality Plan to identify and address the health, behavioral, and developmental needs of Children with High Needs by—

(a) Establishing a progression of standards for ensuring children's health and safety; ensuring that health and behavioral screening and follow-up occur; and promoting children's physical, social, and emotional development across the levels of its Program Standards;

(b) Increasing the number of Early Childhood Educators who are trained and supported on an on-going basis in meeting the health standards;

(c) Promoting healthy eating habits, improving nutrition, expanding physical activity; and

(d) Leveraging existing resources to meet ambitious yet achievable annual targets to increase the number of Children with High Needs who—

(1) Are screened using Screening Measures that align with the Medicaid Early Periodic Screening, Diagnostic and Treatment benefit (see section 1905(r)(5) of the Social Security Act) or the well-baby and well-child services available through the Children's Health Insurance Program (42 CFR 457.520), and that, as appropriate, are consistent with the Child Find provisions in IDEA (see sections 612(a)(3) and 635(a)(5) of IDEA);

(2) Are referred for services based on the results of those screenings, and, where appropriate, received follow-up; and

(3) Participate in ongoing health care as part of a schedule of well-child care, including the number of children who are up to date in a schedule of well-child care.

(C)(4) Engaging and supporting families.

The extent to which the State has a High-Quality Plan to provide culturally and linguistically appropriate information and support to families of Children with High Needs in order to promote school readiness for their children by—

(a) Establishing a progression of culturally and linguistically appropriate standards for family engagement across the levels of its Program Standards, including activities that enhance the capacity of families to support their children's education and development;

(b) Increasing the number and percentage of Early Childhood Educators trained and supported on an on-going basis to implement the family engagement strategies included in the Program Standards; and

(c) Promoting family support and engagement statewide, including by leveraging other existing resources such as through home visiting programs, other family-serving agencies, and through outreach to family, friend, and neighbor caregivers.

D. A Great Early Childhood Education Workforce

The total available points that a State may receive for selection criteria (D)(1) and (D)(2) is 40. The 40 points will be divided by the number of selection criteria that the applicant chooses to address so that each selection criterion is worth the same number of points. For example, if the applicant chooses to address both selection criteria under this Focused Investment Area, each criterion will be worth up to 20 points. If the applicant chooses to address one selection criterion, the criterion will be worth up to 40 points.

The applicant must address at least one of the selection criteria within

Focused Investment Area (D), which are as follows:

(D)(1) Developing a Workforce Knowledge and Competency Framework and a progression of credentials.

The extent to which the State has a High-Quality Plan to—

(a) Develop a common, statewide Workforce Knowledge and Competency Framework designed to promote children's learning and development and improve child outcomes;

(b) Develop a common, statewide progression of credentials and degrees aligned with the Workforce Knowledge and Competency Framework; and

(c) Engage postsecondary institutions and other professional development providers in aligning professional development opportunities with the State's Workforce Knowledge and Competency Framework.

(D)(2) Supporting Early Childhood Educators in improving their knowledge, skills, and abilities.

The extent to which the State has a High-Quality Plan to improve the effectiveness and retention of Early Childhood Educators who work with Children with High Needs, with the goal of improving child outcomes by—

(a) Providing and expanding access to effective professional development opportunities that are aligned with the State's Workforce Knowledge and Competency Framework;

(b) Implementing policies and incentives (*e.g.*, scholarships, compensation and wage supplements, tiered reimbursement rates, other financial incentives, management opportunities) that promote professional improvement and career advancement along an articulated career pathway that is aligned with the Workforce Knowledge and Competency Framework, and that are designed to increase retention;

(c) Publicly reporting aggregated data on Early Childhood Educator development, advancement, and retention; and

(d) Setting ambitious yet achievable targets for—

(1) Increasing the number of postsecondary institutions and professional development providers with programs that are aligned to the Workforce Knowledge and Competency Framework and the number of Early Childhood Educators who receive credentials from postsecondary institutions and professional development providers that are aligned to the Workforce Knowledge and Competency Framework; and

(2) Increasing the number and percentage of Early Childhood Educators who are progressing to higher levels of credentials that align with the Workforce Knowledge and Competency Framework.

E. Measuring Outcomes and Progress

The total available points an applicant may receive for selection criteria (E)(1) and (E)(2) is 40. The 40 points will be divided by the number of selection criteria that the applicant chooses to address so that each selection criterion is worth the same number of points. For example, if the applicant chooses to address both selection criteria under this Focused Investment Area, each criterion will be worth up to 20 points. If the applicant chooses to address one selection criterion, the criterion will be worth up to 40 points.

The applicant must address at least one of the selection criteria within Focused Investment Area (E), which are as follows:

(E)(1) Understanding the status of children's learning and development at kindergarten entry.

The extent to which the State has a High-Quality Plan to implement, independently or as part of a cross-State consortium, a common, statewide Kindergarten Entry Assessment that informs instruction and services in the early elementary grades and that—

(a) Is aligned with the State's Early Learning and Development Standards and covers all Essential Domains of School Readiness;

(b) Is valid, reliable, and appropriate for the target population and for the purpose for which it will be used, including for English learners and children with disabilities;

(c) Is administered beginning no later than the start of school year 2014–2015 to children entering a public school kindergarten; States may propose a phased implementation plan that forms the basis for broader statewide implementation;

(d) Is reported to the Statewide Longitudinal Data System, and to the early learning data system, if it is separate from the Statewide Longitudinal Data System, as permitted under and consistent with the requirements of Federal, State, and local privacy laws; and

(e) Is funded, in significant part, with Federal or State resources other than those available under this grant, (*e.g.*, with funds available under section 6111 or 6112 of the ESEA).

(E)(2) Building or enhancing an early learning data system to improve instruction, practices, services, and policies.

The extent to which the State has a High-Quality Plan to enhance the State's existing Statewide Longitudinal Data System or to build or enhance a separate, coordinated, early learning data system that aligns and is interoperable with the Statewide Longitudinal Data System, and that either data system—

(a) Has all of the Essential Data Elements;

(b) Enables uniform data collection and easy entry of the Essential Data Elements by Participating State Agencies and Participating Programs;

(c) Facilitates the exchange of data among Participating State Agencies by using standard data structures, data formats, and data definitions such as Common Education Data Standards to ensure interoperability among the various levels and types of data;

(d) Generates information that is timely, relevant, accessible, and easy for Early Learning and Development Programs and Early Childhood Educators to use for continuous improvement and decision making; and

(e) Meets the Data System Oversight Requirements and complies with the requirements of Federal, State, and local privacy laws.

2. *Review and Selection Process:*

The Departments will screen applications that are received by the deadline listed in this notice and will determine which States are eligible based on whether they have met the eligibility requirements in paragraphs (1)(a), (1)(b), and (1)(c) of section III (*Eligibility Information*) of this notice; the Departments will not consider further those applicants deemed ineligible under eligibility requirements in paragraphs (1)(a), (1)(b), and (1)(c) of that section.

The Departments intend to use a peer review process with panels of five reviewers per application. Review panels will be created based on the number of applications received (*e.g.*, if 35 applications are received, reviewers will be sorted into 35 different panels).

After the review process is complete, the selection of grantees will take into account, consistent with 34 CFR 75.217, the rank order of applications, each applicant's status with respect to the Absolute Priority and the eligibility requirements (1)(a), (1)(b), and (1)(c) of section III (*Eligibility Information*) of this notice; and any other relevant information. In addition, consistent with 34 CFR 75.217(d)(3), we remind potential applicants the evaluation of applications may consider the applicant's past performance in carrying out a previous reward, such as the applicant's use of funds, achievement of project objectives, and compliance with grant conditions, as well as the applicant's prior record in submitting

timely and adequate performance reports. All applicants will receive their reviewers' comments and scores.

In addition, in making a competitive grant award, various assurances are required from grantees, including those applicable to Federal civil rights laws that prohibit discrimination in programs or activities receiving Federal financial assistance from the Department of Education (34 CFR 100.4, 104.5, 106.4, 108.8, and 110.23).

In addition to considering other relevant factors (see 34 CFR 75.217(d)(3)), the selection of grantees may consider the need to ensure that high-quality early learning and development systems are developed in States with large, high-poverty, rural communities (including States with high percentages of high-poverty populations in rural areas and States with high absolute numbers of high-poverty individuals in rural areas). Awards may be granted to high-quality applications out of rank order to meet this need.

We will post all submitted applications (both successful and unsuccessful) on ED's Web site, together with the final scores each application received. We will post each reviewer's final scores and comments on reviewed applications, with the names of reviewers redacted.

3. *Special Conditions:* Under 34 CFR 80.12, special conditions may be imposed on a grant if the grantee is not financially stable; has a history of unsatisfactory performance; has a financial or other management system that does not meet the standards in 34 CFR part 80, as applicable; has not fulfilled the conditions of a prior grant; or is otherwise not responsible.

VI. Award Administration Information

1. *Award Notices:* If an application is successful, ED will notify the State's U.S. Representatives and U.S. Senators and send the applicant a Grant Award Notification (GAN). We may notify the State informally, as well.

If an application is not evaluated or not selected for funding, ED will notify the State.

2. *Administrative and National Policy Requirements:* We identify administrative and national policy requirements in the application package and reference these and other requirements in the *Applicable Regulations* section of this notice.

We reference the regulations outlining the terms and conditions of an award in the *Applicable Regulations* section of this notice and include these and other specific conditions in the GAN. The GAN also incorporates the approved application as part of the binding commitments under the grant.

3. *Reporting:*

(a) Any State that applies for a grant under this competition must ensure that it has in place the necessary processes and systems to comply with the reporting requirements in 2 CFR part 170 should it receive funding under the competition. This does not apply if the State has an exception under 2 CFR 170.110(b).

(b) A State receiving funds under an RTT–ELC grant must submit an annual report that must include, in addition to the standard elements, a description of the State's progress to date on its goals, timelines, and budgets, as well as actual performance compared to the annual targets the State established in its application with respect to each performance measure. Further, a State receiving funds under this program is accountable for meeting the goals, timelines, budget, and annual targets established in the application; adhering to an annual fund drawdown schedule that is tied to meeting these goals, timelines, budget, and annual targets; and fulfilling and maintaining all other conditions for the conduct of the project. The Departments will monitor a State's progress in meeting the State's goals, timelines, budget, and annual targets and in fulfilling other applicable requirements. In addition, we may collect additional data as part of a State's annual reporting requirements.

To support a collaborative process with the State, we may require that applicants who are selected to receive an award enter into a written performance or cooperative agreement. If we determine that a State is not meeting its goals, timelines, budget, or annual targets or is not fulfilling other applicable requirements, we will take appropriate action, which could include establishing a collaborative process or taking enforcement measures with respect to this grant, such as placing the State in high-risk status, putting the State on reimbursement payment status, or delaying or withholding funds.

4. *Evidence and Performance Measures:* Appendix A to this notice lists the evidence and performance measures.

VII. Agency Contact

FOR FURTHER INFORMATION CONTACT: Meredith Farace, U.S. Department of Education, 400 Maryland Ave., SW., room 7E208, Washington, DC 20202–6400. Telephone: 202–453–6400 or by e-mail: *RTT.Early.Learning.Challenge@ed.gov.*

If a TDD is needed, call the Federal Relay Service, toll free, at 1–800–877–8339.

VIII. Other Information

Accessible Format: Individuals with disabilities can obtain this document in an accessible format (*e.g.,* braille, large print, audiotape, or compact disc) on request to the program contact person listed under **FOR FURTHER INFORMATION CONTACT**.

Electronic Access to This Document: The official version of this document is the document published in the **Federal Register**. Free Internet access to the official edition of the **Federal Register** and the Code of Federal Regulations is available via the Federal Digital System at: *http://www.gpo.gov/fdsys.* At this site you can view this document, as well as all other documents of these Departments published in the **Federal Register**, in text or Adobe Portable Document Format (PDF). To use PDF you must have Adobe Acrobat Reader, which is available free at the site.

You may also access documents of these Departments published in the **Federal Register** by using the article search feature at: *http://www.federalregister.gov.* Specifically, through the advanced search feature at this site, you can limit your search to documents published by the Department.

Dated: August 22, 2011.

Arne Duncan,

Secretary of Education.

Kathleen Sebelius,

Secretary of Health and Human Services.

Appendix A: Evidence and Performance Measures

Note: All tables referenced in this notice are included in the application package.

Core Areas—Sections (A) and (B)

A. Successful State Systems

(A)(1) Demonstrating past commitment to early learning and development

Evidence for (A)(1):

- The completed background data tables providing the State's baseline data for—
  - The number and percentage of children from Low-Income families in the State, by age (see Table (A)(1)–1 in the application);
  - The number and percentage of Children with High Needs from special populations in the State (see Table (A)(1)–2 in the application); and
  - The number of Children with High Needs in the State who are enrolled in Early Learning and Development Programs, by age (see Table (A)(1)–3 in the application).
- Data currently available, if any, on the status of children at kindergarten entry (across Essential Domains of School Readiness, if available), including data on the

readiness gap between Children with High Needs and their peers.

• Data currently available, if any, on program quality across different types of Early Learning and Development Programs.

• The completed table that shows the number of Children with High Needs participating in each type of Early Learning and Development Program for each of the past 5 years (2007–2011) (see Table (A)(1)–4 in the application).

• The completed table that shows the number of Children with High Needs participating in each type of Early Learning and Development Program for each of the past 5 years (2007–2011) (see Table (A)(1)–5 in the application).

• The completed table that describes the current status of the State's Early Learning and Development Standards, for each of the Essential Domains of School Readiness, by age group of infants, toddlers, and preschoolers (see Table (A)(1)–6 in the application).

• The completed table that describes the elements of a Comprehensive Assessment System currently required within the State by different types of Early Learning and Development Programs or systems (see Table (A)(1)–7 in the application).

• The completed table that describes the elements of high-quality health promotion practices currently required within the State by different types of Early Learning and Development Programs or systems (see Table (A)(1)–8 in the application).

• The completed table that describes the elements of a high-quality family engagement strategy currently required within the State by different types of Early Learning and Development Programs or systems (see Table (A)(1)–9 in the application).

• The completed table that describes all early learning and development workforce credentials currently available in the State, including whether credentials are aligned with a State Workforce Knowledge and Competency Framework and the number and percentage of Early Childhood Educators who have each type of credential (see Table (A)(1)–10 in the application).

• The completed table that describes the current status of postsecondary institutions and other professional development providers in the State that issue credentials or degrees to Early Childhood Educators (see Table (A)(1)–11 in the application).

• The completed table that describes the current status of the State's Kindergarten Entry Assessment (see Table (A)(1)–12 in the application).

• The completed table that describes all early learning and development data systems currently used in the State (see Table (A)(1)–13 in the application).

Performance Measures

• None required.

(A)(2) Articulating the State's rationale for its early learning and development reform agenda and goals.

Evidence

Evidence for (A)(2):

• The State's goals for improving program quality statewide over the period of this grant.

• The State's goals for improving child outcomes statewide over the period of this grant.

• The State's goals for closing the readiness gap between Children with High Needs and their peers at kindergarten entry.

• Identification of the two or more selection criteria that the State has chosen to address in Focused Investment Area (C).

• Identification of the one or more selection criteria that the State has chosen to address in Focused Investment Area (D).

• Identification of the one or more selection criteria that the State has chosen to address in Focused Investment Area (E).

• For each Focused Investment Area (C), (D), and (E), a description of the State's rationale for choosing to address the selected criteria in that Focused Investment Area, including how the State's choices build on its progress to date in each Focused Investment Area (as outlined in Tables (A)(1)6–13 and the narrative under (A)(1) in the application) and why these selected criteria will best achieve the State's ambitious yet achievable goals for improving program quality, improving outcomes for Children with High Needs statewide, and closing the readiness gap between Children with High Needs and their peers.

Performance Measures

• None required.

(A)(3) Aligning and coordinating early learning and development across the State.

Evidence

Evidence for (A)(3)(a) and (b):

• For (A)(3)(a)(1): An organizational chart that shows how the grant will be governed and managed.

• The completed table that lists governance-related roles and responsibilities (Table (A)(3)–1 in the application).

• A copy of all fully executed MOUs or other binding agreements that cover each Participating State Agency. (MOUs or other binding agreements should be referenced in the narrative but must be included in the Appendix to the application).

Evidence

Evidence for (A)(3)(c)(1):

• The completed table that includes a list of every Early Learning Intermediary Organization and local early learning council (if applicable) in the State and indicates which organizations and councils have submitted letters of intent or support (Table (A)(3)–2 in the application).

• A copy of every letter of intent or support from Early Learning Intermediary Organizations and local early learning councils. (Letters should be referenced in the narrative but must be included in the Appendix with a table.)

Evidence

Evidence for (A)(3)(c)(2):

• A copy of every letter of intent or support from other stakeholders. (Letters should be referenced in the narrative but must be included in the Appendix with a table.)

Performance Measures

• None required.

(A)(4) Developing a budget to implement and sustain the work of this grant.

Evidence

Evidence for (A)(4)(a):

• The completed table listing the existing funds to be used to achieve the outcomes in the State Plan (Table (A)(4)–1 in the application).

• Description of how these existing funds will be used for activities and services that help achieve the outcomes in the State Plan.

Evidence for (A)(4)(b):

• The State's budget (completed in section VIII of the application).

• The narratives that accompany and explain the budget, and describes how it connects to the State Plan (completed in section VIII of the application).

Performance Measures

• None required.

B. High-Quality, Accountable Programs

(B)(1) Developing and adopting a common, statewide Tiered Quality Rating and Improvement System.

Evidence

Evidence for (B)(1):

• The completed table that lists each set of existing Program Standards currently used in the State and the elements that are included in those Program Standards (Early Learning and Development Standards, Comprehensive Assessment Systems, Qualified Workforce, Family Engagement, Health Promotion, Effective Data Practices, and Other), (Table (B)(1)–1 in the application).

• To the extent the State has developed and adopted a Tiered Quality Rating and Improvement System based on a common set of tiered Program Standards that meet the elements in criterion (B)(1)(a), submit—

○ A copy of the tiered Program Standards;

○ Documentation that the Program Standards address all areas outlined in the definition of Program Standards, demonstrate high expectations of program excellence commensurate with nationally recognized standards, and are linked to the States licensing system;

○ Documentation of how the tiers meaningfully differentiate levels of quality.

Performance Measures

• None required.

(B)(2) Promoting Participation in the State's Tiered Quality Rating and Improvement System.

Evidence

• Any supporting evidence the State believes will be helpful to peer reviewers.

Performance Measures

Performance Measures for (B)(2)(c):

General goals to be provided at time of application, including baseline data and annual targets:

• Number and percentage of Early Learning and Development Programs participating in the statewide Tiered Quality Rating and Improvement System, by type of Early Learning and Development Program.

(B)(3) Rating and monitoring Early Learning and Development Programs.

Evidence

• Any supporting evidence the State believes will be helpful to peer reviewers

Performance Measures

• None required.

(B)(4) Promoting Access to High-Quality Early Learning and Development Programs for Children with High Needs.

Evidence

• Any supporting evidence the State believes will be helpful to peer reviewers.

Performance Measures

Performance Measures for (B)(4)(c):

General goals to be provided at time of application, including baseline data and annual targets:

• Number of Early Learning and Development Programs in the top tiers of the Tiered Quality Rating and Improvement System, by type of Early Learning and Development Program.

• Number and Percentage of Children with High Needs who are enrolled in Early Learning and Development Programs that that are in the top tiers of the Tiered Quality Rating and Improvement System, by type of Early Learning and Development Program.

(B)(5) Validating the effectiveness of the State Tiered Quality Rating and Improvement System.

Evidence

• Any supporting evidence the State believes will be helpful to peer reviewers.

Performance Measures

• None required.

Focused Investment Areas—Sections (C), (D), and (E)

C. Promoting Early Learning and Development Outcomes for Children

(C)(1) Developing and using statewide, high-quality Early Learning and Development Standards.

Evidence

Evidence for (C)(1)(a) and (b):

• To the extent the State has implemented Early Learning and Development Standards that meet the elements in criteria (C)(1)(a) and (b), submit—

○ Proof of use by all types of Early Learning and Development Programs in the State;

○ The State's Early Learning and Development Standards for:

—Infants and toddlers

—Preschoolers

○ Documentation that the standards are developmentally, linguistically and culturally appropriate for all children, including children with disabilities and developmental delays and English Learners;

○ Documentation that the standards address all Essential Domains of School Readiness and that they are of high-quality; and

○ Documentation of the alignment between the State's Early Learning and Development Standards and the State's K–3 standards.

Performance Measures

• None required.

(C)(2) Supporting effective uses of Comprehensive Assessment Systems.

Evidence

• Any supporting evidence the State believes will be helpful to peer reviewers.

Performance Measures

• None required.

(C)(3) Identifying and addressing the health, behavioral, and developmental needs of Children with High Needs to improve school readiness.

Evidence

Evidence for (C)(3)(a):

• To the extent the State has established a progression of health standards across the levels of Program Standards that meet the elements in criterion (C)(3)(a), submit—

○ The progression of health standards used in the Program Standards and the State's plans for improvement over time, including documentation demonstrating that this progression of standards appropriately addresses health and safety standards; developmental, behavioral, and sensory screening, referral, and follow-up; health promotion including healthy eating habits, improved nutrition, and increased physical activity; oral health; and social and emotional development; and health literacy among parents and children;

Evidence for (C)(3)(b):

• To the extent the State has existing and projected numbers and percentages of Early Childhood Educators who receive training and support in meeting the health standards, the State shall submit documentation of these data. If the State does not have these data, the State shall outline its plan for deriving them.

Evidence

Evidence for (C)(3)(c):

• Any supporting evidence the State believes will be helpful to peer reviewers.

Performance Measures

• None required.

Evidence

Evidence for (C)(3)(d):

• Documentation of the State's existing and future resources that are or will be used to address the health, behavioral, and developmental needs of Children with High Needs. At a minimum, documentation must address the screening, referral, and follow-up of all Children with High Needs; how the State will promote the participation of Children with High Needs in ongoing health care as part of a schedule of well-child care; how the State will promote healthy eating habits and improved nutrition as well as increased physical activity for Children with High Needs; and how the State will promote health literacy for children and parents.

Performance Measures

Performance Measures for (C)(3)(d):

General goals to be provided at time of application, including baseline data and annual targets:

• Number of Children with High Needs Screened;

• Number of Children with High Needs referred for services and received follow-up/treatment;

• Number of Children with High Needs that participate in ongoing health care as part of a schedule of well-child care;

• Of these participating Children with High Needs, the number or percentage of children who are up-to-date in receiving services as part of a schedule of well-child care.

(C)(4) Engaging and supporting families.

Evidence

Evidence for (C)(4)(a):

• To the extent the State has established a progression of family engagement standards across the levels of Program Standards that meet the elements in criterion (C)(4)(a), submit—

○ The progression of culturally and linguistically appropriate family engagement standards used in the Program Standards that includes strategies successfully used to engage families in supporting their children's development and learning. A State's family engagement standards must address, but need not be limited to: Parent access to the program, ongoing two-way communication with families, parent education in child development, outreach to fathers and other family members, training and support for families as children move to preschool and kindergarten, social networks of support, intergenerational activities, linkages with community supports and adult and family literacy programs, parent involvement in decision making, and parent leadership development;

○ Documentation that this progression of standards includes activities that enhance the capacity of families to support their children's education and development.

Evidence

Evidence for (C)(4)(b):

• To the extent the State has existing and projected numbers and percentages of Early Childhood Educators who receive training and support on the family engagement strategies included in the Program Standards, the State shall submit documentation of these data. If the State does not have these data, the State shall outline its plan for deriving them.

Evidence

Evidence for (C)(4)(c):

• Documentation of the State's existing resources that are or will be used to promote family support and engagement statewide, including through home visiting programs and other family-serving agencies and the identification of new resources that will be used to promote family support and engagement statewide.

Performance Measures

• None required.

D. A Great Early Childhood Education Workforce

(D)(1) Developing a Workforce Knowledge and Competency Framework and a progression of credentials.

Evidence

Evidence for (D)(1):

- To the extent the State has developed a common, statewide Workforce Knowledge and Competency Framework that meets the elements in criterion (D)(1), submit:
  - The Workforce Knowledge and Competencies;
  - Documentation that the State's Workforce Knowledge and Competency Framework addresses the elements outlined in the definition of Workforce Knowledge and Competency Framework in the *Program Definitions* section of this notice and is designed to promote children's learning and development and improve outcomes.

Performance Measures

- None required.

(D)(2) Supporting Early Childhood Educators in improving their knowledge, skills, and abilities.

Evidence

- Any supporting evidence the State believes will be helpful to peer reviewers.

Performance Measures

Performance Measures for (D)(2)(d): General goals to be provided at time of application, including baseline data and annual targets:

- (D)(2)(d)(1): Number of postsecondary institutions and professional development providers that are aligned to the State's Workforce Knowledge and Competency Framework, and the number of Early Childhood Educators receiving credentials from those aligned postsecondary institutions or professional development providers.
- (D)(2)(d)(2): Number and percentage of Early Childhood Educators who are progressing to higher levels of credentials that align with the State's Workforce Knowledge and Competency Framework.

E. Measuring Outcomes and Progress

(E)(1) Understanding the status of children's learning and development at kindergarten entry.

Evidence

- Any supporting evidence the State believes will be helpful to peer reviewers.

Performance Measures

- None required.

(E)(2) Building or enhancing an early learning data system to improve instruction, practices, services, and policies.

Evidence

- Any supporting evidence the State believes will be helpful to peer reviewers.

Performance Measures

- None required.

BILLING CODE 4000–01–P

Appendix B. Scoring Rubrics

I. Introduction

To help ensure inter-reviewer reliability and transparency for the RTT-ELC applicants, ED and HHS have created and are publishing a rubric for scoring State applications. The pages that follow detail the rubric and allocation of point values that reviewers will be using. The rubric will be used by reviewers to ensure consistency across and within review panels.

The rubric allocates points to each criterion. In all, the RTT-ELC scoring rubric includes 17 selection criteria and two competitive preference priorities. These collectively add up to 300 points. The selection criteria are divided into two sections: Core Areas and Focused Investment Areas.

- Applicants must respond to all of the selection criteria within each of the two Core Areas: (A) Successful State Systems and (B) High-Quality, Accountable Programs.
- Applicants have more flexibility within each of the Focused Investment Areas: (C) Promoting Early Learning and Development Outcomes for Children; (D) A Great Early Childhood Education Workforce; and (E) Measuring Outcomes and Progress. In these sections, applicants may select which selection criteria to address, focusing on those that the State believes will have the most impact on school readiness for its Children with High Needs, given that State's context and the current status of its early learning and development activities. The Focused Investment Areas must be addressed as follows.

<u>Focused Investment Areas</u>

- The applicant must select and address--
  - At least two selection criteria from Focused Investment Area (C) Promoting Early Learning and Development Outcomes for Children; and
  - At least one selection criterion each from Focused Investment Areas (D) A Great Early Childhood Education Workforce and (E) Measuring Outcomes and Progress.
- Each Focused Investment Area (C), (D), and (E) is worth a specific number of points; these points will be evenly divided across the selection criteria that the applicant chooses to address in that section.

<u>Priorities</u>

Applicants address the absolute priority throughout their applications; they do not write separately to this priority. The absolute priority must be met in order for an applicant to receive funding.

Applications that choose to address a competitive preference priority will earn extra points under that priority if the reviewers determine that the response is of high quality. Applicants may choose to write to invitational priorities to extend the scope of the application; applicants are invited to address these and may apply funds from this grant to implement activities under them, but do not earn additional points for doing so.

Reviewers will be required to make thoughtful judgments about the quality of the State's application and will be assessing, based on the criteria, the comprehensiveness, feasibility, and likely impact of the State's application. Reviewers will also be asked to evaluate, for example, the extent to which the State has set ambitious but achievable annual targets in its application. Reviewers will also need to make informed judgments about the State's goals, the rationales for the Focused Investment Areas, the activities the State has chosen to undertake, and the timelines and credibility of the State's plans.

This appendix includes information about the point values for each criterion and priority, guidance on scoring, and the rubric that we will provide to reviewers.

II. Points Overview

The chart below shows the maximum number of points that are assigned to each criterion.

Race to the Top-Early Learning Challenge: Points Overview	Points Available	Percent
A. Successful State Systems		
(A)(1) Demonstrating past commitment to early learning and development.	20	
(A)(2) Articulating the State's rationale for its early learning and development reform agenda and goals.	20	
(A)(3) Aligning and coordinating work across the State	10	
(A)(4) Developing a budget to implement and sustain the work	15	
Core Area A Subtotal	**65**	**23**
B. High-Quality, Accountable Programs		
(B)(1) Developing and adopting a common, statewide Tiered Quality Rating and Improvement System	10	
(B)(2) Promoting participation in the State's Tiered Quality Rating and Improvement System	15	
(B)(3) Rating and monitoring Early Learning and Development Programs	15	
(B)(4) Promoting access to high-quality Early Learning and Development Programs	20	
(B)(5) Validating the State's Tiered Quality Rating and Improvement System	15	
Core Area B Subtotal	**75**	**27**
C. Promoting Early Learning and Development Outcomes for Children		
(C)(1) Developing and using statewide, high-quality Early Learning and Development Standards	60 (divided evenly across the criteria addressed)	
(C)(2) Supporting effective uses of Comprehensive Assessment Systems		
(C)(3) Identifying and addressing health, behavioral, and developmental needs		
(C)(4) Engaging and supporting families		
Focused Investment Area C Subtotal	**60**	**21**
D. A Great Early Childhood Education Workforce		
(D)(1) Developing Workforce Knowledge and Competency Framework and a progression of credentials	40 (divided evenly across the criteria addressed)	
(D)(2) Supporting Early Childhood Educators		
Focused Investment Area D Subtotal	**40**	**14**

Race to the Top-Early Learning Challenge: Points Overview	Points Available	Percent
E. Measuring Outcomes and Progress		
(E)(1) Understanding the status of children at kindergarten entry	40 (divided evenly across the criteria addressed)	
(E)(2) Building or enhancing an early learning data system		
Focused Investment Area E Subtotal	**40**	**14**
Total Points Available for Selection Criteria	**280**	
Competitive Priority 2: Including all Early Learning and Development Programs in the TQRIS	10	
Competitive Priority 3: Understanding status of learning and development at Kindergarten Entry	10	
Grand Total	**300**	

III. About Scoring

General Notes about Scoring

There are two terms that we use repeatedly in the notice: High-Quality Plan and "ambitious yet achievable" goals or targets. These are anchor terms for both applicants to understand and reviewers to use in guiding their scoring. We discuss each below.

- *A High-Quality Plan.* In determining the quality of a State's plan for a given selection criterion or competitive preference priority, reviewers will assess the extent to which the plan meets the definition (as provided in the notice) of a High-Quality Plan, including whether it is feasible and has a high probability of successful implementation and contains the following components--
  - (a) The key goals;
  - (b) The key activities to be undertaken; the rationale for the activities; and, if applicable, where in the State the activities will be initially implemented, and where and how they will be scaled up to achieve statewide implementation;
  - (c) A realistic timeline, including key milestones, for implementing each key activity;
  - (d) The party or parties responsible for implementing each activity and other key personnel assigned to each activity;
  - (e) Appropriate financial resources to support successful implementation of the plan;
  - (f) The information requested as supporting evidence, if any, together with any additional information the State believes will be helpful to peer reviewers in judging the credibility of the plan;
  - (g) The information requested in the performance measures, where applicable;
  - (h) How the State will address the needs of the different types of Early Learning and Development Programs, if applicable; and
  - (i) How the State will meet the needs of Children with High Needs, as well as the unique needs of special populations of Children with High Needs.

.

Using the information provided to them in the application, reviewers will assess the extent to which the proposed plan in a specific selection criterion is a High-Quality Plan that is credible, feasible to implement, and likely to result in the outcomes the State has put forward.

- *Ambitious yet achievable.* In determining whether a State has ambitious yet achievable goals or targets for a given selection criterion, reviewers will examine the State's goals or targets in the context of the State's plan and the evidence submitted (if any) in support of the plan. Reviewers will not be looking for any specific targets nor will they necessarily reward higher targets above lower ones with higher scores. Rather, reviewers will reward States for developing goals and targets that, in light of each State's plan and the current context and status of the work in that State, are shown to be "ambitious yet achievable."

About Assigning Points

Reviewers will assign points to an application for each selection criterion in Core Areas (A) and (B) and for each selection criterion that the State has chosen to address within Focused Investment Areas (C), (D), and (E). Reviewers will also assign points to the competitive preference priorities. Points for a selection criterion or priority (e.g., (B)(4) or Priority 2) are assigned by reviewers for the totality of the applicant's response; that is, reviewers need not divide the total available points equally across the sub-criteria.

There are two scoring rubrics to guide reviewers when awarding points:

- The Quality Rubric, which provides guidance on how to allocate points for high-, medium-, and low-quality responses to specified selection criteria; and
- The Quality and Implementation Rubric, which provides guidance on how to allocate points for selection criteria and competitive preference priority two where reviewers are assessing the quality of both plans and existing implementation.

The chart below indicates which rubric the State will use for each criterion or competitive preference priority.

Race to the Top-Early Learning Challenge: Rubric Table	**Points Available**	**Type of Rubric Used**
A. Successful State Systems		
(A)(1) Demonstrating past commitment to early learning and development.	20	Quality
(A)(2) Articulating the State's rationale for its early learning and development reform agenda and goals.	20	Quality
(A)(3) Aligning and coordinating work across the State	10	Quality and Implementation
(A)(4) Developing a budget to implement and sustain the work	15	Quality
Core Area A Subtotal	**65**	
B. High-Quality, Accountable Programs		
(B)(1) Developing and adopting a common, statewide Tiered Quality Rating and Improvement System	10	Quality and Implementation
(B)(2) Promoting participation in the State's Tiered Quality Rating and Improvement System	15	Quality and Implementation
(B)(3) Rating and monitoring Early Learning and Development Programs	15	Quality and Implementation

Race to the Top-Early Learning Challenge: Rubric Table	Points Available	Type of Rubric Used
(B)(4) Promoting access to high-quality Early Learning and Development Programs	20	Quality and Implementation
(B)(5) Validating the State's Tiered Quality Rating and Improvement System	15	Quality
Core Area B Subtotal	**75**	
C. Promoting Early Learning and Development Outcomes for Children		
(C)(1) Developing and using statewide, high-quality Early Learning and Development Standards	60 (divided evenly across criteria addressed)	Quality and Implementation
(C)(2) Supporting effective uses of Comprehensive Assessment Systems		
(C)(3) Identifying and addressing health, behavioral, and developmental needs		
(C)(4) Engaging and supporting families		
Focused Investment Area C Subtotal	**60**	
D. A Great Early Childhood Education Workforce		
(D)(1) Developing Workforce Knowledge and Competency Framework and a progression of credentials	40 (divided evenly across criteria addressed)	Quality and Implementation
(D)(2) Supporting Early Childhood Educators		
Focused Investment Area D Subtotal	**40**	
E. Measuring Outcomes and Progress		
(E)(1) Understanding the status of children at kindergarten entry	40 (divided evenly across criteria addressed)	Quality and Implementation
(E)(2) Building or enhancing an early learning data system		
Focused Investment Area E Subtotal	**40**	
Total Points Available for Selection Criteria	**280**	
Competitive Priority 2: Including all Early Learning and Development Programs in the TQRIS	10	Quality and Implementation
Competitive Priority 3: Understanding the status of children at kindergarten entry	10	Addressed in Table (A)(1)-12 or in selection criterion (E)(1)
Grand Total	**300**	

Quality Rubric

The following scoring rubric will be used to guide the reviewers in scoring selection criteria governed by the Quality Rubric. (See "General Notes about Scoring" for more information about how reviewers will assess High-Quality Plans and "ambitious yet achievable" targets and goals.)

	Percentage of Available Points Awarded
High-quality response	80-100%
Medium/high-quality	50-80%

	Percentage of Available Points Awarded
response	
Medium/low-quality response	20-50%
Low-quality response	0-20%

Quality and Implementation Rubric

This scoring rubric provides guidance on how to allocate points for selection criteria and Competitive Preference Priority 2 where reviewers are assessing both plans and existing implementations. In reviewing the elements for each selection criterion, reviewers will need to consider the degree of implementation; more points are awarded for implementation efforts in the implementation phase than those that are in the planning stages, and more points are awarded for efforts where implementation is complete or closer to completion. When evaluating the degree of implementation, reviewers will consider:

- The extent to which each element in the selection criterion is implemented in the State;
- The extent to which the State has implemented each element across different types of Early Learning and Development Programs, if applicable; and
- The extent to which the State has implemented each element across the State's special populations of Children with High Needs, if applicable.

The reviewers will also need to make a determination about the quality of the response to each element. High-quality responses are rewarded over low-quality responses. Therefore, elements that are fully implemented with high quality are rewarded over plans that are of fully implemented but of lower quality. (See "General Notes About Scoring" for more information about how reviewers will assess High-Quality Plans and "ambitious yet achievable" targets and goals.) The chart below shows how points will be awarded.

	Not or Minimally Implemented	Partially Implemented	Substantially or Fully Implemented
High-quality response	40-60%	60-80%	80-100%
Medium-quality response	1-40%	10-60%	20-80%
Low-quality response	0%	0-10%	0-20%

About Priorities

There are three types of priorities in the RTT-ELC competition.

- Applicants should address the absolute priority across the entire application and should not address it separately. It will be assessed by reviewers after they have fully reviewed and evaluated the entire application, to ensure that the application has met the priority. If an application has not met the priority, it will be eliminated from the competition. A State meets the absolute priority if a majority of reviewers determines that the State has met the absolute priority
- The competitive preference priorities earn points in a manner similar to selection criteria.

- Competitive Preference Priority 2 is worth up to 10 points and will be assessed using the Quality and Implementation Rubric.
- Competitive Preference Priority 3 is worth 10 points; all 10 points are earned if the competitive preference priority is met. A State will earn competitive preference priority points if a majority of reviewers determines that the State has met the competitive preference priority. No points are earned if a majority of reviewers determine that the applicant has not met the competitive preference priority.

  A State meets the competitive preference priority for—
  - Demonstrating , by verifying that all elements in Table (A)(1)-12 have been met, that the State has already implemented a Kindergarten Entry Assessment that meets selection criterion (E)(1); or
  - Writing to selection criterion (E)(1) and earning a score of at least 70 percent of the maximum points available for that criterion.

- The invitational priorities are addressed in their own separate sections. While applicants are invited to write to the invitational priorities, these will not earn points.

In the Event of a Tie

If two or more applications have the same score and there is not sufficient funding to support all of the tied applicants, the applicants' overall scores on Core Area (B) will be used to break the tie.

Appendix C. Participating State Agency Memorandum of Understanding

Background for Memorandum of Understanding

Each Participating State Agency identified in a State's Race to the Top-Early Learning Challenge (RTT-ELC) State Plan is required to enter into a Memorandum of Understanding (MOU) or other binding agreement with the State's Lead Agency that specifies the scope of the work that will be implemented by the Participating State Agency. The purpose of the MOU or other binding agreement is to define a relationship between the Lead Agency and the Participating State Agency that is specific to the RTT-ELC competition; the MOU or other binding agreement is not meant to detail all typical aspects of grant coordination or administration.

To support States in working efficiently with their Participating State Agencies to affirm each Participating State Agency's participation in the State Plan, ED and HHS have produced a model MOU, which is attached. This model MOU may serve as a template for States; however, States are not required to use it. States may use a document other than the model MOU, as long as it includes the key features noted below and in the model MOU. States should consult with their State attorneys on what is most appropriate. States may allow multiple Participating State Agencies to sign a single MOU or other binding agreement, with customized exhibits for each Participating State Agency, if the State so chooses.

At a minimum, an RTT-ELC MOU or other binding agreement should include the following key features, each of which is described in detail below and exemplified in the attached model MOU: (i) Terms and conditions; (ii) a scope of work; and, (iii) authorized signatures.

(i) Terms and conditions: Each Participating State Agency must sign a standard set of terms and conditions that includes, at a minimum, key roles and responsibilities of the Lead Agency and the Participating State Agency; State recourse for non-performance by the Participating State Agency; and assurances that make clear what the Participating State Agency is agreeing to do.

(ii) Scope of work: RTT-ELC MOUs or other binding agreements must include a preliminary scope of work (included in the model RTT-ELC MOU as Exhibit I) that is completed by each Participating State Agency. The scope of work must be signed and dated by an authorized Participating State Agency official and an authorized Lead Agency official. In the interest of time and in consideration of the effort it will take for the Lead Agency and Participating State Agencies to develop detailed work plans for RTT-ELC, the scope of work submitted by Participating State Agencies and Lead Agencies as part of a State's application may be preliminary. Preliminary scopes of work must, at a minimum, identify all applicable portions of the State Plan that the Participating State Agency is agreeing to implement and include the required assurances. (Note that in order for a State to be eligible for the RTT-ELC competition, the Lead Agency must have executed with each Participating State Agency an

MOU or other binding agreement, which the State must attach to its application and which must describe the Participating State Agency's level of participation in the grant and must include the required assurances.)

If a State is awarded an RTT-ELC grant, Participating State Agencies will have up to 90 days to complete final scopes of work, which must contain detailed work plans that are consistent with each Participating State Agency's preliminary scope of work and with the State's grant application, and must include the Participating State Agencies' specific goals, activities, timelines, budgets, and key personnel.

(iii) Authorized Signatures: The signatures on the MOU or other binding agreement demonstrate an acknowledgement of the relationship between the Participating State Agency and the Lead Agency. With respect to the relationship between the Participating State Agency and the Lead Agency, the Lead Agency's counter-signature on the MOU or other binding agreement indicates that the Participating State Agency's commitment is consistent with the requirement that a Participating State Agency implement all applicable portions of the State Plan.

Model Participating State Agency Memorandum of Understanding

This Memorandum of Understanding ("MOU") is entered into by and between _____ ("Lead Agency") and _____ ("Participating State Agency"). The purpose of this agreement is to establish a framework of collaboration, as well as articulate specific roles and responsibilities in support of the State in its implementation of an approved Race to the Top-Early Learning Challenge grant project.

I. ASSURANCES

The Participating State Agency hereby certifies and represents that it:

1) Agrees to be a Participating State Agency and will implement those portions of the State Plan indicated in Exhibit I, if the State application is funded;

2) Agrees to use, to the extent applicable and consistent with the State Plan and Exhibit I:
(a) A set of statewide Early Learning and Development Standards;
(b) A set of statewide Program Standards;
(c) A statewide Tiered Quality Rating and Improvement System; and
(d) A statewide Workforce Knowledge and Competency Framework and progression of credentials.

(*Please note that Participating State Agencies must provide these assurances in order for the State to be eligible for a Race to the Top-Early Learning Challenge grant.*)

3) Has all requisite power and authority to execute and fulfill the terms of this MOU;

4) Is familiar with the State's Race to the Top-Early Learning Challenge grant application and is supportive of and committed to working on all applicable portions of the State Plan;

5) Will provide a Final Scope of Work only if the State's application is funded and will do so in a timely fashion but no later than 90 days after a grant is awarded; and will describe the Participating State Agency's specific goals, activities, timelines, budgets, and key personnel ("Participating State Agency Plan") in a manner that is consistent with the Preliminary Scope of Work (Exhibit I), with the Budget included in section VIII of the State Plan (including existing funds, if any, that the Participating State Agency is using for activities and services that help achieve the outcomes of the State Plan; and

6) Will comply with all of the terms of the Race to the Top-Early Learning Challenge Grant, this agreement, and all applicable Federal and State laws and regulations, including laws and regulations applicable to the Race to the Top-Early Learning Challenge program, and the applicable provisions of EDGAR (34 CFR Parts 75, 77, 79, 80, 82, 84, 85, 86, 97, 98 and 99).

II. PROJECT ADMINISTRATION

A. PARTICIPATING STATE AGENCY RESPONSIBILITIES

In assisting the Lead Agency in implementing the tasks and activities described in the State's Race to the Top- Early Learning Challenge grant application, the Participating State Agency will:

1) Implement the Participating State Agency Scope of Work as identified in the Exhibit I of this agreement;
2) Abide by the governance structure outlined in the State Plan;
3) Abide by the Participating State Agency's Budget included in section VIII of the State Plan (including the existing funds from Federal, State, private and local sources, if any, that the Participating State Agency is using to achieve the outcomes in the RTT-ELC State Plan);
4) Actively participate in all relevant meetings or other events that are organized or sponsored by the State, by the U.S. Department of Education ("ED"), or by the U.S. Department of Health and Human Services ("HHS");
5) Post to any Web site specified by the State, ED, or HHS, in a timely manner, all non-proprietary products and lessons learned developed using Federal funds awarded under the RTT-ELC grant;
6) Participate, as requested, in any evaluations of this grant conducted by the State, ED, or HHS;
7) Be responsive to State, ED, or HHS requests for project information including on the status of the project, project implementation, outcomes, and any problems anticipated or encountered, consistent with applicable local, State and Federal privacy laws.

B. LEAD AGENCY RESPONSIBILITIES

In assisting the Participating State Agencies in implementing their tasks and activities described in the State's Race to the Top-Early Learning Challenge application, the Lead Agency will:

1) Work collaboratively with, and support the Participating State Agency in carrying out the Participating State Agency Scope of Work, as identified in Exhibit I of this agreement;
2) Timely award the portion of Race to the Top-Early Learning Challenge grant funds designated for the Participating State Agency in the State Plan during the course of the project period and in accordance with the Participating State Agency's Scope of Work, as identified in Exhibit I, and in accordance with the Participating State Agency's Budget, as identified in section VIII of the State's application;
3) Provide feedback on the Participating State Agency's status updates, any interim reports, and project plans and products;
4) Keep the Participating State Agency informed of the status of the State's Race to the Top-Early Learning Challenge grant project and seek input from the Participating State Agency, where applicable, through the governance structure outlined in the State Plan;
5) Facilitate coordination across Participating State Agencies necessary to implement the State Plan; and
6) Identify sources of technical assistance for the project.

C. JOINT RESPONSIBILITIES

1) The Lead Agency and the Participating State Agency will each appoint a key contact person for the Race to the Top-Early Learning Challenge grant.

2) These key contacts from the Lead Agency and the Participating State Agency will maintain frequent communication to facilitate cooperation under this MOU, consistent with the State Plan and governance structure.

3) Lead Agency and Participating State Agency personnel will work together to determine appropriate timelines for project updates and status reports throughout the grant period.

4) Lead Agency and Participating State Agency personnel will negotiate in good faith toward achieving the overall goals of the State's Race to the Top-Early Learning Challenge grant, including when the State Plan requires modifications that affect the Participating State Agency, or when the Participating State Agency's Scope of Work requires modifications.

D. STATE RECOURSE IN THE EVENT OF PARTICIPATING STATE AGENCY'S FAILURE TO PERFORM

If the Lead Agency determines that the Participating State Agency is not meeting its goals, timelines, budget, or annual targets, or is in some other way not fulfilling applicable requirements, the Lead Agency will take appropriate enforcement action, which could include initiating a collaborative process by which to attempt to resolve the disagreements between the Lead Agency and the Participating State Agency, or initiating such enforcement measures as are available to the Lead Agency, under applicable State or Federal law.

III. MODIFICATIONS

This Memorandum of Understanding may be amended only by written agreement signed by each of the parties involved, in consultation with ED.

IV. DURATION

This Memorandum of Understanding shall be effective, beginning with the date of the last signature hereon and, if a Race to the Top- Early Learning Challenge grant is received by the State, ending upon the expiration of the Race to the Top- Early Learning Challenge grant project period.

V. SIGNATURES

Authorized Representative of Lead Agency:

_____

Signature Date

_____

Print Name Title

Authorized Representative of Participating State Agency:

_____

Signature Date

_____

Print Name Title

EXHIBIT I – PARTICIPATING STATE AGENCY SCOPE OF WORK

The Participating State Agency hereby agrees to participate in the State Plan, as described in the State's application, and more specifically commits to undertake the tasks and activities described in detail below.

Selection Criterion	Participating Party	Type of Participation
Example Row— *shows an example of criterion (B)(1) for the State agency that oversees state-funded preschool, IDEA, and Head Start Collab Office*	• *State-funded preschool* • *IDEA preschool special ed* • *Head Start Collab Office*	*Representatives from each program are sitting on the state committee to define statewide QRIS program standards*
	• *Head Start Collab Office*	*Responsible for cross-walking Head Start performance standards with the new program standards*
(B)(1)		
(B)(2)		
(B)(3)		
(B)(4)		
(B)(5)		
(C)(1)		
(C)(2)		
(C)(3)		
(C)(4)		
(D)(1)		
(D)(2)		
(E)(1)		
(E)(2)		

Signature *(Authorized Representative of Lead Agency)* Date

Signature *(Authorized Representative of Participating State Agency)* Date

[FR Doc. 2011–21756 Filed 8–25–11; 8:45 am]
BILLING CODE 4000–01–C

FEDERAL REGISTER

Vol. 76 Friday,

No. 166 August 26, 2011

Part IV

Federal Housing Finance Board

12 CFR Part 908

Federal Housing Finance Agency

12 CFR Part 1209

Department of Housing and Urban Development

Office of Federal Housing Enterprise Oversight

12 CFR Part 1780

Rules of Practice and Procedure; Final Rule

FEDERAL HOUSING FINANCE BOARD

12 CFR Part 908

FEDERAL HOUSING FINANCE AGENCY

12 CFR Part 1209

DEPARTMENT OF HOUSING AND URBAN DEVELOPMENT

Office of Federal Housing Enterprise Oversight

12 CFR Part 1780

RIN 2590–AA14

Rules of Practice and Procedure

AGENCIES: Federal Housing Finance Board; Federal Housing Finance Agency; and Office of Federal Housing Enterprise Oversight.

ACTION: Final rule.

SUMMARY: The Federal Housing Finance Agency (FHFA) is adopting a final rule to implement the Housing and Economic Recovery Act of 2008 (HERA) amendments to the Federal Housing Enterprises Financial Safety and Soundness Act of 1992 (Safety and Soundness Act) and the Federal Home Loan Bank Act (Bank Act) governing civil administrative enforcement actions by FHFA, under which FHFA's authority was consolidated to initiate enforcement proceedings against the Federal National Mortgage Association (Fannie Mae) and the Federal Home Loan Mortgage Corporation (Freddie Mac) (together, the Enterprises), the Federal Home Loan Banks (the Banks) (collectively, the regulated entities), and their entity-affiliated parties. This rule removes the existing Rules of Practice and Procedure of the Federal Housing Finance Board (Finance Board) and the Office of Federal Housing Enterprise Oversight (OFHEO), and establishes new FHFA regulations.

DATES: This rule is effective September 26, 2011.

FOR FURTHER INFORMATION CONTACT: Stephen E. Hart, Managing Associate General Counsel, Federal Housing Finance Agency, 1700 G Street, NW., Fourth Floor, Washington, DC 20552, telephone (202) 414–8960 (not a toll-free number). The telephone number for the Telecommunications Device for the Deaf is: (800) 877–8339.

SUPPLEMENTARY INFORMATION: The Supplementary Information is organized according to this table of contents:

I. Background
II. Summary of Comments
III. Final Rule
IV. Paperwork Reduction Act
V. Regulatory Flexibility Act

I. Background

A. Regulatory History

On August 12, 2010, FHFA published for comment a proposed rule to implement the provisions of HERA authorizing FHFA to take civil enforcement actions in accordance with sections 1371 through 1379D of the Safety and Soundness Act under specified conditions. 75 FR 49314 (proposed rule). The proposed rule included proposed Rules of Practice and Procedure for hearings on the record in enforcement actions, rules of practice governing individuals who practice before FHFA, provisions for periodic civil money penalty adjustments, and the rules governing suspension or removal of an entity-affiliated party charged with a felony. The comment period closed on October 12, 2010.

FHFA received two comment letters on the proposed rule, one from the 12 Banks and the other from two trade associations, that generally were supportive of the proposal, and recommended ways in which the regulation could be amended to better achieve its objectives. A discussion of those comments follows. The key substantive issues raised by the comment letters focused principally on procedural refinements, whether the procedures for hearings would apply to enforcement actions on housing goals, and whether the rule was intended to cover investigative subpoenas. In this final rule, FHFA has incorporated certain revisions suggested by these commenters, but in other respects retains the substance of the proposed rule for the reasons stated in the comment summary below.

B. HERA Amendments

On July 30, 2008, HERA, Public Law No. 110–289, 122 Stat. 2654, became law and created FHFA as an independent agency of the Federal government.[1] Among other things, HERA transferred to FHFA the supervisory and oversight responsibilities over the Enterprises, previously vested in OFHEO, and the Banks, which had been regulated by the Finance Board. HERA established FHFA as the financial safety and soundness regulator to oversee the prudential operations of the regulated entities and to ensure that they operate in a safe and sound manner; remain adequately capitalized; foster liquid, efficient, competitive and resilient national housing finance markets; comply with the Safety and Soundness Act and their respective authorizing statutes, as well as all rules, regulations, guidelines, and orders issued under law; and carry out their missions through activities that are authorized by law and are consistent with the public interest. *See* 12 U.S.C. 4513. The Enterprises and Banks continue to operate under regulations promulgated by OFHEO and the Finance Board, respectively, until such time as the existing regulations are supplanted by regulations promulgated by FHFA.[2]

C. HERA-Enhanced Enforcement Authority

Because the regulated entities play a key role in housing finance and the U.S. economy, and FHFA's mission is to provide effective supervision, regulation, and housing mission oversight of the Enterprises and the Banks, HERA amended the Safety and Soundness Act to make explicit the general regulatory and supervisory authority of FHFA and the Director. *See generally,* 12 U.S.C. 4511, 4513, 4517, 4518, and 4526. The HERA amendments to sections 1371 through 1379D of the Safety and Soundness Act (12 U.S.C. 4631 through 4641) authorize the Director to initiate administrative enforcement proceedings to issue cease and desist orders and temporary cease and desist orders and to impose civil money penalties against regulated entities, entity-affiliated parties, and the Office of Finance of the Federal Home Loan Bank System, in accordance with applicable law.

Additionally, the HERA provisions in section 1377(a) of the Safety and Soundness Act (12 U.S.C. 4636a(a)), give the Director express authority to suspend or remove from office, or to prohibit any further participation in the conduct of the affairs of a regulated entity, an entity-affiliated party, or any officer, director, or management of the Office of Finance, for any violation, practice, or breach of such party's fiduciary duty, as set forth therein. Thus, in accordance with section 1377(b) of the Safety and Soundness Act (12 U.S.C. 4636a(b)), the Director can

[1] *See generally,* HERA, Division A, Titles I–III, Public Law 110–289, 122 Stat. 2654, sections 1101 *et seq.* (July 30, 2008). Specifically, section 1101 of HERA amended section 1311(a) of the Safety and Soundness Act, Title XIII, Public Law 102–550, 106 Stat. 3672, 3941–4012, sections 1301 *et seq.* (1992), to establish FHFA as an independent agency of the Federal government. *See* 12 U.S.C. 4511(a).

[2] The existing regulations are enforceable by the Director, until such time as they are modified, terminated, set aside, or superseded by the Director, as provided by HERA sections 1302 and 1312, 122 Stat. 2795, 2798. *See also* 75 FR 49314, 49315, n. 6.

take immediate action to suspend or remove from office, or to prohibit the participation in any manner in the conduct of the affairs of the regulated entity, any party subject to an action under section 1377(a) of the Safety and Soundness Act.

Moreover, under section 1377(h) of the Safety and Soundness Act (12 U.S.C. 4636a(h)), with respect to any entity-affiliated party who is charged with a Federal or state crime involving dishonesty or breach of trust, which is punishable by imprisonment for more than one year, in any criminal information, indictment or complaint, the Director is authorized to suspend such party from office or prohibit him or her from any further involvement in the conduct of the affairs of a regulated entity if continued service or participation by such party could pose a threat to, or impair public confidence in, the regulated entity. *See* 12 U.S.C. 4636a(h)(1)(A). The statute prescribes that a copy of the suspension notice shall be served on each relevant regulated entity, *see* 12 U.S.C. 4636a(h)(1)(B)(i), and specifies streamlined procedures for such actions.

Prior to HERA section 1379B of the Safety and Soundness Act (12 U.S.C. 4641) established the subpoena power of the Director in administrative proceedings. Under the HERA amendments, section 1379D of the Safety and Soundness Act makes explicit agency subpoena powers in investigations and examinations, and authorizes any designated representative of the Director to issue, revoke, quash, or modify a subpoena or subpoena *duces tecum,* as follows:

> In the course of or in connection with any proceeding, examination, or investigation under this chapter, the Director or any designated representative thereof, including any person designated to conduct any hearing under this subchapter shall have the authority * * * to revoke, quash, or modify subpoenas and subpoenas *duces tecum.*

12 U.S.C. 4641. This provision, however, should not be read to subject investigative subpoenas, subpoenas issued in connection with an examination, or conservator and receiver subpoenas to the procedural requirements that would apply in administrative enforcement proceedings.

Thus, under these enhanced powers, the Director has at his or her disposal a broad range of enforcement mechanisms to enforce, as needed, applicable law, rules, orders, and agreements pertaining to the safe and sound operation of the Enterprises and Banks.[3] In fact, much of FHFA's enforcement authority parallels that of the Federal bank and thrift regulators who adopted uniform rules of practice and procedure for enforcement actions pursuant to section 916 of the Financial Institutions Reform, Recovery and Enforcement Act of 1989 (FIRREA), Public Law 101–73, 103 Stat. 183 (1989) (Uniform Rules). The Uniform Rules set the standard for formal enforcement proceedings, and served as the model for the enforcement regulations adopted by the Finance Board in 2002 (12 CFR part 908) and OFHEO in 1999 (as amended in 2001) (12 CFR part 1780).[4]

FHFA has determined mainly to adopt these procedures, with some changes that reflect the differences in the respective regulatory structures. Thus, the final rule builds upon the Uniform Rules and the rules previously adopted by the Finance Board and OFHEO.

Cease and desist enforcement proceedings are commenced by serving a notice of charges that is to set forth the facts constituting the practice or violation and fix a time and place for a hearing to determine on the record whether an order to cease and desist from such practice or violation should issue. *See* 12 U.S.C. 4631(c)(1). Such hearings are governed by section 1373 of the Safety and Soundness Act. *See generally,* 12 U.S.C. 4633. In fact, section 1373(a)(1) of the Safety and Soundness Act (12 U.S.C. 4633(a)(1)) requires that any hearing under sections 1371 (cease and desist order), 1376(c) (civil money penalty assessment), or 1377 (removal or suspension orders; except removal actions under section 1377(h) of the Safety and Soundness Act) be held on the record and conducted in accordance with sections 554, 556, and 557 of the Administrative Procedure Act (APA).[5] *See* 12 U.S.C. 4633(a)(1), (3).

Therefore, prior to issuing a cease-and-desist order, imposing civil money penalties, or ordering the suspension or removal of an entity-affiliated party or any officer, director, or management of the Office of Finance, FHFA must conduct a hearing on the record and provide the subject of such an order with notice and the opportunity to participate in a formal hearing. The final rule establishes the procedural requirements for any such hearing on the record.[6]

D. The Proposed Rule

The proposed rule was to govern administrative hearings on the following matters that FHFA by law must conduct on the record under APA formal hearing requirements:

(1) Enforcement proceedings under sections 1371 through 1379D of the Safety and Soundness Act (12 U.S.C. 4631 through 4641) (except section 1377(h) (12 U.S.C. 4636a));

(2) Removal, prohibition, and civil money penalty proceedings for violations of post-employment restrictions imposed by applicable law; and

(3) Proceedings under section 102 of the Flood Disaster Protection Act of 1973, as amended (42 U.S.C. 4012a), to assess civil money penalties.

Because the procedural framework for formal hearings on the record is appropriate for other types of enforcement actions, the formal hearing procedures were enumerated separately in subpart C of the proposed rule. The procedural framework established in subpart C of the proposed rule may accommodate formal enforcement actions under sections 1341 and 1345 of the Safety and Soundness Act pertaining to the achievement of housing goals and enforcement actions to enforce the regulated entities' reporting requirements under section

[3] The Director has broad safety and soundness enforcement authority under sections 1371 through 1379D of the Safety and Soundness Act, (subtitle C—Enforcement Provisions) (12 U.S.C. 4631 through 4641), in furtherance of the Director's general safety and soundness regulatory authority. Additionally, the Director has authority under subtitle B of the Safety and Soundness Act (sections 1361 through 1369E) to set and enforce capital levels or to appoint FHFA as conservator or receiver for a regulated entity. More important, as amended by HERA, section 1311(c) of the Safety and Soundness Act expressly preserves these powers in addition to the Director's general supervisory and regulatory authority under subsection (b) of section 1311 of the Safety and Soundness Act, as amended: ''[t]he authority of the Director to take actions under subtitles B and C shall not in any way limit the general supervisory and regulatory authority granted to the Director under subsection (b).'' *See* 12 U.S.C. 4511(c).

[4] The proposed rule included a discussion of its origin in the Uniform Rules. *See* 75 FR 49314, 49316–17.

[5] Public Law 89–554, 80 Stat. 381 (1966) (codified at 5 U.S.C. 551–559; 701–706). Formal adjudications (*i.e.,* hearings ''on the record'') are governed by chapters 5 and 7 of the APA (5 U.S.C. 554, 556, and 557). The APA grants each agency ''the authority necessary to comply with the requirements of [chapter 5] through the issuance of rules or otherwise.'' *See* 5 U.S.C. 559.

[6] No hearing on the record is required prior to the issuance of an order under section 1377(h) of the Safety and Soundness Act (12 U.S.C. 4636a(h)), for the suspension or removal of an entity-affiliated party charged with a felony. Once served, the subject may timely submit a written request to appear before the Director to show the continued service would not pose a threat to the interests of the regulated entity or threaten to impair public confidence in the regulated entity. This provision does not authorize or require a formal hearing on the record; therefore, the subpart C provisions of the proposed rule do not govern such proceedings.

1314 of the Safety and Soundness Act (12 U.S.C. 4514).

As proposed, the rule would have replaced the Rules of Practice and Procedure previously adopted by OFHEO (12 CFR part 1780) and the Finance Board (12 CFR part 908).[7] Many of the existing procedures were retained in the proposed rule without significant revisions. The proposed rule set out the requirements for the commencement of an enforcement proceeding by service of a notice of charges; the appointment of a presiding officer; hearing procedures and permissible activities; the conduct of the trial-like testimonial phase of the hearing process; the presiding officer's filing with the Director of a recommended decision and order, along with the hearing record; the decision by the Director; and the qualifications and disciplinary rules for practice before FHFA.[8]

The proposed process was similar to the existing rules in that during the course of the hearing, the presiding officer would control virtually all aspects of the proceeding. In particular, the proposed rule would have established that the presiding officer would determine the hearing schedule; preside over all conferences; rule on non-dispositive motions, discovery, and evidentiary issues; and ensure that the proceeding is prompt, fair, and impartial, and allows for the creation of a written record upon which the recommended decision is based.[9]

The proposed rule retained the existing requirement that the Director issue a final ruling within 90 days of the date on which the Director serves notice upon the parties that the hearing record is complete and the case has been submitted for final decision. The proposed rule similarly would have reserved to the Director the authority to dismiss the proceeding, in whole or in part, or to make a final determination of the merits of the proceeding.

Informed by OFHEO's prior experience in conducting enforcement proceedings under its existing Rules of Practice and Procedure, FHFA identified certain issues for clarification in its revised rule. Accordingly, the proposed rule would have included a definition of ''notice of charges'' to establish the notice of charges as the charging document that is served by FHFA on a regulated entity or party as provided in sections 1371 through 1377 of the Safety and Soundness Act (12 U.S.C. 4631 through 4636a) to initiate enforcement proceedings. Additionally, to avert any future confusion, the proposed rule would have stated in a new definition in § 1209.3 that a ''notice of charges'' is to be distinguished from an ''effective notice'' within the meaning of 12 U.S.C. 4635(a), to more clearly articulate that this provision does not confer upon a Federal district court subject matter jurisdiction over FHFA's administrative enforcement proceeding. That is, although a Federal district court has authority to enforce an effective notice or order that has been issued by FHFA, such a notice is not the same as a notice of charges and the court does not obtain subject matter jurisdiction over an ongoing administrative enforcement proceeding through this provision.

The proposed rule sought to make the presiding officer's authority more explicit in several respects. A principal revision in § 1209.11(b)(1) made explicit the authority of the presiding officer to hold an initial scheduling conference to control the proceedings and set the date for the testimonial phase of the hearing in a scheduling order issued in conjunction with the initial scheduling conference set under § 1209.36 of the proposed rule. As a corollary to the authority of the presiding officer to set the date of the evidentiary hearing in a scheduling order, § 1209.23 of the proposed rule would clarify that the notice of charges is to specify that the testimonial hearing date will be determined when the presiding officer holds the initial scheduling conference and issues a scheduling order within 30 to 60 days of service of the notice of charges.

Additionally, the proposed rule sought to arm the presiding officer with sufficient autonomy to control the pace and focus of discovery to prohibit unnecessary or burdensome discovery. First, § 1209.11(b)(5) of the proposed rule confirmed that the presiding officer has full authority to issue and enforce discovery orders. Second, § 1209.11(b)(8) of the proposed rule was to effectively codify the broad powers of the presiding officer to regulate the scope, timing, and completion of discovery of any non-privileged matter that is materially relevant to the charges or allowable defenses in the proceeding.

Third, the proposed rule made explicit the requirement that matters or documents subject to discovery must be ''materially relevant'' to the charges or allowable defenses in the proceeding. This measure of allowable discovery was stated to support the presiding officer's discretion and enhance his ability to deny discovery requests that seek information having no logical connection to a consequential fact that would tend to prove or to disprove a matter in issue. The proposed rule thus would have included a parallel authority in § 1209.11(b)(11) to underscore that the presiding officer has ample authority to admit, exclude, or limit evidence according to its material relevance to the legally cognizable claims and defenses presented by a notice of charges.

E. Differences

When promulgating any regulation that may have future affect relating to the Banks, the Director is required by section 1201 of HERA to consider the differences between the Banks and the Enterprises with respect to the Banks' cooperative ownership structure; mission of providing liquidity to members; affordable housing and community development mission; capital structure; and joint and several liability. *See* section 1201 Public Law 110–289, 122 Stat. 2782–83 (*amending* 12 U.S.C. 4513(f)[sic]).[10] As noted in the preamble to the proposed rule, the Director considered the differences between the Banks and the Enterprises, as they relate to the above factors, and determined that the rule is appropriate. *See* 75 FR 49314, 49315. FHFA also requested comments from the public about whether differences related to these factors should have resulted in any revisions to the proposed rule. No comments specific to that request were received. In sum, the five differences identified in section 1201 of HERA do not require a different enforcement regulation for the Banks than for the Enterprises. Therefore, the comparative analysis under section 1201 of HERA undertaken for the proposed rule required no changes.

On the effective date, this final rule will, among other things, repeal and replace the current Finance Board Rules of Practice and Procedure regulation governing formal enforcement proceedings (12 CFR part 908), revised to implement the HERA-amended enforcement scheme.

II. Summary of Comments

FHFA received two comment letters on the proposed rule. In their respective letters the Banks and the trade associations commented on more than two dozen provisions and noted a number of broader issues presented in the proposed rule. Those broader issues centered on: whether the evidentiary standard stated in the rule is comparable to that of the Uniform Rules; whether the rule may apply to

[7] *See* 75 FR 49314, 49317, n. 17, 18.

[8] *See* id. at n. 19.

[9] *See* id. at n. 20.

[10] So in original; no paragraphs (d) and (e) were enacted. *See* 12 U.S.C.A. 4513 n 1.

enforcement of housing goals; whether some of the procedures may provide FHFA with a tactical advantage over the responding party; whether the rule is intended to apply to investigative subpoenas; whether the provisions on district court jurisdiction should be clarified; whether the rule should be revisited to impose the standards of conduct for parties appearing before the Director on agency employees, and whether the rule should impose on agency staff and the presiding officer a confidentiality requirement under the Trade Secrets Act. These issues are addressed in turn below.

Evidentiary Standard

One commenter queried whether the evidentiary standard expressed in the proposed rule strays from the model Uniform Rules. FHFA has considered the comment and concluded that the rule does not depart from the evidentiary standard for discovery in enforcement hearings embodied in the Uniform Rules. Indeed, it is fully consistent with the Federal Deposit Insurance Corporation's rule that allows discovery of ''any matter, not privileged, that has material relevance to the merits of the pending action.'' 12 CFR 308.24(b). This rule adopts a similar standard that the evidence must be materially relevant to the charges or allowable defenses presented in the action. The ''materially relevant'' standard ensures that the information to be introduced for the record will have a logical connection to a consequential fact that tends to prove or disprove a matter in issue.

The discovery requirement was made more explicit also to underscore that in an administrative enforcement hearing the presiding officer must have authority to frame the issues, control the pace of the proceedings, and to admit, exclude or limit evidence according to its materiality, relevance, and analytical usefulness in the context of the claims and available defenses. This standard for discovery matters is fully consistent with the APA requirement for formal administrative hearings that an agency ''as a matter of policy shall provide for the exclusion of irrelevant, immaterial, or unduly repetitive evidence.'' *See* 5 U.S.C. 556(d). Moreover, it fosters conclusions based on a hearing record that comprises ''reliable, probative, and substantial evidence.'' *See id.* It is, therefore, essential for evidentiary probity to make express this clear standard in order to promote the fair resolution of issues in an equitable and timely fashion, and for the conservation of the resources of the presiding officer. This issue also is discussed below in response to a comment on § 1209.11(b) of the proposed rule.

Enforcement of Enterprise Housing Goals

The grounds and remedies for cease and desist enforcement proceedings relative to Enterprise housing goals (exclusive of the requirements pertaining to underserved markets) in 12 U.S.C. 4581 differ from those for cease and desist enforcement proceedings under 12 U.S.C. 4631, but the hearing process called for in 12 U.S.C. 4582 for enforcement of housing goals is essentially identical to the hearing procedure requirements set out in 12 U.S.C. 4633. Therefore, the proposed rule allowed that in the future the hearing procedures in subpart C of the proposed rule might be utilized for housing goals enforcement hearings.

One commenter opined that application of the hearing procedures in subpart C of the proposed rule to Enterprise housing goals enforcement proceedings ''appears sensible,'' but recommended that FHFA should be clear about which subpoena authority would be used in such actions because the subpoena authority in 12 U.S.C. 4588 differs in certain respects. For example, the treatment of witness fees in 12 U.S.C. 4588 has provisions not found in the subpoena authority in 12 U.S.C. 4641. Moreover, following the HERA amendments, 12 U.S.C. 4641 applies to administrative enforcement actions, examinations, and investigations. *Compare* 12 U.S.C. 4588 *with* 12 U.S.C. 4641. Without presaging every possible scenario, 12 U.S.C. 4588, the subpoena authority for housing goals administrative enforcement proceedings under 12 U.S.C. 4581, appears to be controlling in such actions. Without more information, specific guidance on such issues in advance of potential future rulemakings would be premature.

Tactical Advantages

One commenter questioned whether certain provisions of the proposed rule provided for symmetrical treatment of parties or their counsel in an enforcement action, in particular with respect to the filing of documents under seal (§ 1209.12(c)), requesting a closed hearing (§ 1209.12(d)), and authority to sanction counsel for *ex parte* contact of decisional employees (§§ 1209.14 and 1209.70). These sections are not unfairly weighted in favor of FHFA counsel of record. First, whether a proceeding should be open to the public or a document should be filed under seal is vested exclusively in the agency by the statutory authority reserved to the Director to determine if disclosure would be contrary to the public interest. Therefore, to file a document under seal, FHFA counsel of record must make a written determination that disclosure of the document would be contrary to the public interest; at the same time the presiding officer is authorized to issue orders or close hearings in whole or in part to ensure the confidentiality of the material is preserved. Thus, the proposed rule would have entrusted to the presiding officer the responsibility to maintain the confidentiality of information. These standards are consistent with due process and the Uniform Rules. Furthermore, all parties' rights to protect confidential information are preserved because any party to a proceeding may request confidential treatment of information, such as personal financial information, in the form of a protective order.

Second, the standards set forth in Subpart D governing representational conduct before the agency are to promote the expeditious, fair resolution of adjudications or matters defined as ''practice before FHFA,'' including enforcement proceedings. FHFA counsel of record appearing before the presiding officer in an enforcement proceeding would of course be subject to these requirements. In addition, FHFA employees are held to standards of conduct and ethical requirements that are set forth and redressed under Title 5 of the United States Code. The procedures in subpart C of the proposed rule would not govern such matters. Notwithstanding the express authority of the presiding officer to take remedial action or sanction a party or representative for prohibited acts in a proceeding, the overall authority of the presiding officer and Director to take action or impose restrictions or sanctions authorized under applicable statute or regulations is preserved by § 1209.74(c)(4).

Investigative Subpoenas

One commenter asked for clarification on whether the proposed rule is intended to govern investigatory subpoenas. The commenter attributed the confusion, in part, to the fact that 12 U.S.C. 4641 contains authority for the issuance of subpoenas in examinations and investigations, in addition to adjudications. To be clear, 12 U.S.C. 4641 is included in the citation as support for the rule because it contains the authority for adjudicative subpoenas; there was no intention to suggest the proposed rule for enforcement proceedings would apply to investigations or examinations. The commenter posited that the proposed

rule would not apply to examinations or investigations because: (1) FHFA has authority to issue (only) two types of subpoenas, investigative and adjudicatory; and (2) routine examinations generally would not involve the issuance of subpoenas, and if the subpoena authority is exercised ''it is commonly called a formal investigation.'' FHFA has considered these comments, and notes that express examination subpoena power is established by the HERA amendments in 12 U.S.C. 4641. In addition, FHFA agrees with the conclusion that the proposed rule does not establish a process for formal investigations, and thus further clarification would be unnecessary. Finally, by law, FHFA as conservator or receiver may issue subpoenas pursuant to 12 U.S.C. 4617(b)(2)(I). Therefore, FHFA has determined that no changes to the proposed rule are required.

Judicial Enforcement of Administrative Subpoenas

One commenter recommended removal of the last sentence in the provision that governs discovery of parties, § 1209.30(h)(2), which states that the jurisdiction of district courts to enforce administrative subpoenas is as provided by 12 U.S.C. 4641(c)(2). Specifically, the proposed rule would have added a new sentence citing the limitations on district court jurisdiction that are found in 12 U.S.C. 4635(b), to underscore that a district court when called upon to enforce an administrative subpoena does not obtain subject matter jurisdiction over the administrative enforcement action.[11] In sum, the statute makes express that the district court's jurisdiction is limited to determining whether the subpoena is legally enforceable and to order compliance. But because no corollary sentence was added to the section on discovery of nonparties in § 1209.31, FHFA has deleted the last sentence in § 1209.30(h)(2) from the final rule to avoid any potential for confusion.

Sanctions

One commenter objected that the proposed rule would permit dissimilar treatment of agency counsel for prohibited conduct and requested that agency counsel should be expressly barred from engaging in *ex parte* communications and from conferring with decisional staff on settlement offers. Additionally, the commenter recommended that the presiding officer should have express authority under the subpart D provisions to sanction agency counsel for prohibited conduct. *Ex parte* communications are prohibited in § 1209.14 of the proposed rule. The commenter objected that the proposed rule fails to act as a deterrent to both parties, because it does not expressly subject agency counsel to the sanctions applicable to prohibited communications.

Contrary to the commenter's assertion, the rule anticipates that agency counsel would refrain from improper conduct and *ex parte* communications with the presiding officer. Any party or representative appearing in an administrative enforcement hearing, including FHFA counsel of record, is subject to the bar on *ex parte* communications and the corresponding authority of the presiding officer. Nevertheless, the rule does allow for the agency head to be briefed on matters that may relate to settlement issues and complex supervisory or regulatory matters by those employees who best know the subject matter, even if the subject matter bears on the proceeding. FHFA does not agree that, in such situations FHFA counsel of record should be so prohibited and subject to disciplinary action. Where the Director must rely on the expertise of agency staff, the Director should not be denied advice of counsel. For these reasons, FHFA declines to revise the final rule.

Trade Secrets Act Reminder

One commenter remarked that more protections for confidential information should be afforded where discovery requests often may seek the production of confidential financial or other proprietary materials from parties and nonparties. The commenter notes that the Trade Secrets Act prohibits Federal employees from divulging trade secrets obtained in the course of their Federal employment, and notwithstanding the precautions taken by FHFA employees, the rule should contain a reminder of these prohibitions. Neither the Uniform Rules nor the current respective agency Rules of Practice and Procedure include a reference to the Trade Secrets Act. Several factors dictate against adding a specific reference to the Trade Secrets Act in the final rule.

First, the Trade Secrets Act prohibits officers and employees of Federal agencies from publishing or disclosing trade secrets and other confidential business information ''to any extent not authorized by law.'' This prohibition on the public disclosure of trade secrets material unquestionably applies to FHFA employees. Following a 1992 amendment, the Trade Secrets Act also applied to ''any person acting on behalf the Office of Federal Housing Enterprise Oversight.'' (*See* Public Law 102–550, Title. XIII, § 1353, 106 Stat. at 3970). Thereafter, section 1161(d) of HERA substituted FHFA for OFHEO in this provision. Thus, FHFA's employees, contractors and agents are subject to criminal penalties for the unauthorized public disclosure of trade secrets material.

Second, existing regulations govern the disclosure of confidential or proprietary information, even where the Trade Secrets Act would not bar disclosure. *See* 12 CFR part 1703. In short, the regulations currently in effect prohibit agency employees from disclosing or permitting the disclosure of unpublished FHFA information absent authorization of the Director. Any person or entity that releases, discloses, or uses any unpublished information, except as expressly authorized, may be subject to the penalties provided in 18 U.S.C. 641 and other applicable laws. A current FHFA employee also may be subject to administrative or disciplinary proceedings under existing OFHEO and Finance Board regulations that remain in effect until FHFA issues a comprehensive regulation.

Third, apart from the Trade Secrets Act and FHFA's information disclosure regulation(s), there are provisions in the Rules of Practice and Procedure sufficient to ensure that sensitive, confidential materials will not be inadvertently disclosed in the course of an enforcement hearing. The rule as proposed includes these safeguards for the protection of confidential financial and trade secrets information. For example, a party (or non-party) who provides discovery materials that are considered confidential may apply for a protective order to preserve the confidentiality of the information. In addition, FHFA counsel of record may file or require the filing of a document under seal if he or she provides a written determination that disclosure of the document or portion of the document would be contrary to the public interest in accordance with § 1209.12(c) of the proposed rule. Moreover, a respondent may move for a closed hearing under § 1209.12(b); the presiding officer then forwards a recommended decision to the Director

[11] 12 U.S.C. 4635(b) provides in pertinent part: ''Except as otherwise provided in this subchapter and sections 4619 and 4623 of this title, no court shall have jurisdiction to affect, by injunction or otherwise, the issuance or enforcement of any notice or order under section 4631, 4632, 4513b, 4636 or 4637 of this title, or subchapter II of this chapter, or to review, modify, suspend, terminate, or set aside any such notice or order.'' Public Law 102–550, Title XIII, § 1375, Oct. 28, 1992, 106 Stat. 3990; Public Law 110–289, Div. A, Title I, § 1154, 122 Stat. 2775, July 30, 2008.

for his determination. And, the proceeding itself may be closed to entertain the introduction of sealed materials under § 1209.12(c). FHFA finds that there are sufficient safeguards in the rule for the protection of materials characterized as trade secrets.

Finally, the Safety and Soundness Act authorizes the Director to make disclosures that are, in his or her exclusive discretion, in the best interest of the public. For example, the Director has the authority to determine that information sharing with other Federal agencies is appropriate where it is necessary for the performance of official duties, and to determine when it is in the public interest to make information public. Therefore, FHFA concludes that it is not necessary to add a specific reference to the Trade Secrets Act in the final rule.

Specific Provisions

The commenters also raised points relating to specific provisions of the proposed rule. To the extent that FHFA either adopts revisions in the final rule in response to those comments or declines to adopt comments on the proposed rule, those matters are addressed below as part of the discussion of those sections in the final rule. Sections of the proposed rule that raised no issues or received no comments are to be adopted in the final rule as proposed.

III. Final Rule

A. General

The proposed rule would have adopted many provisions of the Finance Board's and OFHEO's enforcement rules, which are nearly identical procedurally, without substantive changes, to be codified in a new part 1209 that would supersede the existing OFHEO and Finance Board Rules of Practice and Procedure. In the final rule, FHFA is adopting most of those provisions of the proposed rule without any further substantive changes. Thus, most of the provisions of the final rule that are located in Subpart A (Scope and Authority), Subpart B (Enforcement Proceedings under sections 1371 through 1379D of the Safety and Soundness Act), Subpart C (Rules of Practice and Procedure), Subpart D (Parties and Representational Practice before the Federal Housing Finance Agency; Standards of Conduct), Subpart E (Civil Money Penalty Inflation Adjustments), and Subpart F (Suspension or Removal of Entity-Affiliated Party Charged with Felony), are unchanged from the proposed rule. Described separately below are all instances where FHFA adopts or declines to adopt revisions in response to comments on specific sections in the proposed rule.

B. Subpart A—Scope and Authority

Section 1209.3—Definitions

The proposed rule would have carried over into § 1209.3, without substantive edits, nearly all of the existing definitions from the OFHEO and Finance Board regulations that are applicable to regulations in this part, but would have revised certain definitions and added a number of new definitions to implement the statutory amendments or provide greater clarity. Except as described below, the final rule adopts the definitions from the proposed rule without further change.

The proposed rule included a new definition of ''associated with the regulated entity,'' to address the HERA amendments in section 1379 of the Safety and Soundness Act that established a six-year ''look-back'' period and expanded the scope of the parties subject to FHFA enforcement jurisdiction. (*See* 12 U.S.C. 4637). In particular, the law provides that the Director may issue a notice and proceed ''against any such entity-affiliated party, if such notice is served before the end of the six-year period beginning on the date such entity-affiliated party ceases to be associated with the regulated entity.'' *See id.* The proposed rule would have included a definition of ''associated with the regulated entity'' to provide descriptive guidance as to the type of activities meant by the phrase ''associated with.'' One commenter opined that ''associated with the regulated entity'' appears to be broader than ''entity-affiliated party,'' and does not appear elsewhere in the proposed rule. That commenter suggested that the six-year period should begin ''on the date such entity-affiliated party would no longer be deemed to be an entity-affiliated party.''

FHFA disagrees with this suggestion. First, section 1379 of the Safety and Soundness Act statute was amended precisely for that reason—to hold a wider class of persons accountable for their actions under the Safety and Soundness Act. Under HERA, the revised provision reads: ''The resignation, termination of employment or participation, or separation of an entity-affiliated party,'' whereas prior to HERA it read: ''Director or executive officer of an enterprise.'' Second, the suggested language falls short of setting a hard deadline. Because it is too subjective, it may actually extend the reach of the look-back further than Congress intended. Third, by conflating ''entity-affiliated party'' with ''associated with,'' the provision would read: When an entity-affiliated party ceases to be an entity-affiliated party. Such a reading would strip the phrase of any logical meaning and dilute the prerequisite. Therefore, the final rule adopts the definition as proposed.

C. Subpart B–Enforcement Proceedings Under Sections 1371 Through 1379D of the Safety and Soundness Act

Section 1209.4—Scope and Authority

This section states the authority for administrative enforcement proceedings in accordance with sections 1371 through 1379D of the Safety and Soundness Act (12 U.S.C. 4631 through 4641), which under section 1373 of the Safety and Soundness Act (12 U.S.C. 4633) must be held on the record, as follows: (1) Cease and desist and temporary cease and desist proceedings under sections 1371 through 1372 of the Safety and Soundness Act (12 U.S.C. 4631 through 4633); (2) civil money penalty assessment proceedings under section 1376 of the Safety and Soundness Act (12 U.S.C. 4636); and (3) the removal and prohibition proceedings under section 1377 of the Safety and Soundness Act (12 U.S.C. 4636a) (except proceedings under section 1377(h) of the Safety and Soundness Act for the suspension or removal of an entity-affiliated party charged with a felony (12 U.S.C. 4636a(h)).

Additionally, it reiterates that, pursuant to sections 1336(c) and 1371(a)(2) of the Safety and Soundness Act (12 U.S.C. 4566(c) and 12 U.S.C. 4631(a)(2)), actions to enforce housing goals must proceed under sections 1341 and 1345 of the Safety and Soundness Act. *See* 12 U.S.C. 4581, 4585.[12] It is necessary to make this distinction clear because the grounds for initiating cease and desist proceedings relative to housing goals under 12 U.S.C. 4581 differ from the cease and desist powers under 12 U.S.C. 4631. Similarly, the civil money penalties for housing goals violations differ from the civil money penalty provisions in 12 U.S.C. 4636. *See* 12 U.S.C. 4585. The process for

[12] Section 1371(a)(2) of the Safety and Soundness Act (12 U.S.C. 4631(a)(2)) states in pertinent part that the Director may not proceed under that section to ''enforce compliance with any housing goal established under [sections 1331 through 1348 of the Safety and Soundness Act], with section 1336 or 1337 of this title, with subsection (m) or (n) of section 309 [of Fannie Mae's authorizing statute] (12 U.S.C. 1723a(m), (n)), with subsection (e) or (f) of section 307 [of Freddie Mac's authorizing statute] (12 U.S.C. 1456(e), (f)), or with paragraph (5) of section 10(j) of the Federal Home Loan Bank Act (12 U.S.C. 1430(j))..''

conducting housing goals enforcement actions, however, is indistinguishable—a notice of charges is served and a hearing is conducted on the record. *See* 12 U.S.C. 4582(a)(1)). For that reason, the formal hearing procedures set out in subpart C of part 1209 as proposed are well-suited to govern housing goals enforcement proceedings. One commenter offered that combining the hearing procedures appeared sensible. FHFA has concluded that promoting use of the subpart C procedures for housing goals enforcement proceedings supports both an economies of scale approach to regulation, and provides certainty with respect to the process. Therefore, the provision is to be adopted in final as proposed.

Section 1209.5—Cease and Desist Proceedings

Section 1209.5 of the proposed rule closely followed the requirements of section 1371 of the Safety and Soundness Act (12 U.S.C. 4631). That statutory provision, as amended by section 1151 of HERA, sets out the authority and establishes several requirements for cease and desist enforcement proceedings. In the final rule, FHFA has retained the language of the proposed rule regarding the general requirements, but has also made certain revisions in response to the comments. In particular, § 1209.5(a)(1)(i) in the final rule has been edited to state more specifically the requisite conditions of section 1371(a)(1) of the Safety and Soundness Act (12 U.S.C. 4631(a)(1)). Additionally, § 1209.5(a)(i) has been edited lightly to underscore that the cease and desist/civil money penalty provisions set out in sections 1371 and 1376 of the Safety and Soundness Act (12 U.S.C. 4631, 4636) are not to be applied to the enforcement of housing goals. Also in response to a comment, § 1209.5(a)(2) in the final rule has been revised to state more expressly the discretion and authority of the Director to deem a regulated entity to be engaging in an unsafe or unsound practice on the basis of a less than satisfactory rating in its most recent report of examination with respect to asset quality, management, earnings, or liquidity, where the Director finds that the deficiency has not been corrected.

Section 1209.5 of the proposed rule summarizes the statutory cease and desist authority under section 1371 of the Safety and Soundness Act (12 U.S.C. 4631), which provides in section 1371(f) of the Safety and Soundness Act (12 U.S.C. 4631(f)) that a cease and desist order shall remain effective and enforceable as provided in the order, except to the extent that the order is stayed, modified, terminated, or set aside by the Director or otherwise as provided under the Safety and Soundness Act. One commenter recommended revising § 1209.5 of the proposed rule to include a reference to the availability of judicial review to make it consistent with §§ 1209.6(d) and 1209.7(d) in the proposed rule. This suggestion, which is misplaced in one respect, has merit for another reason: To reinforce that section 1374 of the Safety and Soundness Act (12 U.S.C. 4634) governs judicial review of a final cease and desist order. Section 1209.5 of the final rule is being revised to add a new paragraph (d)(2), to state that judicial review is governed by section 1374 of the Safety and Soundness Act (12 U.S.C. 4634), as provided for in section 1371(f) of the Safety and Soundness Act (12 U.S.C. 4631(f)).

FHFA notes that this revision to § 1209.5(d) of the final rule is not made for the purpose of consistency with § 1209.6(d) of the rule, as the commenter posited. In fact, § 1209.6(d) refers to an entirely different judicial authority: The authority of a district court to issue an injunction to set aside, limit, or suspend the enforcement of a temporary cease and desist order pending the completion of administrative proceedings on a notice of charges under section 1372(d) of the Safety and Soundness Act (12 U.S.C. 4632(d)). Section 1376(c)(3) of the Safety and Soundness Act (12 U.S.C. 4636(c)(3)) makes clear that a district court does not have jurisdiction to review a final order imposing a civil money penalty: The order of the Director imposing a penalty under this section shall not be subject to review, except as provided in section 1374 of the Safety and Soundness Act (12 U.S.C. 4634), which vests exclusive jurisdiction in the United States Court of Appeals for the District of Columbia to review any final order issued under sections 1313B, 1371, 1376, or 1377 of the Safety and Soundness Act (12 U.S.C. 4513b, 4631, 4636, 4636a). In fact, section 1376(d) of the Safety and Soundness Act expressly bars a district court from putting at issue the validity and appropriateness of a civil money penalty order in an action under this subsection to enforce a civil money penalty by obtaining a monetary judgment in district court. *See* 12 U.S.C. 4636(d).

For additional clarity, minor edits also have been made to §§ 1209.55(c), 1209.56, and 1209.57 in the final rule to underscore the authority of the Director to modify, terminate, or set aside an order as provided by section 1373(b)(2) of the Safety and Soundness Act (12 U.S.C. 4633(b)(2)), to require a party to exhaust administrative remedies as a precondition to judicial review of any final decision and order, and to state that judicial review of a final order is available in accordance with section 1374 of the Safety and Soundness Act (12 U.S.C. 4634).

Section 1209.6—Temporary Cease and Desist Orders

Section 1209.6 of the proposed rule implements section 1372(a) of the Safety and Soundness Act (12 U.S.C. 4632(a)) governing the issuance of a temporary cease and desist order. Section 1372(a) provides that, in connection with a notice of charges served under section 1371(a) or (b) of the Safety and Soundness Act, if the Director determines that the actions specified in the notice of charges served upon a regulated entity or any entity-affiliated party, or the continuation thereof, are likely to cause insolvency or significant dissipation of assets or earnings of that entity, or to weaken the condition of that entity prior to the completion of the proceedings conducted pursuant to sections 1371 and 1373 of the Safety and Soundness Act (12 U.S.C. 4631, 4633), the Director may issue a temporary order requiring the regulated entity or entity-affiliated party to cease and desist from any such violation or practice, and take affirmative action to prevent or remedy such insolvency, dissipation, condition, or prejudice pending completion of the cease and desist proceedings.

One commenter suggested that §§ 1209.6 and 1209.7 of the proposed rule should ''specify that the notice of charges in a civil money penalty proceeding must conform with § 1209.23,'' and incorporate parallels to §§ 1209.5(a)(1) and 1209.8(a)(1). FHFA agrees that a notice in a civil money penalty action must provide the same type of information as required of a notice of charges. Accordingly, § 1209.7 will be revised in the final rule to specify that the notice in a civil money penalty action must provide the same information as required of a notice of charges and conform to the requirements of § 1209.23. No changes to § 1209.6 are contemplated because the operative notice of charges in a temporary cease and desist proceeding would be subject to § 1209.5, which, as stated, requires conformity with the requirements of § 1209.23.

Section 1209.7—Civil Money Penalties

Section 1209.7 of the proposed rule implemented the provisions of section 1376 of the Safety and Soundness Act that govern civil money penalty

enforcement proceedings under the Safety and Soundness Act. *See* 12 U.S.C. 4636(a). For the commencement of such proceedings section 1376(c) of the Safety and Soundness Act requires the Director to establish standards and procedures that, among other things, provide for the Director to notify the regulated entity or entity-affiliated party in writing of the Director's determination to impose a penalty. A hearing on the record under section 1373 of the Safety and Soundness Act is required. One commenter suggested that the proposed rule should be revised to specify that the notice should comply with the requirements of § 1209.23 of the proposed rule that dictates the content of a notice of charges in order to bring the civil money penalty notice in parallel with a notice of charges issued under the cease and desist or a notice issued under the removal and prohibition provisions.

The suggestion has merit. Like a notice of charges issued under section 1371(c)(1) of the Safety and Soundness Act (12 U.S.C. 4631(c)(1)), or a notice of intention to remove or suspend a party under section 1377(c)(1) of the Safety and Soundness Act (12 U.S.C. 4636a(a)), a notice of intent to impose a civil money penalty under section 1376 of the Safety and Soundness Act (12 U.S.C. 4636) should contain a statement of facts constituting grounds for such an action, and fix a time and place for the hearing. Under applicable law, each of these pleadings must give sufficient notice of the facts and authority underlying the respective proceeding, and § 1209.23 was drafted with that premise in mind. Therefore, FHFA has determined to edit § 1209.7(a)(1) in the final rule to require that such notices shall conform to § 1209.23.

One commenter noted that § 1209.7(a)(2) of the proposed rule omits a reference to the daily penalty cap. The proposed rule cited to but did not recite the statutory authority for Tier I violations that includes that reference. FHFA agrees that for the sake of clarity § 1209.7(a)(2) in the final rule should be revised to include that reference.

Section 1209.8—Removal and Suspension Proceedings

The statutory authority and requirements for removal and suspension enforcement proceedings are set forth in section 1377 of the Safety and Soundness Act (12 U.S.C. 4636a). The removal or suspension of an entity-affiliated party, or the officers, directors, or management of the Office of Finance, a joint office of the Banks— where the requisite conditions are met—is initiated by service of a notice, and a hearing on the record is held to determine whether the grounds are satisfied, as provided by section 1373(a)(1) of the Safety and Soundness Act (12 U.S.C. 4633(a)(1)). In particular, section 1377(a)(1) of the Safety and Soundness Act authorized the Director to serve upon a party described in paragraph (a)(2) of the section, or any officer, director, or management of the Office of Finance, written notice of the intention of the Director to suspend or remove such party from office, or prohibit any further participation by such party, in any manner, in the conduct of the affairs of a regulated entity. *See* 12 U.S.C. 4636a(a)(1).

Section 1209.8(a)(1) of the proposed rule was drafted to implement 12 U.S.C. 4636a(a)(1). One commenter noted that §§ 1209.8(a)(1) and (c)(1) may present confusing redundancies by repeating the requirement for notices to conform to § 1209.23. To avoid any potential confusion FHFA has determined to remove the reference to § 1209.23 from § 1209.8(a)(1) in the final rule. Section 1209.8(c)(1) will be adopted in the final rule as proposed.

Section 1209.8(b) of the proposed rule was drafted to implement section 1377(b) of the Safety and Soundness Act (12 U.S.C. 4636a(b)). Section 1377(b)(2)(B) of the Safety and Soundness Act (12 U.S.C. 4636a(b)(2)(B)) provides that unless stayed by a court under paragraph (g) of section 1377 of the Safety and Soundness Act (12 U.S.C. 4636a(g)), any suspension order issued under paragraph (b) shall remain in effect and enforceable until the Director dismisses the charges set out in the notice served under paragraph (a)(1) of this section or the effective date of the order issued under paragraph (b) [sic].[13] This is a drafting error in the statute; the reference should be to paragraph (c) of section 1377. *See* 12 U.S.C. 4636a(b)(2)(B)(ii)).

Noting this technical error, one commenter posited that § 1209.8 of the proposed rule, which refers to the applicable provision, ''leaves unclear the distinction between an immediate suspension/prohibition order issued pursuant to § 1209.8(b) and a final suspension/prohibition order issued pursuant to § 1209.8(c).'' To give the statute logical meaning the commenter would make an explicit reference to paragraph (c) in § 1209.8(b)(2) of the final rule to specify ''that the effective period of a suspension order issued under § 1209.8(b) commences upon service and unless a court issues a stay, remains effective until the Director either dismisses the charges, or pursuant to § 1209.8(c), the Director issues a final order.'' FHFA agrees that the intent of the law is that an order issued under section 1377(b) of the Safety and Soundness Act (12 U.S.C. 4636a(b)) is effective immediately upon service and, absent a court-ordered stay, remains in effect and enforceable until the Director dismisses the charges or the effective date of an order issued under section 1377(c) of the Safety and Soundness Act. *See* 12 U.S.C. 4636a(b)(2). Accordingly, to more specifically convey the intent of the law, § 1209.8(b)(2) (effective period) in the final rule has been revised to that effect.

Section 1209.8(d)(3) of the proposed rule was written to implement the provisions of section 1377(e) of the Safety and Soundness Act (12 U.S.C. 4636a(e)) that impose industry-wide restrictions on anyone who has been removed or suspended from office (or barred from participating in the affairs of a regulated entity or the Office of Finance), absent the written consent of the Director in accordance with section 1377(e)(2) of the Safety and Soundness Act (12 U.S.C. 4636a(e)(2)). Such consent is committed to the discretion of the Director by law. The provision is silent on any process or procedures for obtaining that written consent, other than to require that the consent be publicly disclosed.

One commenter suggested that § 1209.8(d)(3)(ii) of the proposed rule was inadvertent in stating that the Director's refusal to consent shall not be a final agency action, because that effectively would bar access to judicial review. In truth, the draft rule provision is not a mistake, and FHFA disagrees with the premise of the commenter's suggestion because there is no provision for judicial review. Section 1377(e) of the Safety and Soundness Act (12 U.S.C. 4636a(e)) does not provide for judicial review of the Director's decision whether to permit a person subject to a removal or suspension order to continue, resume, or undertake participation in the affairs of a regulated entity or the Office of Finance. In fact, section 1377 of the Safety and Soundness Act provides only two judicial remedies. First, for orders issued under section 1377(b) of the Safety and Soundness Act, the subject may pursue a stay of the order through an action in district court under section 1377(g) of the Safety and Soundness Act (12 U.S.C. 4636a(b), (g)). Second, a final suspension/removal/prohibition order issued under section 1377(c) of the Safety and Soundness Act (12 U.S.C.

[13] The reference should be to section 1377(c) of the Safety and Soundness Act (12 U.S.C. 4636a(c)), which concerns final orders.

4636a(c)) is subject to judicial review in the court of appeals in accordance with section 1374 of the Safety and Soundness Act (12 U.S.C. 4634). Third, the public purpose of the industry-wide prohibition set out in section 1377(e)(1) of the Safety and Soundness Act (12 U.S.C. 4636a(e)(1)), taken together with the prohibitions on certain specified activities in section 1377(d) of the Safety and Soundness Act (12 U.S.C. 4636a(d)), must be given weight. Fourth, the decision whether to permit an entity-affiliated party to participate in the affairs of a regulated entity or the Office of Finance is committed to the discretion of the Director by law. Fifth, under the general precepts of statutory construction, where a provision (such as the right of judicial review) is included in one portion of an act, but excluded in other sections, implying a legislative intent to include the missing provision where it is omitted is unsupported.[14]

Moreover, in the context of a final order under section 1377(c) of the Safety and Soundness Act (12 U.S.C. 4636a(c)), where a court of appeals has already ruled on the appropriateness of a final order, the subject should not then be permitted to seek district court review of the Director's refusal to consent to the subject's proposed participation in a regulated entity or the Office of Finance. The statute includes no such provision of jurisdiction, and to read in such a right potentially would allow a subject to circumvent a final order. As stated, district court jurisdiction is limited by section 1377(g) of the Safety and Soundness Act (12 U.S.C. 4636a(g)) to ordering a stay of a suspension or prohibition order pending the completion of an administrative hearing under section 1377(c) of the Safety and Soundness Act (12 U.S.C. 4636a(c)). Finally, to upend the finality of a final order issued under section 1377(c) of the Safety and Soundness Act (12 U.S.C. 4636a(c)), that was affirmed by the appellate court, would run contrary to the statutory intent to let the Director exercise his advanced knowledge of the Enterprises, the Banks, and the Office of Finance to determine what is in the best interests of these entities. Therefore, having considered the issues, FHFA declines to remove the word ''not'' from § 1209.8(d)(3)(ii) in the final rule as was suggested by the commenter.

[14] *See generally,* Singer, N., Statutes and Statutory Construction (Sixth Ed.), § 67:9.

D. Subpart C—Rules of Practice and Procedure for Hearings on the Record

Section 1209.11—Authority of the Presiding Officer

This section states that hearings are to be held in accordance with the APA, and provides that the presiding officer is to have complete charge of the proceedings, to act in a fair and impartial manner, and to ensure that a full and complete record of the proceeding is made. The powers of the presiding officer to control proceedings are specified. Several commenters noted that § 1209.11(b)(11) of the proposed rule provides that the presiding officer may receive ''materially relevant'' evidence, and characterized this as a stricter evidentiary standard than is provided for in the Uniform Rules. One commenter suggested that this could create uncertainty and disparity in the administrative process, ultimately resulting in unnecessary judicial review of the standard.

In fact, to ensure that the record is complete and accurate, the presiding officer has broad authority under the proposed rule to take all lawful actions necessary to regulate the scope, timing, and completion of discovery of any non-privileged matter that is materially relevant to the charges or allowable defenses; rule upon the admissibility of evidence, and exclude or limit evidence; regulate the course of the testimonial phase of the hearing; examine witnesses; and, upon motion of a party, take judicial notice of a fact. (*See* § 1209.11(b)).

FHFA has considered the comment and concludes that it misconstrues the standard embodied in the Uniform Rules. Section 1209.11(b) of the proposed rule reflects the analogous provisions in the Uniform Rules; and, while it may be an extension of the standard, it does not create a disparity. For example, the Uniform Rules of the Federal Deposit Insurance Corporation (12 CFR part 308, Subpart A) (FDIC rule) provide that the powers of the administrative law judge include the power ''to receive relevant evidence * * *'' (12 CFR 308.5(b)(3)). And relevance is more specifically defined in the discovery rule governing relevance that limits discovery to ''any matter not privileged that has material relevance to the merits of the pending action.'' (12 CFR 308.25(a), (b)). The proposed rule would adopt the same standard. It is necessary and appropriate to expect that evidence have a logical connection to a consequential fact that tends to prove or disprove a matter in issue relative to the charges or allowable defenses in the pending action. This is to enable the presiding officer to ensure that the case is not sidetracked by unnecessary discovery, that discovery is focused on the salient issues, and that an accurate, thorough administrative record is timely created. Accordingly, FHFA declines to revise this provision in the final rule.

Section 1209.12—Public Hearings; Closed Hearings

Generally, appearance hearings are to be open to the public. But this section also reflects the authority of the Director, under section 1379B(b) of the Safety and Soundness Act (12 U.S.C. 4639(b)), to determine that holding an open hearing would be contrary to the public interest, and provides appropriate mechanisms for making and implementing such determinations. Section 1209.12(c) of the proposed rule reserves to FHFA counsel of record the authority to file documents under seal, or to require that a document be filed under seal, upon a written determination that the disclosure of the document would be contrary to the public interest. Furthermore, the presiding officer must preserve the confidentiality of the document and, if needed, issue a protective order that is acceptable to FHFA counsel of record. If a hearing is to be closed for the purpose of introducing testimony or documents filed under seal, certain procedures for handling confidential information are to be followed.

One commenter objected to this process arguing that the rule should provide authority to respondent's counsel to file documents under seal voluntarily to preserve a private (or public) need to protect filings from public disclosure. FHFA has considered the comment and determined that a respondent's right to protect confidential information is procedurally ensured because any party to a proceeding may request confidential treatment of information, such as personal financial information, in the form of a protective order. Therefore, FHFA has determined not to change the provision in the final rule.

One commenter mistakenly cited § 1209.12(d) in objecting to the requirement in § 1209.12(c) of the proposed rule that a protective order issued by the presiding officer to protect the confidentiality of sensitive information should be acceptable to FHFA counsel of record. FHFA sees no inconsistency in this requirement. The Agency has a vital interest in ensuring the confidentiality of sensitive commercial and financial information of the regulated entities. Respondent's counsel would find similar protections

available where a private hearing is authorized. Section 1209.12(b) of the proposed rule permits any party to request a private hearing; the determination is committed to the discretion of the Director, which is consistent with 12 U.S.C. 4639(b), (d). Having considered the issues, FHFA declines to revise § 1209.12(c) in the final rule.

Section 1209.14—Ex Parte Communications

This section defines and prohibits *ex parte* communications, and provides for procedures for dealing with such communications, including sanctions. This section also provides for the separation of functions of Agency personnel. Any employee or agent of FHFA who participated in the examination, investigative, or prosecutorial functions on the case may not participate in or advise in the recommended decision or the Director's decision on the final determination. One commenter objected that analysis of settlement offers and regulatory or supervisory matters are exempt from this prohibition. This reasonable carve out anticipates situations where FHFA counsel of record may be the staff possessed of the detailed knowledge of an issue that could be relied upon to provide context, content, and legal advice to the Director on a supervisory or regulatory matter, or the basis for appropriately resolving an enforcement action.

Section 1209.29—Discovery

Section 1209.29 of the rule provides that the presiding officer is charged with restricting discovery to any matter not privileged that is materially relevant to the charges or allowable defenses in a pending proceeding. One commenter objected to the standard and stated that it differs from the evidentiary standard in the Uniform Rules. The identical concern was raised with respect to § 1209.11(b) of the proposed rule. For the reasons stated in response to the comment on § 1209.11(b), FHFA has determined not to revise these provisions in the final rule. This evidentiary standard is in addition to other measures that are designed to assist the presiding officer in controlling the proceeding, such as a new meet and confer requirement in § 1209.29(a)(2) of the proposed rule that requires the parties to meet and confer in good faith and to submit a discovery plan to the presiding officer for his or her approval.

Discovery is limited to document requests; no other form of discovery is permitted. That is, with the exception of depositions to preserve testimony of a witness unavailable for a hearing (§ 1209.32 of the proposed rule), depositions are prohibited. And, § 1209.29(c) of the proposed rule reiterates that privileged documents are not discoverable. Applicable privileges include: Attorney client, work product, and privileges available to government agencies (*e.g.,* deliberative process; examination; investigative; or any other privileges available under the U.S. Constitution, Federal law, or the principles of Federal common law). To preserve such privileges in productions, a new provision, § 1209.29(d)(1)(ii) of the proposed rule, would have provided that the parties may enter into so-called ''claw back'' agreements, and that the presiding officer shall enter an order to ensure the enforceability of such agreements. One commenter suggested the provision be revised to permit the presiding officer to order claw back procedures where parties did not reach such an agreement prior to production. As proposed, however, the section allows any party to petition the presiding officer to issue claw back procedures, which should address the commenter's concern. FHFA has considered the issue and determined not to revise this section in the final rule.

Section 1209.30—Request for Document Discovery From Parties

This section in the proposed rule would have established the requirements for document discovery from parties, and stated that such discovery must be consistent with the discovery plan approved by the presiding officer under § 1209.29. Among other things, the proposed rule set deadlines for objections to discovery requests or assertion of privilege claims, and addressed the complexities and costs associated with the discovery of electronically-stored information (e-discovery) to encourage transparency and cooperation of the parties to avoid the costly issues commonly encountered in e-discovery.

Under § 1209.30(h) of the proposed rule, pertaining to the enforcement of a document discovery subpoena, the Director or a party who obtained the subpoena may seek enforcement to the extent authorized under section 1379D(c)(1) of the Safety and Soundness Act (12 U.S.C. 4641(c)(1)) by seeking an order from the appropriate United States district court. Section 1209.30(h)(2) of the proposed rule would have dedicated a sentence to state the limitations on a district court's jurisdiction under section 1375(b) of the Safety and Soundness Act (12 U.S.C. 4635(b)). A district court that is reviewing a subpoena does not obtain jurisdiction over the enforcement action itself, because section 1375(b) of the Safety and Soundness Act (12 U.S.C. 4635(b)) provides that a court may not affect by injunction or otherwise the issuance or enforcement of any effective and outstanding notice or order issued by the Director under sections 4513b, 4631, 4632, 4636, and 4637 of Title 12 of the United States Code. The same provision also bars a district court from enjoining or otherwise affecting the issuance or enforcement of an order issued under subchapter II of the Safety and Soundness Act (pertaining to required capital levels, special enforcement powers, and reviews of assets and liabilities), or otherwise to review, modify, suspend, terminate, or set aside any such effective and outstanding notice or order. That is, the jurisdiction of a district court charged with enforcing a subpoena (or declining to do so) would run only to the appropriateness of the subpoena.

Several commenters objected that that sentence in the proposed rule was misleading or overbroad in referring to ''subtitle C of the Safety and Soundness Act,'' and that the provision otherwise appeared to govern discovery of non-parties as well. To resolve any confusion, the commenter recommended that FHFA remove that sentence from § 1209.30(h)(2). In considering the comments, FHFA notes that the jurisdictional bar in section 1375(b) of the Safety and Soundness Act (12 U.S.C. 4635(b)) is set out as a matter of law. To avoid redundancy and foreclose any confusion, FHFA has removed the sentence from the final rule.

Section 1209.31—Document Discovery Subpoenas to Non-Parties

Section 1209.31 of the proposed rule governs document discovery subpoenas to non-parties. The proposed rule would adopt the existing rule with minor changes to headings and the addition of text requiring that the subpoenaing party seek only documents that are materially relevant to the charges and issues presented in the action, state its unequivocal intention to pay for document discovery of a non-party, and serve all other parties with the subpoena. The edits also make clear the discretion of the presiding officer to refuse to issue a subpoena to a non-party where the party's application for the subpoena does not set forth a valid basis of its issuance, or where the request is otherwise objectionable under § 1209.29(b).

One commenter suggested the evidentiary standard be revised to one

of ''general relevance.'' Here, again, the proposed rule specifies a materially relevant standard to keep the Rules of Practice and Procedure aligned with the material and relevant standard adopted by the Federal banking agencies in the Uniform Rules, and to mirror the generally accepted standards of materiality and relevance embodied in Federal law. This standard best takes into account the importance of a transparent discovery process in expeditiously resolving the issues presented by the claims and defenses in a case. FHFA rejects the suggestion that this standard differs from the Uniform Rules, and is issuing this provision in the final rule as proposed.

Section 1209.31(b) of the proposed rule governs motions to quash or modify a document subpoena, and adds a provision to allow a non-party to enter a limited appearance in the proceeding to challenge the subpoena directed to it. The non-party may raise the same types of objections that may be raised by a party under § 1209.30, and within the same time deadlines. The revised provision permits the party seeking the subpoena to respond to the non-party's objections within 10 days of service of a motion to quash or modify. Absent express leave of the presiding officer, no other party may respond to the non-party's motion. Additionally, the pending motion shall not operate as a stay on the proceeding or in any way limit the presiding officer's authority to impose sanctions on a party who induces another to fail to comply with a subpoena. No party may rely on the pendency of a motion to quash or modify to excuse performance of any action required of that party under this part.

One commenter argued that any party should be permitted to object to any subpoena to a non-party for the purpose of asserting that party's rights with respect to the subpoenaed materials, such as the confidentiality of commercial information. FHFA has considered the comment in the context of the overall discovery process and the discretion of the presiding officer to control the proceedings. Additionally, it should be noted that any party may seek a protective order. FHFA is of the view that the mechanisms in place sufficiently protect the rights of parties who may be concerned about the possible disclosure of sensitive or personal information. Therefore, FHFA has determined not to revise the provision in the final rule.

Finally, enforcement of document subpoenas to non-parties also is authorized pursuant to section 1379D(c) of the Safety and Soundness Act (12 U.S.C. 4641(c)). Section 1209.31(c)(2) of the proposed rule provides that there is no automatic stay in the event that a subpoena enforcement action is initiated. In an apparent misreading of the proposed rule, one commenter argued that the presiding officer should have discretion to order a stay. As in § 1209.30(h)(3) of the proposed rule, the provision would allow for a discretionary stay of the proceedings by the presiding officer or the Director for a reasonable period in the interests of the parties or justice. The presiding presumably will ensure that the stay does not interfere with the pace and independence of the enforcement proceeding. This is to ensure the agency process can go forward without delay due to discovery disputes so that the proceedings are not derailed and no hardships are imposed on the parties who seek a speedy adjudication. Therefore, FHFA has determined to promulgate the provision in the final rule as proposed.

E. Subpart D—Parties and Representational Practice Before the Federal Housing Finance Agency; Standards of Conduct

Section 1209.70—Scope

Subpart D of this part contains rules governing practice by parties or their representatives before FHFA in an adjudicatory proceeding and standards of conduct under this part and in any appearance before the Director or any agency representative. This subpart outlines the sanctions that may be prescribed by a presiding officer or the Director against parties or their representatives who fail to conform to the requirements and conduct guidelines; such representation includes, but is not limited to, the practice of attorneys and accountants.

This provision also states that employees of FHFA are not subject to disciplinary proceedings under this subpart, which is a carry-over from the existing enforcement regulations. One commenter mistakenly assumed from this provision that the presiding officer could not sanction agency counsel for violating the rules of practice, but should have discretion to do so. In fact, the presiding officer has exactly that discretionary authority. This provision underscores that employee disciplinary matters proceed under the applicable rules in Title 5 of the United States Code. Disciplinary matters are to be distinguished from conduct that violates the rules of practice for matters before the Director or the presiding officer. If FHFA counsel of record is found to have engaged in prohibited contumacious conduct in the course of an enforcement proceeding, FHFA is of the view that this subpart provides sufficient discretion and guidance for the presiding officer to deal with it, and is adopting the provision in the final rule as proposed. Moreover, this subpart should not be read to preclude the Director from taking any other action or imposing any restriction or sanction authorized by applicable law, rule, order or regulation.

F. Subpart F—Suspension or Removal of Entity-Affiliated Party Charged With Felony

Section 1209.102—Hearing on Removal or Suspension

Section 1209.102 of the proposed rule sets forth the requirements for an informal hearing on a removal or suspension under section 1377(h) of the Safety and Soundness Act (12 U.S.C. 4636a(h)), and the timing and procedural matters of such hearings. Because the Safety and Soundness Act does not require a formal APA-type full evidentiary hearing on the record, the process is less formal. Nevertheless, the procedure provides the requisite due process requirements of notice and opportunity to respond. This provision in the proposed rule specified the requirements as to form, timing, conduct, submissions, and the record of the hearing.

The proposed rule allowed that an entity-affiliated party could have elected in writing to waive his or her right to appear in person or through counsel to make a statement, and to have the matter determined solely on the basis of a written submission, thus obviating an appearance hearing. Additionally, as proposed, the rule provided that the Director or his designee would have the discretion to determine to deny, permit, or limit oral testimony in a hearing. The sole purpose of the informal hearing is to determine whether the suspension or prohibition will be continued, modified, or terminated, or whether an order removing such party or prohibiting the party from participation in the affairs of the regulated entity will be rescinded or modified.

One commenter argued that: (1) The presiding officer should not have the power to determine whether to admit or exclude witness testimony, and (2) the rule should require the creation of a hearing transcript. FHFA disagrees with these comments for the reason that the Director has the authority to make such a determination, and written submissions may constitute the full record in the absence of an appearance. In any case, the recommended decision

would reflect all materials or testimony and be transmitted to the Director, who makes the final determination. These steps are sufficient in the context of this process to adequately protect the parties. Therefore, to provide for the efficient operation of the rule, FHFA is not adopting the modifications suggested by the commenter.

IV. Paperwork Reduction Act

The Paperwork Reduction Act (44 U.S.C. 3501 *et seq.*) requires that regulations involving the collection of information receive clearance from OMB. This rule contains no such collection of information requiring OMB approval under the Paperwork Reduction Act. Consequently, no information has been submitted to OMB for review.

V. Regulatory Impact

Regulatory Flexibility Act

The Regulatory Flexibility Act (5 U.S.C. 601 *et seq.*) requires that a regulation that has a significant economic impact on a substantial number of small entities, small businesses, or small organizations must include an initial regulatory flexibility analysis describing the regulation's impact on small entities. Such an analysis need not be undertaken if the agency has certified that the regulation will not have a significant economic impact on a substantial number of small entities. 5 U.S.C. 605(b). FHFA has considered the impact of the proposed regulation under the Regulatory Flexibility Act. FHFA certifies that the final regulation is not likely to have a significant economic impact on a substantial number of small business entities because the regulation applies to the Enterprises and Banks, which are not small entities for purposes of the Regulatory Flexibility Act. 5 U.S.C. 605(b).

List of Subjects

12 CFR Part 908

Administrative practice and procedure, Federal home loan banks, Penalties.

12 CFR Part 1209

Administrative practice and procedure, Federal home loan banks.

12 CFR Part 1780

Administrative practice and procedure, Penalties.

Accordingly, for the reasons set forth in the preamble, under the authority of 12 U.S.C. 4513b and 4526, the Federal Housing Finance Agency amends chapters IX, XII, and XVII of Title 12, Code of Federal Regulations, as follows:

CHAPTER IX—FEDERAL HOUSING FINANCE BOARD

Subchapter B—Federal Housing Finance Board Organization and Operations

PART 908—[REMOVED]

■ 1. Remove part 908.

CHAPTER XII—FEDERAL HOUSING FINANCE AGENCY

Subchapter A–Organization and Operations

■ 2. Add part 1209 to subchapter A to read as follows:

PART 1209—RULES OF PRACTICE AND PROCEDURE

Subpart A—Scope and Authority

Sec.
1209.1 Scope.
1209.2 Rules of construction.
1209.3 Definitions.

Subpart B—Enforcement Proceedings Under Sections 1371 Through 1379D of the Safety and Soundness Act

1209.4 Scope and authority.
1209.5 Cease and desist proceedings.
1209.6 Temporary cease and desist orders.
1209.7 Civil money penalties.
1209.8 Removal and prohibition proceedings.
1209.9 Supervisory actions not affected.

Subpart C—Rules of Practice and Procedure

1209.10 Authority of the Director.
1209.11 Authority of the Presiding Officer.
1209.12 Public hearings; closed hearings.
1209.13 Good faith certification.
1209.14 Ex parte communications.
1209.15 Filing of papers.
1209.16 Service of papers.
1209.17 Time computations.
1209.18 Change of time limits.
1209.19 Witness fees and expenses.
1209.20 Opportunity for informal settlement.
1209.21 Conduct of examination.
1209.22 Collateral attacks on adjudicatory proceeding.
1209.23 Commencement of proceeding and contents of notice of charges.
1209.24 Answer.
1209.25 Amended pleadings.
1209.26 Failure to appear.
1209.27 Consolidation and severance of actions.
1209.28 Motions.
1209.29 Discovery.
1209.30 Request for document discovery from parties.
1209.31 Document discovery subpoenas to non-parties.
1209.32 Deposition of witness unavailable for hearing.
1209.33 Interlocutory review.
1209.34 Summary disposition.
1209.35 Partial summary disposition.
1209.36 Scheduling and pre-hearing conferences.
1209.37 Pre-hearing submissions.
1209.38 Hearing subpoenas.
1209.39–1209.49 [Reserved].
1209.50 Conduct of hearings.
1209.51 Evidence.
1209.52 Post-hearing filings.
1209.53 Recommended decision and filing of record.
1209.54 Exceptions to recommended decision.
1209.55 Review by Director.
1209.56 Exhaustion of administrative remedies.
1209.57 Judicial review; no automatic stay.
1209.58–1209.69 [Reserved].

Subpart D—Parties and Representational Practice Before the Federal Housing Finance Agency; Standards of Conduct

1209.70 Scope.
1209.71 Definitions.
1209.72 Appearance and practice in adjudicatory proceedings.
1209.73 Conflicts of interest.
1209.74 Sanctions.
1209.75 Censure, suspension, disbarment, and reinstatement.
1209.76–1209.79 [Reserved].

Subpart E—Civil Money Penalty Inflation Adjustments

1209.80 Inflation adjustments.
1209.81 Applicability.
1209.82–1209.99 [Reserved].

Subpart F—Suspension or Removal of an Entity-Affiliated Party Charged With Felony

1209.100 Scope.
1209.101 Suspension, removal, or prohibition.
1209.102 Hearing on removal or suspension.
1209.103 Recommended and final decisions.

Authority: 5 U.S.C. 554, 556, 557, and 701 *et seq.;* 12 U.S.C. 4501, 4503, 4511, 4513, 4513b, 4517, 4526, 4531, 4535, 4536, 4581, 4585, 4631–4641; and 28 U.S.C. 2461 note.

Subpart A—Scope and Authority

§ 1209.1 Scope.

(a) *Authority.* This part sets forth the Rules of Practice and Procedure for hearings on the record in administrative enforcement proceedings in accordance with the Federal Housing Enterprises Financial Safety and Soundness Act of 1992, Title XIII of the Housing and Community Development Act of 1992, Public Law 102–550, sections 1301 *et seq.,* codified at 12 U.S.C. 4501 *et seq.,* as amended (the ''Safety and Soundness Act''), as stated in § 1209.4 of this part.[1]

[1] As used in this part, the ''Safety and Soundness Act'' means the Federal Housing Enterprise Financial Safety and Soundness Act of 1992, as amended. *See* § 1209.3. The Safety and Soundness Act was amended by the Housing and Economic Recovery Act of 2008, Public Law No. 110–289, sections 1101 *et seq.,* 122 Stat. 2654 (July 30, 2008) (HERA). Specifically, sections 1151 through 1158 of HERA amended sections 1371 through 1379D of the Safety and Soundness Act, (codified at 12 U.S.C.

Continued

(b) *Enforcement Proceedings.* Subpart B of this part (Enforcement Proceedings Under sections 1371 through 1379D of the Safety and Soundness Act) sets forth the statutory authority for enforcement proceedings under sections 1371 through 1379D of the Safety and Soundness Act (12 U.S.C. 4631 through 4641) (Enforcement Proceedings).

(c) *Rules of Practice and Procedure.* Subpart C of this part (Rules of Practice and Procedure) prescribes the general rules of practice and procedure applicable to adjudicatory proceedings that the Director is required by statute to conduct on the record after opportunity for a hearing under the Administrative Procedure Act, 5 U.S.C. 554, 556, and 557, under the following statutory provisions:

(1) Enforcement proceedings under sections 1371 through 1379D of the Safety and Soundness Act, as amended (12 U.S.C. 4631 through 4641);

(2) Removal, prohibition, and civil money penalty proceedings for violations of post-employment restrictions imposed by applicable law; and

(3) Proceedings under section 102 of the Flood Disaster Protection Act of 1973, as amended (42 U.S.C. 4012a) to assess civil money penalties.

(d) *Representation and conduct.* Subpart D of this part (Parties and Representational Practice before the Federal Housing Finance Agency; Standards of Conduct) sets out the rules of representation and conduct that shall govern any appearance by any person, party, or representative of any person or party, before a presiding officer, the Director of FHFA, or a designated representative of the Director or FHFA staff, in any proceeding or matter pending before the Director.

(e) *Civil money penalty inflation adjustments.* Subpart E of this part (Civil Money Penalty Inflation Adjustments) sets out the requirements for the periodic adjustment of maximum civil money penalty amounts under the Federal Civil Penalties Inflation Adjustment Act of 1990, as amended (Inflation Adjustment Act) on a recurring four-year cycle.[2]

(f) *Informal proceedings.* Subpart F of this part (Suspension or Removal of an Entity-Affiliated Party Charged with Felony) sets out the scope and procedures for the suspension or removal of an entity-affiliated party charged with a felony under section 1377(h) of the Safety and Soundness Act (12 U.S.C. 4636a(h)), which provides for an informal hearing before the Director.

§ 1209.2 Rules of construction.

For purposes of this part:

(a) Any term in the singular includes the plural and the plural includes the singular, if such use would be appropriate;

(b) Any use of a masculine, feminine, or neuter gender encompasses all three, if such use would be appropriate; and

(c) Unless the context requires otherwise, a party's representative of record, if any, on behalf of that party, may take any action required to be taken by the party.

§ 1209.3 Definitions.

For purposes of this part, unless explicitly stated to the contrary:

Adjudicatory proceeding means a proceeding conducted pursuant to these rules, on the record, and leading to the formulation of a final order other than a regulation.

Agency has the meaning defined in section 1303(2) of the Safety and Soundness Act (12 U.S.C. 4502(2)).

Associated with the regulated entity means, for purposes of section 1379 of the Safety and Soundness Act (12 U.S.C. 4637), any direct or indirect involvement or participation in the conduct of operations or business affairs of a regulated entity, including engaging in activities related to the operations or management of, providing advice or services to, consulting or contracting with, serving as agent for, or in any other way affecting the operations or business affairs of a regulated entity—with or without regard to—any direct or indirect payment, promise to make payment, or receipt of any compensation or thing of value, such as money, notes, stock, stock options, or other securities, or other benefit or remuneration of any kind, by or on behalf of the regulated entity, except any payment made pursuant to a retirement plan or deferred compensation plan, which is determined by the Director to be permissible under section 1318(e) of the Safety and Soundness Act (12 U.S.C. 4518(e)), or by reason of the death or disability of the party, in the form and manner commonly paid or provided to retirees of the regulated entity, unless such payment, compensation, or such benefit is promised or provided to or for the benefit of said party for the provision of services or other benefit to the regulated entity.

Authorizing statutes has the meaning defined in section 1303(3) of the Safety and Soundness Act (12 U.S.C. 4502(3)).

Bank Act means the Federal Home Loan Bank Act, as amended (12 U.S.C. 1421 *et seq.*).

Board or Board of Directors means the board of directors of any Enterprise or Federal Home Loan Bank (Bank), as provided for in the respective authorizing statutes.

Decisional employee means any member of the Director's or the presiding officer's staff who has not engaged in an investigative or prosecutorial role in a proceeding and who may assist the Director or the presiding officer, respectively, in preparing orders, recommended decisions, decisions, and other documents under subpart C of this part.

Director has the meaning defined in section 1303(9) of the Safety and Soundness Act (12 U.S.C. 4502(9)); except, as the context requires in this part, ''director'' may refer to a member of the Board of Directors or any Board committee of an Enterprise, a Federal Home Loan Bank, or the Office of Finance.

Enterprise has the meaning defined in section 1303(10) of the Safety and Soundness Act (12 U.S.C. 4502(10)).

Entity-affiliated party has the meaning defined in section 1303(11) of the Safety and Soundness Act (12 U.S.C. 4502(11)), and may include an executive officer, any director, or management of the Office of Finance, as applicable under relevant provisions of the Safety and Soundness Act or FHFA regulations.

Executive officer has the meaning defined in section 1303(12) of the Safety and Soundness Act (12 U.S.C. 4502(12)), and may include an executive officer of the Office of Finance, as applicable under relevant provisions of the Safety and Soundness Act or FHFA regulations.

FHFA means the Federal Housing Finance Agency as defined in section 1303(2) of the Safety and Soundness Act (12 U.S.C. 4502(2)).

Notice of charges means the charging document served by FHFA to commence an enforcement proceeding under this part for the issuance of a cease and desist order; removal, suspension, or prohibition order; or an order to assess a civil money penalty, under 12 U.S.C. 4631 through 4641 and § 1209.23. A ''notice of charges,'' as used or referred to as such in this part, is not an ''effective notice'' under section 1375(a) of the Safety and Soundness Act (12 U.S.C. 4635(a)).

Office of Finance has the meaning defined in section 1303(19) of the Safety and Soundness Act (12 U.S.C. 4502(19)).

4631 through 4641) (hereafter, ''Enforcement Proceedings'').

[2] Public Law 101–410, 104 Stat. 890, as amended by the Debt Collection Improvement Act of 1996, Public Law 104–134, Title III, sec. 31001(s)(1), Apr. 26, 1996, 110 Stat. 1321–373; Public Law 105–362, Title XIII, sec. 1301(a), Nov. 10, 1998, 112 Stat. 3293 (28 U.S.C. 2461 note).

Party means any person named as a respondent in any notice of charges, or FHFA, as the context requires in this part.

Person means an individual, sole proprietor, partnership, corporation, unincorporated association, trust, joint venture, pool, syndicate, organization, regulated entity, entity-affiliated party, or other entity.

Presiding officer means an administrative law judge or any other person appointed by or at the request of the Director under applicable law to conduct an adjudicatory proceeding under this part.

Regulated entity has the meaning defined in section 1303(20) of the Safety and Soundness Act (12 U.S.C. 4502(20)).

Representative of record means an individual who is authorized to represent a person or is representing himself and who has filed a notice of appearance and otherwise has complied with the requirements under § 1209.72. FHFA's representative of record may be referred to as FHFA counsel of record, agency counsel or enforcement counsel.

Respondent means any party that is the subject of a notice of charges under this part.

Safety and Soundness Act means Title XIII of the Housing and Community Development Act of 1992, Public Law 102–550, known as the Federal Housing Enterprises Financial Safety and Soundness Act of 1992, as amended (12 U.S.C. 4501 *et seq.*)

Violation has the meaning defined in section 1303(25) of the Safety and Soundness Act (12 U.S.C. 4502(25)).

Subpart B—Enforcement Proceedings Under Sections 1371 Through 1379D of the Safety and Soundness Act

§ 1209.4 Scope and authority.

The rules of practice and procedure set forth in Subpart C (Rules of Practice and Procedure) of this part shall be applicable to any hearing on the record conducted by FHFA in accordance with sections 1371 through 1379D of the Safety and Soundness Act (12 U.S.C. 4631 through 4641), as follows:

(a) Cease-and-desist proceedings under sections 1371 and 1373 of the Safety and Soundness Act, (12 U.S.C. 4631, 4633);

(b) Civil money penalty assessment proceedings under sections 1373 and 1376 of the Safety and Soundness Act, (12 U.S.C. 4633, 4636); and

(c) Removal and prohibition proceedings under sections 1373 and 1377 of the Safety and Soundness Act, (12 U.S.C. 4633, 4636a), except removal proceedings under section 1377(h) of the Safety and Soundness Act, (12 U.S.C. 4636a(h)).

§ 1209.5 Cease and desist proceedings.

(a) *Cease and desist proceedings.*—(1) *Authority.*—(i) *In general.* As prescribed by section 1371(a) of the Safety and Soundness Act (12 U.S.C. 4631(a)), if in the opinion of the Director, a regulated entity or any entity-affiliated party is engaging or has engaged, or the Director has reasonable cause to believe that the regulated entity or any entity-affiliated party is about to engage, in an unsafe or unsound practice in conducting the business of the regulated entity or the Office of Finance, or is violating or has violated, or the Director has reasonable cause to believe is about to violate, a law, rule, regulation, or order, or any condition imposed in writing by the Director in connection with the granting of any application or other request by the regulated entity or the Office of Finance or any written agreement entered into with the Director, the Director may issue and serve upon the regulated entity or entity-affiliated party a notice of charges (as described in § 1209.23) to institute cease and desist proceedings, except with regard to the enforcement of any housing goal that must be addressed under sections 1341 and 1345 of the Safety and Soundness Act (12 U.S.C. 4581, 4585).

(ii) *Hearing on the record.* In accordance with section 1373 of the Safety and Soundness Act (12 U.S.C. 4633), a hearing on the record shall be held in the District of Columbia. Subpart C of this part shall govern the hearing procedures.

(iii) *Consent to order.* Unless the party served with a notice of charges shall appear at the hearing personally or through an authorized representative of record, the party shall be deemed to have consented to the issuance of the cease and desist order.

(2) *Unsatisfactory rating.* In accordance with section 1371(b) of the Safety and Soundness Act (12 U.S.C. 4631(b)), if a regulated entity receives, in its most recent report of examination, a less-than-satisfactory rating for asset quality, management, earnings, or liquidity, the Director may deem the regulated entity to be engaging in an unsafe or unsound practice within the meaning of section 1371(a) of the Safety and Soundness Act (12 U.S.C. 4631(a)), if any such deficiency has not been corrected.

(3) *Order.* As provided by section 1371(c)(2) of the Safety and Soundness Act (12 U.S.C. 4631(c)(2)), if the Director finds on the record made at a hearing in accordance with section 1373 of the Safety and Soundness Act (12 U.S.C. 4633) that any practice or violation specified in the notice of charges has been established (or the regulated entity or entity-affiliated party consents pursuant to section 1373(a)(4) of the Safety and Soundness Act (12 U.S.C. 4633(a)(4)), the Director may issue and serve upon the regulated entity, executive officer, director, or entity-affiliated party, an order (as set forth in § 1209.55) requiring such party to cease and desist from any such practice or violation and to take affirmative action to correct or remedy the conditions resulting from any such practice or violation.

(b) *Affirmative action to correct conditions resulting from violations or activities.* The authority to issue a cease and desist order or a temporary cease and desist order requiring a regulated entity, executive officer, director, or entity-affiliated party to take affirmative action to correct or remedy any condition resulting from any practice or violation with respect to which such cease and desist order or temporary cease and desist order is set forth in section 1371(a), (c)(2), and (d) of the Safety and Soundness Act (12 U.S.C. 4631(a), (c)(2), and (d)), and includes the authority to:

(1) Require the regulated entity or entity-affiliated party to make restitution, or to provide reimbursement, indemnification, or guarantee against loss, if—

(i) Such entity or party or finance facility was unjustly enriched in connection with such practice or violation, or

(ii) The violation or practice involved a reckless disregard for the law or any applicable regulations, or prior order of the Director;

(2) Require the regulated entity to seek restitution, or to obtain reimbursement, indemnification, or guarantee against loss; as

(3) Restrict asset or liability growth of the regulated entity;

(4) Require the regulated entity to obtain new capital;

(5) Require the regulated entity to dispose of any loan or asset involved;

(6) Require the regulated entity to rescind agreements or contracts;

(7) Require the regulated entity to employ qualified officers or employees (who may be subject to approval by the Director at the direction of the Director); and

(8) Require the regulated entity to take such other action, as the Director determines appropriate, including limiting activities.

(c) *Authority to limit activities.* As provided by section 1371(e) of the Safety and Soundness Act (12 U.S.C. 4631(e)), the authority of the Director to issue a cease and desist order under section 1371 of the Safety and

Soundness Act (12 U.S.C. 4631) or a temporary cease and desist order under section 1372 of the Safety and Soundness Act (12 U.S.C. 4632), includes the authority to place limitations on the activities or functions of the regulated entity or entity-affiliated party or any executive officer or director of the regulated entity or entity-affiliated party.

(d) *Effective date of order; judicial review.*—(*1) Effective date.* The effective date of an order is as set forth in section 1371(f) of the Safety and Soundness Act (12 U.S.C. 4631(f)).

(2) *Judicial review.* Judicial review is governed by section 1374 of the Safety and Soundness Act (12 U.S.C. 4634).

§ 1209.6 Temporary cease and desist orders.

(a) *Temporary cease and desist orders.*—(1) *Grounds for issuance.* The grounds for issuance of a temporary cease and desist order are set forth in section 1372(a) of the Safety and Soundness Act (12 U.S.C. 4632(a)). In accordance with section 1372(a) of the Safety and Soundness Act (12 U.S.C. 4632(a)), the Director may:

(i) Issue a temporary order requiring that regulated entity or entity-affiliated party to cease and desist from any violation or practice specified in the notice of charges; and

(ii) Require that regulated entity or entity-affiliated party to take affirmative action to prevent or remedy any insolvency, dissipation, condition, or prejudice, pending completion of the proceedings.

(2) *Additional requirements.* As provided by section 1372(a)(2) of the Safety and Soundness Act (12 U.S.C. 4632(a)(2)), an order issued under section 1372(a)(1) of the Safety and Soundness Act (12 U.S.C. 4632(a)(1)) may include any requirement authorized under section 1371(d) of the Safety and Soundness Act (12 U.S.C. 4631(d)).

(b) *Effective date of temporary order.* The effective date of a temporary order is as provided by section 1372(b) of the Safety and Soundness Act (12 U.S.C. 4632(b)). And, unless set aside, limited, or suspended by a court in proceedings pursuant to the judicial review provisions of section 1372(d) of the Safety and Soundness Act (12 U.S.C. 4632(d)), shall remain in effect and enforceable pending the completion of the proceedings pursuant to such notice of charges, and shall remain effective until the Director dismisses the charges specified in the notice or until superseded by a cease-and-desist order issued pursuant to section 1371 of the Safety and Soundness Act (12 U.S.C. 4631).

(c) *Incomplete or inaccurate records.*—(1) *Temporary order.* As provided by section 1372(c) of the Safety and Soundness Act (12 U.S.C. 4632(c)), if a notice of charges served under section 1371(a) or (b) of the Safety and Soundness Act (12 U.S.C. 4631(a), (b)), specifies on the basis of particular facts and circumstances that the books and records of the regulated entity served are so incomplete or inaccurate that the Director is unable, through the normal supervisory process, to determine the financial condition of the regulated entity or the details or the purpose of any transaction or transactions that may have a material effect on the financial condition of that regulated entity, the Director may issue a temporary order requiring:

(i) The cessation of any activity or practice that gave rise, whether in whole or in part, to the incomplete or inaccurate state of the books or records; or

(ii) Affirmative action to restore the books or records to a complete and accurate state.

(2) *Effective period.* Any temporary order issued under section 1372(c)(1) of the Safety and Soundness Act (12 U.S.C. 4632(c)(1)) shall become effective upon service, and remain in effect and enforceable unless set aside, limited, or suspended in accordance with section 1372(d) of the Safety and Soundness Act (12 U.S.C. 4632(d)), as provided by section 1372(c)(2) of the Safety and Soundness Act (12 U.S.C. 4632(c)(2)).

(d) *Judicial review.* Section 1372(d) of the Safety and Soundness Act (12 U.S.C. 4632(d)), authorizes a regulated entity, executive officer, director, or entity-affiliated party that has been served with a temporary order pursuant to section 1372(a) or (b) of the Safety and Soundness Act (12 U.S.C. 4632(a), (b)) to apply to the United States District Court for the District of Columbia within 10 days after service of the temporary order for an injunction setting aside, limiting, or suspending the enforcement, operation, or effectiveness of the temporary order, pending the completion of the administrative enforcement proceeding. The district court has jurisdiction to issue such injunction.

(e) *Enforcement of temporary order.* As provided by section 1372(e) of the Safety and Soundness Act (12 U.S.C. 4632(e)), in the case of any violation, threatened violation, or failure to obey a temporary order issued pursuant to this section, the Director may bring an action in the United States District Court for the District of Columbia for an injunction to enforce a temporary order, and the district court is to issue such injunction upon a finding made in accordance with section 1372(e) of the Safety and Soundness Act (12 U.S.C. 4632(e)).

§ 1209.7 Civil money penalties.

(a) *Civil money penalty proceedings.*—(1) *In general.* Section 1376 of the Safety and Soundness Act (12 U.S.C. 4636) governs the imposition of civil money penalties. Upon written notice, which shall conform to the requirements of § 1209.23 of this part, and a hearing on the record to be conducted in accordance with subpart C of this part, the Director may impose a civil money penalty on any regulated entity or any entity-affiliated party as provided by section 1376 of the Safety and Soundness Act for any violation, practice, or breach addressed under sections 1371, 1372, or 1376 of the Safety and Soundness Act (12 U.S.C. 4631, 4632, 4636), except with regard to the enforcement of housing goals that are addressed separately under sections 1341 and 1345 of the Safety and Soundness Act (12 U.S.C. 4581, 4585).

(2) *Amount of penalty.*—(i) *First Tier.* Section 1376(b)(1) of the Safety and Soundness Act (12 U.S.C. 4636(b)(1)) prescribes the civil penalty for violations as stated therein, in the amount of $10,000 for each day during which a violation continues.

(ii) *Second Tier.* Section 1376(b)(2) of the Safety and Soundness Act (12 U.S.C. 4636(b)(2)) provides that notwithstanding paragraph (b)(1) thereof, a regulated entity or entity-affiliated party shall forfeit and pay a civil penalty of not more than $50,000 for each day during which a violation, practice, or breach continues, if the regulated entity or entity-affiliated party commits any violation described in (b)(1) thereof, recklessly engages in an unsafe or unsound practice, or breaches any fiduciary duty, and the violation, practice, or breach is part of a pattern of misconduct; causes or is likely to cause more than a minimal loss to the regulated entity; or results in pecuniary gain or other benefit to such party.

(iii) *Third Tier.* Section 1376(b)(3) of the Safety and Soundness Act (12 U.S.C. 4636(b)(3)) provides that, notwithstanding paragraphs (b)(1) and (b)(2) thereof, any regulated entity or entity-affiliated party shall forfeit and pay a civil penalty, in accordance with section 1376(b)(4) of the Safety and Soundness Act (12 U.S.C. 4636(b)(4)), for each day during which such violation, practice, or breach continues, if such regulated entity or entity-affiliated party:

(A) Knowingly—

(*1*) Commits any violation described in any subparagraph of section 1376(b)(1) of the Safety and Soundness Act;

(*2*) Engages in any unsafe or unsound practice in conducting the affairs of the regulated entity; or

(*3*) Breaches any fiduciary duty; and

(B) Knowingly or recklessly causes a substantial loss to the regulated entity or a substantial pecuniary gain or other benefit to such party by reason of such violation, practice, or breach.

(b) *Maximum amounts.*—(1) *Maximum daily penalty.* Section 1376(b)(4) of the Safety and Soundness Act (12 U.S.C. 4636(b)(4)), prescribes the maximum daily amount of a civil penalty that may be assessed for any violation, practice, or breach pursuant to section 1376(b)(3) of the Safety and Soundness Act (12 U.S.C. 4636(b)(3)), in the case of any entity-affiliated party (not to exceed $2,000,000.00), and in the case of any regulated entity ($2,000,000.00).

(2) *Inflation Adjustment Act.* The maximum civil penalty amounts are subject to periodic adjustment under the Federal Civil Penalties Inflation Adjustment Act of 1990, as amended (28 U.S.C. 2461 note), as provided in subpart E of this part.

(c) *Factors in determining amount of penalty.* In accordance with section 1376(c)(2) of the Safety and Soundness Act (12 U.S.C. 4636(c)(2)), in assessing civil money penalties on a regulated entity or an entity-affiliated party in amounts as provided in section 1376(b) of the Safety and Soundness Act (12 U.S.C. 4636(b)), the Director shall give consideration to such factors as:

(1) The gravity of the violation, practice, or breach;

(2) Any history of prior violations or supervisory actions, or any attempts at concealment;

(3) The effect of the penalty on the safety and soundness of the regulated entity or the Office of Finance;

(4) Any loss or risk of loss to the regulated entity or to the Office of Finance;

(5) Any benefits received or derived, whether directly or indirectly, by the respondent(s);

(6) Any injury to the public;

(7) Any deterrent effect on future violations, practices, or breaches;

(8) The financial capacity of the respondent(s), or any unusual circumstance(s) of hardship upon an executive officer, director, or other individual;

(9) The promptness, cost, and effectiveness of any effort to remedy or ameliorate the consequences of the violation, practice, or breach;

(10) The candor and cooperation, if any, of the respondent(s); and

(11) Any other factors the Director may determine by regulation to be appropriate.

(d) *Review of imposition of penalty.* Section 1376(c)(3) of the Safety and Soundness Act (12 U.S.C. 4636(c)(3)) governs judicial review of a penalty order under section 1374 of the Safety and Soundness Act (12 U.S.C. 4634).

§ 1209.8 Removal and prohibition proceedings.

(a) *Removal and prohibition proceedings.*—(1) *Authority to issue order.* As provided by section 1377(a)(1) of the Safety and Soundness Act (12 U.S.C. 4636a(a)(1)), the Director may serve upon a party described in paragraph (a)(2) of this section, or any officer, director, or management of the Office of Finance, a notice of the intention of the Director to suspend or remove such party from office, or to prohibit any further participation by such party in any manner in the conduct of the affairs of the regulated entity or the Office of Finance.

(2) *Applicability.* As provided by section 1377(a)(2) of the Safety and Soundness Act (12 U.S.C. 4636a(a)(2)), a party described in this paragraph is an entity-affiliated party or any officer, director, or management of the Office of Finance, if the Director determines that:

(i) That party, officer, or director has, directly or indirectly—

(A) Violated—

(1) Any law or regulation;

(2) Any cease and desist order that has become final;

(3) Any condition imposed in writing by the Director in connection with an application, notice, or other request by a regulated entity; or

(4) Any written agreement between such regulated entity and the Director;

(B) Engaged or participated in any unsafe or unsound practice in connection with any regulated entity or business institution; or

(C) Committed or engaged in any act, omission, or practice which constitutes a breach of such party's fiduciary duty;

(ii) By reason of such violation, practice, or breach—

(A) Such regulated entity or business institution has suffered or likely will suffer financial loss or other damage; or

(B) Such party directly or indirectly received financial gain or other benefit; and

(iii) The violation, practice, or breach described in subparagraph (i) of this section—

(A) Involves personal dishonesty on the part of such party; or

(B) Demonstrates willful or continuing disregard by such party for the safety or soundness of such regulated entity or business institution.

(3) *Applicability to business entities.* Under section 1377(f) of the Safety and Soundness Act (12 U.S.C. 4636a(f)), this remedy applies only to a person who is an individual, unless the Director specifically finds that it should apply to a corporation, firm, or other business entity.

(b) *Suspension order.*—(1) *Suspension or prohibition authorized.* If the Director serves written notice under section 1377(a) of the Safety and Soundness Act (12 U.S.C. 4636a(a)) upon a party subject to that section, the Director may, by order, suspend or remove such party from office, or prohibit such party from further participation in any manner in the conduct of the affairs of the regulated entity or the Office of Finance, if the Director:

(i) Determines that such action is necessary for the protection of the regulated entity or the Office of Finance; and

(ii) Serves such party with written notice of the order.

(2) *Effective period.* The effective period of any order under section 1377(b)(1) of the Safety and Soundness Act (12 U.S.C. 4636a(b)(1)) is specified in section 1377(b)(2) of the Safety and Soundness Act (12 U.S.C. 4636a(b)(2)). An order of suspension shall become effective upon service and, absent a court-ordered stay, remains effective and enforceable until the date the Director dismisses the charges or the effective date of an order issued by the Director under section 1377(c)(4) of the Safety and Soundness Act (12 U.S.C. 4636a(c)(4),(5)).

(3) *Copy of order to be served on regulated entity.* In accordance with section 1377(b)(3) of the Safety and Soundness Act (12 U.S.C. 4636a(b)(3)), the Director will serve a copy of any order to suspend, remove, or prohibit participation in the conduct of the affairs on the Office of Finance or any regulated entity with which such party is affiliated at the time such order is issued.

(c) *Notice; hearing and order.*—(1) *Written notice.* A notice of the intention of the Director to issue an order under sections 1377(a) and (c) of the Safety and Soundness Act, (12 U.S.C. 4636a(a), (c)), shall conform with § 1209.23, and may include any such additional information as the Director may require.

(2) *Hearing.* A hearing on the record shall be held in the District of Columbia in accordance with sections 1373(a)(1) and 1377(c)(2) of the Safety and Soundness Act. *See* 12 U.S.C. 4633(a)(1), 4636a(c)(2).

(3) *Consent.* As provided by section 1377(c)(3) of the Safety and Soundness Act (12 U.S.C. 4636a(c)(3)), unless the party that is the subject of a notice delivered under paragraph (a) of this section appears in person or by a duly authorized representative of record, in the adjudicatory proceeding, such party shall be deemed to have consented to the issuance of an order under this section.

(4) *Issuance of order of suspension or removal.* As provided by section 1377(c)(4) of the Safety and Soundness Act (12 U.S.C. 4636a(c)(4)), the Director may issue an order under this part, as the Director may deem appropriate, if:

(i) A party is deemed to have consented to the issuance of an order under paragraph (d); or

(ii) Upon the record made at the hearing, the Director finds that any of the grounds specified in the notice have been established.

(5) *Effectiveness of order.* As provided by section 1377(c)(5) of the Safety and Soundness Act (12 U.S.C. 4636a(c)(5)), any order issued and served upon a party in accordance with this section shall become effective at the expiration of 30 days after the date of service upon such party and any regulated entity or entity-affiliated party. An order issued upon consent under paragraph (c)(3) of this section, however, shall become effective at the time specified therein. Any such order shall remain effective and enforceable except to such extent as it is stayed, modified, terminated, or set aside by action of the Director or a reviewing court.

(d) *Prohibition of certain activities and industry-wide prohibition.*—(1) *Prohibition of certain activities.* As provided by section 1377(d) of the Safety and Soundness Act (12 U.S.C. 4636a(d)), any person subject to an order issued under subpart B of this part shall not—

(i) Participate in any manner in the conduct of the affairs of any regulated entity or the Office of Finance;

(ii) Solicit, procure, transfer, attempt to transfer, vote, or attempt to vote any proxy, consent, or authorization with respect to any voting rights in any regulated entity;

(iii) Violate any voting agreement previously approved by the Director; or

(iv) Vote for a director, or serve or act as an entity-affiliated party of a regulated entity or as an officer or director of the Office of Finance.

(2) *Industry-wide prohibition.* As provided by section 1377(e)(1) of the Safety and Soundness Act (12 U.S.C. 4636a(e)(1)), except as provided in section 1377(e)(2) of the Safety and Soundness Act (12 U.S.C. 4636a(e)(2)), any person who, pursuant to an order issued under section 1377 of the Safety and Soundness Act (12 U.S.C. 4636a), has been removed or suspended from office in a regulated entity or the Office of Finance, or prohibited from participating in the conduct of the affairs of a regulated entity or the Office of Finance, may not, while such order is in effect, continue or commence to hold any office in, or participate in any manner in the conduct of the affairs of, any regulated entity or the Office of Finance.

(3) *Relief from industry-wide prohibition at the discretion of the Director.*—(i) *Relief from order.* As provided by section 1377(e)(2) of the Safety and Soundness Act (12 U.S.C. 4636a(e)(2)), if, on or after the date on which an order has been issued under section 1377 of the Safety and Soundness Act (12 U.S.C. 4636a) that removes or suspends from office any party, or prohibits such party from participating in the conduct of the affairs of a regulated entity or the Office of Finance, such party receives the written consent of the Director, the order shall cease to apply to such party with respect to the regulated entity or the Office of Finance to the extent described in the written consent. Such written consent shall be on such terms and conditions as the Director therein may specify in his discretion. Any such consent shall be publicly disclosed.

(ii) *No private right of action; no final agency action.* Nothing in this paragraph shall be construed to require the Director to entertain or to provide such written consent, or to confer any rights to such consideration or consent upon any party, regulated entity, entity-affiliated party, or the Office of Finance. Additionally, whether the Director consents to relief from an outstanding order under this part is committed wholly to the discretion of the Director, and such determination shall not be a final agency action for purposes of seeking judicial review.

(4) *Violation of industry-wide prohibition.* As provided by section 1377(e)(3) of the Safety and Soundness Act (12 U.S.C. 4636a(e)(3)), any violation of section 1377(e)(1) of the Safety and Soundness Act (12 U.S.C. 4636a(e)(1)) by any person who is subject to an order issued under section 1377(h) of the Safety and Soundness Act (12 U.S.C. 4636a(h)) (suspension or removal of entity-affiliated party charged with felony) shall be treated as a violation of the order.

(e) *Stay of suspension or prohibition of entity-affiliated party.* As provided by section 1377(g) of the Safety and Soundness Act (12 U.S.C. 4636a(g)), not later than 10 days after the date on which any entity-affiliated party has been suspended from office or prohibited from participation in the conduct of the affairs of a regulated entity, such party may apply to the United States District Court for the District of Columbia, or the United States district court for the judicial district in which the headquarters of the regulated entity is located, for a stay of such suspension or prohibition pending the completion of the administrative enforcement proceeding pursuant to section 1377(c) of the Safety and Soundness Act (12 U.S.C. 4636a(c)). The court shall have jurisdiction to stay such suspension or prohibition, but such jurisdiction does not extend to the administrative enforcement proceeding.

§ 1209.9 Supervisory actions not affected.

As provided by section 1311(c) of the Safety and Soundness Act (12 U.S.C. 4511(c)), the authority of the Director to take action under subtitle A of the Safety and Soundness Act (12 U.S.C. 4611 *et seq.*) (*e.g.,* the appointment of a conservator or receiver for a regulated entity; entering into a written agreement or pursuing an informal agreement with a regulated entity as the Director deems appropriate; and undertaking other such actions as may be applicable to undercapitalized, significantly undercapitalized or critically undercapitalized regulated entities), or to initiate enforcement proceedings under subtitle C of the Safety and Soundness Act (12 U.S.C. 4631 *et seq.*), shall not in any way limit the general supervisory or regulatory authority granted the Director under section 1311(b) of the Safety and Soundness Act (12 U.S.C. 4511(b)). The selection and form of regulatory or supervisory action under the Safety and Soundness Act is committed to the discretion of the Director, and the selection of one form of action or a combination of actions does not foreclose the Director from pursuing any other supervisory action authorized by law.

Subpart C—Rules of Practice and Procedure

§ 1209.10 Authority of the Director.

The Director may, at any time during the pendency of a proceeding, perform, direct the performance of, or waive performance of any act that could be done or ordered by the presiding officer.

§ 1209.11 Authority of the Presiding Officer.

(a) *General rule.* All proceedings governed by subpart C of this part shall be conducted consistent with the provisions of chapter 5 of Title 5 of the

United States Code. The presiding officer shall have complete charge of the adjudicative proceeding, conduct a fair and impartial hearing, avoid unnecessary delay, and assure that a complete record of the proceeding is made.

(b) *Powers.* The presiding officer shall have all powers necessary to conduct the proceeding in accordance with paragraph (a) of this section and 5 U.S.C. 556(c). The presiding officer is authorized to:

(1) *Control the proceedings.* (i) Upon reasonable notice to the parties, not earlier than 30 days or later than 60 days after service of a notice of charges under the Safety and Soundness Act, set a date, time, and place for an evidentiary hearing on the record, within the District of Columbia, as provided in section 1373 of the Safety and Soundness Act (12 U.S.C. 4633), in a scheduling order that may be issued in conjunction with the initial scheduling conference set under § 1209.36, or otherwise as the presiding officer finds in the best interest of justice, in accordance with this part; and

(ii) Upon reasonable notice to the parties, reset or change the date, time, or place (within the District of Columbia) of an evidentiary hearing;

(2) Continue or recess the hearing in whole or in part for a reasonable period of time;

(3) Hold conferences to address legal or factual issues, or evidentiary matters materially relevant to the charges or allowable defenses; to regulate the timing and scope of discovery and rule on discovery plans; or otherwise to consider matters that may facilitate an effective, fair, and expeditious disposition of the proceeding;

(4) Administer oaths and affirmations;

(5) Issue and enforce subpoenas, subpoenas *duces tecum,* discovery and protective orders, as authorized by this part, and to revoke, quash, or modify such subpoenas issued by the presiding officer;

(6) Take and preserve testimony under oath;

(7) Rule on motions and other procedural matters appropriate in an adjudicatory proceeding, except that only the Director shall have the power to grant summary disposition or any motion to dismiss the proceeding or to make a final determination of the merits of the proceeding;

(8) Take all actions authorized under this part to regulate the scope, timing, and completion of discovery of any non-privileged documents that are materially relevant to the charges or allowable defenses;

(9) Regulate the course of the hearing and the conduct of representatives and parties;

(10) Examine witnesses;

(11) Receive materially relevant evidence, and rule upon the admissibility of evidence or exclude, limit, or otherwise rule on offers of proof;

(12) Upon motion of a party, take official notice of facts;

(13) Recuse himself upon his own motion or upon motion made by a party;

(14) Prepare and present to the Director a recommended decision as provided in this part;

(15) Establish time, place, and manner limitations on the attendance of the public and the media for any public hearing; and

(16) Do all other things necessary or appropriate to discharge the duties of a presiding officer.

§ 1209.12 Public hearings; closed hearings.

(a) *General rule.* As provided in section 1379B(b) of the Safety and Soundness Act (12 U.S.C. 4639(b)), all hearings shall be open to the public, except that the Director, in his discretion, may determine that holding an open hearing would be contrary to the public interest. The Director may make such determination *sua sponte* at any time by written notice to all parties, or as provided in paragraphs (b) and (c) of this section.

(b) *Motion for closed hearing.* Within 20 days of service of the notice of charges, any party may file with the presiding officer a motion for a private hearing and any party may file a pleading in reply to the motion. The presiding officer shall forward the motion and any reply, together with a recommended decision on the motion, to the Director, who shall make a final determination. Such motions and replies are governed by § 1209.28 of this part. A determination under this section is committed to the discretion of the Director and is not a reviewable final agency action.

(c) *Filing documents under seal.* FHFA counsel of record, in his discretion, may file or require the filing of any document or part of a document under seal, if such counsel makes a written determination that disclosure of the document would be contrary to the public interest. The presiding officer shall issue an order to govern confidential information, and take all appropriate steps to preserve the confidentiality of such documents in whole or in part, including closing any portion of a hearing to the public or issuing a protective order under such terms as may be acceptable to FHFA counsel of record.

(d) *Procedures for closed hearing.* An evidentiary hearing, or any part thereof, that is closed for the purpose of offering into evidence testimony or documents filed under seal as provided in paragraph (c) of this section shall be conducted under procedures that may include: prior notification to the submitter of confidential information; provisions for sealing portions of the record, briefs, and decisions; *in camera* arguments, offers of proof, and testimony; and limitations on representatives of record or other participants, as the presiding officer may designate. Additionally, at such proceedings the presiding officer may make an opening statement as to the confidentiality and limitations and deliver an oath to the parties, representatives of record, or other approved participants as to the confidentiality of the proceedings.

§ 1209.13 Good faith certification.

(a) *General requirement.* Every filing or submission of record following the issuance of a notice of charges by the Director shall be signed by at least one representative of record in his individual name and shall state that representative's business contact information, which shall include his address, electronic mail address, and telephone number; and the names, addresses and telephone numbers of all other representatives of record for the person making the filing or submission.

(b) *Effect of signature.* (1) By signing a document, a representative of record or party appearing *pro se* certifies that:

(i) The representative of record or party has read the filing or submission of record;

(ii) To the best of his knowledge, information and belief formed after reasonable inquiry, the filing or submission of record is well-grounded in fact and is warranted by existing law or a good faith, non-frivolous argument for the extension, modification, or reversal of existing law, regulation, or FHFA order or policy; and

(iii) The filing or submission of record is not made for any improper purpose, such as to harass or to cause unnecessary delay or needless increase in the cost of litigation.

(2) If a filing or submission of record is not signed, the presiding officer shall strike the filing or submission of record, unless it is signed promptly after the omission is called to the attention of the pleader or movant.

(c) *Effect of making oral motion or argument.* The act of making any oral motion or oral argument by any

representative or party shall constitute a certification that to the best of his knowledge, information, and belief, formed after reasonable inquiry, his statements are well-grounded in fact and are warranted by existing law or a good faith, non-frivolous argument for the extension, modification, or reversal of existing law, regulation, or FHFA order or policy, and are not made for any improper purpose, such as to harass or to cause unnecessary delay or to needlessly increase litigation-related costs.

§ 1209.14 Ex parte communications.

(a) *Definition.*—(1) *Ex parte* communication means any material oral or written communication relevant to an adjudication of the merits of any proceeding under this subpart that was neither on the record nor on reasonable prior notice to all parties that takes place between:

(i) An interested person outside FHFA (including the person's representative of record); and

(ii) The presiding officer handling that proceeding, the Director, a decisional employee assigned to that proceeding, or any other person who is or may be reasonably expected to be involved in the decisional process.

(2) A communication that is procedural in that it does not concern the merits of an adjudicatory proceeding, such as a request for status of the proceeding, does not constitute an *ex parte* communication.

(b) *Prohibition of ex parte communications.* From the time a notice of charges commencing a proceeding under this part is issued by the Director until the date that the Director issues his final decision pursuant to § 1209.55 of this part, no person referred to in paragraph (a)(1)(i) of this section shall knowingly make or cause to be made an *ex parte* communication with the Director or the presiding officer. The Director, presiding officer, or a decisional employee shall not knowingly make or cause to be made an *ex parte* communication.

(c) *Procedure upon occurrence of ex parte communication.* If an *ex parte* communication is received by any person identified in paragraph (a) of this section, that person shall cause all such written communications (or, if the communication is oral, a memorandum stating the substance of the communication) to be placed on the record of the proceeding and served on all parties. All parties to the proceeding shall have an opportunity within 10 days of receipt of service of the *ex parte* communication to file responses thereto, and to recommend sanctions that they believe to be appropriate under the circumstances, in accordance with paragraph (d) of this section.

(d) *Sanctions.* Any party or representative for a party who makes an *ex parte* communication, or who encourages or solicits another to make an *ex parte* communication, may be subject to any appropriate sanction or sanctions imposed by the Director or the presiding officer, including, but not limited to, exclusion from the proceedings, an adverse ruling on the issue that is the subject of the prohibited communication, or other appropriate and commensurate action(s).

(e) *Consultations by presiding officer.* Except to the extent required for the disposition of *ex parte* matters as authorized by law, the presiding officer may not consult a person or party on any matter relevant to the merits of the adjudication, unless upon notice to and opportunity for all parties to participate.

(f) *Separation of functions.* An employee or agent engaged in the performance of any investigative or prosecuting function for FHFA in a case may not, in that or in a factually related case, participate or advise in the recommended decision, the Director's review under § 1209.55 of the recommended decision, or the Director's final determination on the merits based upon his review of the recommended decision, except as a witness or counsel in the adjudicatory proceedings. This section shall not prohibit FHFA counsel of record from providing necessary and appropriate legal advice to the Director on supervisory (including information or legal advice as to settlement issues) or regulatory matters.

§ 1209.15 Filing of papers.

(a) *Filing.* All pleadings, motions, memoranda, and any other submissions or papers required to be filed in the proceeding shall be addressed to the presiding officer and filed with FHFA, 1700 G Street, NW., Fourth Floor, Washington, DC 20552, in accordance with paragraphs (b) and (c) of this section.

(b) *Manner of filing.* Unless otherwise specified by the Director or the presiding officer, filing shall be accomplished by:

(1) *Overnight delivery.* Overnight U.S. Postal Service delivery or delivery by a reliable commercial delivery service for same day or overnight delivery to the address stated above; or

(2) *U.S. Mail.* First class, registered, or certified mail via the U.S. Postal Service; and

(3) *Electronic media.* Transmission by electronic media shall be required by and upon any conditions specified by the Director or the presiding officer. FHFA shall provide a designated site for the electronic filing of all papers in a proceeding in accordance with any conditions specified by the presiding officer. All papers filed by electronic media shall be filed concurrently in a manner set out above and in accordance with paragraph (c) of this section.

(c) *Formal requirements as to papers filed.*—(1) *Form.* To be filed, all papers must set forth the name, address, telephone number, and electronic mail address of the representative or party seeking to make the filing. Additionally, all such papers must be accompanied by a certification setting forth when and how service has been made on all other parties. All papers filed must be double-spaced on 8½ x 11-inch paper and must be clear, legible, and formatted as required by paragraph (c)(5) of this section.

(2) *Signature.* All papers filed must be dated and signed as provided in § 1209.13.

(3) *Caption.* All papers filed must include at the head thereof, or on a title page, the FHFA caption, title and docket number of the proceeding, the name of the filing party, and the subject of the particular paper.

(4) *Number of copies.* Unless otherwise specified by the Director or the presiding officer, an original and one copy of all pleadings, motions and memoranda, or other such papers shall be filed, except that only one copy of transcripts of testimony and exhibits shall be filed.

(5) *Content format.* All papers filed shall be formatted in such program(s) (*e.g.,* MS WORD©, MS Excel©, or WordPerfect©) as the presiding officer or Director shall specify.

§ 1209.16 Service of papers.

(a) Except as otherwise provided, a party filing papers or serving a subpoena shall serve a copy upon the representative of record for each party to the proceeding so represented, and upon any party who is not so represented, in accordance with the requirements of this section.

(b) Except as provided in paragraphs (c)(2) and (d) of this section, a serving party shall use one or more of the following methods of service:

(1) Personal service;

(2) Overnight U.S. Postal Service delivery or delivery by a reliable commercial delivery service for same day or overnight delivery to the parties' respective street addresses; or

(3) First class, registered, or certified mail via the U.S. Postal Service; and

(4) For transmission by electronic media, each party shall promptly

provide the presiding officer and all parties, in writing, an active electronic mail address where service will be accepted on behalf of such party. Any document transmitted via electronic mail for service on a party shall comply in all respects with the requirements of § 1209.15(c).

(5) Service of pleadings or other papers made by facsimile may not exceed a total page count of 30 pages. Any paper served by facsimile transmission shall meet the requirements of § 1209.15(c).

(6) Any party serving a pleading or other paper by electronic media under paragraph (4) of this section also shall concurrently serve that pleading or paper by one of the methods specified in paragraphs (1) through (5) of this section.

(c) *By the Director or the presiding officer.* (1) All papers required to be served by the Director or the presiding officer upon a party who has appeared in the proceeding in accordance with § 1209.72 shall be served by the means specified in paragraph (b) of this section.

(2) If a notice of appearance has not been filed in the proceeding for a party in accordance with § 1209.72, the Director or the presiding officer shall make service upon the party by any of the following methods:

(i) By personal service;

(ii) If the person to be served is an individual, by delivery to a person of suitable age and discretion at the physical location where the individual resides or works;

(iii) If the person to be served is a corporation or other association, by delivery to an officer, managing or general agent, or to any other agent authorized by appointment or by law to receive service and, if the agent is one authorized by statute to receive service and the statute so requires, by also mailing a copy to the party;

(iv) By registered or certified mail addressed to the person's last known address; or

(v) By any other method reasonably calculated to give actual notice.

(d) *Subpoenas.* Service of a subpoena may be made:

(1) By personal service;

(2) If the person to be served is an individual, by delivery to a person of suitable age and discretion at the physical location where the individual resides or works;

(3) If the person to be served is a corporation or other association, by delivery to an officer, managing or general agent, or to any other agent authorized by appointment or by law to receive service and, if the agent is one authorized by statute to receive service and the statute so requires, by also mailing a copy to the party;

(4) By registered or certified mail addressed to the person's last known address; or

(5) By any other method reasonably calculated to give actual notice.

(e) *Area of service.* Service in any State or the District of Columbia, or any commonwealth, possession, territory or other place subject to the jurisdiction of the United States, or on any person doing business in any State or the District of Columbia, or any commonwealth, possession, territory or other place subject to the jurisdiction of the United States, or on any person as otherwise permitted by law, is effective without regard to the place where the hearing is held.

(f) *Proof of service.* Proof of service of papers filed by a party shall be filed before action is taken thereon. The proof of service, which shall serve as prima facie evidence of the fact and date of service, shall show the date and manner of service and may be by written acknowledgment of service, by declaration of the person making service, or by certificate of a representative of record. However, failure to file proof of service contemporaneously with the papers shall not affect the validity of actual service. The presiding officer may allow the proof to be amended or supplied, unless to do so would result in material prejudice to a party.

§ 1209.17 Time computations.

(a) *General rule.* In computing any period of time prescribed or allowed under this part, the date of the act or event that commences the designated period of time is not included. Computations shall include the last day of the time period, unless the day falls on a Saturday, Sunday, or Federal holiday. When the last day is a Saturday, Sunday or Federal holiday, the period of time shall run until the end of the next day that is not a Saturday, Sunday, or Federal holiday. Intermediate Saturdays, Sundays and Federal holidays are included in the computation of time. However, when the time period within which an act is to be performed is 10 days or less, not including any additional time allowed for in paragraph (c) of this section, intermediate Saturdays, Sundays and Federal holidays are not included.

(b) *When papers are deemed to be filed or served.* (1) Filing or service are deemed to be effective:

(i) In the case of personal service or same day reliable commercial delivery service, upon actual service;

(ii) In the case of U.S. Postal Service or reliable commercial overnight delivery service, or first class, registered, or certified mail, upon deposit in or delivery to an appropriate point of collection;

(iii) In the case of transmission by electronic media, as specified by the authority receiving the filing, in the case of filing; or

(iv) In the case of transmission by electronic media or facsimile, when the device through which the document was sent provides a reliable indicator that the document has been received by the opposing party, in the case of service.

(2) The effective filing and service dates specified in paragraph (b)(1) of this section may be modified by the Director or the presiding officer, or by agreement of the parties in the case of service.

(c) *Calculation of time for service and filing of responsive papers.* Whenever a time limit is measured by a prescribed period from the service of any notice, pleading or paper, the applicable time limits shall be calculated as follows:

(1) If service was made by delivery to the U.S. Postal Service for longer than overnight delivery service by first class, registered, or certified mail, add three calendar days to the prescribed period for the responsive pleading or other filing.

(2) If service was personal, or was made by delivery to the U.S. Postal Service or any reliable commercial delivery service for overnight delivery, add one calendar-day to the prescribed period for the responsive pleading or other filing.

(3) If service was made by electronic media transmission or facsimile, add one calendar-day to the prescribed period for the responsive pleading or other filing—unless otherwise determined by the Director or the presiding officer *sua sponte,* or upon motion of a party in the case of filing or by prior agreement among the parties in the case of service.

§ 1209.18 Change of time limits.

Except as otherwise by law required, the presiding officer may extend any time limit that is prescribed above or in any notice or order issued in the proceedings. After the referral of the case to the Director pursuant to § 1209.53, the Director may grant extensions of the time limits for good cause shown. Extensions may be granted on the motion of a party after notice and opportunity to respond is afforded all nonmoving parties, or on the Director's or the presiding officer's own motion.

§ 1209.19 Witness fees and expenses.

Witnesses (other than parties) subpoenaed for testimony (or for a deposition in lieu of personal appearance at a hearing) shall be paid the same fees for attendance and mileage as are paid in the United States district courts in proceedings in which the United States is a party, provided that, in the case of a discovery subpoena addressed to a party, no witness fees or mileage shall be paid. Fees for witnesses shall be tendered in advance by the party requesting the subpoena, except that fees and mileage need not be tendered in advance where FHFA is the party requesting the subpoena. FHFA shall not be required to pay any fees to or expenses of any witness who was not subpoenaed by FHFA.

§ 1209.20 Opportunity for informal settlement.

Any respondent may, at any time in the proceeding, unilaterally submit to FHFA's counsel of record written offers or proposals for settlement of a proceeding without prejudice to the rights of any of the parties. No such offer or proposal shall be made to any FHFA representative other than FHFA counsel of record. Submission of a written settlement offer does not provide a basis for adjourning, deferring or otherwise delaying all or any portion of a proceeding under this part. No settlement offer or proposal, or any subsequent negotiation or resolution, is admissible as evidence in any proceeding.

§ 1209.21 Conduct of examination.

Nothing in this part limits or constrains in any manner any duty, authority, or right of FHFA to conduct or to continue any examination, investigation, inspection, or visitation of any regulated entity or entity-affiliated party.

§ 1209.22 Collateral attacks on adjudicatory proceeding.

If an interlocutory appeal or collateral attack is brought in any court concerning all or any part of an adjudicatory proceeding, the challenged adjudicatory proceeding shall continue without regard to the pendency of that court proceeding. No default or other failure to act as directed in the adjudicatory proceeding within the times prescribed in subpart C of this part shall be excused based on the pendency before any court of any interlocutory appeal or collateral attack.

§ 1209.23 Commencement of proceeding and contents of notice of charges.

Proceedings under subpart C of this part are commenced by the Director by the issuance of a notice of charges, as defined in § 1209.3(p), that must be served upon a respondent. A notice of charges shall state all of the following:

(a) The legal authority for the proceeding and for FHFA's jurisdiction over the proceeding;

(b) A statement of the matters of fact or law showing that FHFA is entitled to relief;

(c) A proposed order or prayer for an order granting the requested relief;

(d) Information concerning the nature of the proceeding and pertinent procedural matters, including: the requirement that the hearing shall be held in the District of Columbia; the presiding officer will set the date and location for an evidentiary hearing in a scheduling order to be issued not less than 30 days or more than 60 days after service of the notice of charges; contact information for FHFA enforcement counsel and the presiding officer, if known; submission information for filings and appearances, the time within which to request a hearing, and citation to FHFA Rules of Practice and Procedure; and

(e) Information concerning proper filing of the answer, including the time within which to file the answer as required by law or regulation, a statement that the answer shall be filed with the presiding officer or with FHFA as specified therein, and the address for filing the answer (and request for a hearing, if applicable).

§ 1209.24 Answer.

(a) *Filing deadline.* Unless otherwise specified by the Director in the notice, respondent shall file an answer within 20 days of service of the notice of charges initiating the enforcement action.

(b) *Content of answer.* An answer must respond specifically to each paragraph or allegation of fact contained in the notice of charges and must admit, deny, or state that the party lacks sufficient information to admit or deny each allegation of fact. A statement of lack of information has the effect of a denial. Denials must fairly meet the substance of each allegation of fact denied; general denials are not permitted. When a respondent denies part of an allegation, that part must be denied and the remainder specifically admitted. Any allegation of fact in the notice that is not denied in the answer is deemed admitted for purposes of the proceeding. A respondent is not required to respond to the portion of a notice that constitutes the prayer for relief or proposed order. The answer must set forth affirmative defenses, if any, asserted by the respondent.

(c) *Default.* Failure of a respondent to file an answer required by this section within the time provided constitutes a waiver of such respondent's right to appear and contest the allegations in the notice. If no timely answer is filed, FHFA counsel of record may file a motion for entry of an order of default. Upon a finding that no good cause has been shown for the failure to file a timely answer, the presiding officer shall file with the Director a recommended decision containing the findings and the relief sought in the notice. Any final order issued by the Director based upon a respondent's failure to answer is deemed to be an order issued upon consent.

§ 1209.25 Amended pleadings.

(a) *Amendments.* The notice or answer may be amended or supplemented at any stage of the proceeding. The respondent must answer an amended notice within the time remaining for the respondent's answer to the original notice, or within 10 days after service of the amended notice, whichever period is longer, unless the Director or presiding officer orders otherwise for good cause shown.

(b) *Amendments to conform to the evidence.* When issues not raised in the notice or answer are tried at the hearing by express or implied consent of the parties, or as the presiding officer may allow for good cause shown, such issues will be treated in all respects as if they had been raised in the notice or answer, and no formal amendments are required. If evidence is objected to at the hearing on the ground that it is not within the issues raised by the notice or answer, the presiding officer may admit the evidence when admission is likely to assist in adjudicating the merits of the action. The presiding officer will do so freely when the determination of the merits of the action is served thereby and the objecting party fails to satisfy the presiding officer that the admission of such evidence would unfairly prejudice that party's action or defense upon the merits. The presiding officer may grant a continuance to enable the objecting party to meet such evidence.

§ 1209.26 Failure to appear.

Failure of a respondent to appear in person at the hearing or by a duly authorized representative of record constitutes a waiver of respondent's right to a hearing and is deemed an admission of the facts as alleged and consent to the relief sought in the notice. Without further proceedings or notice to the respondent, the presiding officer shall file with the Director a recommended decision containing the

Agency's findings and the relief sought in the notice.

§ 1209.27 Consolidation and severance of actions.

(a) *Consolidation.* On the motion of any party, or on the presiding officer's own motion, the presiding officer may consolidate, for some or all purposes, any two or more proceedings, if each such proceeding involves or arises out of the same transaction, occurrence or series of transactions or occurrences, or involves at least one common respondent or a material common question of law or fact, unless such consolidation would cause unreasonable delay or injustice. In the event of consolidation under this section, appropriate adjustment to the pre-hearing schedule must be made to avoid unnecessary expense, inconvenience, or delay.

(b) *Severance.* The presiding officer may, upon the motion of any party, sever the proceeding for separate resolution of the matter as to any respondent only if the presiding officer finds that undue prejudice or injustice to the moving party would result from not severing the proceeding and such undue prejudice or injustice would outweigh the interests of judicial economy and expedition in the complete and final resolution of the proceeding.

§ 1209.28 Motions.

(a) *In writing.* (1) Except as otherwise provided herein, an application or request for an order or ruling must be made by written motion.

(2) All written motions must state with particularity the relief sought and must be accompanied by a proposed order.

(3) No oral argument may be held on written motions except as otherwise directed by the presiding officer. Written memoranda, briefs, affidavits, or other relevant material or documents may be filed in support of or in opposition to a motion.

(b) *Oral motions.* A motion may be made orally on the record, unless the presiding officer directs that such motion be reduced to writing, in which case the motion will be subject to the requirements of this section.

(c) *Filing of motions.* Motions must be filed with the presiding officer and served on all parties; except that following the filing of a recommended decision, motions must be filed with the Director. Motions for pre-trial relief such as motions *in limine* or objections to offers of proof or experts shall be filed not less than 10 days prior to the date of the evidentiary hearing, except as provided with the consent of the presiding officer for good cause shown.

(d) *Responses and replies.* (1) Except as otherwise provided herein, any party may file a written response to a non-dispositive motion within 10 days after service of any written motion, or within such other period of time as may be established by the presiding officer or the Director; and the moving party may file a written reply to a written response to a non-dispositive motion within five days after the service of the response, unless some other period is ordered by the presiding officer or the Director. The presiding officer shall not rule on any oral or written motion before each party with an interest in the motion has had an opportunity to respond as provided in this section.

(2) The failure of a party to oppose a written motion or an oral motion made on the record is deemed as consent by that party to the entry of an order substantially in the form of the order accompanying the motion.

(e) *Dilatory motions.* Frivolous, dilatory, or substantively repetitive motions are prohibited. The filing of such motions may form the basis for sanctions.

(f) *Dispositive motions.* Dispositive motions are governed by §§ 1209.34 and 1209.35 of this part.

§ 1209.29 Discovery.

(a) *General rule.* (1) *Limits on discovery.* Subject to the limitations set out in paragraphs (a)(2), (b), (d), and (e) of this section, a party to a proceeding under this part may obtain document discovery by serving upon any other party in the proceeding a written request to produce documents. For purposes of such requests, the term ''documents'' may be defined to include records, drawings, graphs, charts, photographs, recordings, or data stored in electronic form or other data compilations from which information can be obtained or translated, if necessary, by the parties through detection devices into reasonably usable form (*e.g.,* electronically stored information), as well as written material of all kinds.

(2) *Discovery plan.* (i) In the initial scheduling conference held in accordance with § 1209.36, or otherwise at the earliest practicable time, the presiding officer shall require the parties to confer in good faith to develop and submit a joint discovery plan for the timely, cost-effective management of document discovery (including, if applicable, electronically stored information). The discovery plan should provide for the coordination of similar discovery requests by multiple parties, if any, and specify how costs are to be apportioned among those parties. The discovery plan shall specify the form of electronic productions, if any. Documents are to be produced in accordance with the technical specifications described in the discovery plan.

(ii) Discovery in the proceeding may commence upon the approval of the discovery plan by the presiding officer. Thereafter, the presiding officer may interpret or modify the discovery plan for good cause shown or in his or her discretion due to changed circumstances.

(iii) Nothing in paragraph (a)(2) of this section shall be interpreted or deemed to require the production of documents that are privileged or not reasonably accessible because of undue burden or cost, or to require any document production otherwise inconsistent with the limitations on discovery set forth in this part.

(b) *Relevance and scope.* (1) A party may obtain document discovery regarding any matter not privileged that is materially relevant to the charges or allowable defenses raised in the pending proceeding.

(2) The scope of available discovery shall be limited in accordance with subpart C of this part. Any request for the production of documents that seeks to obtain privileged information or documents not materially relevant under paragraph (b)(1) of this section, or that is unreasonable, oppressive, excessive in scope, unduly burdensome, cumulative, or repetitive of any prior discovery requests, shall be denied or modified.

(3) A request for document discovery is unreasonable, oppressive, excessive in scope, or unduly burdensome—and shall be denied or modified—if, among other things, the request:

(i) Fails to specify justifiable limitations on the relevant subject matter, time period covered, search parameters, or the geographic location(s) or data repositories to be searched;

(ii) Fails to identify documents with sufficient specificity;

(iii) Seeks material that is duplicative, cumulative, or obtainable from another source that is more accessible, cost-effective, or less burdensome;

(iv) Calls for the production of documents to be delivered to the requesting party or his or her designee and fails to provide a written agreement by the requestor to pay in advance for the costs of production in accordance with § 1209.30, or otherwise fails to take into account costs associated with processing electronically stored

information or any cost-sharing agreements between the parties;

(v) Fails to afford the responding party adequate time to respond; or

(vi) Fails to take into account retention policies or security protocols with respect to Federal information systems.

(c) *Forms of discovery.* Discovery shall be limited to requests for production of documents for inspection and copying. No other form of discovery shall be allowed. Discovery by use of interrogatories is not permitted. This paragraph shall not be interpreted to require the creation of a document.

(d) *Privileged matter.*—(1) *Privileged documents are not discoverable.* (i) Privileges include the attorney-client privilege, work-product privilege, any government's or government agency's deliberative process privilege, and any other privileges provided by the Constitution, any applicable act of Congress, or the principles of common law.

(ii) The parties may enter into a written agreement to permit a producing party to assert applicable privileges of a document even after its production and to request the return or destruction of privileged matter (claw back agreement). The parties shall file the claw back agreement with the presiding officer. To ensure the enforceability of the terms of any such claw back agreement, the presiding officer shall enter an order. Any party may petition the presiding officer for an order specifying claw back procedures for good cause shown.

(2) *No effect on examination authority.* The limitations on discoverable matter provided for in this part are not intended and shall not be construed to limit or otherwise affect the examination, regulatory or supervisory authority of FHFA.

(e) *Time limits.* All discovery matters, including all responses to discovery requests, shall be completed at least 20 days prior to the date scheduled for the commencement of the testimonial phase of the hearing. No exception to this discovery time limit shall be permitted, unless the presiding officer finds on the record that good cause exists for waiving the 20-day requirement of this paragraph.

(f) *Production.* Documents must be produced as they are kept in the usual course of business, or labeled and organized to correspond with the categories in the request, or otherwise produced in a manner determined by mutual agreement between the requesting party and the party or non-party to whom the request is directed in accordance with this part.

§ 1209.30 Request for document discovery from parties.

(a) *General rule.* Each request for the production of documents must conform to the requirements of this part.

(1) *Limitations.* Subject to applicable limitations on discovery in this part, a party may serve (requesting party) a request on another party (responding party) for the production of any non-privileged, discoverable documents in the possession, custody, or control of the responding party. A requesting party shall serve a copy of any such document request on all other parties. Each request for the production of documents must, with reasonable particularity, identify or describe the documents to be produced, either by individual item or by category, with sufficient specificity to enable the responding party to respond consistent with the requirements of this part.

(2) *Discovery plan.* Document discovery under subpart C of this part shall be consistent with any discovery plan approved by the presiding officer under § 1209.29.

(b) *Production and costs.*—(1) *General rule.* Subject to the applicable limitations on discovery in this part and the discovery plan, the requesting party shall specify a reasonable time, place, and manner for the production of documents and the performance of any related acts. The responding party shall produce documents to the requesting party in a manner consistent with the discovery plan.

(2) *Costs.* All costs associated with document productions—including, without limitation, photocopying (as specified in paragraph (b)(4) of this section) or electronic processing (as specified in paragraph (b)(5) of this section)—shall be born by the requesting party, or otherwise in accordance with any discovery plan approved by the presiding officer that may require such costs be apportioned between parties, or as otherwise ordered by the presiding officer. If consistent with the discovery plan approved by the presiding officer, the responding party may require receipt of payment of any such document production costs in advance before any such production of responsive documents.

(3) *Organization.* Unless otherwise provided for in any discovery plan approved by the presiding officer under § 1209.29 of this part, or by order of the presiding officer, documents must be produced as they are kept in the usual course of business or they shall be labeled and organized to correspond with the categories in the document request.

(4) *Photocopying charges.* Photocopying charges are to be set at the current rate per page imposed by FHFA under the fee schedule pursuant to § 1202.11(c) of this part for requests for documents filed under the Freedom of Information Act, 5 U.S.C. 552.

(5) *Electronic processing.* In the event that any party seeks the production of electronically stored information (*i.e.,* information created, stored, communicated, or used in digital format requiring the use of computer hardware and software), the parties shall confer in good faith to resolve common discovery issues related to electronically stored information, such as preservation, search methodology, collection, and need for such information; the suitability of alternative means to obtain it; and the format of production. Consistent with the discovery plan approved by the presiding officer under § 1209.29, costs associated with the processing of such electronic information (*i.e.,* imaging; scanning; conversion of ''native'' files to images that are viewable and searchable; indexing; coding; database or Web-based hosting; searches; branding of endorsements, such as ''confidential'' or document control numbering; privilege reviews; and copies of production discs) and delivery of any such document production, shall be born by the requesting party, apportioned among the parties, or as otherwise ordered by the presiding officer. Nothing in this part shall be deemed to require FHFA to produce privileged documents or any electronic records in violation of applicable Federal law or security protocols.

(c) *Obligation to update responses.* A party who has responded to a discovery request is not required to supplement the response, unless:

(1) The responding party learns that in some material respect the information disclosed is incomplete or incorrect, and

(2) The additional or corrective information has not otherwise been made known to the other parties during the discovery process or in writing.

(d) *Motions to strike or limit discovery requests.* (1) Any party served with a document discovery request may object within 30 days of service of the request by filing a motion to strike or limit the request in accordance with the provisions of § 1209.28 of this part. No other party may file an objection. If an objection is made only to a portion of an item or category in a request, the objection shall specify that portion. Any objections not made in accordance with this paragraph and § 1209.28 are waived.

(2) The party who served the request that is the subject of a motion to strike

or limit may file a written response in accordance with the provisions of § 1209.28. A reply by the moving party, if any, shall be governed by § 1209.28. No other party may file a response.

(e) *Privilege.* At the time other documents are produced, all documents withheld on a claim of privilege must be reasonably identified, together with a statement of the basis for the assertion of privilege on a privilege log. When similar documents that are protected by the government's deliberative process, investigative or examination privilege, the attorney work-product doctrine, or the attorney-client privilege are voluminous, such documents may be identified on the log by category instead of by individual document. The presiding officer has discretion to permit submission of a privilege log subsequent to the document production(s), which may occur on a rolling basis if agreed to by the parties in the discovery plan, and to determine whether an identification by category is sufficient to provide notice of withheld documents.

(f) *Motions to compel production.* (1) If a party withholds any document as privileged or fails to comply fully with a document discovery request, the requesting party may, within 10 days of the assertion of privilege or of the time the failure to comply becomes known to the requesting party, file a motion in accordance with the provisions of § 1209.28 for the issuance of a subpoena compelling the production of any such document.

(2) The party who asserted the privilege or failed to comply with the request may, within five days of service of a motion for the issuance of a subpoena compelling production, file a written response to the motion. No other party may file a response.

(g) *Ruling on motions.*—(1) *Appropriate protective orders.* After the time for filing a response to a motion to compel pursuant to this section has expired, the presiding officer shall rule promptly on any such motion. The presiding officer may deny, grant in part, or otherwise modify any request for the production of documents, if he determines that a discovery request, or any one or more of its terms, seeks to obtain the production of documents that are privileged or otherwise not within the scope of permissible discovery under § 1209.29(b), and may issue appropriate protective orders, upon such conditions as justice may require.

(2) *No stay.* The pendency of a motion to strike or limit discovery, or to compel the production of any document, shall not stay or continue the proceeding, unless otherwise ordered by the presiding officer. Notwithstanding any other provision in this part, the presiding officer may not release, or order any party to produce, any document withheld on the basis of privilege, if the withholding party has stated to the presiding officer its intention to file with the Director a timely motion for interlocutory review of the presiding officer's privilege determination or order to produce the documents, until the Director has rendered a decision on the motion for interlocutory review.

(3) *Interlocutory review by the Director.* Interlocutory review of a privilege determination or document discovery subpoena of the presiding officer shall be in accordance with § 1209.33. To the extent necessary to rule promptly on such matters, the Director may request that the presiding officer provide additional information from the record. As provided by § 1209.33 of this part, a pending interlocutory review of a privilege determination or document discovery subpoena shall not stay the proceedings, unless otherwise ordered by the presiding officer or the Director.

(h) *Enforcement of document discovery subpoenas.*—(1) *Authority.* If the presiding officer or Director issues a subpoena compelling production of documents by a party in a proceeding under this part, in the event of noncompliance with the subpoena and to the extent authorized by section 1379D(c)(1) of the Safety and Soundness Act (12 U.S.C. 4641(c)(1)), the Director or the subpoenaing party may apply to the appropriate United States district court for an order requiring compliance with the subpoena.

(2) *United States district court jurisdiction.* As provided by section 1379D(c)(2) of the Safety and Soundness Act (12 U.S.C. 4641(c)(2)), the appropriate United States district court has the jurisdiction and power to order and to require compliance with any discovery subpoena issued under this part.

(3) *No stay; sanctions.* The judicial enforcement of a discovery subpoena shall not operate as a stay of the proceedings, unless the presiding officer or the Director orders a stay of such duration as the presiding officer or Director may find reasonable and in the best interest of the parties or as justice may require. A party's right to seek judicial enforcement of a subpoena shall not in any manner limit the sanctions that may be imposed by the presiding officer or Director against a party who fails to produce or induces another to fail to produce subpoenaed documents.

§ 1209.31 Document discovery subpoenas to non-parties.

(a) *General rules.*—(1) *Application for subpoena.* As provided under this part, any party may apply to the presiding officer for the issuance of a document discovery subpoena addressed to any person who is not a party to the proceeding. The application must contain the proposed document subpoena, and a brief statement of facts demonstrating that the documents are materially relevant to the charges and issues presented in the proceeding and the reasonableness of the scope of the document request. The subpoenaing party shall specify a reasonable time, place, and manner for production in response to the subpoena, and state its unequivocal intention to pay for the production of the documents as provided in this part.

(2) *Service of subpoena.* A party shall apply for a document subpoena under this section only within the time period during which such party could serve a discovery request under § 1209.30 of this part. The party obtaining the document subpoena is responsible for serving it on the subpoenaed person and for serving copies on all other parties. Document subpoenas may be served in the District of Columbia, or any State, Territory, possession, or other place subject to the jurisdiction of the United States, or as otherwise provided by law.

(3) *Presiding officer's discretion.* The presiding officer shall issue promptly any document subpoena applied for under this section subject to the application conditions set forth in this section and his or her discretion. If the presiding officer determines that the application does not set forth a valid basis for the issuance of the requested document subpoena, or that any of its terms are unreasonable, oppressive, excessive in scope, unduly burdensome, or otherwise objectionable under § 1209.29(b), he may refuse to issue the requested document subpoena or may issue it in a modified form upon such additional conditions as may be determined by the presiding officer.

(b) *Motion to quash or modify.*—(1) *Limited appearance.* Any non-party to a pending proceeding to whom a document subpoena is directed may enter a limited appearance, through a representative or on his or her own behalf, before the presiding officer to file with the presiding officer a motion to quash or modify such subpoena, accompanied by a statement of the basis for quashing or modifying the subpoena.

(2) *Objections.* Any motion to quash or modify a document subpoena must be filed on the same basis, including the assertion of any privileges, upon which

a party could object to a discovery document request under § 1209.30 and during the same time limits during which such an objection could be filed.

(3) *Responses and replies.* The party who obtained the subpoena may respond to such motion within 10 days of service of the motion; the response shall be served on the non-party in accordance with this part. Absent express leave of the presiding officer, no other party may respond to the non-party's motion. The non-party may file a reply within five days of service of a response.

(4) *No stay.* A non-party's right to seek to quash or modify a document subpoena shall not stay the proceeding, or limit in any manner the sanctions that may be imposed by the presiding officer against a party who induces another to fail to produce any such subpoenaed documents. No party may rely upon the pendency of a non-party's motion to quash or modify a document subpoena to excuse performance of any action required of that party under this part.

(c) *Enforcing document subpoenas to non-parties.*—(1) *Application for enforcement of subpoena.* If a non-party fails to comply with any subpoena issued pursuant to this section or with any order of the presiding officer that directs compliance with all or any portion of a document subpoena issued pursuant to this section, the subpoenaing party or any other aggrieved party to the proceeding may, to the extent authorized by section 1379D(c) of the Safety and Soundness Act (12 U.S.C. 4641(c)), apply to an appropriate United States district court for an order requiring compliance with the subpoena.

(2) *No stay.* A party's right to seek district court enforcement of a non-party document production subpoena under this section shall not automatically stay an enforcement proceeding under of the Safety and Soundness Act.

(3) *Sanctions.* A party's right to seek district court enforcement of a non-party document subpoena shall in no way limit the sanctions that may be imposed by the presiding officer on a party who induces another to fail to comply with any subpoena issued under this section.

§ 1209.32 Deposition of witness unavailable for hearing.

(a) *General rules.* (1) If a witness will not be available for the hearing, a party desiring to preserve that witness's testimony for the record may apply to the presiding officer in accordance with the procedures set forth in paragraph (a)(2) of this section for the issuance of a subpoena or subpoena *duces tecum* requiring attendance of the witness at a deposition for the purpose of preserving that witness's testimony. The presiding officer may issue a deposition subpoena under this section upon a showing that:

(i) The witness will be unable to attend or may be prevented from attending the testimonial phase of the hearing because of age, sickness, or infirmity, or will be otherwise unavailable;

(ii) The subpoenaing party did not cause or contribute to the unavailability of the witness for the hearing;

(iii) The witness has personal knowledge and the testimony is reasonably expected to be materially relevant to claims, defenses, or matters determined to be at issue in the proceeding; and

(iv) Taking the deposition will not result in any undue burden to any other party and will not cause undue delay of the proceeding.

(2) The application must contain a proposed deposition subpoena and a brief statement of the reasons for the issuance of the subpoena. The subpoena must name the witness whose deposition is to be taken and specify the time and place for taking the deposition. A deposition subpoena may require the witness to be deposed anywhere within the United States, or its Territories and possessions, in which that witness resides or has a regular place of employment or such other convenient place as the presiding officer shall fix.

(3) Subpoenas must be issued promptly upon request, unless the presiding officer determines that the request fails to set forth a valid basis under this section for its issuance. Before making a determination that there is no valid basis for issuing the subpoena, the presiding officer shall require a written response from the party requesting the subpoena or require attendance at a conference to determine whether there is a valid basis upon which to issue the requested subpoena.

(4) The party obtaining a deposition subpoena is responsible for serving it on the witness and for serving copies on all parties. Unless the presiding officer orders otherwise, no deposition under this section shall be taken on fewer than 10 days' notice to the witness and all parties. Deposition subpoenas may be served anywhere within the United States or its Territories and possessions, or on any person doing business anywhere within the United States or its Territories and possessions, or as otherwise permitted by law.

(b) *Objections to deposition subpoenas.* (1) The witness and any party who has not had an opportunity to oppose a deposition subpoena issued under this section may file a motion with the presiding officer under § 1209.28 of this part to quash or modify the subpoena prior to the time for compliance specified in the subpoena, but not more than 10 days after service of the subpoena.

(2) A statement of the basis for the motion to quash or modify a subpoena issued under this section must accompany the motion. The motion must be served on all parties.

(c) *Procedure upon deposition.* (1) Each witness testifying pursuant to a deposition subpoena must be duly sworn and each party shall have the right to examine the witness. Objections to questions or documents must be in short form, stating the grounds for the objection. Failure to object to questions or documents is not deemed a waiver except where the ground for objection might have been avoided if the objection had been presented timely. All questions, answers, and objections must be recorded and transcribed. Videotaped depositions must be transcribed for the record; copies and transcriptions must be supplied to each party.

(2) Any party may move before the presiding officer for an order compelling the witness to answer any questions the witness has refused to answer or submit any evidence that, during the deposition, the witness has refused to submit.

(3) The deposition transcript must be subscribed by the witness, unless the parties and the witness, by stipulation, have waived the signing, or the witness is ill, cannot be found, or has refused to sign. If the deposition is not subscribed by the witness, the court reporter taking the deposition shall certify that the transcript is a true and complete transcript of the deposition.

(d) *Enforcing subpoenas.* If a subpoenaed person fails to comply with any subpoena issued pursuant to this section or with any order of the presiding officer made upon motion under paragraph (c)(2) of this section, the subpoenaing party or other aggrieved party may, to the extent authorized by section 1379D(c) of the Safety and Soundness Act (12 U.S.C. 4641(c)), apply to an appropriate United States district court for an order requiring compliance with the portions of the subpoena that the presiding officer has ordered enforced. A party's right to seek court enforcement of a deposition subpoena in no way limits the sanctions that may be imposed by the presiding officer on a party who fails to comply with or induces a failure to comply with a subpoena issued under this section.

§ 1209.33 Interlocutory review.

(a) *General rule.* The Director may review a ruling of the presiding officer prior to the certification of the record to the Director only in accordance with the procedures set forth in this section.

(b) *Scope of review.* The Director may exercise interlocutory review of a ruling of the presiding officer if the Director finds that:

(1) The ruling involves a controlling question of law or policy as to which substantial grounds exist for a difference of opinion;

(2) Immediate review of the ruling may materially advance the ultimate termination of the proceeding;

(3) Subsequent modification of the ruling at the conclusion of the proceeding would be an inadequate remedy; or

(4) Subsequent modification of the ruling would cause unusual delay or expense.

(c) *Procedure.* Any motion for interlocutory review shall be filed by a party with the presiding officer within 10 days of his or her ruling. Upon the expiration of the time for filing all responses, the presiding officer shall refer the matter to the Director for final disposition. In referring the matter to the Director, the presiding officer may indicate agreement or disagreement with the asserted grounds for interlocutory review of the ruling in question.

(d) *Suspension of proceeding.* Neither a request for interlocutory review nor any disposition of such a request by the Director under this section suspends or stays the proceeding unless otherwise ordered by the presiding officer or the Director.

§ 1209.34 Summary disposition.

(a) *In general.* The presiding officer shall recommend that the Director issue a final order granting a motion for summary disposition if the undisputed pleaded facts, admissions, affidavits, stipulations, documentary evidence, matters as to which official notice may be taken, and any other evidentiary materials properly submitted in connection with a motion for summary disposition show that:

(1) There is no genuine issue as to any material fact; and

(2) The movant is entitled to a decision in its favor as a matter of law.

(b) *Filing of motions and responses.* (1) Any party who believes there is no genuine issue of material fact to be determined and that such party is entitled to a decision as a matter of law may move at any time for summary disposition in its favor of all or any part of the proceeding. Any party, within 30 days after service of such motion or within such time period as allowed by the presiding officer, may file a response to such motion.

(2) A motion for summary disposition must be accompanied by a statement of material facts as to which the movant contends there is no genuine issue. Such motion must be supported by documentary evidence, which may take the form of admissions in pleadings, stipulations, depositions, investigatory depositions, transcripts, affidavits, and any other evidentiary materials that the movant contends support its position. The motion must also be accompanied by a brief containing the points and authorities in support of the contention of the movant. Any party opposing a motion for summary disposition must file a statement setting forth those material facts as to which the party contends a genuine dispute exists. Such opposition must be supported by evidence of the same type as that submitted with the motion for summary disposition and a brief containing the points and authorities in support of the contention that summary disposition would be inappropriate.

(c) *Hearing on motion.* At the request of any party or on his or her own motion, the presiding officer may hear oral argument on the motion for summary disposition.

(d) *Decision on motion.* Following receipt of a motion for summary disposition and all responses thereto, the presiding officer shall determine whether the movant is entitled to summary disposition. If the presiding officer determines that summary disposition is warranted, the presiding officer shall submit a recommended decision to that effect to the Director, under § 1209.53. If the presiding officer finds that the moving party is not entitled to summary disposition, the presiding officer shall make a ruling denying the motion.

§ 1209.35 Partial summary disposition.

If the presiding officer determines that a party is entitled to summary disposition as to certain claims only, he shall defer submitting a recommended decision to the Director as to those claims. A hearing on the remaining issues must be ordered. Those claims for which the presiding officer has determined that summary disposition is warranted will be addressed in the recommended decision filed at the conclusion of the hearing.

§ 1209.36 Scheduling and pre-hearing conferences.

(a) *Scheduling conference.* After service of a notice of charges commencing a proceeding under this part, the presiding officer shall order the representative(s) of record for each party, and any party not so represented who is appearing *pro se,* to meet in person or to confer by telephone at a specified time within 30 days of service of such notice for the purpose of setting the time and place of the testimonial hearing on the record to be held within the District of Columbia and scheduling the course and conduct of the proceeding (the ''scheduling conference''). The identification of potential witnesses, the time for and manner of discovery, and the exchange of any pre-hearing materials including witness lists, statements of issues, stipulations, exhibits, and any other materials also may be determined at the scheduling conference.

(b) *Pre-hearing conferences.* The presiding officer may, in addition to the scheduling conference, on his or her own motion or at the request of any party, direct representatives for the parties to meet with (in person or by telephone) at a pre-hearing conference to address any or all of the following:

(1) Simplification and clarification of the issues;

(2) Stipulations, admissions of fact and the contents, authenticity and admissibility into evidence of documents;

(3) Matters of which official notice may be taken;

(4) Limitation of the number of witnesses;

(5) Summary disposition of any or all issues;

(6) Resolution of discovery issues or disputes;

(7) Amendments to pleadings; and

(8) Such other matters as may aid in the orderly disposition of the proceeding.

(c) *Transcript.* The presiding officer, in his or her discretion, may require that a scheduling or pre-hearing conference be recorded by a court reporter. Any transcript of the conference and any materials filed, including orders, become part of the record of the proceeding. A party may obtain a copy of a transcript at such party's expense.

(d) *Scheduling or pre-hearing orders.* Within a reasonable time following the conclusion of the scheduling conference or any pre-hearing conference, the presiding officer shall serve on each party an order setting forth any agreements reached and any procedural determinations made.

§ 1209.37 Pre-hearing submissions.

(a) *General.* Within the time set by the presiding officer, but in no case later than 10 days before the start of the

hearing, each party shall serve on every other party the serving party's:

(1) Pre-hearing statement;

(2) Final list of witnesses to be called to testify at the hearing, including name and address of each witness, and a short summary of the expected testimony of each witness;

(3) List of the exhibits to be introduced at the hearing along with a copy of each exhibit; and

(4) Stipulations of fact, if any.

(b) *Effect of failure to comply.* No witness may testify and no exhibit may be introduced at the hearing that is not listed in the pre-hearing submissions pursuant to paragraph (a) of this section, except for good cause shown.

§ 1209.38 Hearing subpoenas.

(a) *Issuance.* (1) Upon application of a party to the presiding officer showing relevance and reasonableness of scope of the testimony or other evidence sought, the presiding officer may issue a subpoena or a subpoena *duces tecum* requiring the attendance of a witness at the hearing or the production of documentary or physical evidence at such hearing. The application for a hearing subpoena must also contain a proposed subpoena specifying the attendance of a witness or the production of evidence from any place within the United States or its territories and possessions, or as otherwise provided by law, at the designated place where the hearing is being conducted. The party making the application shall serve a copy of the application and the proposed subpoena on every other party.

(2) A party may apply for a hearing subpoena at any time before the commencement of or during a hearing. During a hearing, a party may make an application for a subpoena orally on the record before the presiding officer.

(3) The presiding officer shall promptly issue any hearing subpoena applied for under this section; except that, if the presiding officer determines that the application does not set forth a valid basis for the issuance of the subpoena, or that any of its terms are unreasonable, oppressive, excessive in scope, or unduly burdensome, he may refuse to issue the subpoena or may issue the subpoena in a modified form upon any conditions consistent with subpart C of this part. Upon issuance by the presiding officer, the party making the application shall serve the subpoena on the person named in the subpoena and on each party.

(b) *Motion to quash or modify.* (1) Any person to whom a hearing subpoena is directed or any party may file a motion to quash or modify such subpoena, accompanied by a statement of the basis for quashing or modifying the subpoena. The movant must serve the motion on each party and on the person named in the subpoena. Any party may respond to the motion within 10 days of service of the motion.

(2) Any motion to quash or modify a hearing subpoena must be filed prior to the time specified in the subpoena for compliance, but no more than 10 days after the date of service of the subpoena upon the movant.

(c) *Enforcing subpoenas.* If a subpoenaed person fails to comply with any subpoena issued pursuant to this section or any order of the presiding officer that directs compliance with all or any portion of a hearing subpoena, the subpoenaing party or any other aggrieved party may seek enforcement of the subpoena pursuant to § 1209.31. A party's right to seek court enforcement of a hearing subpoena shall in no way limit the sanctions that may be imposed by the presiding officer on a party who induces a failure to comply with subpoenas issued under this section.

§§ 1209.39 through 1209.49 [Reserved].

§ 1209.50 Conduct of hearings.

(a) *General rules.*—(1) *Conduct.* Hearings shall be conducted in accordance with chapter 5 of Title 5 and other applicable law and so as to provide a fair and expeditious presentation of the relevant disputed issues. Except as limited by this subpart, each party has the right to present its case or defense by oral and documentary evidence and to conduct such cross examination as may be required for full disclosure of the facts.

(2) *Order of hearing.* FHFA counsel of record shall present its case-in-chief first, unless otherwise ordered by the presiding officer or unless otherwise expressly specified by law or regulation. FHFA counsel of record shall be the first party to present an opening statement and a closing statement and may make a rebuttal statement after the respondent's closing statement. If there are multiple respondents, respondents may agree among themselves as to the order of presentation of their cases, but if they do not agree, the presiding officer shall fix the order.

(3) *Examination of witnesses.* Only one representative for each party may conduct an examination of a witness, except that in the case of extensive direct examination, the presiding officer may permit more than one representative for the party presenting the witness to conduct the examination. A party may have one representative conduct the direct examination and another representative conduct re-direct examination of a witness, or may have one representative conduct the cross examination of a witness and another representative conduct the re-cross examination of a witness.

(4) *Stipulations.* Unless the presiding officer directs otherwise, all documents that the parties have stipulated as admissible shall be admitted into evidence upon commencement of the hearing.

(b) *Transcript.* The hearing shall be recorded and transcribed. The transcript shall be made available to any party upon payment of the cost thereof. The presiding officer shall have authority to order the record corrected, either upon motion to correct, upon stipulation of the parties, or following notice to the parties upon the presiding officer's own motion.

§ 1209.51 Evidence.

(a) *Admissibility.* (1) Except as is otherwise set forth in this section, relevant, material, and reliable evidence that is not unduly repetitive is admissible to the fullest extent authorized by the Administrative Procedure Act (5 U.S.C. 552 *et seq.*) and other applicable law.

(2) Evidence that would be admissible under the Federal Rules of Evidence is admissible in a proceeding conducted pursuant to subpart C of this part.

(3) Evidence that would be inadmissible under the Federal Rules of Evidence may not be deemed or ruled to be inadmissible in a proceeding conducted pursuant to subpart C of this part if such evidence is relevant, material, probative and reliable, and not unduly repetitive.

(b) *Official notice.* (1) Official notice may be taken of any material fact that may be judicially noticed by a United States district court and of any materially relevant information in the official public records of any Federal or State government agency.

(2) All matters officially noticed by the presiding officer or the Director shall appear on the record.

(3) If official notice is requested of any material fact, the parties, upon timely request, shall be afforded an opportunity to object.

(c) *Documents.* (1) A duplicate copy of a document is admissible to the same extent as the original, unless a genuine issue is raised as to whether the copy is in some material respect not a true and legible copy of the original.

(2) Subject to the requirements of paragraph (a)(1) of this section, any document, including a report of examination, oversight activity,

inspection, or visitation prepared by FHFA or by another Federal or State financial institution's regulatory agency, is admissible either with or without a sponsoring witness.

(3) Witnesses may use existing or newly created charts, exhibits, calendars, calculations, outlines, or other graphic material to summarize, illustrate, or simplify the presentation of testimony. Such materials may, subject to the presiding officer's discretion, be used with or without being admitted into evidence.

(d) *Objections.* (1) Objections to the admissibility of evidence must be timely made and rulings on all objections must appear in the record.

(2) When an objection to a question or line of questioning is sustained, the examining representative of record may make a specific proffer on the record of what he or she expected to prove by the expected testimony of the witness. The proffer may be by representation of the representative or by direct interrogation of the witness.

(3) The presiding officer shall retain rejected exhibits, adequately marked for identification, for the record and transmit such exhibits to the Director.

(4) Failure to object to admission of evidence or to any ruling constitutes a waiver of the objection.

(e) *Stipulations.* The parties may stipulate as to any relevant matters of fact or the authentication of any document to be admitted into evidence. Such stipulations must be received in evidence at a hearing, are binding on the parties with respect to the matters stipulated, and shall be made part of the record.

(f) *Depositions of unavailable witnesses.* (1) If a witness is unavailable to testify at a hearing and that witness has testified in a deposition in accordance with § 1209.32, a party may offer as evidence all or any part of the transcript of the deposition, including deposition exhibits, if any.

(2) Such deposition transcript is admissible to the same extent that testimony would have been admissible had that person testified at the hearing, provided that if a witness refused to answer proper questions during the deposition the presiding officer may, on that basis, limit the admissibility of the deposition in any manner that justice requires.

(3) Only those portions of a deposition or related exhibits received in evidence at the hearing in accordance with this section shall constitute a part of the record.

§ 1209.52 Post-hearing filings.

(a) *Proposed findings and conclusions and supporting briefs.* (1) Using the same method of service for each party, the presiding officer shall serve notice upon each party that the certified transcript, together with all hearing exhibits and exhibits introduced but not admitted into evidence at the hearing, has been filed with the presiding officer. Any party may file with the presiding officer proposed findings of fact, proposed conclusions of law, and a proposed order within 30 days after the parties have received notice that the transcript has been filed with the presiding officer, unless otherwise ordered by the presiding officer.

(2) Proposed findings and conclusions must be supported by citation to any relevant authorities and by page and line references to any relevant portions of the record. A post-hearing brief may be filed in support of proposed findings and conclusions, either as part of the same document or in a separate document.

(3) A party is deemed to have waived any issue not raised in proposed findings or conclusions timely filed by that party.

(b) *Reply briefs.* Reply briefs may be filed within 15 days after the date on which the parties' proposed findings and conclusions and proposed order are due. Reply briefs shall be limited strictly to responding to new matters, issues, or arguments raised by another party in papers filed in the proceeding. A party who has not filed proposed findings of fact and conclusions of law or a post-hearing brief may not file a reply brief.

(c) *Simultaneous filing required.* The presiding officer shall not order the filing by any party of any brief or reply brief supporting proposed findings and conclusions in advance of the other party's filing of its brief.

§ 1209.53 Recommended decision and filing of record.

(a) *Filing of recommended decision and record.* Within 45 days after expiration of the time allowed for filing reply briefs under § 1209.52(b), the presiding officer shall file with and certify to the Director, for decision, the record of the proceeding. The record must include the presiding officer's recommended decision, recommended findings of fact and conclusions of law, and proposed order; all pre-hearing and hearing transcripts, exhibits and rulings; and the motions, briefs, memoranda, and other supporting papers filed in connection with the hearing. The presiding officer shall serve upon each party the recommended decision, recommended findings and conclusions, and proposed order.

(b) *Filing of index.* At the same time the presiding officer files with and certifies to the Director, for final determination, the record of the proceeding, the presiding officer shall furnish to the Director a certified index of the entire record of the proceeding. The certified index shall include, at a minimum, an entry for each paper, document or motion filed with the presiding officer in the proceeding, the date of the filing, and the identity of the filer. The certified index shall also include an exhibit index containing, at a minimum, an entry consisting of exhibit number and title or description for: each exhibit introduced and admitted into evidence at the hearing; each exhibit introduced but not admitted into evidence at the hearing; each exhibit introduced and admitted into evidence after the completion of the hearing; and each exhibit introduced but not admitted into evidence after the completion of the hearing.

§ 1209.54 Exceptions to recommended decision.

(a) *Filing exceptions.* Within 30 days after service of the recommended decision, recommended findings and conclusions, and proposed order under § 1209.53, a party may file with the Director written exceptions to the presiding officer's recommended decision, recommended findings and conclusions, and proposed order; to the admission or exclusion of evidence; or to the failure of the presiding officer to make a ruling proposed by a party. A supporting brief may be filed at the time the exceptions are filed, either as part of the same document or in a separate document.

(b) *Effect of failure to file or raise exceptions.* (1) Failure of a party to file exceptions to those matters specified in paragraph (a) of this section within the time prescribed is deemed a waiver of objection thereto.

(2) No exception need be considered by the Director if the party taking exception had an opportunity to raise the same objection, issue, or argument before the presiding officer and failed to do so.

(c) *Contents.* (1) All exceptions and briefs in support of such exceptions must be confined to the particular matters in or omissions from the presiding officer's recommendations to which that party takes exception.

(2) All exceptions and briefs in support of exceptions must set forth page or paragraph references to the specific parts of the presiding officer's recommendations to which exception is

taken, the page or paragraph references to those portions of the record relied upon to support each exception, and the legal authority relied upon to support each exception. Exceptions and briefs in support shall not exceed a total of 30 pages, except by leave of the Director on motion.

(3) One reply brief may be submitted by each party opposing the exceptions within 10 days of service of exceptions and briefs in support of exceptions. Reply briefs shall not exceed 15 pages, except by leave of the Director on motion.

§ 1209.55 Review by Director.

(a) *Notice of submission to the Director.* When the Director determines that the record in the proceeding is complete, the Director shall serve notice upon the parties that the case has been submitted to the Director for final decision.

(b) *Oral argument before the Director.* Upon the initiative of the Director or on the written request of any party filed with the Director within the time for filing exceptions, the Director may order and hear oral argument on the recommended findings, conclusions, decision and order of the presiding officer. A written request by a party must show good cause for oral argument and state reasons why arguments cannot be presented adequately in writing. A denial of a request for oral argument may be set forth in the Director's final decision. Oral argument before the Director must be transcribed.

(c) *Director's final decision and order.* (1) Decisional employees may advise and assist the Director in the consideration and disposition of the case. The final decision of the Director will be based upon review of the entire record of the proceeding, except that the Director may limit the issues to be reviewed to those findings and conclusions to which opposing arguments or exceptions have been filed by the parties.

(2) The Director shall render a final decision and issue an appropriate order within 90 days after notification to the parties that the case has been submitted for final decision, unless the Director orders that the action or any aspect thereof be remanded to the presiding officer for further proceedings. Copies of the final decision including findings of fact and an appropriate order of the Director shall be served upon each party to the proceeding and as otherwise required by statute.

(3) The Director may modify, terminate, or set aside an order in accordance with section 1373(b)(2) of the Safety and Soundness Act (12 U.S.C. 4633(b)(2)).

§ 1209.56 Exhaustion of administrative remedies.

To exhaust administrative remedies as to any issue on which a party disagrees with the presiding officer's recommendations, a party must file exceptions with the Director under § 1209.54 of this part. A party must exhaust administrative remedies as a precondition to seeking judicial review of any final decision and order issued under this part.

§ 1209.57 Judicial review; no automatic stay.

(a) *Judicial review.* Judicial review of any final order of the Director shall be exclusively as provided by section 1374 of the Safety and Soundness Act (12 U.S.C. 4634).

(b) *No automatic stay.* Commencement of proceedings for judicial review of a final decision and order of the Director may not, unless specifically ordered by the Director or a reviewing court, operate as a stay of any order issued by the Director. The Director may, in his or her discretion and on such terms as he finds just, stay the effectiveness of all or any part of an order of the Director pending a final decision on a petition for review of that order.

§§ 1209.58 through 1209.69 [Reserved].

Subpart D—Parties and Representational Practice Before the Federal Housing Finance Agency; Standards of Conduct

§ 1209.70 Scope.

Subpart D of this part contains rules governing practice by parties or their representatives before FHFA. This subpart addresses the imposition of sanctions by the presiding officer or the Director against parties or their representatives in an adjudicatory proceeding under this part. This subpart also covers other disciplinary sanctions—censure, suspension, or disbarment—against individuals who appear before FHFA in a representational capacity either in an adjudicatory proceeding under this part or in any other matters connected with presentations to FHFA relating to a client's or other principal's rights, privileges, or liabilities. This representation includes, but is not limited to, the practice of attorneys and accountants. Employees of FHFA are not subject to disciplinary proceedings under this subpart.

§ 1209.71 Definitions.

Practice before FHFA for the purposes of subpart D of this part, includes, but is not limited to, transacting any business with FHFA as counsel of record, representative, or agent for any other person, unless the Director orders otherwise. Practice before FHFA also includes the preparation of any statement, opinion, or other paper by a counsel, representative or agent that is filed with FHFA in any certification, notification, application, report, or other document, with the consent of such counsel, representative, or agent. Practice before FHFA does not include work prepared for a regulated entity or entity-affiliated party solely at the request of such party for use in the ordinary course of its business.

§ 1209.72 Appearance and practice in adjudicatory proceedings.

(a) *Appearance before FHFA or a presiding officer.*—(1) *By attorneys.* A party may be represented by an attorney who is a member in good standing of the bar of the highest court of any State, commonwealth, possession or territory of the United States, or the District of Columbia, and who is not currently suspended or disbarred from practice before FHFA.

(2) *By non-attorneys.* An individual may appear on his or her own behalf, *pro se.* A member of a partnership may represent the partnership and a duly authorized officer, director, employee, or other agent of any corporation or other entity not specifically listed herein may represent such corporation or other entity; provided that such officer, director, employee, or other agent is not currently suspended or disbarred from practice before FHFA. A duly authorized officer or employee of any Government unit, agency, or authority may represent that unit, agency, or authority.

(b) *Notice of appearance.* Any person appearing in a representative capacity on behalf of a party, including FHFA, shall execute and file a notice of appearance with the presiding officer at or before the time such person submits papers or otherwise appears on behalf of a party in the adjudicatory proceeding. Such notice of appearance shall include a written declaration that the individual is currently qualified as provided in paragraph (a)(1) or (a)(2) of this section and is authorized to represent the particular party. By filing a notice of appearance on behalf of a party in an adjudicatory proceeding, the representative thereby agrees and represents that he is authorized to accept service on behalf of the represented party and that, in the event

of withdrawal from representation, he or she will, if required by the presiding officer, continue to accept service until a new representative has filed a notice of appearance or until the represented party indicates that he or she will proceed on a *pro se* basis. Unless the representative filing the notice is an attorney, the notice of appearance shall also be executed by the person represented or, if the person is not an individual, by the chief executive officer, or duly authorized officer of that person.

§ 1209.73 Conflicts of interest.

(a) *Conflict of interest in representation.* No representative shall represent another person in an adjudicatory proceeding if it reasonably appears that such representation may be limited materially by that representative's responsibilities to a third person or by that representative's own interests. The presiding officer may take corrective measures at any stage of a proceeding to cure a conflict of interest in representation, including the issuance of an order limiting the scope of representation or disqualifying an individual from appearing in a representative capacity for the duration of the proceeding.

(b) *Certification and waiver.* If any person appearing as counsel or other representative represents two or more parties to an adjudicatory proceeding, or also represents a non-party on a matter relevant to an issue in the proceeding, that representative must certify in writing at the time of filing the notice of appearance required by § 1209.72 of this part as follows:

(1) That the representative has personally and fully discussed the possibility of conflicts of interest with each affected party and non-party; and

(2) That each affected party and non-party waives any right it might otherwise have had to assert any known conflicts of interest or to assert any non-material conflicts of interest during the course of the proceeding.

§ 1209.74 Sanctions.

(a) *General rule.* Appropriate sanctions may be imposed during the course of any proceeding when any party or representative of record has acted or failed to act in a manner required by applicable statute, regulation, or order, and that act or failure to act:

(1) Constitutes contemptuous conduct, which includes dilatory, obstructionist, egregious, contumacious, unethical, or other improper conduct at any phase of any proceeding, hearing, or appearance before a presiding officer or the Director;

(2) Has caused some other party material and substantive injury, including, but not limited to, incurring expenses including attorney's fees or experiencing prejudicial delay;

(3) Is a clear and unexcused violation of an applicable statute, regulation, or order; or

(4) Has delayed the proceeding unduly.

(b) *Sanctions.* Sanctions that may be imposed include, but are not limited to, any one or more of the following:

(1) Issuing an order against a party;

(2) Rejecting or striking any testimony or documentary evidence offered, or other papers filed, by the party;

(3) Precluding the party from contesting specific issues or findings;

(4) Precluding the party from offering certain evidence or from challenging or contesting certain evidence offered by another party;

(5) Precluding the party from making a late filing or conditioning a late filing on any terms that may be just; or

(6) Assessing reasonable expenses, including attorney's fees, incurred by any other party as a result of the improper action or failure to act.

(c) *Procedure for imposition of sanctions.* (1) The presiding officer, on the motion of any party, or on his or her own motion, and after such notice and responses as may be directed by the presiding officer, may impose any sanction authorized by this section. The presiding officer shall submit to the Director for final ruling any sanction that would result in a final order that terminates the case on the merits or is otherwise dispositive of the case.

(2) Except as provided in paragraph (d) of this section, no sanction authorized by this section, other than refusing to accept late papers, shall be imposed without prior notice to all parties and an opportunity for any representative or party against whom sanctions may be imposed to be heard. The presiding officer shall determine and direct the appropriate notice and form for such opportunity to be heard. The opportunity to be heard may be limited to an opportunity to respond verbally immediately after the act or inaction in question is noted by the presiding officer.

(3) For purposes of interlocutory review, motions for the imposition of sanctions by any party and the imposition of sanctions shall be treated the same as motions for any other ruling by the presiding officer.

(4) Nothing in this section shall be read to preclude the presiding officer or the Director from taking any other action or imposing any other restriction or sanction authorized by any applicable statute or regulation.

(d) *Sanctions for contemptuous conduct.* If, during the course of any proceeding, a presiding officer finds any representative or any individual representing themself to have engaged in contemptuous conduct, the presiding officer may summarily suspend that individual from participating in that or any related proceeding or impose any other appropriate sanction.

§ 1209.75 Censure, suspension, disbarment, and reinstatement.

(a) *Discretionary censure, suspension, and disbarment.* (1) The Director may censure any individual who practices or attempts to practice before FHFA or suspend or revoke the privilege to appear or practice before FHFA of such individual if, after notice of and opportunity for hearing in the matter, that individual is found by the Director—

(i) Not to possess the requisite qualifications or competence to represent others;

(ii) To be seriously lacking in character or integrity or to have engaged in material unethical or improper professional conduct;

(iii) To have caused unfair and material injury or prejudice to another party, such as prejudicial delay or unnecessary expenses including attorney's fees;

(iv) To have engaged in, or aided and abetted, a material and knowing violation of the Safety and Soundness Act, the Federal Home Loan Mortgage Corporation Act, the Federal National Mortgage Association Charter Act, or the rules or regulations issued under those statutes, or any other applicable law or regulation;

(v) To have engaged in contemptuous conduct before FHFA;

(vi) With intent to defraud in any manner, to have willfully and knowingly deceived, misled, or threatened any client or prospective client; or

(vii) Within the last 10 years, to have been convicted of an offense involving moral turpitude, dishonesty, or breach of trust, if the conviction has not been reversed on appeal. A conviction within the meaning of this paragraph shall be deemed to have occurred when the convicting court enters its judgment or order, regardless of whether an appeal is pending or could be taken and includes a judgment or an order on a plea of *nolo contendere* or on consent, regardless of whether a violation is admitted in the consent.

(2) Suspension or revocation on the grounds set forth in paragraphs (a)(1)(ii) through (vii) of this section shall only be ordered upon a further finding that the individual's conduct or character was sufficiently egregious as to justify suspension or revocation. Suspension or disbarment under this paragraph shall continue until the applicant has been reinstated by the Director for good cause shown or until, in the case of a suspension, the suspension period has expired.

(3) If the final order against the respondent is for censure, the individual may be permitted to practice before FHFA, but such individual's future representations may be subject to conditions designed to promote high standards of conduct. If a written letter of censure is issued, a copy will be maintained in FHFA's files.

(b) *Mandatory suspension and disbarment.* (1) Any counsel who has been and remains suspended or disbarred by a court of the United States or of any State, commonwealth, possession or territory of the United States, or the District of Columbia; any accountant or other licensed expert whose license to practice has been revoked in any State, commonwealth, possession or territory of the United States, or the District of Columbia; any person who has been and remains suspended or barred from practice by or before the Department of Housing and Urban Development, the Office of the Comptroller of the Currency, the Board of Governors of the Federal Reserve System, the Office of Thrift Supervision, the Federal Deposit Insurance Corporation, the National Credit Union Administration, the Federal Housing Finance Board, the Farm Credit Administration, the Securities and Exchange Commission, or the Commodity Futures Trading Commission is also suspended automatically from appearing or practicing before FHFA. A disbarment or suspension within the meaning of this paragraph shall be deemed to have occurred when the disbarring or suspending agency or tribunal enters its judgment or order, regardless of whether an appeal is pending or could be taken and regardless of whether a violation is admitted in the consent.

(2) A suspension or disbarment from practice before FHFA under paragraph (b)(1) of this section shall continue until the person suspended or disbarred is reinstated under paragraph (d)(2) of this section.

(c) *Notices to be filed.* (1) Any individual appearing or practicing before FHFA who is the subject of an order, judgment, decree, or finding of the types set forth in paragraph (b)(1) of this section shall file promptly with the Director a copy thereof, together with any related opinion or statement of the agency or tribunal involved.

(2) Any individual appearing or practicing before FHFA who is or within the last 10 years has been convicted of a felony or of a misdemeanor that resulted in a sentence of prison term or in a fine or restitution order totaling more than $5,000 promptly shall file a notice with the Director. The notice shall include a copy of the order imposing the sentence or fine, together with any related opinion or statement of the court involved.

(d) *Reinstatement.* (1) Unless otherwise ordered by the Director, an application for reinstatement for good cause may be made in writing by a person suspended or disbarred under paragraph (a)(1) of this section at any time more than three years after the effective date of the suspension or disbarment and, thereafter, at any time more than one year after the person's most recent application for reinstatement. An applicant for reinstatement hereunder may, in the Director's sole discretion, be afforded a hearing.

(2) An application for reinstatement for good cause by any person suspended or disbarred under paragraph (b)(1) of this section may be filed at any time, but not less than one year after the applicant's most recent application. An applicant for reinstatement for good cause hereunder may, in the Director's sole discretion, be afforded a hearing.

If, however, all the grounds for suspension or disbarment under paragraph (b)(1) of this section have been removed by a reversal of the order of suspension or disbarment or by termination of the underlying suspension or disbarment, any person suspended or disbarred under paragraph (b)(1) of this section may apply immediately for reinstatement and shall be reinstated by FHFA upon written application notifying FHFA that the grounds have been removed.

(e) *Conferences.*—(1) *General rule.* The FHFA counsel of record may confer with a proposed respondent concerning allegations of misconduct or other grounds for censure, disbarment, or suspension, regardless of whether a proceeding for censure, disbarment or suspension has been commenced. If a conference results in a stipulation in connection with a proceeding in which the individual is the respondent, the stipulation may be entered in the record at the request of either party to the proceeding.

(2) *Resignation or voluntary suspension.* In order to avoid the institution of or a decision in a disbarment or suspension proceeding, a person who practices before FHFA may consent to censure, suspension, or disbarment from practice. At the discretion of the Director, the individual may be censured, suspended, or disbarred in accordance with the consent offered.

(f) *Hearings under this section.* Hearings conducted under this section shall be conducted in substantially the same manner as other hearings under this part, except that in proceedings to terminate an existing FHFA suspension or disbarment order, the person seeking the termination of the order shall bear the burden of going forward with an application and with proof and that the Director may, in the Director's sole discretion, direct that any proceeding to terminate an existing suspension or disbarment by FHFA be limited to written submissions. All hearings held under this section shall be closed to the public unless the Director, on the Director's own motion or upon the request of a party, otherwise directs.

§§ 1209.76 through 1209.79 [Reserved].

Subpart E—Civil Money Penalty Inflation Adjustments

§ 1209.80 Inflation adjustments.

The maximum amount of each civil money penalty within FHFA's jurisdiction, as set by the Safety and Soundness Act and thereafter adjusted in accordance with the Inflation Adjustment Act, on a recurring four-year cycle, is as follows:

U.S. Code citation	Description	Adjusted maximum penalty amount
12 U.S.C. 4636(b)(1)	First Tier	$10,000
12 U.S.C. 4636(b)(2)	Second Tier	50,000
12 U.S.C. 4636(b)(4)	Third Tier (Entity-Affiliated party)	2,000,000

U.S. Code citation	Description	Adjusted maximum penalty amount
12 U.S.C. 4636(b)(4)	Third Tier (Regulated entity)	2,000,000

§ 1209.81 Applicability.

The inflation adjustments set out in § 1209.80 shall apply to civil money penalties assessed in accordance with the provisions of the Safety and Soundness Act, 12 U.S.C. 4636, and subparts B and C of this part, for violations occurring after the effective date of July 30, 2008.

§§ 1209.82 through 1209.99 [Reserved].

Subpart F—Suspension or Removal of an Entity-Affiliated Party Charged With Felony

§ 1209.100 Scope.

Subpart F of this part applies to informal hearings afforded to any entity-affiliated party who has been suspended, removed, or prohibited from further participation in the business affairs of a regulated entity by a notice or order issued by the Director under section 1377(h) of the Safety and Soundness Act (12 U.S.C. 4636a(h)).

§ 1209.101 Suspension, removal, or prohibition.

(a) *Notice of suspension or prohibition.* (1) As provided by section 1377(h)(1) of the Safety and Soundness Act (12 U.S.C. 4636a(h)(1)), if an entity-affiliated party is charged in any information, indictment, or complaint, with the commission of or participation in a crime that involves dishonesty or breach of trust that is punishable by imprisonment for more than one year under State or Federal law, the Director may, if continued service or participation by such party may pose a threat to the regulated entity or impair public confidence in the regulated entity, by written notice served upon such party, suspend such party from office or prohibit such party from further participation in any manner in the conduct of the affairs of any regulated entity.

(2) In accordance with section 1377(h)(1) of the Safety and Soundness Act (12 U.S.C. 4636a(h)(1)), the notice of suspension or prohibition is effective upon service. A copy of such notice will be served on the relevant regulated entity. The notice will state the basis for the suspension and the right of the party to request an informal hearing as provided in § 1209.102. The suspension or prohibition is to remain in effect until the information, indictment, or complaint is finally disposed of, or until terminated by the Director, or otherwise as provided in paragraph (c) of this section.

(b) *Order of removal or prohibition.* As provided by section 1377(h)(2) of the Safety and Soundness Act (12 U.S.C. 4636a(h)(2)), at such time as a judgment of conviction is entered (or pretrial diversion or other plea bargain is agreed to) in connection with a crime as referred to above in paragraph (a) (the ''conviction''), and the conviction is no longer subject to appellate review, the Director may, if continued service or participation by such party may pose a threat to the regulated entity or impair public confidence in the regulated entity, issue an order removing such party from office or prohibiting such party from further participation in any manner in the conduct of the affairs of the regulated entity without the prior written consent of the Director. A copy of such order will be served on the relevant regulated entity, at which time the entity-affiliated party shall immediately cease to be a director or officer of the regulated entity. The notice will state the basis for the removal or prohibition and the right of the party to request a hearing as provided in § 1209.102.

(c) *Effective period.* Unless terminated by the Director, a notice of suspension or order of removal issued under section 1377(h)(1) or (2) of the Safety and Soundness Act (12 U.S.C. 4636a(h)(1), (2)) shall remain effective and outstanding until the completion of any informal hearing or appeal provided under section 1377(h)(4) of the Safety and Soundness Act (12 U.S.C. 4636a(h)(4)). The pendency of an informal hearing, if any, does not stay any notice of suspension or prohibition or order of removal or prohibition under subpart F of this part.

(d) *Effect of acquittal.* As provided by section 1377(h)(2)(B)(ii) of the Safety and Soundness Act (12 U.S.C. 4636a(h)(2)(B)(ii)), a finding of not guilty or other disposition of the charge does not preclude the Director from instituting removal, suspension, or prohibition proceedings under section 1377(a) or (b) of the Safety and Soundness Act (12 U.S.C. 4636a(a), (b)).

(e) *Preservation of authority.* Action by the Director under section 1377(h) of the Safety and Soundness Act (12 U.S.C. 4636a(h)), shall not be deemed as a predicate or a bar to any other regulatory, supervisory, or enforcement action under the Safety and Soundness Act.

§ 1209.102 Hearing on removal or suspension.

(a) *Hearing requests.*—(1) *Deadline.* An entity-affiliated party served with a notice of suspension or prohibition or an order of removal or prohibition, within 30 days of service of such notice or order, may submit to the Director a written request to appear before the Director to show that his or her continued service or participation in the affairs of the regulated entity will not pose a threat to the interests of, or threaten to impair public confidence in, the Enterprises or the Banks. The request must be addressed to the Director and sent to the Federal Housing Finance Agency at 1700 G Street, NW., Washington, DC 20552, by:

(i) Overnight U.S. Postal Service delivery or delivery by a reliable commercial delivery service for same day or overnight delivery to the address stated above; or

(ii) First class, registered, or certified mail via the U.S. Postal Service.

(2) *Waiver of appearance.* An entity-affiliated party may elect in writing to waive his or her right to appear to make a statement in person or through counsel and have the matter determined solely on the basis of his or her written submission.

(b) *Form and timing of hearing.*—(1) *Informal hearing.* Hearings under subpart F of this part are not subject to the formal adjudication provisions of the Administrative Procedure Act (5 U.S.C. 554 through 557), and are not conducted under subpart C of this part.

(2) *Setting of the hearing.* Upon receipt of a timely request for a hearing, the Director will give written notice and set a date within 30 days for the entity-affiliated party to appear, personally, or through counsel, before the Director or his or her designee(s) to submit written materials (or, at the discretion of the Director, oral testimony and oral argument) to make the necessary showing under paragraph (a) of this section. The entity-affiliated party may submit a written request for additional time for the hearing to commence, without undue delay, and the Director may extend the hearing date for a specified time.

(3) *Oral testimony.* The Director or his or her designee, in his or her discretion, may deny, permit, or limit oral testimony in the hearing.

(c) *Conduct of the hearing.*—(1) *Hearing officer.* A hearing under this section may be presided over by the Director or one or more designated FHFA employees, except that an officer designated by the Director (hearing officer) to conduct the hearing may not have been involved in an underlying criminal proceeding, a factually related proceeding, or an enforcement proceeding in a prosecutorial or investigative role. This provision does not preclude the Director otherwise from seeking information on the matters at issue from appropriate FHFA staff on an as needed basis consistent with § 1209.101(d)(2).

(2) *Submissions.* All submissions of the requestor and FHFA's counsel of record must be received by the Director or his or her designee no later than 10 days prior to the date set for the hearing. FHFA may respond in writing to the requestor's submission and serve the requestor (and any other interested party such as the regulated entity) not later than the date fixed by the hearing officer for submissions or other time period as the hearing officer may require.

(3) *Procedures.*—(i) *Fact finding authority of the hearing officer.* The hearing officer shall determine all procedural matters under subpart F of this part, permit or limit the appearance of witnesses in accordance with paragraph (b)(3) of this section, and impose time limits as he or she deems reasonable. All oral statements, witness testimony, if permitted, and documents submitted that are found by the hearing officer to be materially relevant to the proceeding and not unduly repetitious may be considered. The hearing officer may question any person appearing in the proceeding, and may make any ruling reasonably necessary to ensure the full and fair presentation of evidence and to facilitate the efficient and effective operation of the proceeding.

(ii) *Statements to an officer.* Any oral or written statement made to the Director, a hearing officer, or any FHFA employee under subpart F of this part is deemed to be a statement made to a Federal officer or agency within the meaning of 18 U.S.C. 1006.

(iii) *Oral testimony.* If either the requestor or FHFA counsel of record desires to present oral testimony to supplement the party's written submission he or she must make a request in writing to the hearing officer not later than 10 days prior to the hearing, as provided in paragraph (c)(2) of this section, or within a shorter time period as permitted by the hearing officer for good cause shown. The request should include the name of the individual(s), a statement generally descriptive of the expected testimony, and the reasons why such oral testimony is warranted. The hearing officer generally will not admit witnesses, absent a strong showing of specific and compelling need. Witnesses, if admitted, shall be sworn.

(iv) *Written materials.* Each party must file a copy of any affidavit, memorandum, or other written material to be presented at the hearing with the hearing officer and serve copies on any other interested party (such as the affected regulated entity) not later than 10 days prior to commencement of the informal hearing, as provided in paragraph (c)(2), or within a shorter time period as permitted by the hearing officer for good cause shown.

(v) *Relief.* The purpose of the hearing is to determine whether the suspension or prohibition from participation in any manner in the conduct of the affairs of the regulated entity will be continued, terminated, or otherwise modified, or whether the order removing such party from office or prohibiting the party from further participation in any manner in the conduct of the affairs of the regulated entity will be rescinded or otherwise modified.

(vi) *Ultimate question.* In deciding on any request for relief from a notice of suspension or prohibition, the hearing officer shall not consider the ultimate question of guilt or innocence with respect to the outstanding criminal charge(s). In deciding on a request for relief from a removal order, the hearing officer shall not consider challenges to or efforts to impeach the validity of the conviction. In either case, the hearing officer may consider facts that show the nature of the events on which the conviction or charges were based.

(4) *Record.* If warranted under the circumstances of the matter, the hearing officer may require that a transcript of the proceedings be prepared at the expense of the requesting party. The hearing officer may order the record be kept open for a reasonable time following the hearing, not to exceed five business days, to permit the filing of additional pertinent submissions for the record. Thereafter, no further submissions are to be admitted to the record, absent good cause shown.

§ 1209.103 Recommended and final decisions.

(a) *Recommended decision.*—(1) *Written recommended decision of the hearing officer.* Not later than 20 days following the close of the hearing (or if the requestor waived a hearing, from the deadline for submission of the written materials), the hearing officer will serve a copy of the recommended decision on the parties to the proceeding. The recommended decision must include a summary of the findings, the parties' respective arguments, and support for the determination.

(2) *Five-day comment period.* Not later than five business days after receipt of the recommended decision, the parties shall submit written comments in response to the recommended decision, if any, to the hearing officer. The hearing officer shall not grant any extension of the stated time for responses to a recommended decision.

(3) *Recommended decision to be transmitted to the Director.* The hearing officer shall promptly forward the recommended decision, and written comments, if any, and the record to the Director for final determination.

(b) *Decision of the Director.* Within 60 days of the date of the hearing, or if the requestor waived a hearing the date fixed for the hearing, the Director will notify the entity-affiliated party in writing by registered mail of the disposition of his or her request for relief from the notice of suspension or prohibition or the order of removal or prohibition. The decision will state whether the suspension or prohibition will be continued, terminated, or otherwise modified, or whether the order removing such party from any participation in the affairs of the regulated entity will be rescinded or otherwise modified. The decision will contain a brief statement of the basis for an adverse determination. The Director's decision is a final and non-appealable order.

(c) *Effect of notice or order.* A removal or prohibition by order shall remain in effect until terminated by the Director. A suspension or prohibition by notice remains in effect until the criminal charge is disposed of or until terminated by the Director.

(d) *Reconsideration.* A suspended or removed entity-affiliated party subsequently may petition the Director to reconsider the final decision any time after the expiration of a 12-month period from the date of the decision, but no such request may be made within 12 months of a previous petition for reconsideration. An entity-affiliated party must submit a petition for reconsideration in writing; the petition shall state the specific grounds for relief from the notice of suspension or order or removal and be supported by a

memorandum and any other documentation materially relevant to the request for reconsideration. No hearing will be held on a petition for reconsideration, and the Director will inform the requestor of the disposition of the reconsideration request in a timely manner. A decision on a request for reconsideration shall not constitute an appealable order.

CHAPTER XVII—OFFICE OF FEDERAL HOUSING ENTERPRISE OVERSIGHT, DEPARTMENT OF HOUSING AND URBAN DEVELOPMENT

Subchapter D—Rules of Practice and Procedure

PART 1780—[REMOVED]

■ 3. Remove part 1780.

Dated: August 16, 2011.

Edward J. DeMarco,

Acting Director, Federal Housing Finance Agency.

[FR Doc. 2011–21378 Filed 8–25–11; 8:45 am]

BILLING CODE 8070–01–P

Reader Aids

Federal Register

Vol. 76, No. 166

Friday, August 26, 2011

CUSTOMER SERVICE AND INFORMATION

Federal Register/Code of Federal Regulations	
General Information, indexes and other finding aids	**202–741–6000**
Laws	**741–6000**
Presidential Documents	
Executive orders and proclamations	**741–6000**
The United States Government Manual	**741–6000**
Other Services	
Electronic and on-line services (voice)	**741–6020**
Privacy Act Compilation	**741–6064**
Public Laws Update Service (numbers, dates, etc.)	**741–6043**
TTY for the deaf-and-hard-of-hearing	**741–6086**

ELECTRONIC RESEARCH

World Wide Web

Full text of the daily Federal Register, CFR and other publications is located at: **www.fdsys.gov.**

Federal Register information and research tools, including Public Inspection List, indexes, and links to GPO Access are located at: **www.ofr.gov.**

E-mail

FEDREGTOC-L (Federal Register Table of Contents LISTSERV) is an open e-mail service that provides subscribers with a digital form of the Federal Register Table of Contents. The digital form of the Federal Register Table of Contents includes HTML and PDF links to the full text of each document.

To join or leave, go to **http://listserv.access.gpo.gov** and select *Online mailing list archives, FEDREGTOC-L, Join or leave the list (or change settings);* then follow the instructions.

PENS (Public Law Electronic Notification Service) is an e-mail service that notifies subscribers of recently enacted laws.

To subscribe, go to **http://listserv.gsa.gov/archives/publaws-l.html** and select *Join or leave the list (or change settings);* then follow the instructions.

FEDREGTOC-L and **PENS** are mailing lists only. We cannot respond to specific inquiries.

Reference questions. Send questions and comments about the Federal Register system to: **fedreg.infonara.gov**

The Federal Register staff cannot interpret specific documents or regulations.

Reminders. Effective January 1, 2009, the Reminders, including Rules Going Into Effect and Comments Due Next Week, no longer appear in the Reader Aids section of the Federal Register. This information can be found online at **http://www.regulations.gov.**

CFR Checklist. Effective January 1, 2009, the CFR Checklist no longer appears in the Federal Register. This information can be found online at **http://bookstore.gpo.gov/.**

FEDERAL REGISTER PAGES AND DATE, AUGUST

45653–46184 1
46185–46594 2
46595–47054 3
47055–47422 4
47423–47984 5
47985–48712 8
48713–49278 9
49279–49648 10
49649–50110 11
50111–50402 12
50403–50660 15
50661–50880 16
50881–51244 17
51245–51868 18
51869–52208 19
52209–52532 22
52533–52850 23
52851–53044 24
53045–53300 25
53301–53630 26

CFR PARTS AFFECTED DURING AUGUST

At the end of each month the Office of the Federal Register publishes separately a List of CFR Sections Affected (LSA), which lists parts and sections affected by documents published since the revision date of each title.

3 CFR

Proclamations:
8696 46183
8697 49277
8698 49647

Executive Orders:
13582 52209
13583 52847

Administrative Orders:
Notices:
Notice of July 28, 2011 45653
Notice of August 12, 2011 50661
Presidential Determinations:
No. 2011–12 of August 8, 2011 53297
No. 2011–13 of August 10, 2011 53299

5 CFR

293 52533
532 ..... 52537, 53045
550 52537
843 52539

Proposed Rules:
213 47495
250 47516
302 47495
315 47495
330 47495
334 47495
362 47495
530 45710
531 ..... 45710, 47495
536 ..... 45710, 47495
550 47495
575 47495
733 52287
890 47495

6 CFR

Proposed Rules:
31 46908

7 CFR

2 52851
205 46595
301 ..... 52541, 52543
319 52544
946 48713
1217 46185
1730 47055

Proposed Rules:
272 51907
273 ..... 51274, 51907
276 51274
277 52581
319 46209
402 50929
906 49381
920 48742
923 46651
984 50703

8 CFR

Proposed Rules:
100 52890

9 CFR

93 52547
161 52548
201 50881

Proposed Rules:
71 50082
77 50082
78 50082
90 50082

10 CFR

429 46202
430 ..... 46202, 52852, 52854
433 49279
435 49279

Proposed Rules:
26 46651
40 47085
429 ..... 48745, 49238
430 ..... 47518, 49238, 50145, 52892
431 ..... 47518, 48745, 50148, 51281

12 CFR

100 48950
108 48950
109 48950
112 48950
116 48950
128 48950
133 48950
136 48950
141 48950
143 48950
144 48950
145 48950
146 48950
150 48950
151 48950
152 48950
155 48950
157 48950
159 48950
160 48950
161 48950
162 48950
163 48950
164 48950
165 48950
167 48950
168 48950
169 48950
170 48950
171 48950

172....48950
174....48950
190....48950
191....48950
192....48950
193....48950
194....48950
195....48950
196....48950
197....48950
Ch. III....47652
908....53596
1204....51869
1209....53596
1780....53596
Proposed Rules:
240....46652
615....51289, 53344

14 CFR

33....47423
39....45655, 45657, 46597, 47056, 47424, 47427, 47430, 50111, 50113, 50115, 50403, 50405, 50881, 52213, 52217, 52220, 52222, 52225, 53046, 53301, 53303, 53305, 53308, 53312, 53315, 53317, 53324, 53326
65....47058
71....47060, 47061, 47435, 49285, 52229, 52230, 53048, 53049, 53328
91....52231
95....46202
97....47985, 47988, 52237, 52239
119....52231
121....52241
125....52231
133....52231
137....52231
141....52231
142....52231
145....52231
147....52231
Proposed Rules:
39....45713, 47520, 47522, 48045, 48047, 48049, 48749, 50152, 50706, 52288, 52593, 52899, 52901, 53346, 53348
71....49383, 49385, 49386, 49387, 49388, 49390, 50156, 52290, 52291, 52292, 52596, 52905, 53352, 53353, 53354, 53355, 53356, 53358, 53359, 53360, 53361

15 CFR

744....50407
Proposed Rules:
Ch. VII....47527
801....50158

16 CFR

3....52249
4....52249
Ch. II....46598, 49286
1450....47436
Proposed Rules:
239....52596
305....45715
424....51308
700....52596
701....52596
702....52596
703....52596
1130....48053

17 CFR

35....49291
40....45666
165....53172
200....46603
210....50117
229....46603, 50117
230....46603, 50117
232....46603, 47438
239....46603, 50117
240....46603, 46960, 50117, 52549
249....46603, 46960, 50117, 52549
270....50117
274....50117
Proposed Rules:
1....45724, 45730, 47526
23....45724, 45730, 47526
39....45730, 47526
71....46212
229....47948
230....47948, 49698
239....47948
240....46668
249....47948

18 CFR

35....49842
260....52253
292....50663
Proposed Rules:
357....46668

19 CFR

159....50883, 52862
Proposed Rules:
10....51914
101....52890
163....51914

20 CFR

655....45667

21 CFR

520....48714, 49649, 53050
522....48714, 53050
524....48714
866....48715
870....50663
884....50663
886....51876
Proposed Rules:
73....49707
101....46671, 49707
573....48751
870....47085, 48058
882....48062

22 CFR

126....47990
Proposed Rules:
228....51916

23 CFR

Proposed Rules:
655....46213

24 CFR

Proposed Rules:
202....53362

25 CFR

Proposed Rules:
Ch. III....47089, 50436

26 CFR

1....45673, 49300, 49570, 50887, 51878, 51879, 52556
17....51879
20....49570
25....49570
51....51245
54....46621
301....52259, 52561
602....51245, 52556
Proposed Rules:
1....50931, 51922
31....50949
40....46677
49....46677
51....51310
54....46677, 52442, 52475
602....52442

27 CFR

24....52862
25....52862
26....52862
40....52862
41....52862
70....52862
Proposed Rules:
40....52913
41....52913
44....52913
45....52913
46....52913

29 CFR

2590....46621
4022....50413
Proposed Rules:
2590....52442, 52475

30 CFR

Proposed Rules:
917....50436
943....50708
1206....52294

31 CFR

10....49650
1010....45689

32 CFR

159....49650
319....49658, 49659
323....49661

33 CFR

100....52236, 52563, 52865, 53329, 53337
117....45690, 47440, 48717, 49300, 49662, 49663, 49664, 50123, 50124, 51885, 52565, 52566, 52567, 53341, 53342
165....45693, 46626, 47441, 47993, 47996, 48718, 49301, 49664, 49666, 50124, 50667, 50669, 50680, 51255, 51887, 52266, 52268, 52269, 52569, 53051, 53054, 53337
Proposed Rules:
110....52599
117....50161, 50950, 52602
165....45738, 48070, 48751, 50710
167....47529
Subch. S....53364

34 CFR

668....52271

37 CFR

370....45695
382....45695

38 CFR

1....51890
2....51890
3....52572
17....52272
20....52572
21....45697, 49669
51....52274
63....52575

39 CFR

20....50414, 53056
111....48722, 51257
775....53037
912....52580
Proposed Rules:
111....50438
3020....51311
3050....52915

40 CFR

1....49669
2....49669
9....47996
21....49669
35....49669
49....49669
51....48208
52....45705, 47062, 47068, 47074, 47076, 47443, 48002, 48006, 48208, 49303, 49313, 49669, 50128, 50891, 51264, 51901, 51903, 52275, 52278, 52283, 52388, 52867
59....49669
60....49669
61....49669
62....49669
63....49669
65....49669
72....48208, 50129
75....50129
78....48208
82....47451, 49669
97....48208
98....53037
147....49669
180....49318, 50893, 50898, 50904, 52871, 52875
282....49669
300....49324, 50133, 50414, 51266
374....49669
704....50816
707....49669
710....50816
711....50816
721....47996
745....47918
763....49669
Proposed Rules:
50....46084, 48073
52....45741, 47090, 47092, 47094, 48754, 49391, 49708, 49711, 51314, 51922, 51925,

51927, 52604, 52623, 52917, 53369
60.....52738, 53371
63.....52738, 53371
72.....50164
75.....50164
85.....48758
86.....48758
98.....47392
174.....49396
180.....49396, 53372
260.....48073, 53376
261.....48073, 53376
270.....53376
300 .....49397, 50164, 50441, 51316
370.....48093
600.....48758
721.....46678

41 CFR

Proposed Rules:
60.....49398
Ch. 301 46216

42 CFR

50.....53256
412.....47836, 51476
413.....48486, 51476
418.....47302
476.....51476

Proposed Rules:
5.....50442, 53377
430.....46684
431.....51148
433.....46684, 51148
435.....51148
447.....46684
457.....46684, 51148

43 CFR

Proposed Rules:
2.....52295

44 CFR

64.....49329
65 .....49674, 50420, 50423, 50913, 50915, 52879
67 .....49676, 50918, 50920

Proposed Rules:
67 .....46701, 46705, 46715, 46716, 50443, 50446, 50952, 50960, 53082

45 CFR

94.....53256
147.....46621

Proposed Rules:
147.....52442, 52475
155.....51202
157.....51202
170.....48769

46 CFR

Proposed Rules:
1 .....45908, 46217, 48101
2.....47531, 49976
10 .....45908, 46217, 48101
11 .....45908, 46217, 48101
12 .....45908, 46217, 48101
13 .....45908, 46217, 48101
14 .....45908, 46217, 48101
15 .....45908, 46217, 49976
28.....51317
136.....49976
137.....49976
138.....49976
139.....49976
140.....49976
141.....49976
142.....49976
143.....49976
144.....49976
401.....47095, 50713

47 CFR

1.....49333, 49364
2.....49364
25.....49364, 50425
64.....47469, 47476
73.....49364, 49697
90.....51271

Proposed Rules:
9.....47114
36.....49401
54.....49401, 50969
61.....49401
64.....49401, 52625
69.....49401
73.....52632

48 CFR

201.....52139
209.....52138
216.....52133
225.....52132, 52133
245.....52139
252 .....52133, 52138, 52139
1401.....50141
1402.....50141
1415.....50141
1417.....50141
1419.....50141
1436.....50141
1452.....50141
1816.....46206
6101.....50926
6103.....50926
6104.....50926
6105.....50926
9903.....49365

Proposed Rules:
42.....48776, 50714
204.....52297
252.....52297
9904.....53377, 53378

49 CFR

228.....50360
383.....50433
390.....50433
563.....47478
567.....53072
571.....48009, 52880
591.....53072
592.....53072
593.....53072
595.....47078
1002.....46628
1515.....51848, 53080
1520.....51848, 53080
1522.....51848, 53080
1540.....51848, 53080
1544.....51848, 53080
1546.....51848, 53080
1548.....51848, 53080
1549.....51848, 53080

Proposed Rules:
171.....50332, 51324
172.....50332, 51324
173.....50332, 51324
174.....50332, 51324
175.....50332
176.....50332
177.....50332
178.....50332
179.....51272
180.....51272
192.....53086
236.....52918
531.....48758
533.....48758
571.....53102
580.....48101

50 CFR

17 .....46632, 47490, 48722, 49542, 50052, 50680, 53224
18.....47010
80.....46150
622.....50143, 51905
635 .....49368, 52886, 53343
648 .....47491, 47492, 51272, 52286
665.....52888
679 .....45709, 46207, 46208, 47083, 47493

Proposed Rules:
17 .....46218, 46234, 46238, 46251, 46362, 47123, 47133, 48777, 49202, 49408, 49412, 50542, 50971, 51929, 52297, 53379, 53381
20.....48694, 53536
223.....50447, 50448
224 .....49412, 50447, 50448
622.....46718, 50979
648.....45742, 47533
660.....50449
665.....46719
679 .....49417, 52148, 52301
680.....49423

LIST OF PUBLIC LAWS

This is a continuing list of public bills from the current session of Congress which have become Federal laws. It may be used in conjunction with "P L U S" (Public Laws Update Service) on 202–741–6043. This list is also available online at *http://www.archives.gov/federal-register/laws*.

The text of laws is not published in the **Federal Register** but may be ordered in "slip law" (individual pamphlet) form from the Superintendent of Documents, U.S. Government Printing Office, Washington, DC 20402 (phone, 202–512–1808). The text will also be made available on the Internet from GPO's Federal Digital System (FDsys) at *http://www.gpo.gov/fdsys*. Some laws may not yet be available.

H.R. 2553/P.L. 112–27
Airport and Airway Extension Act of 2011, Part IV (Aug. 5, 2011; 125 Stat. 270)

H.R. 2715/P.L. 112–28
To provide the Consumer Product Safety Commission with greater authority and discretion in enforcing the consumer product safety laws, and for other purposes. (Aug. 12, 2011; 125 Stat. 273)

Last List August 5, 2011

Public Laws Electronic Notification Service (PENS)

PENS is a free electronic mail notification service of newly enacted public laws. To subscribe, go to *http://listserv.gsa.gov/archives/publaws-l.html*

Note: This service is strictly for E-mail notification of new laws. The text of laws is not available through this service. **PENS** cannot respond to specific inquiries sent to this address.