AUTHENTICATED
U.S. GOVERNMENT
INFORMATION
GPO

FEDERAL REGISTER

Vol. 76 Wednesday,
No. 169 August 31, 2011

Pages 54071–54372

OFFICE OF THE FEDERAL REGISTER

The **FEDERAL REGISTER** (ISSN 0097–6326) is published daily, Monday through Friday, except official holidays, by the Office of the Federal Register, National Archives and Records Administration, Washington, DC 20408, under the Federal Register Act (44 U.S.C. Ch. 15) and the regulations of the Administrative Committee of the Federal Register (1 CFR Ch. I). The Superintendent of Documents, U.S. Government Printing Office, Washington, DC 20402 is the exclusive distributor of the official edition. Periodicals postage is paid at Washington, DC.

The **FEDERAL REGISTER** provides a uniform system for making available to the public regulations and legal notices issued by Federal agencies. These include Presidential proclamations and Executive Orders, Federal agency documents having general applicability and legal effect, documents required to be published by act of Congress, and other Federal agency documents of public interest.

Documents are on file for public inspection in the Office of the Federal Register the day before they are published, unless the issuing agency requests earlier filing. For a list of documents currently on file for public inspection, see *www.ofr.gov.*

The seal of the National Archives and Records Administration authenticates the Federal Register as the official serial publication established under the Federal Register Act. Under 44 U.S.C. 1507, the contents of the **Federal Register** shall be judicially noticed.

The **Federal Register** is published in paper and on 24x microfiche. It is also available online at no charge at *www.fdsys.gov*, a service of the U.S. Government Printing Office.

The online edition of the **Federal Register** is issued under the authority of the Administrative Committee of the Federal Register as the official legal equivalent of the paper and microfiche editions (44 U.S.C. 4101 and 1 CFR 5.10). It is updated by 6:00 a.m. each day the **Federal Register** is published and includes both text and graphics from Volume 59, 1 (January 2, 1994) forward. For more information, contact the GPO Customer Contact Center, U.S. Government Printing Office. Phone 202-512-1800 or 866-512-1800 (toll free). E-mail, *gpo@custhelp.com.*

The annual subscription price for the **Federal Register** paper edition is $749 plus postage, or $808, plus postage, for a combined **Federal Register, Federal Register** Index and List of CFR Sections Affected (LSA) subscription; the microfiche edition of the **Federal Register** including the **Federal Register** Index and LSA is $165, plus postage. Six month subscriptions are available for one-half the annual rate. The prevailing postal rates will be applied to orders according to the delivery method requested. The price of a single copy of the daily **Federal Register,** including postage, is based on the number of pages: $11 for an issue containing less than 200 pages; $22 for an issue containing 200 to 400 pages; and $33 for an issue containing more than 400 pages. Single issues of the microfiche edition may be purchased for $3 per copy, including postage. Remit check or money order, made payable to the Superintendent of Documents, or charge to your GPO Deposit Account, VISA, MasterCard, American Express, or Discover. Mail to: U.S. Government Printing Office—New Orders, P.O. Box 979050, St. Louis, MO 63197-9000; or call toll free 1-866-512-1800, DC area 202-512-1800; or go to the U.S. Government Online Bookstore site, see *bookstore.gpo.gov.*

There are no restrictions on the republication of material appearing in the **Federal Register.**

How To Cite This Publication: Use the volume number and the page number. Example: 76 FR 12345.

Postmaster: Send address changes to the Superintendent of Documents, Federal Register, U.S. Government Printing Office, Washington, DC 20402, along with the entire mailing label from the last issue received.

SUBSCRIPTIONS AND COPIES

PUBLIC

Subscriptions:

Paper or fiche	**202–512–1800**
Assistance with public subscriptions	**202–512–1806**

General online information **202–512–1530; 1–888–293–6498**

Single copies/back copies:

Paper or fiche	**202–512–1800**
Assistance with public single copies	**1–866–512–1800 (Toll-Free)**

FEDERAL AGENCIES

Subscriptions:

Paper or fiche	**202–741–6005**
Assistance with Federal agency subscriptions	**202–741–6005**

Printed on recycled paper.

Contents

Federal Register

Vol. 76, No. 169

Wednesday, August 31, 2011

Agricultural Marketing Service
RULES
Assessment Rate Decrease for Fresh Pears Grown in Oregon and Washington, 54075–54078
Cotton Board Rules and Regulations:
Adjusting Supplemental Assessment on Imports, 54078–54093

Agriculture Department
See Agricultural Marketing Service
See Animal and Plant Health Inspection Service
See Farm Service Agency
See Food Safety and Inspection Service
See Forest Service
NOTICES
Privacy Act; Systems of Records, 54190–54192

Alcohol, Tobacco, Firearms, and Explosives Bureau
NOTICES
Agency Information Collection Activities; Proposals, Submissions, and Approvals:
Federal Explosives License/Permit Renewal Application, 54255–54256
Federal Firearms License Renewal Application, 54255

Animal and Plant Health Inspection Service
NOTICES
Fiscal Year 2012 User Fees:
Veterinary Import/Export, Diagnostic Services, and Export Certification for Plants and Plant Products, 54193–54194

Census Bureau
NOTICES
Meetings:
Census Scientific Advisory Committee, 54197–54198

Civil Rights Commission
NOTICES
Meetings; Sunshine Act, 54196

Commerce Department
See Census Bureau
See Industry and Security Bureau
See International Trade Administration
See National Oceanic and Atmospheric Administration
NOTICES
Membership of the Departmental Performance Review Board, 54196–54197
Membership of the Office of the Secretary Performance Review Board, 54197

Consumer Product Safety Commission
NOTICES
Third Party Testing for Certain Childrens Products; Toys:
Requirements for Accreditation of Third Party Conformity Assessment Bodies, 54218–54222

Defense Department
See Navy Department

Energy Department
NOTICES
Environmental Assessments; Availability, etc.:
Knolls Atomic Power Laboratory, Kesselring Site, 54223–54224
Meetings:
Energy Efficiency and Renewable Energy Advisory Committee, 54224–54225

Environmental Protection Agency
RULES
Pesticide Tolerances:
Tebuconazole, 54127–54133
Review of National Ambient Air Quality Standards for Carbon Monoxide, 54294–54343
PROPOSED RULES
Data Call-in Order for Pesticide Tolerance:
Fenamiphos, 54185–54188
NOTICES
Draft Toxicological Reviews:
1,4–Dioxane; Public Comment Period and Listening Session, 54225–54227
Acrylonitrile; Extension of Comment Period, 54228–54229
n–Butanol, 54227–54228
Pesticide Experimental Use Permits; Applications, 54229–54230
Product Cancellation Order for Certain Pesticide Registrations, 54230–54233

Farm Service Agency
RULES
Emergency Assistance for Livestock, Honeybees, and Farm–Raised Fish Program, etc.:
Technical Amendment, 54072–54075

Federal Aviation Administration
RULES
Airworthiness Directives:
Bombardier, Inc. Model DHC–8–400 Series Airplanes, 54093–54095
Pilot in Command Proficiency Check and Other Changes to the Pilot and Pilot School Certification Rules, 54095–54110
PROPOSED RULES
Airworthiness Directives:
328 Support Services GmbH (Type Certificate Previously Held by AvCraft Aerospace GmbH, etc.) Model 328 100 Airplanes, 54145–54148
BAE SYSTEMS (Operations) Limited Model 4101 Airplanes, 54139–54141
Cessna Aircraft Co. Model 680 Airplanes, 54141–54143
Turbomeca Arriel 1B Turboshaft Engines, 54143–54145
Amendments of Class E Airspace:
Emmonak, AK, 54148–54149
Galbraith Lake, AK, 54152–54153
Kipnuk, AK, 54149–54150
Kwigillingok, AK, 54151–54152
Proposed Amendment of Class D and Class E Airspace:
Baltimore, MD, 54153–54155
Proposed Establishment of Class E Airspace:
Danville, PA, 54155–54156

NOTICES
Agency Information Collection Activities; Proposals, Submissions, and Approvals:
Application for Certificate of Waiver or Authorization, 54286–54287
Commercial Space Transportation Reusable Launch Vehicle and Reentry Licensing, 54285–54286
General Aviation Awards Program, 54283–54284
License Requirements for Operation of Launch Site, 54286
Reduced Vertical Separation Minimum, 54284
Rotorcraft External Load Operator Certificate Application, 54285
Intents to Release Federally-Obligated Airport Properties:
Tampa International Airport, Tampa, FL, 54287
Petitions for Exemptions; Summaries of Petitions Received, 54287–54288

Federal Communications Commission
PROPOSED RULES
Television Broadcasting Services:
Hampton–Norfolk, VA; Norfolk, VA–Elizabeth City, NC, 54189
Montgomery, AL, 54188–54189
NOTICES
Agency Information Collection Activities; Proposals, Submissions, and Approvals, 54233–54234
Meetings:
Communications Security, Reliability, and Interoperability Council, 54234–54235

Federal Election Commission
NOTICES
Meetings; Sunshine Act, 54235

Federal Emergency Management Agency
RULES
Flood Elevation Determinations, 54134–54137
NOTICES
Agency Information Collection Activities; Proposals, Submissions, and Approvals:
Integrated Public Alert and Warning Systems (IPAWS) Inventory, 54245–54246

Federal Highway Administration
PROPOSED RULES
National Standards for Traffic Control Devices:
Manual on Uniform Traffic Control Devices for Streets and Highways; Revision, 54156–54162
NOTICES
Limitations on Claims for Judicial Reviews of Actions:
Proposed Bridge and Approach Roadways in Nevada and Arizona; Final Federal Agency Actions, 54288

Federal Maritime Commission
NOTICES
Agreements Filed, 54235

Federal Motor Carrier Safety Administration
NOTICES
Procedural Changes to the Performance and Registration Information Systems Management Program, 54288–54289

Federal Railroad Administration
NOTICES
Petitions for Waivers of Compliance, 54289–54290

Fish and Wildlife Service
RULES
Endangered and Threatened Wildlife and Plants:
Revised Designation of Critical Habitat for the Sonoma County Distinct Population Segment of California Tiger Salamander, 54346–54372
NOTICES
Environmental Assessments; Availability, etc.:
Supawna Meadows National Wildlife Refuge, Salem County, NJ, 54247–54248

Food Safety and Inspection Service
NOTICES
Final Compliance Guides; Availability:
Use of Video or Other Electronic Monitoring or Recording Equipment in Federally Inspected Establishments, 54194–54195

Forest Service
NOTICES
2010 Resources Planning Act Assessment Draft, 54195
Meetings:
Cherokee National Forest Secure Rural Schools Resource Advisory Committee, 54196
Eastern Washington Cascades Provincial and Yakima Provincial Advisory Committees, 54196

Health and Human Services Department
See Health Resources and Services Administration
See National Institutes of Health
NOTICES
Supplement to the FY2010 Single-Source Cooperative Agreement with the World Health Organization, 54235–54236

Health Resources and Services Administration
NOTICES
Statements of Organization, Functions and Delegations of Authority, 54236–54237

Homeland Security Department
See Federal Emergency Management Agency
NOTICES
Agency Information Collection Activities; Proposals, Submissions, and Approvals:
Award of Public Contracts, 54243–54244
Post-Award Contract Information, 54242–54243
Telecommunications Service Priority System, 54244–54245

Housing and Urban Development Department
NOTICES
Agency Information Collection Activities; Proposals, Submissions, and Approvals:
FY12 Transformation Initiative; Sustainable Communities Research Grant Program, 54246–54247

Indian Affairs Bureau
PROPOSED RULES
No Child Left Behind School Facilities and Construction Negotiated Rulemaking Committee; Meeting, 54162–54163
NOTICES
Agency Information Collection Activities; Proposals, Submissions, and Approvals:
Indian Child Welfare Assistance Report, 54249–54250
Verification of Indian Preference for Employment with BIA and IHS, 54248–54249

Industry and Security Bureau
NOTICES
Denials of Export Privileges:
Mahan Airways; Zarand Aviation; Gatewick LLC, et al., 54198–54202

Interior Department
See Fish and Wildlife Service
See Indian Affairs Bureau
See National Park Service
See Reclamation Bureau

International Trade Administration
NOTICES
Antidumping Duty New Shipper Reviews; Preliminary Results:
Honey from Argentina, 54202–54206
Antidumping Duty Orders; Final Results of Expedited Third Sunset Reviews:
Gray Portland Cement and Clinker from Japan, 54206–54207
Antidumping Duty Orders; Revocations:
Stainless Steel Plate in Coils from Italy, 54207–54208
Initiation of Antidumping Duty New Shipper Reviews:
Wooden Bedroom Furniture from the People's Republic of China, 54208–54209
Preliminary Results of Countervailing Duty Administrative Reviews:
Corrosion-Resistant Carbon Steel Flat Products from the Republic of Korea, 54209–54216

International Trade Commission
NOTICES
Complaints, 54251–54252
Investigations:
Certain Light-Emitting Diodes and Poducts Containing Same, 54254–54255
Certain Products Containing Interactive Program Guide or Parental Controls Technology, 54253–54254
Certain Wireless Devices with 3G Capabilities and Components Thereof, 54252–54253

Justice Department
See Alcohol, Tobacco, Firearms, and Explosives Bureau
RULES
Attorney General's Guidelines on Implementation of the Provisions of the Voting Rights Act Regarding Language Minority Groups, 54110–54112
James Zadroga 9/11 Health and Compensation Act of 2010, 54112–54126

Labor Department
See Mine Safety and Health Administration
NOTICES
Agency Information Collection Activities; Proposals, Submissions, and Approvals:
Claim Adjudication Process for Alleged Presence of Pneumoconiosis, 54256–54257
Consent to Receive Employee Benefit Plan Disclosures Electronically, 54258
Hazard Communication, 54257–54258

Legal Services Corporation
NOTICES
Fiscal Oversight Task Force Report and Recommendations, 54258–54259

Mine Safety and Health Administration
PROPOSED RULES
Proximity Detection Systems for Continuous Mining Machines in Underground Coal Mines, 54163–54179

National Highway Traffic Safety Administration
NOTICES
Decision that Certain Nonconforming Motor Vehicles are Eligible for Importation, 54290–54291

National Institutes of Health
NOTICES
Meetings:
Center for Scientific Review, 54238–54242
National Center for Research Resources, 54237–54240
National Center for Research Resources; Amendment, 54238
National Institute of Allergy and Infectious Diseases, 54240
National Institute of Diabetes and Digestive and Kidney Diseases, 54237
National Institute on Aging, 54238, 54241
Recombinant DNA Advisory Committee, 54241–54242

National Oceanic and Atmospheric Administration
RULES
Fisheries of Exclusive Economic Zone Off Alaska:
Reallocation of Pacific Cod in Bering Sea and Aleutian Islands Management Area, 54137–54138
NOTICES
Meetings:
Pacific Fishery Management Council, 54216–54217
Membership of National Oceanic and Atmospheric Administration Performance Review Board, 54217–54218

National Park Service
NOTICES
National Register of Historic Places; Pending Nominations and Related Actions, 54250–54251

Navy Department
NOTICES
Government-Owned Inventions; Available for Licensing, 54222–54223
Meetings:
U.S. Naval Academy Board of Visitors, 54223
Proposed Administrative Cost Recovery Settlements under CERCLA:
Marine Corps Logistics Base Barstow, CA, 54223

Nuclear Regulatory Commission
NOTICES
Environmental Assessments; Availability, etc.:
Dominion Nuclear Connecticut, Inc., Millstone Power Station, Units 1, 2, and 3, 54260–54261
Virginia Electric and Power Co.; North Anna Power Station, Units 1 and 2; Surry Power Station, Units 1 and 2, 54259–54260
Requests for Indirect License Transfers:
Carolina Power and Light; Proposed Merger Between Progress Energy, Inc. and Duke Energy Corp., 54261–54264

Personnel Management Office
RULES
Noncompetitive Appointment of Certain Military Spouses, 54071–54072

Postal Regulatory Commission
PROPOSED RULES
Appeals of Post Office Closings, 54179–54185
NOTICES
Post Office Closings, 54264–54267

Reclamation Bureau
NOTICES
Central Valley Project Improvement Act, Water Management Plans; Availability, 54251

Securities and Exchange Commission
NOTICES
Self-Regulatory Organizations; Proposed Rule Changes:
Chicago Mercantile Exchange, Inc., 54270–54271, 54275–54277
EDGA Exchange, Inc., 54267–54268
EDGX Exchange, Inc., 54281–54282
Fixed Income Clearing Corp., 54268–54270
NASDAQ OMX BX, Inc., 54277–54279
NASDAQ OMX PHLX LLC, 54271–54272, 54279–54281
NYSE Amex LLC, 54272–54274
NYSE Arca, Inc., 54274–54275

State Department
NOTICES
Agency Information Collection Activities; Proposals, Submissions, and Approvals:
Language Learning Survey Questions, 54283

Surface Transportation Board
NOTICES
Meetings:
Rail Energy Transportation Advisory Committee, 54291–54292

Transportation Department
See Federal Aviation Administration
See Federal Highway Administration
See Federal Motor Carrier Safety Administration
See Federal Railroad Administration
See National Highway Traffic Safety Administration
See Surface Transportation Board

Veterans Affairs Department
NOTICES
Meetings:
Advisory Committee on Disability Compensation; Amendment, 54292

Separate Parts In This Issue

Part II
Environmental Protection Agency, 54294–54343

Part III
Interior Department, Fish and Wildlife Service, 54346–54372

Reader Aids

Consult the Reader Aids section at the end of this page for phone numbers, online resources, finding aids, reminders, and notice of recently enacted public laws.

To subscribe to the Federal Register Table of Contents LISTSERV electronic mailing list, go to http://listserv.access.gpo.gov and select Online mailing list archives, FEDREGTOC-L, Join or leave the list (or change settings); then follow the instructions.

CFR PARTS AFFECTED IN THIS ISSUE

A cumulative list of the parts affected this month can be found in the Reader Aids section at the end of this issue.

5 CFR
315 54071

7 CFR
760 54072
927 54075
1205 54078

14 CFR
39 54093
61 54095
91 54095
141 54095
142 54095

Proposed Rules:
39 (4 documents) 54139, 54141, 54143, 54146
71 (6 documents) 54148, 54149, 54151, 54152, 54153

23 CFR

Proposed Rules:
655 54156

25 CFR

Proposed Rules:
Ch. I 54162

28 CFR
55 54110
104 54112

30 CFR

Proposed Rules:
75 54163

39 CFR

Proposed Rules:
3001 54179
3025 54179

40 CFR
50 54294
53 54294
58 54294
180 54127

Proposed Rules:
180 54185

44 CFR
67 54134

47 CFR

Proposed Rules:
73 (2 documents) 54188, 54189

50 CFR
17 54346
679 54137

Rules and Regulations

Federal Register
Vol. 76, No. 169
Wednesday, August 31, 2011

This section of the FEDERAL REGISTER contains regulatory documents having general applicability and legal effect, most of which are keyed to and codified in the Code of Federal Regulations, which is published under 50 titles pursuant to 44 U.S.C. 1510.

The Code of Federal Regulations is sold by the Superintendent of Documents. Prices of new books are listed in the first FEDERAL REGISTER issue of each week.

OFFICE OF PERSONNEL MANAGEMENT

5 CFR Part 315

RIN 3206–AM36

Noncompetitive Appointment of Certain Military Spouses

AGENCY: U.S. Office of Personnel Management.

ACTION: Final rule.

SUMMARY: The U.S. Office of Personnel Management is issuing final regulations to eliminate the 2-year eligibility limitation for noncompetitive appointment for spouses of certain deceased or 100 percent disabled veterans. OPM is removing this restriction to provide spouses of certain deceased or 100 percent disabled veterans with unlimited eligibility for noncompetitive appointment. The intended effect of this change is to further facilitate the entry of these military spouses into the Federal civil service.

DATES: This rule is effective September 30, 2011.

FOR FURTHER INFORMATION CONTACT: Michelle Glynn, 202–606–1571; Fax: 202–606–2329 by TDD: 202–418–3134, or e-mail: *michelle.glynn@opm.gov.*

SUPPLEMENTARY INFORMATION: On March 10, 2011, the Office of Personnel Management (OPM) published proposed regulations in the **Federal Register** at 76 FR 13100 to eliminate the 2-year eligibility limitation for noncompetitive appointment for spouses of certain deceased or 100 percent disabled veterans in part 315 of title 5, Code of Federal Regulations (CFR). OPM received 23 comments on the proposed rule: 19 from individuals, one from a Federal agency, and three from national military associations.

Six individuals, two national military associations, and one Federal agency expressed their general support for the proposed changes.

Four individuals and one national military association suggested that OPM also remove the 2-year window for appointment eligibility for military spouses whose eligibility is based on relocating with their service-member spouses as a result of permanent change of station (PCS) orders. OPM is not adopting this suggestion. The proposed regulation sought to remove the 2-year window for appointment eligibility only for spouses of service members who incurred a 100 percent disability because of the service members' active duty service, and spouses of service members killed while on active duty. OPM proposed to eliminate the 2-year window for spouses of certain deceased and 100 percent disabled service members based on the findings presented to us by the Department of the Navy's Spouse Employment and Empowerment Integrated Process Team. The Integrated Process Team (IPT) found that spouses of service members who were killed or who became 100 percent disabled while on active duty had been unable to make use of the noncompetitive hiring authority within the 2-year eligibility period due to their bereavement, convalescent care responsibilities, dependent care responsibilities, or their need to undergo education or training. The IPT did not indicate the 2-year window for appointment eligibility for PCS military spouses was problematic. Accordingly, OPM's proposal was limited to the problem the IPT did identify. Further, OPM believes 2 years is a reasonable period for spouses authorized to relocate on PCS orders to obtain Federal employment using this hiring authority. All other noncompetitive hiring authorities have a time limitation for appointment eligibility. Elimination of the 2-year window for PCS military spouses would create an inconsistency between this group and other individuals eligible for noncompetitive entry into Federal service. For these reasons, we find no basis for adopting this suggestion.

Five individuals suggested we change all references to ''killed while serving on active duty in the armed forces'' to ''died while serving on active duty in the armed forces'' to clarify that eligibility under this part is not limited to spouses of service members killed in action. OPM is not adopting this suggestion because we do not believe clarification is necessary. Our implementing guidance at *http://www.fedshirevets.gov/hire/hrp/qaspouse/index.aspx* clearly states that, for these purposes, a service member is considered to have been ''killed'' while on active duty if he or she dies for any reason while serving on active duty in the armed forces. Additionally, the language in the proposed regulation is consistent with the language used in Executive Order (E.O.) 13473 of September 30, 2008, which is the basis of the authority for these noncompetitive appointments.

One individual commented that the proposed rule excludes surviving spouses of service members who died of a service-connected cause, but not while on active duty. OPM has no authority to extend noncompetitive appointment eligibility to surviving spouses of service members who died of a service-connected cause, but not while on active duty. As noted above, E.O. 13473 is the source of the authority for noncompetitive appointment of certain military spouses, and that Order limits eligibility for noncompetitive appointment to military spouses who are relocating with their service-member spouses as a result of permanent change of station (PCS) orders, spouses of service members who incurred a 100 percent disability because of the service members' active duty service, and spouses of service members killed while on active duty.

Two individuals suggested OPM change the date a PCS spouse's eligibility begins from the date of the PCS orders to the date the military spouse actually reports to the new location. OPM is not adopting the suggestions to change the effective date of eligibility for PCS spouses. We believe the PCS document provides an appropriate, standardized basis on which to establish when an individual's eligibility for noncompetitive appointment begins. Further, we see no reliable way to verify when a military spouse actually relocates to the new geographic area, short of imposing a burdensome process on both the military spouse and the potential hiring agency.

Another individual suggested we clarify the effective date of a military spouse's eligibility, when based on

relocation due to PCS orders. This commenter believes agencies have been applying the 2-year eligibility period for PCS spouses inconsistently. As noted in the preceding paragraph, eligibility for PCS spouses begins on the date of the service member's PCS orders. We believe this is a clear standard that can and should be applied consistently.

One commenter stated these provisions do not apply to military spouses in the Department of Defense's (DoD) Priority Placement Program. Neither E.O. 13473 nor OPM's implementing regulation prevents an individual in any DoD military spouse program from utilizing these provisions, assuming that individual is otherwise eligible under 5 CFR 315.612.

Another commenter stated that service members should have the same hiring advantage as military spouses. Executive Order 13473 authorizes noncompetitive appointment only for certain military spouses. We do note that service members may be eligible under several veterans-specific hiring authorities, including Veterans Recruitment Act (VRA) appointments. In addition, service members may be entitled to veterans' preference, depending on when they served on active duty and the character of that service.

One individual asked that we clarify whether these provisions apply to military spouses who are current Federal employees, or individuals who have never been in Federal service. These provisions apply to any military spouse who is otherwise eligible under section 315.612.

Another commenter asked whether the proposed changes apply to all widows of 100 percent disabled veterans. Per E.O. 13473, the proposed changes apply to any spouse of a service member who incurred a 100 percent disability because of the service member's active duty service, provided the individual is otherwise eligible under section 315.612.

One individual commented that non-military spouses should have the same opportunity for obtaining a Federal job as do military spouses. As noted above, E.O. 13473 authorizes noncompetitive appointment only for certain military spouses. Individuals not eligible under this authority must seek consideration under any hiring authority for which they are eligible, or apply through the competitive examining process. Use of the military spouse hiring authority, as is the case with all other noncompetitive hiring authorities, is completely discretionary on the part of the hiring agency. This authority does not constitute, establish, or convey a hiring preference or a selection priority for eligible military spouses.

Two of the comments we received were beyond the scope of the proposed changes. One individual asked that OPM reinstitute the Defense Civilian Intelligence Personnel System (DCIPS) interchange agreement. The other commenter suggested an improvement in the USAJOBS Web site.

Executive Order 13563 and Executive Order 12855, Regulatory Review

This rule has been reviewed by the Office of Management and Budget in accordance with E.O. 13563 and E.O. 12866.

Regulatory Flexibility Act

I certify that this regulation will not have a significant economic impact on a substantial number of small entities because it affects only Federal agencies and employees.

List of Subjects in 5 CFR Part 315

Government employees.

U.S. Office of Personnel Management.

John Berry,

Director.

Accordingly, OPM is amending 5 CFR part 315 as follows:

PART 315—CAREER AND CAREER-CONDITIONAL EMPLOYMENT

■ 1. The authority citation for part 315 continues to read as follows:

Authority: 5 U.S.C. 1302, 3301, and 3302; E.O. 10577, 3 CFR, 1954–1958 Comp. p. 218, unless otherwise noted; and E.O. 13162. Secs. 315.601 and 315.609 also issued under 22 U.S.C. 3651 and 3652. Secs. 315.602 and 315.604 also issued under 5 U.S.C. 1104. Sec. 315.603 also issued under 5 U.S.C. 8151. Sec. 315.605 also issued under E.O. 12034, 3 CFR, 1978 Comp. p. 111. Sec. 315.606 also issued under E.O. 11219, 3 CFR, 1964–1965 Comp. p. 303. Sec. 315.607 also issued under 22 U.S.C. 2506. Sec. 315.608 also issued under E.O. 12721, 3 CFR, 1990 Comp. p. 293. Sec. 315.610 also issued under 5 U.S.C. 3304(c). Sec. 315.611 also issued under 5 U.S.C. 3304(f). Sec. 315.612 also under E.O. 13473. Sec. 315.708 also issued under E.O. 13318, 3 CFR, 2004 Comp. p. 265. Sec. 315.710 also issued under E.O. 12596, 3 CFR, 1978 Comp. p. 229. Subpart I also issued under 5 U.S.C. 3321, E.O. 12107, 3 CFR, 1978 Comp. p. 264.

Subpart F—Career or Career-Conditional Appointment Under Special Authorities

■ 2. In § 315.612, revise paragraph (d)(1) to read as follows:

§ 315.612 Noncompetitive appointment of certain military spouses.

* * * * *

(d) *Conditions.* (1) In accordance with the provisions of this section, spouses are eligible for noncompetitive appointment:

(i) For a maximum of 2 years from the date of the service member's permanent change of station orders;

(ii) From the date of documentation verifying the member of the armed forces is 100 percent disabled; or

(iii) From the date of documentation verifying the member of the armed forces was killed while on active duty.

* * * * *

[FR Doc. 2011–22268 Filed 8–30–11; 8:45 am]

BILLING CODE 6325–39–P

DEPARTMENT OF AGRICULTURE

Farm Service Agency

7 CFR Part 760

RIN 0560–AH95

Emergency Assistance for Livestock, Honeybees, and Farm-Raised Fish Program, Livestock Indemnity Program, and General Provisions for Supplemental Agricultural Disaster Assistance Programs

AGENCY: Farm Service Agency, USDA.

ACTION: Final rule, technical amendment.

SUMMARY: The Farm Service Agency (FSA) is making several clarifying amendments and corrections to the regulations for the Emergency Assistance for Livestock, Honeybees, and Farm-Raised Fish Program (ELAP) and the Livestock Indemnity Program (LIP) to clarify when livestock death losses must have occurred to be eligible losses for LIP and ELAP benefits. This rule also clarifies when adverse weather events or loss conditions must have occurred to be eligible losses of livestock, honeybee, crops, and farm-raised fish for ELAP and Supplemental Revenue Assistance Payments Program (SURE) benefits. This rule clarifies an equitable relief provision for the risk management purchase requirement that applies to the Supplemental Agricultural Disaster Assistance Programs, authorized by the Food, Conservation, and Energy Act of 2008 (the 2008 Farm Bill), except LIP.

DATES: Effective Date: August 31, 2011.

FOR FURTHER INFORMATION CONTACT: Candace Thompson; phone (202) 720–7641; e-mail: *Candy.Thompson@wdc.usda.gov.*

Persons with disabilities or who require alternative means for communication (Braille, large print, audio tape, *etc.*) should contact the USDA Target Center at (202) 720–2600 (voice and TDD).

SUPPLEMENTARY INFORMATION: This rule makes minor clarifying amendments and corrections to the regulations that were published to implement disaster assistance programs authorized by the 2008 Farm Bill (Pub. L. 110–246). This rule amends the regulations to specify dates for eligible losses for SURE, ELAP and LIP, and to amend an equitable relief provision for the risk management purchase requirement for the Supplemental Agricultural Disaster Assistance Programs, except LIP. The Supplemental Agricultural Disaster Assistance Programs authorized by the 2008 Farm Bill include ELAP, LIP, the Livestock Forage Disaster Program (LFP), SURE, and the Tree Assistance Program (TAP).

A final rule for ELAP was published in the **Federal Register** on September 11, 2009 (74 FR 46665–46683) and amendments were published in the **Federal Register** on April 14, 2010 (75 FR 19185–19193). The final rule that included both the specific provisions for LIP and the general provisions that apply to all the Supplemental Agricultural Disaster Assistance Programs was published in the **Federal Register** on July 2, 2009 (74 FR 31567–31578). The final rule for SURE was published in the **Federal Register** on December 28, 2009 (74 FR 68480–68498) and amendments were published in the **Federal Register** on April 14, 2010 (75 FR 19185–19193).

The amendments in this rule are needed to clarify the dates for eligible losses, to clarify that it is the producer's responsibility to provide documentation to justify equitable relief for the risk management purchase requirement, and to correct typographical errors.

Amendments to General Provisions for Equitable Relief

7 CFR part 760 ''Indemnity Payment Programs,'' Subpart B, ''General Provisions for Supplemental Agricultural Disaster Assistance Programs'' specifies the general provisions that apply to all the Supplemental Agricultural Disaster Assistance Programs authorized by the 2008 Farm Bill. This rule clarifies a provision in Subpart B that specifies the requirements for equitable relief of the risk management purchase requirement.

As specified in the 2008 Farm Bill and in Subpart B, all of the Supplemental Agricultural Disaster Assistance Programs except LIP have a risk management purchase requirement. This means that producers must have purchased insurance or Noninsured Crop Disaster Assistance Program (NAP) coverage, as applicable, to be eligible for disaster assistance benefits. The current regulations specify that except for grazing land, producers must have obtained insurance or NAP coverage for all of their crops to be eligible for ELAP, SURE, and TAP, and for LFP, producers must have obtained insurance or NAP coverage for those grazing lands for which they seek benefits to be eligible. Producers who fail to meet the risk management purchase requirement are not eligible for benefits unless an exception applies. Exceptions include the Secretary's authority to grant equitable relief on a case-by-case basis to producers who fail to meet the risk management purchase requirement through no fault of their own and unintentionally.

The risk management purchase requirement is not changing with this rule, and neither are the exceptions to it. This rule amends § 760.106 to clarify that if equitable relief is sought, it is a producer's responsibility to provide evidence, to the satisfaction of FSA, that the failure to meet the requirement was unintentional. It is not FSA's responsibility to provide documentation that a failure to meet the risk management purchase requirement was or was not intentional. It is the producer who has failed to meet the risk management purchase requirement and who is seeking relief for that failure who must provide evidence as to intent, to the satisfaction of FSA. This clarifying amendment will impact all producers who seek equitable relief for the reason of unintentional failure to meet the risk management purchase requirement, by requiring them to provide evidence of intent.

This rule also makes a correction to section § 760.107 to correct an internal paragraph reference.

Amendments to Eligible Loss Dates for ELAP and LIP

This rule makes a technical correction to 7 CFR 760, subpart C, ''Emergency Assistance for Livestock, Honeybees, and Farm-Raised Fish Program,'' to clarify dates for eligible ELAP livestock, honeybee, and farm-raised fish losses. This correction is being made to be consistent with the program eligibility dates specified in the 2008 Farm Bill. A parallel change is being made to Subpart E, ''Livestock Indemnity Program,'' to clarify the dates on which livestock deaths must have occurred to qualify as an eligible loss and to Subpart G, ''Supplemental Revenue Assistance Payments Program,'' to clarify the time frame in which eligible losses must have occurred. Specifically, § 760.404(c) is being amended to correct the eligibility dates for eligible livestock deaths. The change extends the eligibility period from no later than 60 days from the ending date of the adverse weather event, but before October 1, 2011, to no later than 60 days from the ending date of the adverse weather event, but before November 30, 2011. For crop losses, § 760.601 and § 760.610 are being amended to clarify that the disaster event that causes crop losses must occur on or before September 30, 2011 for the crop losses to be eligible.

The intent of the amendment is to be consistent with the 2008 Farm Bill, and to provide benefits to producers who had eligible losses due to adverse weather events that occurred in 2008–2011. The 2008 Farm Bill specifies that the weather events that caused the losses, but not necessarily the losses, had to occur on or before September 30, 2011, for losses to be eligible. As specified in the current regulations, eligible livestock producers who suffered eligible livestock death losses in calendar years 2008 through 2010 were eligible to receive compensation for livestock that died no later than 60 calendar days from the ending date of the applicable adverse weather event. However, as specified in the current regulations, producers who suffer 2011 livestock death losses would not have the same opportunity to claim losses that occurred 60 calendar days after the eligible adverse weather event if the adverse weather event occurs in the last two months of fiscal year 2011 (the 60 calendar days before October 1, 2011), because the current regulation specifies that the eligible loss must have occurred before October 1, 2011. To provide fair and equitable treatment to all producers in a manner that is consistent with the 2008 Farm Bill, § 760.404(c) is being amended to provide that the eligible livestock must have died no later than 60 calendar days from the ending date of the applicable adverse weather event, but before November 30, 2011.

Similar changes are being made to the ELAP regulations in 7 CFR part 760, Subpart C, ''Emergency Assistance for Livestock, Honeybees, and Farm-Raised Fish Program,'' for the same reasons. The changes to the ELAP regulations also impact other losses, such as livestock feed and grazing losses, honeybee colony, hive, and feed losses, and farm-raised fish feed and fish death losses. Specifically, § 760.204(f)(1) is being amended to clarify the ending date by which eligible losses must have occurred is November 30, 2011.

These clarifications will provide eligibility to producers who had losses due to adverse events that occurred in the last two months of fiscal year 2011, for those cases where the actual losses occurred in October or November of

2011. For example, if a flood in September 2011 caused subsequent livestock deaths in mid-November of 2011, those losses would not be eligible under the current rule, but will be eligible with this correction.

Additional minor clarifying changes are being made to the regulations for LIP and ELAP to make it clear which date requirements apply to the adverse weather event or loss condition and which apply to the livestock deaths or other losses.

A clarification is being made to the SURE regulations in 7 CFR part 760, Subpart G, ''Supplemental Revenue Assistance Payments Program,'' for similar reasons. To be eligible for SURE payments, a producer must certify that at least one crop of economic significance suffered at least a 10 percent crop loss due to a disaster event occurring on or before September 30, 2011.

Notice and Comment

The Consolidated Security, Disaster Assistance, and Continuing Appropriations Act, 2009 made the exemption from notice and comments provisions contained in section 1601(c)(2) of the 2008 Farm Bill applicable in implementing section 12033 of the 2008 Farm Bill. Therefore, these regulations are exempt from the notice and comment requirements of the Administrative Procedure Act (5 U.S.C. 553), as specified in section 1601(c)(2) of the 2008 Farm Bill, which requires that the regulations be promulgated and administered without regard to the notice and comment provisions of 5 U.S.C. 553 or the Statement of Policy of the Secretary of Agriculture effective July 24, 1971, (36 FR 13804) relating to notices of proposed rulemaking and public participation in rulemaking.

Executive Order 12866

This technical amendment did not require Office of Management and Budget (OMB) designation under Executive Order 12866, ''Regulatory Planning and Review,'' and therefore OMB has not reviewed this rule.

Regulatory Flexibility Act

The Regulatory Flexibility Act (5 U.S.C. 601–612), as amended by the Small Business Regulatory Enforcement Fairness Act of 1996 (SBREFA), generally requires an agency to prepare a regulatory flexibility analysis of any rule subject to the notice and comment rulemaking requirements under the Administrative Procedure Act (5 U.S.C. 553). This rule is not subject to the Regulatory Flexibility Act since FSA is not required to publish a notice of proposed rulemaking for this rule.

Environmental Review

The environmental impacts of this rule have been considered in a manner consistent with the provisions of the National Environmental Policy Act (NEPA, 42 U.S.C. 4321–4347), the regulations of the Council on Environmental Quality (40 CFR parts 1500–1508), and FSA regulations for compliance with NEPA (7 CFR part 799). The rule change is a technical amendment and is solely administrative in nature. Therefore, FSA has determined that NEPA does not apply to this Final Rule and no environmental assessment or environmental impact statement will be prepared.

Executive Order 12372

Executive Order 12372, ''Intergovernmental Review of Federal Programs,'' requires consultation with State and local officials. The objectives of the Executive Order are to foster an intergovernmental partnership and a strengthened Federalism, by relying on State and local processes for State and local government coordination and review of proposed Federal Financial assistance and direct Federal development. This rule neither provides Federal Financial assistance or direct Federal development; it does not provide either grants or cooperative agreements. Therefore this program is not subject to Executive Order 12372.

Executive Order 12988

This rule has been reviewed under Executive Order 12988, ''Civil Justice Reform.'' This rule would not preempt State and or local laws, and regulations, or policies unless they present an irreconcilable conflict with this rule. Before any judicial action may be brought concerning the provisions of this rule, appeal provisions of 7 CFR parts 11 and 780 would need to be exhausted. This rule would not preempt a State or Tribal government law, including any State or Tribal government liability law.

Executive Order 13132

This rule has been reviewed under Executive Order 13132, ''Federalism.'' The policies contained in this rule do not have any substantial direct effect on States, on the relationship between the Federal government and the States, or on the distribution of power and responsibilities among the various levels of government. Nor does this rule impose substantial direct compliance costs on State and local governments. Therefore, consultation with the States is not required.

Executive Order 13175

This rule has been reviewed for compliance with Executive Order 13175, ''Consultation and Coordination with Indian Tribal Governments.'' The policies contained in this rule do not have Tribal implications that preempt Tribal law. FSA continues to consult with Tribal officials to have a meaningful consultation and collaboration on the development and strengthening of FSA regulations.

Unfunded Mandates

Title II of the Unfunded Mandates Reform Act of 1995 (UMRA, Pub. L. 104–4) requires Federal agencies to assess the effects of their regulatory actions on State, local, or Tribal governments or the private sector. Agencies generally must prepare a written statement, including a cost benefit analysis, for proposed and final rules with Federal mandates that may result in expenditures of $100 million or more in any 1 year for State, local, or Tribal governments, in the aggregate, or to the private sector. UMRA generally requires agencies to consider alternatives and adopt the more cost effective or least burdensome alternative that achieves the objectives of the rule. This rule contains no Federal mandates as defined by Title II of UMRA for State, local, or Tribal governments or for the private sector. Therefore, this rule is not subject to the requirements of sections 202 and 205 of UMRA.

Small Business Regulatory Enforcement Fairness Act of 1996

This rule is not a major rule under the Small Business Regulatory Enforcement Fairness Act of 1996 (Pub. L. 104–121, SBREFA). Therefore, FSA is not required to delay the effective date for 60 days from the date of publication to allow for Congressional review and this rule is effective on the date of publication in the **Federal Register**.

Federal Assistance Programs

The titles and numbers of the Federal assistance programs as found in the Catalog of Federal Domestic Assistance, to which this rule applies, are:

Livestock Indemnity Program—10.088.

Livestock Forage Disaster Program—10.089.

Supplemental Revenue Assistance Program—10.090.

Emergency Assistance for Livestock, Honeybees, and Farm-Raised Fish Program—10.091.

Tree Assistance Program—10.092.

Paperwork Reduction Act

These regulations are exempt from the requirements of the Paperwork Reduction Act (44 U.S.C. chapter 35), as specified in section 1601(c)(2) of the 2008 Farm Bill, which provides that these regulations be promulgated and administered without regard to the Paperwork Reduction Act.

E-Government Act Compliance

FSA is committed to complying with the E-Government Act, to promote the use of the Internet and other information technologies to provide increased opportunities for citizen access to Government information and services, and for other purposes.

List of Subjects in 7 CFR Part 760

Dairy products, Indemnity payments, Pesticide and pests, Reporting and recordkeeping requirements.

For the reasons discussed in the preamble, the Farm Service Agency (USDA) amends 7 CFR part 760 as follows:

PART 760—INDEMNITY PAYMENT PROGRAMS

■ 1. The authority citation for part 760 continues to read as follows:

Authority: 7 U.S.C. 4501, 7 U.S.C. 1531, 16 U.S.C. 3801, note, and 19 U.S.C. 2497; Title III, Pub. L. 109–234, 120 Stat. 474; Title IX, Pub. L. 110–28, 121 Stat. 211; and Sec. 748, Pub. L. 111–80, 123 Stat. 2131.

Subpart B—General Provisions for Supplemental Agricultural Disaster Assistance Programs

■ 2. Revise § 760.106 paragraph (a)(1), to read as follows:

§ 760.106 Equitable relief.

(a) * * *

(1) Are otherwise ineligible or provide evidence, satisfactory to FSA, that the failure to meet the requirements of § 760.104 for one or more eligible crops on the farm was unintentional and not because of any fault of the participant, as determined by the Secretary, or

* * * * *

§ 760.107 [Amended]

■ 3. Amend § 760.107, in paragraph (b)(2)(ii), by removing the words ''paragraph (a)'' and adding, in their place, the words ''paragraph (b)(2)(i)''.

Subpart C—Emergency Assistance for Livestock, Honeybees, and Farm-Raised Fish Program

■ 4. Revise § 760.203, paragraph (c)(2) to read as follows:

§ 760.203 Eligible losses, adverse weather, and other loss conditions.

* * * * *

(c) * * *

(2) Due to an eligible adverse weather event or loss condition that occurred on or after January 1, 2008, and before October 1, 2011.

* * * * *

■ 5. Revise § 760.204, paragraph (f)(1) to read as follows:

§ 760.204 Eligible livestock, honeybees, and farm-raised fish.

* * * * *

(f) * * *

(1) They must have died:

(i) On or after the beginning date of the eligible loss condition; and

(ii) On or after January 1, 2008, and no later than 60 calendar days from the ending date of the eligible loss condition, but before November 30, 2011; and

(iii) As a direct result of an eligible loss condition that occurs on or after January 1, 2008, and before October 1, 2011; and

(iv) In the calendar year for which payment is being requested; and

* * * * *

Subpart E—Livestock Indemnity Program

■ 4. Revise § 760.404, paragraph (c) to read as follows:

§ 760.404 Eligible livestock.

* * * * *

(c) To be considered eligible livestock for the purpose of generating payments under this subpart, livestock must meet all of the following conditions:

(1) Died as a direct result of an eligible adverse weather event that occurred on or after January 1, 2008, and before October 1, 2011;

(2) Died no later than 60 calendar days from the ending date of the applicable adverse weather event, but before November 30, 2011;

(3) Died in the calendar year for which benefits are being requested;

(4) Been maintained for commercial use as part of a farming operation on the day they died; and

(5) Before dying, not have been produced or maintained for reasons other than commercial use as part of a farming operation, such non-eligible uses being understood to include, but not be limited to, any uses of wild, free roaming animals or use of the animals for recreational purposes, such as pleasure, hunting, roping, pets, or for show.

* * * * *

Subpart G—Supplemental Revenue Assistance Payments Program

■ 5. Amend § 760.601 by adding a sentence at the end of paragraph (b) to read as follows:

§ 760.601 Applicability.

* * * * *

(b) * * * Crop losses must have occurred in crop year 2008 or subsequent crop years due to an eligible disaster event that occurs on or before September 30, 2011.

* * * * *

■ 6. Revise § 760.610, paragraph (a)(2), to read as follows:

§ 760.610 Participant eligibility.

(a) * * *

(2) Crop losses must have occurred in crop year 2008 or subsequent crop years due to an eligible disaster event that occurred on or before September 30, 2011.

(i) For insured crops, the coverage period, as defined in the insurance policy, must have begun on or before September 30, 2011;

(ii) For NAP crops, the coverage period must have begun on or before September 30, 2011; and

(iii) The final planting date for that crop according to the Federal crop insurance or NAP policy must have been on or before September 30, 2011.

* * * * *

Carolyn B. Cooksie,

Acting Administrator, Farm Service Agency.

[FR Doc. 2011–22323 Filed 8–30–11; 8:45 am]

BILLING CODE 3410–05–P

DEPARTMENT OF AGRICULTURE

Agricultural Marketing Service

7 CFR Part 927

[Doc. No. AMS–FV–11–0060; FV11–927–2 IR]

Pears Grown in Oregon and Washington; Assessment Rate Decrease for Fresh Pears

AGENCY: Agricultural Marketing Service, USDA.

ACTION: Interim rule with request for comments.

SUMMARY: This rule decreases the assessment rate established for the Fresh Pear Committee (Committee) for the 2011–2012 and subsequent fiscal periods from $0.501 to $0.471 per standard box or equivalent of fresh winter pears handled. The Committee locally administers the marketing order

which regulates the handling of fresh pears grown in Oregon and Washington. Assessments upon Oregon-Washington fresh pear handlers are used by the Committee to fund reasonable and necessary expenses of the program. The fiscal period begins July 1 and ends June 30. The assessment rate will remain in effect indefinitely unless modified, suspended, or terminated.

DATES: Effective September 1, 2011. Comments received by October 31, 2011, will be considered prior to issuance of a final rule.

ADDRESSES: Interested persons are invited to submit written comments concerning this rule. Comments must be sent to the Docket Clerk, Marketing Order Administration Branch, Fruit and Vegetable Programs, AMS, USDA, 1400 Independence Avenue, SW., STOP 0237, Washington, DC 20250–0237; Fax: (202) 720–8938; or Internet: *http://www.regulations.gov.* Comments should reference the document number and the date and page number of this issue of the **Federal Register** and will be available for public inspection in the Office of the Docket Clerk during regular business hours, or can be viewed at: *http://www.regulations.gov.* All comments submitted in response to this rule will be included in the record and will be made available to the public. Please be advised that the identity of the individuals or entities submitting the comments will be made public on the Internet at the address provided above.

FOR FURTHER INFORMATION CONTACT: Teresa Hutchinson or Gary Olson, Northwest Marketing Field Office, Marketing Order Administration Branch, Fruit and Vegetable Programs, AMS, USDA; Telephone: (503) 326–2724, Fax: (503) 326–7440, or E-mail: *Teresa.Hutchinson@ams.usda.gov* or *GaryD.Olson@ams.usda.gov.*

Small businesses may request information on complying with this regulation by contacting Laurel May, Marketing Order Administration Branch, Fruit and Vegetable Programs, AMS, USDA, 1400 Independence Avenue, SW., STOP 0237, Washington, DC 20250–0237; Telephone: (202) 720–2491, Fax: (202) 720–8938, or E-mail: *Laurel.May@ams.usda.gov.*

SUPPLEMENTARY INFORMATION: This rule is issued under Marketing Order No. 927, as amended (7 CFR part 927), regulating the handling of pears grown in Oregon and Washington, hereinafter referred to as the ''order.'' The order is effective under the Agricultural Marketing Agreement Act of 1937, as amended (7 U.S.C. 601–674), hereinafter referred to as the ''Act.''

The Department of Agriculture (USDA) is issuing this rule in conformance with Executive Order 12866.

This rule has been reviewed under Executive Order 12988, Civil Justice Reform. Under the marketing order now in effect, Oregon-Washington pear handlers are subject to assessments. Funds to administer the order are derived from such assessments. It is intended that the assessment rate as issued herein will be applicable to all assessable fresh winter pears beginning July 1, 2011, and continue until amended, suspended, or terminated.

The Act provides that administrative proceedings must be exhausted before parties may file suit in court. Under section 608c(15)(A) of the Act, any handler subject to an order may file with USDA a petition stating that the order, any provision of the order, or any obligation imposed in connection with the order is not in accordance with law and request a modification of the order or to be exempted therefrom. Such handler is afforded the opportunity for a hearing on the petition. After the hearing, USDA would rule on the petition. The Act provides that the district court of the United States in any district in which the handler is an inhabitant, or has his or her principal place of business, has jurisdiction to review USDA's ruling on the petition, provided an action is filed not later than 20 days after the date of the entry of the ruling.

This rule decreases the assessment rate established for the Committee for the 2011–2012 and subsequent fiscal periods from $0.501 to $0.471 per standard box or equivalent of fresh winter pears handled. The standard box or equivalent assessment rate for fresh ''summer/fall'' pears and ''other'' fresh pears would remain unchanged at $0.366 and $0.00, respectively.

The Oregon-Washington pear marketing order provides authority for the Committee, with USDA approval, to formulate an annual budget of expenses and to collect assessments from handlers to administer the fresh pear program. The members of the Committee are producers and handlers of Oregon-Washington fresh pears. They are familiar with the Committee's needs and with the costs for goods and services in their local area and are thus in a position to formulate an appropriate budget and assessment rate. The assessment rate is formulated and discussed at a public meeting. Thus, all directly affected persons have an opportunity to participate and provide input.

For the 2005–2006 and subsequent fiscal periods, the Committee recommended, and the USDA approved, the following three base rates of assessment: (a) $0.366 per standard box or equivalent for any or all varieties or subvarieties of fresh pears classified as ''summer/fall''; (b) $0.501 per standard box or equivalent for any or all varieties or subvarieties of fresh pears classified as ''winter''; and (c) $0.000 per standard box or equivalent for any or all varieties or subvarieties of fresh pears classified as ''other''. These assessment rates would continue in effect from fiscal period to fiscal period unless modified, suspended, or terminated by USDA upon recommendation and information submitted by the Committee or other information available to USDA.

The Committee met on June 3, 2011, and unanimously recommended 2011–2012 expenditures of $8,827,860 and an assessment rate of $0.471 per standard box or equivalent of fresh winter pears handled. In comparison, last year's budgeted expenditures were $9,262,200. The assessment rate of $0.471 is $0.03 lower than the rate previously in effect. The Committee recommended the assessment rate decrease because the winter pear promotion budget for the 2011–2011 fiscal period was reduced.

The major expenditures recommended by the Committee for the 2011–2012 fiscal period include $437,160 for contracted administration by Pear Bureau Northwest, $610,700 for production research and market development, $6,355,000 for promotion and paid advertising for winter pears, and $1,260,000 for promotion and paid advertising for summer/fall pears. In comparison, major expenses for the 2010–2011 fiscal period included $482,500 for contracted administration by Pear Bureau Northwest, $610,700 for production research and market development, $6,600,000 for promotion and paid advertising for winter pears, and $1,410,000 for promotion and paid advertising for summer/fall pears.

The Committee based its recommended assessment rate for fresh winter pears on the 2011–2012 fresh winter pear crop estimate, the 2011–2012 program expenditure needs, and the current and projected size of its monetary reserve. Applying the $0.471 per standard box or equivalent assessment rate to the Committee's 15,500,000 standard box or equivalent fresh winter pear crop estimate should provide $7,300,500 in assessment income. The quantity of assessable fresh summer/fall pears for the 2011–2012 fiscal period is estimated at 4,200,000 standard boxes or equivalent. The summer/fall fresh pear assessment rate

of $0.366 per standard box or equivalent should provide $1,537,200 in assessment income. Thus, income derived from winter and summer/fall fresh pear handler assessments ($8,837,700) and interest and miscellaneous income ($20,000) would be adequate to cover the recommended $8,827,860 budget for 2011–2012. Funds in the reserve were $1,040,646 as of June 30, 2010. The Committee estimates that $61,117 will be deducted from the reserve to cover budgeted expenses for 2010–2011. The Committee estimates a reserve of $979,529 on June 30, 2011. For 2011–2012, the Committee estimates that $29,840 will be added to the reserve for an estimated reserve of $1,009,369 on June 30, 2012, which would be within the maximum permitted by the order of approximately one fiscal period's operational expenses (§ 927.42).

The assessment rate established in this rule will continue in effect indefinitely unless modified, suspended, or terminated by USDA upon recommendation and information submitted by the Committee or other available information.

Although this assessment rate is effective for an indefinite period, the Committee will continue to meet prior to or during each fiscal period to recommend a budget of expenses and consider recommendations for modification of the assessment rate. The dates and times of Committee meetings are available from the Committee or USDA. Committee meetings are open to the public and interested persons may express their views at these meetings. USDA will evaluate Committee recommendations and other available information to determine whether modification of the assessment rate is needed. Further rulemaking will be undertaken as necessary. The Committee's 2011–2012 budget and those for subsequent fiscal periods will be reviewed and, as appropriate, approved by USDA.

Initial Regulatory Flexibility Analysis

Pursuant to requirements set forth in the Regulatory Flexibility Act (RFA) (5 U.S.C. 601–612), the Agricultural Marketing Service (AMS) has considered the economic impact of this rule on small entities. Accordingly, AMS has prepared this initial regulatory flexibility analysis.

The purpose of the RFA is to fit regulatory actions to the scale of business subject to such actions in order that small businesses will not be unduly or disproportionately burdened. Marketing orders issued pursuant to the Act, and the rules issued thereunder, are unique in that they are brought about through group action of essentially small entities acting on their own behalf.

There are approximately 1,581 growers of fresh pears in the regulated production area and approximately 38 handlers of fresh pears subject to regulation under the order. Small agricultural growers are defined by the Small Business Administration (SBA) (13 CFR 121.201) as those having annual receipts of less than $750,000, and small agricultural service firms are defined as those whose annual receipts are less than $7,000,000.

According to the Noncitrus Fruits and Nuts 2010 Summary issued in July 2011 by the National Agricultural Statistics Service, the average price for fresh pears in 2010 was $591 per ton. The 2010 farm-gate value of fresh pears grown in Oregon and Washington is estimated at approximately $249,500,579, based on shipments of 19,189,400 44-pound standard boxes. Based on the number of fresh pear growers in the Oregon and Washington, the average gross revenue for each grower can be estimated at approximately $157,812. Furthermore, based on Committee records, the Committee has estimated that 56 percent of Northwest pear handlers currently ship less than $7,000,000 worth of fresh pears on an annual basis. From this information, it is concluded that the majority of growers and handlers of Oregon and Washington fresh pears may be classified as small entities.

This rule decreases the assessment rate established for the Committee and collected from handlers for the 2011–2012 and subsequent fiscal periods from $0.501 to $0.471 per standard box or equivalent of fresh winter pears handled. The Committee unanimously recommended 2011–2012 expenditures of $8,827,860 and an assessment rate of $0.471 per standard box or equivalent of fresh winter pears. The assessment rate of $0.471 is $0.03 lower than the previous rate. The Committee recommended the assessment rate decrease because the winter pear promotion budget for the 2011–2012 fiscal period was reduced.

The quantity of assessable fresh winter pears for the 2011–2012 fiscal period is estimated at 15,500,000 standard boxes or equivalent. Thus, the $0.471 rate should provide $7,300,500 in assessment income. Applying the $0.366 per standard box or equivalent assessment rate to the Committee's 4,200,000 standard box or equivalent fresh summer/fall pear crop estimate should provide $1,537,200 in assessment income. Income derived from winter and summer/fall fresh pear handler assessments ($8,837,700) and interest and miscellaneous income ($20,000) would be adequate to cover the budgeted expenses.

The major expenditures recommended by the Committee for the 2011–2012 fiscal period include $437,160 for contracted administration by Pear Bureau Northwest, $610,700 for production research and market development, $6,355,000 for promotion and paid advertising for winter pears, and $1,260,000 for promotion and paid advertising for summer/fall pears. In comparison, major expenses for the 2010–2011 fiscal period included $482,500 for contracted administration by Pear Bureau Northwest, $610,700 for production research and market development, $6,600,000 for promotion and paid advertising for winter pears, and $1,410,000 for promotion and paid advertising for summer/fall pears.

The Committee discussed alternate lower rates of assessment, but determined that the recommended assessment rate would be sufficient to fund the 2011–2012 fresh winter pear programs.

A review of historical information and preliminary information pertaining to the upcoming fiscal period indicates that the grower price for the 2011–2012 fiscal period could range between $372 and $456 per ton of pears. Therefore, the estimated assessment revenue for the 2011–2012 fiscal period as a percentage of total grower revenue could range between 5.75 and 4.69 percent.

This action decreases the assessment obligation imposed on handlers. Assessments are applied uniformly on all handlers, and some of the costs may be passed on to producers. However, decreasing the assessment rate reduces the burden on handlers, and may reduce the burden on producers.

In addition, the Committee's meeting was widely publicized throughout the Oregon-Washington pear industry and all interested persons were invited to attend the meeting and participate in Committee deliberations on all issues. Like all Committee meetings, the June 3, 2011, meeting was a public meeting and all entities, both large and small, were able to express views on this issue. Finally, interested persons are invited to submit comments on this interim rule, including the regulatory and informational impacts of this action on small businesses.

In accordance with the Paperwork Reduction Act of 1991 (44 U.S.C. Chapter 35), the order's information collection requirements have been previously approved by the Office of Management and Budget (OMB) and assigned OMB No. 0581–0189, Generic

Fruit Crops. No changes in those requirements as a result of this action are anticipated. Should any changes become necessary, they would be submitted to OMB for approval.

This action imposes no additional reporting or recordkeeping requirements on either small or large Oregon-Washington fresh pear handlers. As with all Federal marketing order programs, reports and forms are periodically reviewed to reduce information requirements and duplication by industry and public sector agencies.

AMS is committed to complying with the E-Government Act, to promote the use of the Internet and other information technologies to provide increased opportunities for citizen access to Government information and services, and for other purposes.

USDA has not identified any relevant Federal rules that duplicate, overlap, or conflict with this rule.

A small business guide on complying with fruit, vegetable, and specialty crop marketing agreements and orders may be viewed at: *http://www.ams.usda.gov/MarketingOrdersSmallBusinessGuide.* Any questions about the compliance guide should be sent to Laurel May at the previously mentioned address in the **FOR FURTHER INFORMATION CONTACT** section.

After consideration of all relevant material presented, including the information and recommendation submitted by the Committee and other available information, it is hereby found that this rule, as hereinafter set forth, will tend to effectuate the declared policy of the Act.

Pursuant to 5 U.S.C. 553, it is also found and determined upon good cause that it is impracticable, unnecessary, and contrary to the public interest to give preliminary notice prior to putting this rule into effect, and that good cause exists for not postponing the effective date of this rule until 30 days after publication in the **Federal Register** because: (1) The 2011–2012 fiscal period begins on July 1, 2011, and the marketing order requires that the rate of assessment for each fiscal period apply to all assessable pears handled during such fiscal period; (2) this action decreases the assessment rate for assessable fresh winter pears beginning with the 2011–2012 fiscal period; (3) handlers are aware of this action which was unanimously recommended by the Committee at a public meeting and is similar to other assessment rate actions issued in past years; and (4) this interim rule provides a 60-day comment period, and all comments timely received will be considered prior to finalization of this rule.

List of Subjects in 7 CFR Part 927

Marketing agreements, Pears, Reporting and recordkeeping requirements.

For the reasons set forth in the preamble, 7 CFR part 927 is amended as follows:

PART 927—PEARS GROWN IN OREGON AND WASHINGTON

■ 1. The authority citation for 7 CFR part 927 continues to read as follows:

Authority: 7 U.S.C. 601–674.

■ 2. In § 927.236, the introductory text and paragraph (b) are revised to read as follows:

§ 927.236 Fresh pear assessment rate.

On and after July 1, 2011, the following base rates of assessment for fresh pears are established for the Fresh Pear Committee:

* * * * *

(b) $0.471 per 44-pound net weight standard box or container equivalent for any or all varieties or subvarieties of fresh pears classified as ''winter''; and

* * * * *

Dated: August 19, 2011.

David R. Shipman,

Acting Administrator, Agricultural Marketing Service.

[FR Doc. 2011–22113 Filed 8–30–11; 8:45 am]

BILLING CODE 3410–02–P

DEPARTMENT OF AGRICULTURE

Agricultural Marketing Service

7 CFR Part 1205

[Doc. # AMS–CN–11–0026; CN–11–002]

Cotton Board Rules and Regulations: Adjusting Supplemental Assessment on Imports

AGENCY: Agricultural Marketing Service, USDA.

ACTION: Final rule.

SUMMARY: The Agricultural Marketing Service (AMS) is amending the Cotton Board Rules and Regulations by updating the value assigned to imported cotton for the purpose of calculating supplemental assessments collected for use by the Cotton Research and Promotion Program. An amendment is required to adjust the supplemental assessment and to ensure that assessments collected on imported raw cotton and the cotton content of imported cotton-containing products are the same as assessments collected on domestically produced cotton. In addition, AMS is updating the textile trade conversion factors used to determine the raw fiber equivalents of imported cotton-containing products and expanding the number of Harmonized Tariff Schedule (HTS) statistical reporting numbers from the current 706 to 2,371 to assess all imported cotton and cotton-containing products.

DATES: *Effective Date:* September 30, 2011.

FOR FURTHER INFORMATION CONTACT: Shethir M. Riva, Chief, Research and Promotion Staff, Cotton and Tobacco Programs, AMS, USDA, Stop 0224, 1400 Independence Ave., SW., Room 2635–S, Washington, DC 20250–0224, telephone (540) 361–2726, facsimile (202) 690–1718, or e-mail at *Shethir.Riva@ams.usda.gov.*

SUPPLEMENTARY INFORMATION:

Executive Order 12866

The Office of Management and Budget has waived the review process required by Executive Order 12866 for this action.

Executive Order 12988

This rule has been reviewed under Executive Order 12988, Civil Justice Reform. It is not intended to have retroactive effect.

The Cotton Research and Promotion Act (7 U.S.C. 2101–2118) (Act) provides that administrative proceedings must be exhausted before parties may file suit in court. Under section 12 of the Act, any person subject to an order may file with the Secretary of Agriculture (Secretary) a petition stating that the order, any provision of the plan, or any obligation imposed in connection with the order is not in accordance with law and requesting a modification of the order or to be exempted therefrom. Such person is afforded the opportunity for a hearing on the petition. After the hearing, the Secretary would rule on the petition. The Act provides that the District Court of the United States in any district in which the person is an inhabitant, or has his principal place of business, has jurisdiction to review the Secretary's ruling, provided a complaint is filed within 20 days from the date of the entry of ruling.

Background

Import Assessment

Amendments to the Act were enacted by Congress under Subtitle G of Title XIX of the Food, Agriculture, Conservation, and Trade Act of 1990

(Pub. L. 101–624, 104 Stat. 3909, November 28, 1990). These amendments contained two provisions that authorized changes in the funding procedures for the Cotton Research and Promotion Program.

These provisions are: (1) The authority to assess imported cotton and cotton products; and (2) the termination of the right of cotton producers to demand a refund of assessments.

As amended, the Cotton Research and Promotion Order (7 CFR part 1205) (Order) was approved by cotton producers and importers voting in a referendum held July 17–26, 1991, and the amended Order was published in the **Federal Register** on December 10, 1991, (56 FR 64470). A proposed rule implementing the amended Order was published in the **Federal Register** on December 17, 1991, (56 FR 65450). Implementing rules were published on July 1 and 2, 1992, (57 FR 29181) and (57 FR 29431), respectively.

This rule increases the value assigned to imported cotton in the Cotton Board Rules and Regulations (7 CFR 1205.510(b)(2)). The total value of assessments levied is determined using a two-part assessment. The first part of the assessment is levied on the weight of cotton imported at a rate of $1 per 500-pound bale of cotton or $1 per 226.8 kilograms of cotton. The second part of the assessment—known as the supplemental assessment—is levied at a rate of five-tenths of one percent of the value of imported raw cotton or the cotton content of imported cotton-containing products. The supplemental assessment is combined with the per bale equivalent to determine the total value and assessment of the imported cotton or imported cotton-containing products.

Section 1205.510(b)(2) of the Cotton Research and Promotion Rules and Regulations provides for the calendar year weighted average price received by U.S. farmers for Upland cotton to represent the value of domestically produced cotton, imported raw cotton and the cotton content of imported cotton-containing products. Use of the same weighted average price ensures that assessments paid on domestically produced cotton and assessments on imported cotton are the same. The source of price statistics is *Agricultural Prices,* a publication of the National Agricultural Statistics Service (NASS) of the Department of Agriculture.

The current value of imported cotton as published in the **Federal Register** (74 FR 32400) for the purpose of calculating assessments on imported cotton is $0.010880 per kilogram. Using the weighted average price received by U.S. farmers for Upland cotton for the calendar year 2010, the new value of imported cotton is $0.012665 per kilogram.

An example of the complete assessment formula and how the figures are obtained is as follows:

One bale is equal to 500 pounds.

One kilogram equals 2.2046 pounds.

One pound equals 0.453597 kilograms.

One Dollar Per Bale Assessment Converted to Kilograms

A 500-pound bale equals 226.8 kg. (500 × .453597).

$1 per bale assessment equals $0.002 per pound or 0.2 cents per pound (1/500) or $0.004409 per kg or 0.4409 cents per kg. (1/226.8).

Supplemental Assessment of 5/10 of One Percent of the Value of the Cotton Converted to Kilograms

The 2010 calendar year weighted average price received by producers for Upland cotton is $0.749 per pound or $1.651 per kg. (0.749 × 2.2046).

Five tenths of one percent of the weighted average price in kilograms equals $0.008256 per kg. (1.651 × .005).

Total Assessment

The total assessment per kilogram of raw cotton is obtained by adding the $1 per bale equivalent assessment of $0.004409 per kg. and the supplemental assessment $0.008256 per kg., which equals $0.012665 per kg.

The current assessment on imported cotton is $0.01088 per kilogram of imported cotton. The new assessment is $0.012665, an increase of $0.001785 per kilogram. This increase reflects the increase in the average weighted price of Upland Cotton Received by U.S. Farmers during the period January through December 2010. The Import Assessment Table in section 1205.510(b)(3) indicates the conversion factors used to estimate cotton equivalent quantities and the total assessment per kilogram due for each HTS number subject to assessment. Since the weighted average price of cotton that serves as the basis of the supplemental assessment calculation has changed, total assessment rates reported in this table have been revised.

Conversion Factors

USDA's Economic Research Service (ERS) regularly publishes textile trade data which includes estimates of the amount of cotton contained in imported cotton products. The raw cotton equivalent is the estimated weight of the cotton fiber in the garment adjusted for waste that occurs in spinning, weaving, and cutting. To estimate raw cotton equivalents, ERS uses a set of cotton textile trade conversion factors. The Agricultural Marketing Service (AMS) currently uses a subset of these conversion factors to estimate cotton equivalents contained in cotton textile products imported into the U.S., which serve as the basis for collecting cotton import assessments for the Cotton Research and Promotion Program.

ERS periodically evaluates how technology-driven improvements in textile production efficiencies—reductions in yarn waste—impacts the total quantity of raw cotton consumed in the production of various textile products. Such an evaluation was conducted initially in 1989 shortly after the U.S. adopted the international system of harmonized tariff codes, again in 2000, and most recently in 2009. The 2009 evaluation of conversion factors, which was based on two published studies,[1] concluded that technological advancements in textile production processes have significantly changed since the current conversion factors were established. Furthermore, factors used to convert imported textile products into raw cotton bale-equivalent quantities were revised. Results of the ERS study were published in *Cotton and Wool Outlook,* October 13, 2009.[2]

An analysis of these cotton trade conversion factors for a subset of cotton textile imports on which cotton import assessments are collected revealed that the differences between the current conversion factors and revised conversion factors represent an approximate 4.7 percent reduction in cotton (177 million kilogram) or $1.93 million less in assessments (177 million kilograms * $0.01088/kilogram = $1.93 million). Therefore, AMS adopts the revised and expanded textile trade conversion factors in the Import Assessment Table that appears in section 1205.510(b)(3)(ii) in the regulations to reflect updated textile technologies and to more accurately estimate the amount of cotton contained

[1] MacDonald, Stephen. *China's Cotton Supply and Demand: Issues and Impact on the World Market,* CWS–071–01, November 2007, U.S. Department of Agriculture, Economic Research Service, *http://www.ers.usda.gov/publications/CWS/2007/11Nov/CWS07I01/.*

MacDonald, Stephen and Sarah Whitley. *Fiber Use for Textiles and China's Cotton Textile Exports,* CWS–08i–01, March 2009, U.S. Department of Agriculture, Economic Research Service, *http://www.ers.usda.gov/Publications/CWS/2009/03Mar/CWS08i01/.*

[2] Meyer, Leslie, Stephen MacDonald and James Kiawu. *Cotton and Wool Outlook,* CWS–09h, October 13, 2009, U.S. Department of Agriculture, Economic Research Service, *http://usda.mannlib.cornell.edu/usda/ers/CWS//2000s/2009/CWS-10-13-2009.pdf.*

in cotton-containing imports. This will assure a more fair and accurate assessment of imported cotton-containing products.

HTS Codes

In a 2010 report, ERS determined that the current set of HTS codes used by AMS for research and promotion assessment purposes accounted for 89 percent of the total U.S. cotton product imports leaving 11 percent (442 million kilograms) of imported cotton products unassessed. By expanding AMS' list to include 2,371 HTS codes and using the current assessment rate of $0.01088 per kilogram, the Cotton Research and Promotion Program could have collected approximately $4.81 million more in 2009. Based on these findings, the Board requested that AMS take necessary steps to publish its annual import assessment update with updated conversion factors and to increase the number of HTS codes from 706 to 2,371 so that the program collects close to 100 percent on imported cotton and cotton-containing products, as it does with the domestic producer assessment. AMS is expanding the list of HTS codes included in 7 CFR part 1205 to include all HTS codes for cotton and cotton-containing products for the collection of import assessments.

Summary of Comments

A proposed rule was published on June 3, 2011, with a comment period of June 3, 2011, through July 5, 2011 (76 FR 32088). AMS received 12 comments from individuals and various organizations representing segments of the cotton or manufacturing industry. Eight comments came from those supporting the proposed rule, including one from the Cotton Board who administers the Cotton Research and Promotion Program. AMS received three opposing comments and one comment from an individual who took no position but questioned parts of the proposed rule. All comments received are available for public inspection at Cotton and Tobacco Programs, AMS, USDA, Stop 0224, 1400 Independence Ave., SW., Room 2635–S, Washington, DC 20250–0224 during regular business hours. Comments may also be found at *http://www.regulations.gov.*

Overall, the comments were favorable in support of both the proposed changes and the Cotton Research and Promotion Program.

Of the commenters, two commenters opposed the proposed rule, but believed that the Cotton Research and Promotion Program has merit and numerous benefits. The commenters expressed concerned over the proposed increase in the cotton assessment and argued that it would burden companies. The commenters referenced the volatility of the cotton market and increases in cotton prices witnessed over the past 12–18 months, and they objected to any revised assessment that would result in an increase in the amount of fees that are paid by importers under the Cotton Research and Promotion Program. In addition, one individual stated that this is not an appropriate time to pass along additional fees or cost to consumers given the burdens of unemployment and suggested decreasing the producers assessment to coincide with the current importer fee. Section 1205.510, ''Levy of assessments'', provides ''the rate of the supplemental assessment on imported cotton will be the same as that levied on cotton produced within the United States.'' In addition, section 1205.510 provides that the 12-month average of monthly weighted average prices received by U.S. farmers will be used as the value of imported cotton for the purpose of levying the supplemental assessment on imported cotton. AMS used the 2010 price statistics found in *Agricultural Prices,* a publication of the National Agricultural Statistics Service of the Department of Agriculture, to calculate the average weighted price and convert it to arrive at the new rate of 1.2665 cents per kilogram. Therefore, AMS has made no changes to the proposed rule based on these comments.

Four organizations encouraged USDA to streamline the process for annually calculating the value of cotton and ensure that the value is calculated at approximately the same time each year. AMS is currently exploring possible options to streamline the process.

AMS received a comment questioning the proposed list of HTS codes and identified some examples of proposed codes that are categorized in the HTS as containing only man-made fibers. The commenter surmised that if no cotton is contained in these HTS codes, then the codes should not be assessed the cotton fee or have a conversion factor.

The proposed rule contained all HTS codes identified by ERS in its 2009 study as containing some cotton. AMS in turn uses these HTS codes for assessment purposes. While the HTS codes noted by the commenter are indeed HTS codes classified by the International Trade Commission as being man-made fiber products, they are not considered 100 percent man-made fibers and, therefore, are estimated to contain small percentages of other fibers, like cotton. This would also hold true for mostly cotton fiber products, as not all codes labeled as cotton products are considered 100 percent cotton. In fact, only about 11 percent of the total textile codes noted is considered 100 percent cotton.

According to ERS, the goal of the estimation process established by ERS is to determine the accumulated quantities of raw fiber contained in both imported and exported textile products and how these quantities change over time. While it is possible for an individual textile product—or even a particular shipment within a given textile product code—to contain a larger (or smaller) percentage of an individual fiber than estimated by ERS, the purpose is to estimate the most common and average fiber makeup of each textile HTS code.

It is the responsibility of the Cotton Board to collect assessments on cotton and cotton-containing products. ERS concluded that products classified with man-made fiber HTS codes are estimated to contain other fibers, including cotton, and conversion factors have been calculated to determine the average amount. The Cotton Research and Promotion Program will used the amount of cotton to calculate the assessment.

AMS agrees that there is a possibility of select import products identified as containing cotton actually being composed of 100 percent man-made fibers. The Cotton Research and Promotion regulations in section 1205.336 provides for a remedy. If an importer has paid assessments and can prove that such assessment was made on fiber other than Upland cotton, the importer has the right to request and receive a reimbursement from the Cotton Board.

Regulatory Flexibility Act and Paperwork Reduction Act

In accordance with the Regulatory Flexibility Act (RFA) [5 U.S.C. 601–612], AMS examined the economic impact of this rule on small entities. The purpose of the RFA is to fit regulatory actions to the scale of businesses subject to such action so that small businesses will not be unduly or disproportionately burdened. The Small Business Administration defines, in 13 CFR part 121, small agricultural producers as those having annual receipts of no more than $750,000 and small agricultural service firms (importers) as having receipts of no more than $7,000,000. An estimated 13,000 importers are subject to the rules and regulations issued pursuant to the Cotton Research and Promotion Order. Most are considered small entities as defined by the Small Business Administration.

This final rule only affects importers of cotton and cotton-containing products, and it raises the assessments

paid by the importers under the Cotton Research and Promotion Order. The current assessment on imported cotton is $0.01088 per kilogram, which is equivalent to 1.088 cents per kilogram, of imported cotton. The new assessment is $.012665 which is equivalent to 1.2665 cents per kilogram and was calculated based on the 12-month average of monthly weighted average prices received by U.S. cotton farmers. Section 1205.510, ''Levy of assessments'', provides ''the rate of the supplemental assessment on imported cotton will be the same as that levied on cotton produced within the United States.'' In addition, section 1205.510 provides that the 12-month average of monthly weighted average prices received by U.S. farmers will be used as the value of imported cotton for the purpose of levying the supplemental assessment on imported cotton. AMS used the 2010 price statistics found in *Agricultural Prices,* a publication of the National Agricultural Statistics Service of the Department of Agriculture, to calculate the average weighted price and convert it to arrive at the new rate of 1.2665 cents per kilogram as detailed in the Background section.

Under the Cotton Research and Promotion Program, assessments are used by the Cotton Board to finance research and promotion programs designed to increase consumer demand for Upland cotton within the United States and international markets. In 2010, producer assessments totaled $46.5 million and importer assessments totaled $38.2 million. According to the Cotton Board, should the volume of cotton products imported into the U.S. remain at the same level in 2011, one could expect the increased importer assessment to generate approximately $10.8 million.

Importers with line-items appearing on U.S. Customs and Border Protection documentation with value of the cotton contained therein results of an assessment of two dollars ($2.00) or less will not be subject to assessments. In addition, imported cotton and products may be exempt from assessment if the cotton content of products is U.S. produced, cotton other than Upland, or imported products that are eligible to be labeled as 100 percent organic under the National Organic Program (7 CFR part 205) and who is not a split operation.

There are no Federal rules that duplicate, overlap, or conflict with this rule.

In compliance with Office of Management and Budget (OMB) regulations (5 CFR part 1320) which implement the Paperwork Reduction Act (PRA) (44 U.S.C. Chapter 35) the information collection requirements contained in the regulation that needed to be amended have been previously approved by OMB and were assigned control number 0581–0093. This rule does not result in a change to the information collection and recordkeeping requirements previously approved.

List of Subjects in 7 CFR Part 1205

Advertising, Agricultural research, Cotton, Marketing agreements, Reporting and recordkeeping requirements.

For the reasons set forth in the preamble 7 CFR part 1205 is amended as follows:

PART 1205—COTTON RESEARCH AND PROMOTION

■ 1. The authority citation for part 1205 continues to read as follows:

Authority: 7 U.S.C. 2101–2118.

■ 2. In § 1205.510, paragraph (b)(2) and the table in paragraph (b)(3)(ii) are revised to read as follows:

§ 1205.510 Levy of assessments.

* * * * *

(b) * * *

(2) The 12-month average of monthly weighted average prices received by U.S. farmers will be calculated annually. Such weighted average will be used as the value of imported cotton for the purpose of levying the supplemental assessment on imported cotton and will be expressed in kilograms. The value of imported cotton for the purpose of levying this supplemental assessment is 1.2665 cents per kilogram.

(3) * * *

(ii) * * *

IMPORT ASSESSMENT TABLE

[Raw cotton fiber]

HTS No.	Conv. fact.	Cents/kg.
5201000500	0	1.2665
5201001200	0	1.2665
5201001400	0	1.2665
5201001800	0	1.2665
5201002200	0	1.2665
5201002400	0	1.2665
5201002800	0	1.2665
5201003400	0	1.2665
5201003800	0	1.2665
5204110000	1.0526	1.3332
5204200000	1.0526	1.3332
5208112020	1.0852	1.3744
5208112040	1.0852	1.3744
5208112090	1.0852	1.3744
5208114020	1.0852	1.3744
5208114040	1.0852	1.3744
5208114060	1.0852	1.3744
5208114090	1.0852	1.3744

IMPORT ASSESSMENT TABLE—Continued

[Raw cotton fiber]

HTS No.	Conv. fact.	Cents/kg.
5208116000	1.0852	1.3744
5208118020	1.0852	1.3744
5208118090	1.0852	1.3744
5208124020	1.0852	1.3744
5208124040	1.0852	1.3744
5208124090	1.0852	1.3744
5208126020	1.0852	1.3744
5208126040	1.0852	1.3744
5208126060	1.0852	1.3744
5208126090	1.0852	1.3744
5208128020	1.0852	1.3744
5208128090	1.0852	1.3744
5208130000	1.0852	1.3744
5208192020	1.0852	1.3744
5208192090	1.0852	1.3744
5208194020	1.0852	1.3744
5208194090	1.0852	1.3744
5208196020	1.0852	1.3744
5208196090	1.0852	1.3744
5208198020	1.0852	1.3744
5208198090	1.0852	1.3744
5208212020	1.0852	1.3744
5208212040	1.0852	1.3744
5208212090	1.0852	1.3744
5208214020	1.0852	1.3744
5208214040	1.0852	1.3744
5208214060	1.0852	1.3744
5208214090	1.0852	1.3744
5208216020	1.0852	1.3744
5208216090	1.0852	1.3744
5208224020	1.0852	1.3744
5208224040	1.0852	1.3744
5208224090	1.0852	1.3744
5208226020	1.0852	1.3744
5208226040	1.0852	1.3744
5208226060	1.0852	1.3744
5208226090	1.0852	1.3744
5208228020	1.0852	1.3744
5208228090	1.0852	1.3744
5208230000	1.0852	1.3744
5208292020	1.0852	1.3744
5208292090	1.0852	1.3744
5208294020	1.0852	1.3744
5208294090	1.0852	1.3744
5208296020	1.0852	1.3744
5208296090	1.0852	1.3744
5208298020	1.0852	1.3744
5208298090	1.0852	1.3744
5208312000	1.0852	1.3744
5208314020	1.0852	1.3744
5208314040	1.0852	1.3744
5208314090	1.0852	1.3744
5208316020	1.0852	1.3744
5208316040	1.0852	1.3744
5208316060	1.0852	1.3744
5208316090	1.0852	1.3744
5208318020	1.0852	1.3744
5208318090	1.0852	1.3744
5208321000	1.0852	1.3744
5208323020	1.0852	1.3744
5208323040	1.0852	1.3744
5208323090	1.0852	1.3744
5208324020	1.0852	1.3744
5208324040	1.0852	1.3744
5208324060	1.0852	1.3744
5208324090	1.0852	1.3744
5208325020	1.0852	1.3744
5208325090	1.0852	1.3744
5208330000	1.0852	1.3744

IMPORT ASSESSMENT TABLE—Continued

[Raw cotton fiber]

HTS No.	Conv. fact.	Cents/kg.
5208392020	1.0852	1.3744
5208392090	1.0852	1.3744
5208394020	1.0852	1.3744
5208394090	1.0852	1.3744
5208396020	1.0852	1.3744
5208396090	1.0852	1.3744
5208398020	1.0852	1.3744
5208398090	1.0852	1.3744
5208412000	1.0852	1.3744
5208414000	1.0852	1.3744
5208416000	1.0852	1.3744
5208418000	1.0852	1.3744
5208421000	1.0852	1.3744
5208423000	1.0852	1.3744
5208424000	1.0852	1.3744
5208425000	1.0852	1.3744
5208430000	1.0852	1.3744
5208492000	1.0852	1.3744
5208494010	1.0852	1.3744
5208494020	1.0852	1.3744
5208494090	1.0852	1.3744
5208496010	1.0852	1.3744
5208496020	1.0852	1.3744
5208496030	1.0852	1.3744
5208496090	1.0852	1.3744
5208498020	1.0852	1.3744
5208498090	1.0852	1.3744
5208512000	1.0852	1.3744
5208514020	1.0852	1.3744
5208514040	1.0852	1.3744
5208514090	1.0852	1.3744
5208516020	1.0852	1.3744
5208516040	1.0852	1.3744
5208516060	1.0852	1.3744
5208516090	1.0852	1.3744
5208518020	1.0852	1.3744
5208518090	1.0852	1.3744
5208521000	1.0852	1.3744
5208523020	1.0852	1.3744
5208523035	1.0852	1.3744
5208523040	1.0852	1.3744
5208523045	1.0852	1.3744
5208523090	1.0852	1.3744
5208524020	1.0852	1.3744
5208524035	1.0852	1.3744
5208524040	1.0852	1.3744
5208524045	1.0852	1.3744
5208524055	1.0852	1.3744
5208524065	1.0852	1.3744
5208524090	1.0852	1.3744
5208525020	1.0852	1.3744
5208525090	1.0852	1.3744
5208591000	1.0852	1.3744
5208592015	1.0852	1.3744
5208592025	1.0852	1.3744
5208592085	1.0852	1.3744
5208592090	1.0852	1.3744
5208592095	1.0852	1.3744
5208594020	1.0852	1.3744
5208594090	1.0852	1.3744
5208596020	1.0852	1.3744
5208596090	1.0852	1.3744
5208598020	1.0852	1.3744
5208598090	1.0852	1.3744
5209516015	1.0852	1.3744
5209516025	1.0852	1.3744
5209516032	1.0852	1.3744
5209516035	1.0852	1.3744
5209516050	1.0852	1.3744

IMPORT ASSESSMENT TABLE—Continued

[Raw cotton fiber]

HTS No.	Conv. fact.	Cents/kg.
5209516090	1.0852	1.3744
5209520020	1.0852	1.3744
5209520040	1.0852	1.3744
5209590015	1.0852	1.3744
5209590025	1.0852	1.3744
5209590040	1.0852	1.3744
5209590060	1.0852	1.3744
5209590090	1.0852	1.3744
5607909000	0.8421	1.0665
5702491020	0.8947	1.1332
5702491080	0.8947	1.1332
5702990500	0.8947	1.1332
5702991500	0.8947	1.1332
5801250010	1.0852	1.3744
5803001000	1.0852	1.3744
5805003000	1.0852	1.3744
5901904000	0.8139	1.0308
5904901000	0.0326	0.0412
5907002500	0.3798	0.4810
5907003500	0.3798	0.4810
5907008090	0.3798	0.4810
6006211000	1.0965	1.3887
6006221000	1.0965	1.3887
6006231000	1.0965	1.3887
6006241000	1.0965	1.3887
6107910030	1.1918	1.5095
6107910040	1.1918	1.5095
6108210010	1.1790	1.4932
6108210020	1.1790	1.4932
6108910005	1.1790	1.4932
6108910015	1.1790	1.4932
6108910025	1.1790	1.4932
6108910030	1.1790	1.4932
6108910040	1.1790	1.4932
6111201000	1.1918	1.5095
6111202000	1.1918	1.5095
6115101510	1.0965	1.3887
6115198010	1.0965	1.3887
6115298010	1.0965	1.3887
6116101300	0.3463	0.4385
6116101720	0.8079	1.0233
6116926430	1.1542	1.4618
6116927460	1.1542	1.4618
6117808710	1.1542	1.4618
6117909003	1.1542	1.4618
6117909020	1.1542	1.4618
6117909040	1.1542	1.4618
6117909060	1.1542	1.4618
6117909080	1.1542	1.4618
6201122025	0.9979	1.2638
6201122035	0.9979	1.2638
6201922021	1.2193	1.5443
6201922031	1.2193	1.5443
6201922041	1.2193	1.5443
6202122025	1.2332	1.5618
6202122035	1.2332	1.5618
6202921000	0.9865	1.2494
6202922026	1.2332	1.5618
6202922031	1.2332	1.5618
6203221000	1.2332	1.5618
6203424006	1.1796	1.4939
6203424011	1.1796	1.4939
6203424021	1.1796	1.4939
6203424026	1.1796	1.4939
6203424031	1.1796	1.4939
6203424036	1.1796	1.4939
6204221000	1.2332	1.5618
6204421000	1.2058	1.5271
6204423010	1.2058	1.5271

IMPORT ASSESSMENT TABLE—Continued

[Raw cotton fiber]

HTS No.	Conv. fact.	Cents/kg.
6204423020	1.2058	1.5271
6204521000	1.2618	1.5981
6204623000	1.1796	1.4939
6204624006	1.1796	1.4939
6204624011	1.1796	1.4939
6204624026	1.1796	1.4939
6204624031	1.1796	1.4939
6204624036	1.1796	1.4939
6204624041	1.1796	1.4939
6205201000	1.1796	1.4939
6206301000	1.1796	1.4939
6209205040	1.1545	1.4621
6213201000	1.1187	1.4169
6216001300	0.3427	0.4340
6216001900	0.3427	0.4340
6216003300	0.5898	0.7470
6216003500	0.5898	0.7470
6216003800	1.1796	1.4939
6216004100	1.1796	1.4939
6302100005	1.1073	1.4024
6302100008	1.1073	1.4024
6302100015	1.1073	1.4024
6302213010	1.1073	1.4024
6302213020	1.1073	1.4024
6302213030	1.1073	1.4024
6302213040	1.1073	1.4024
6302213050	1.1073	1.4024
6302217010	1.1073	1.4024
6302217020	1.1073	1.4024
6302217030	1.1073	1.4024
6302217040	1.1073	1.4024
6302217050	1.1073	1.4024
6302313010	1.1073	1.4024
6302313020	1.1073	1.4024
6302313030	1.1073	1.4024
6302313040	1.1073	1.4024
6302313050	1.1073	1.4024
6302317010	1.1073	1.4024
6302317020	1.1073	1.4024
6302317030	1.1073	1.4024
6302317040	1.1073	1.4024
6302317050	1.1073	1.4024
6302600010	1.1073	1.4024
6302910015	1.1073	1.4024
6304191000	1.1073	1.4024
6505901515	1.1189	1.4170
6505901525	0.5594	0.7085
6505901540	1.1189	1.4170
6505902030	0.9412	1.1921
6505902060	0.9412	1.1921
6505902545	0.5537	0.7012
9404908020	0.9966	1.2622
9404908040	0.9966	1.2622
9404908505	0.6644	0.8415
9404909505	0.6644	0.8415
5205111000	1.0000	1.2665
5205112000	1.0000	1.2665
5205121000	1.0000	1.2665
5205122000	1.0000	1.2665
5205131000	1.0000	1.2665
5205132000	1.0000	1.2665
5205141000	1.0000	1.2665
5205142000	1.0000	1.2665
5205151000	1.0000	1.2665
5205152000	1.0000	1.2665
5205210020	1.0440	1.3222
5205210090	1.0440	1.3222
5205220020	1.0440	1.3222
5205220090	1.0440	1.3222

IMPORT ASSESSMENT TABLE—Continued

[Raw cotton fiber]

HTS No.	Conv. fact.	Cents/kg.
5205230020	1.0440	1.3222
5205230090	1.0440	1.3222
5205240020	1.0440	1.3222
5205240090	1.0440	1.3222
5205260020	1.0440	1.3222
5205260090	1.0440	1.3222
5205270020	1.0440	1.3222
5205270090	1.0440	1.3222
5205280020	1.0440	1.3222
5205280090	1.0440	1.3222
5205310000	1.0000	1.2665
5205320000	1.0000	1.2665
5205330000	1.0000	1.2665
5205340000	1.0000	1.2665
5205350000	1.0000	1.2665
5205410020	1.0440	1.3222
5205410090	1.0440	1.3222
5205420021	1.0440	1.3222
5205420029	1.0440	1.3222
5205420090	1.0440	1.3222
5205430021	1.0440	1.3222
5205430029	1.0440	1.3222
5205430090	1.0440	1.3222
5205440021	1.0440	1.3222
5205440029	1.0440	1.3222
5205440090	1.0440	1.3222
5205460021	1.0440	1.3222
5205460029	1.0440	1.3222
5205460090	1.0440	1.3222
5205470021	1.0440	1.3222
5205470029	1.0440	1.3222
5205470090	1.0440	1.3222
5205480020	1.0440	1.3222
5205480090	1.0440	1.3222
5209110020	1.0309	1.3057
5209110025	1.0309	1.3057
5209110035	1.0309	1.3057
5209110050	1.0309	1.3057
5209110090	1.0309	1.3057
5209120020	1.0309	1.3057
5209120040	1.0309	1.3057
5209190020	1.0309	1.3057
5209190040	1.0309	1.3057
5209190060	1.0309	1.3057
5209190090	1.0309	1.3057
5209210020	1.0309	1.3057
5209210025	1.0309	1.3057
5209210035	1.0309	1.3057
5209210050	1.0309	1.3057
5209210090	1.0309	1.3057
5209220020	1.0309	1.3057
5209220040	1.0309	1.3057
5209290020	1.0309	1.3057
5209290040	1.0309	1.3057
5209290060	1.0309	1.3057
5209290090	1.0309	1.3057
5209313000	1.0309	1.3057
5209316020	1.0309	1.3057
5209316025	1.0309	1.3057
5209316035	1.0309	1.3057
5209316050	1.0309	1.3057
5209316090	1.0309	1.3057
5209320020	1.0309	1.3057
5209320040	1.0309	1.3057
5209390020	1.0309	1.3057
5209390040	1.0309	1.3057
5209390060	1.0309	1.3057
5209390080	1.0309	1.3057
5209390090	1.0309	1.3057

IMPORT ASSESSMENT TABLE—Continued

[Raw cotton fiber]

HTS No.	Conv. fact.	Cents/kg.
5209413000	1.0309	1.3057
5209416020	1.0309	1.3057
5209416040	1.0309	1.3057
5209430030	1.0309	1.3057
5209430050	1.0309	1.3057
5209490020	1.0309	1.3057
5209490040	1.0309	1.3057
5209490090	1.0309	1.3057
5209513000	1.0309	1.3057
5701901010	1.0000	1.2665
5701901020	1.0000	1.2665
5702109020	0.8500	1.0765
5702505600	0.8500	1.0765
5802110000	1.0309	1.3057
5802190000	1.0309	1.3057
6203322010	1.1715	1.4837
6203322020	1.1715	1.4837
6203322030	1.1715	1.4837
6203322040	1.1715	1.4837
6203322050	1.1715	1.4837
6204322010	1.1715	1.4837
6204322020	1.1715	1.4837
6204522010	1.1988	1.5182
6204522020	1.1988	1.5182
6204522030	1.1988	1.5182
6204522040	1.1988	1.5182
6209201000	1.0967	1.3890
9404901000	0.2104	0.2665
5207100000	0.9474	1.1998
5209420020	0.9767	1.2370
5209420040	0.9767	1.2370
5209420060	0.9767	1.2370
5209420080	0.9767	1.2370
5601102000	0.9767	1.2370
5601210010	0.9767	1.2370
5601210090	0.9767	1.2370
5601220010	0.9767	1.2370
5601220090	0.9767	1.2370
5701902010	0.9474	1.1998
5701902020	0.9474	1.1998
5702392010	0.8053	1.0199
5801210000	0.9767	1.2370
5801221000	0.9767	1.2370
5801229000	0.9767	1.2370
5801230000	0.9767	1.2370
5801240000	0.9767	1.2370
5801250020	0.9767	1.2370
6001210000	0.9868	1.2498
6107110010	1.0727	1.3585
6107110020	1.0727	1.3585
6108199010	1.0611	1.3439
6108310010	1.0611	1.3439
6108310020	1.0611	1.3439
6110202005	1.1214	1.4203
6110202010	1.1214	1.4203
6110202015	1.1214	1.4203
6110202020	1.1214	1.4203
6110202025	1.1214	1.4203
6110202030	1.1214	1.4203
6110202035	1.1214	1.4203
6110202040	1.0965	1.3887
6110202045	1.0965	1.3887
6110202067	1.0965	1.3887
6110202069	1.0965	1.3887
6110202077	1.0965	1.3887
6110202079	1.0965	1.3887
6112390010	1.0727	1.3585
6115103000	0.9868	1.2498
6115190010	0.9868	1.2498

IMPORT ASSESSMENT TABLE—Continued

[Raw cotton fiber]

HTS No.	Conv. fact.	Cents/kg.
6115956000	0.9868	1.2498
6115959000	0.9868	1.2498
6116926410	1.0388	1.3156
6116926420	1.0388	1.3156
6116926440	1.0388	1.3156
6116927450	1.0388	1.3156
6116927470	1.0388	1.3156
6116928800	1.0388	1.3156
6116929400	1.0388	1.3156
6201121000	0.8981	1.1374
6201921000	0.8779	1.1119
6201921500	1.0974	1.3898
6202121000	0.8879	1.1245
6203421000	1.0616	1.3445
6203424003	1.0616	1.3445
6204621000	0.8681	1.0995
6204624003	1.0616	1.3445
6205202036	1.0616	1.3445
6205202041	1.0616	1.3445
6205202044	1.0616	1.3445
6207110000	1.0281	1.3021
6207210010	1.0502	1.3301
6207210020	1.0502	1.3301
6207210030	1.0502	1.3301
6207210040	1.0502	1.3301
6207911000	1.0852	1.3744
6207913010	1.0852	1.3744
6207913020	1.0852	1.3744
6208192000	1.0852	1.3744
6208911010	1.0852	1.3744
6208911020	1.0852	1.3744
6208913010	1.0852	1.3744
6208913020	1.0852	1.3744
6209202000	1.0390	1.3159
6211118010	1.0852	1.3744
6211118020	1.0852	1.3744
6211128010	1.0852	1.3744
6211128020	1.0852	1.3744
6211420025	1.1099	1.4056
6211420054	1.1099	1.4056
6211420056	1.1099	1.4056
6211420070	1.1099	1.4056
6211420075	1.1099	1.4056
6211420081	1.1099	1.4056
6213202000	1.0069	1.2752
6215900015	1.0281	1.3021
6302600020	0.9966	1.2622
6302600030	0.9966	1.2622
6302910005	0.9966	1.2622
6302910025	0.9966	1.2622
6302910035	0.9966	1.2622
6302910045	0.9966	1.2622
6302910050	0.9966	1.2622
6302910060	0.9966	1.2622
6304111000	0.9966	1.2622
6304190500	0.9966	1.2622
6507000000	0.3986	0.5049
5705002020	0.7682	0.9729
6109100004	1.0022	1.2692
6109100007	1.0022	1.2692
6109100011	1.0022	1.2692
6109100012	1.0022	1.2692
6109100014	1.0022	1.2692
6109100018	1.0022	1.2692
6109100023	1.0022	1.2692
6109100027	1.0022	1.2692
6109100037	1.0022	1.2692
6109100040	1.0022	1.2692
6109100045	1.0022	1.2692

IMPORT ASSESSMENT TABLE—Continued

[Raw cotton fiber]

HTS No.	Conv. fact.	Cents/kg.
6109100060	1.0022	1.2692
6109100065	1.0022	1.2692
6109100070	1.0022	1.2692
6201122010	0.8482	1.0742
6201122020	0.8482	1.0742
6202122010	1.0482	1.3275
6202122020	1.0482	1.3275
6208210010	1.0026	1.2698
6208210020	1.0026	1.2698
6208210030	1.0026	1.2698
6302402010	0.9412	1.1921
5212116010	0.8681	1.0995
5212116020	0.8681	1.0995
5212116030	0.8681	1.0995
5212116040	0.8681	1.0995
5212116050	0.8681	1.0995
5212116060	0.8681	1.0995
5212116070	0.8681	1.0995
5212116080	0.8681	1.0995
5212116090	0.8681	1.0995
5212126010	0.8681	1.0995
5212126020	0.8681	1.0995
5212126030	0.8681	1.0995
5212126040	0.8681	1.0995
5212126050	0.8681	1.0995
5212126060	0.8681	1.0995
5212126070	0.8681	1.0995
5212126080	0.8681	1.0995
5212126090	0.8681	1.0995
5212136010	0.8681	1.0995
5212136020	0.8681	1.0995
5212136030	0.8681	1.0995
5212136040	0.8681	1.0995
5212136050	0.8681	1.0995
5212136060	0.8681	1.0995
5212136070	0.8681	1.0995
5212136080	0.8681	1.0995
5212136090	0.8681	1.0995
5212146010	0.8681	1.0995
5212146020	0.8681	1.0995
5212146030	0.8681	1.0995
5212146090	0.8681	1.0995
5212156010	0.8681	1.0995
5212156020	0.8681	1.0995
5212156030	0.8681	1.0995
5212156040	0.8681	1.0995
5212156050	0.8681	1.0995
5212156060	0.8681	1.0995
5212156070	0.8681	1.0995
5212156080	0.8681	1.0995
5212156090	0.8681	1.0995
5212216010	0.8681	1.0995
5212216020	0.8681	1.0995
5212216030	0.8681	1.0995
5212216040	0.8681	1.0995
5212216050	0.8681	1.0995
5212216060	0.8681	1.0995
5212216090	0.8681	1.0995
5212226010	0.8681	1.0995
5212226020	0.8681	1.0995
5212226030	0.8681	1.0995
5212226040	0.8681	1.0995
5212226050	0.8681	1.0995
5212226060	0.8681	1.0995
5212226090	0.8681	1.0995
5212236010	0.8681	1.0995
5212236020	0.8681	1.0995
5212236030	0.8681	1.0995
5212236040	0.8681	1.0995

IMPORT ASSESSMENT TABLE—Continued

[Raw cotton fiber]

HTS No.	Conv. fact.	Cents/kg.
5212236050	0.8681	1.0995
5212236060	0.8681	1.0995
5212236090	0.8681	1.0995
5212246010	0.8681	1.0995
5212246030	0.8681	1.0995
5212246040	0.8681	1.0995
5212246090	0.8681	1.0995
5212256010	0.8681	1.0995
5212256020	0.8681	1.0995
5212256030	0.8681	1.0995
5212256040	0.8681	1.0995
5212256050	0.8681	1.0995
5212256060	0.8681	1.0995
5212256090	0.8681	1.0995
5311004010	0.8681	1.0995
5311004020	0.8681	1.0995
5601101000	0.8681	1.0995
5609001000	0.8421	1.0665
5803002000	0.8681	1.0995
5803003000	0.8681	1.0995
5804291000	0.8772	1.1110
5806101000	0.8681	1.0995
5806310000	0.8681	1.0995
5807100510	0.8681	1.0995
5807102010	0.8681	1.0995
5807900510	0.8681	1.0995
5807902010	0.8681	1.0995
5811002000	0.8681	1.0995
5901102000	0.5643	0.7147
5903101000	0.4341	0.5498
5903201000	0.4341	0.5498
5903901000	0.4341	0.5498
5906100000	0.4341	0.5498
5906911000	0.4341	0.5498
5906991000	0.4341	0.5498
5908000000	0.7813	0.9896
6001910010	0.8772	1.1110
6001910020	0.8772	1.1110
6002904000	0.7895	0.9999
6003201000	0.8772	1.1110
6003203000	0.8772	1.1110
6101200010	1.0200	1.2918
6101200020	1.0200	1.2918
6103220080	0.9747	1.2344
6105100010	0.9332	1.1819
6105100020	0.9332	1.1819
6105100030	0.9332	1.1819
6106100010	0.9332	1.1819
6106100020	0.9332	1.1819
6106100030	0.9332	1.1819
6107910090	0.9535	1.2076
6111203000	0.9535	1.2076
6111204000	0.9535	1.2076
6111205000	0.9535	1.2076
6111206010	0.9535	1.2076
6111206020	0.9535	1.2076
6111206030	0.9535	1.2076
6111206050	0.9535	1.2076
6111206070	0.9535	1.2076
6112110010	0.9535	1.2076
6112110020	0.9535	1.2076
6112110030	0.9535	1.2076
6112110040	0.9535	1.2076
6112110050	0.9535	1.2076
6112110060	0.9535	1.2076
6114200005	0.9747	1.2344
6114200010	0.9747	1.2344
6116105510	0.6464	0.8186
6116107510	0.6464	0.8186

IMPORT ASSESSMENT TABLE—Continued

[Raw cotton fiber]

HTS No.	Conv. fact.	Cents/kg.
6117106010	0.9234	1.1694
6117808500	0.9234	1.1694
6117809510	0.9234	1.1694
6201922005	0.9754	1.2354
6201922010	0.9754	1.2354
6201922051	0.9754	1.2354
6201922061	0.9754	1.2354
6202921500	0.9865	1.2494
6202922010	0.9865	1.2494
6202922020	0.9865	1.2494
6202922061	0.9865	1.2494
6202922071	0.9865	1.2494
6203191010	0.9865	1.2494
6203191020	0.9865	1.2494
6203191030	0.9865	1.2494
6203223010	0.9865	1.2494
6203223015	0.9865	1.2494
6203223020	0.9865	1.2494
6203223030	0.9865	1.2494
6203223050	0.9865	1.2494
6203223060	0.9865	1.2494
6203422010	0.9436	1.1951
6203422025	0.9436	1.1951
6203422050	0.9436	1.1951
6203422090	0.9436	1.1951
6203424016	0.9436	1.1951
6203424041	0.9436	1.1951
6203424046	0.9436	1.1951
6204120010	0.9865	1.2494
6204120020	0.9865	1.2494
6204120030	0.9865	1.2494
6204120040	0.9865	1.2494
6204223010	0.9865	1.2494
6204223030	0.9865	1.2494
6204223040	0.9865	1.2494
6204223050	0.9865	1.2494
6204223060	0.9865	1.2494
6204223065	0.9865	1.2494
6204223070	0.9865	1.2494
6204322030	0.9865	1.2494
6204322040	0.9865	1.2494
6204522070	1.0095	1.2785
6204522080	1.0095	1.2785
6204622010	0.9436	1.1951
6204622025	0.9436	1.1951
6204622050	0.9436	1.1951
6204624021	0.9436	1.1951
6204624046	0.9436	1.1951
6204624051	0.9436	1.1951
6204624056	0.9335	1.1823
6204624061	0.9335	1.1823
6204624066	0.9335	1.1823
6205202003	0.9436	1.1951
6205202016	0.9436	1.1951
6205202021	0.9436	1.1951
6205202026	0.9436	1.1951
6205202031	0.9436	1.1951
6205202047	0.9436	1.1951
6205202051	0.9436	1.1951
6205202056	0.9436	1.1951
6205202061	0.9436	1.1951
6205202066	0.9436	1.1951
6205202071	0.9436	1.1951
6205202076	0.9436	1.1951
6206303003	0.9436	1.1951
6206303011	0.9436	1.1951
6206303021	0.9436	1.1951
6206303031	0.9436	1.1951
6206303041	0.9436	1.1951

IMPORT ASSESSMENT TABLE—Continued

[Raw cotton fiber]

HTS No.	Conv. fact.	Cents/kg.
6206303051	0.9436	1.1951
6206303061	0.9436	1.1951
6209203000	0.9236	1.1697
6209205030	0.9236	1.1697
6209205035	0.9236	1.1697
6209205045	0.9236	1.1697
6209205050	0.9236	1.1697
6211200410	0.7717	0.9773
6211200430	0.7717	0.9773
6211320010	0.9865	1.2494
6211320015	0.9865	1.2494
6211320025	0.9865	1.2494
6211420010	0.9865	1.2494
6211420020	0.9865	1.2494
6211420040	0.9865	1.2494
6211420060	0.9865	1.2494
6212105010	0.9138	1.1574
6212109010	0.9138	1.1574
6216001720	0.6397	0.8102
6216002410	0.6605	0.8366
6216002910	0.6605	0.8366
6217109510	0.9646	1.2217
6217909003	0.9646	1.2217
6217909025	0.9646	1.2217
6217909050	0.9646	1.2217
6217909075	0.9646	1.2217
6303191100	0.8859	1.1220
6304910020	0.8859	1.1220
6304920000	0.8859	1.1220
6002404000	0.7401	0.9374
6102200010	0.9562	1.2111
6102200020	0.9562	1.2111
6103220010	0.9137	1.1573
6112490010	0.8939	1.1321
6203424051	0.8752	1.1084
6203424056	0.8752	1.1084
6203424061	0.8752	1.1084
6204423030	0.9043	1.1453
6204423040	0.9043	1.1453
6204423050	0.9043	1.1453
6204423060	0.9043	1.1453
6211207810	0.9249	1.1714
6211320030	0.9249	1.1714
6211320040	0.9249	1.1714
6211320050	0.9249	1.1714
6211320060	0.9249	1.1714
6211320070	0.9249	1.1714
6211320075	0.9249	1.1714
6211320081	0.9249	1.1714
6214900010	0.8567	1.0850
6301300010	0.8305	1.0518
6301300020	0.8305	1.0518
6302512000	0.8305	1.0518
5206110000	0.7368	0.9332
5206120000	0.7368	0.9332
5206130000	0.7368	0.9332
5206140000	0.7368	0.9332
5206150000	0.7368	0.9332
5206210000	0.7692	0.9742
5206220000	0.7692	0.9742
5206230000	0.7692	0.9742
5206240000	0.7692	0.9742
5206250000	0.7692	0.9742
5206310000	0.7368	0.9332
5206320000	0.7368	0.9332
5206330000	0.7368	0.9332
5206340000	0.7368	0.9332
5206350000	0.7368	0.9332
5206410000	0.7692	0.9742

IMPORT ASSESSMENT TABLE—Continued

[Raw cotton fiber]

HTS No.	Conv. fact.	Cents/kg.
5206420000	0.7692	0.9742
5206430000	0.7692	0.9742
5206440000	0.7692	0.9742
5206450000	0.7692	0.9742
5801260010	0.7596	0.9621
5801260020	0.7596	0.9621
5810910010	0.7596	0.9621
5810910020	0.7596	0.9621
5909001000	0.6837	0.8659
5910001010	0.3798	0.4810
5910001020	0.3798	0.4810
5910001030	0.3798	0.4810
5910001060	0.3798	0.4810
5910001070	0.3798	0.4810
5910001090	0.6837	0.8659
5910009000	0.5697	0.7216
6006219020	0.7675	0.9721
6006219080	0.7675	0.9721
6006229020	0.7675	0.9721
6006229080	0.7675	0.9721
6006239020	0.7675	0.9721
6006239080	0.7675	0.9721
6006249020	0.7675	0.9721
6006249080	0.7675	0.9721
6103106010	0.8528	1.0801
6103106015	0.8528	1.0801
6103106030	0.8528	1.0801
6103220070	0.8528	1.0801
6103320000	0.8722	1.1047
6103421020	0.8343	1.0566
6103421035	0.8343	1.0566
6103421040	0.8343	1.0566
6103421050	0.8343	1.0566
6103421065	0.8343	1.0566
6103421070	0.8343	1.0566
6103422010	0.8343	1.0566
6103422015	0.8343	1.0566
6103422025	0.8343	1.0566
6104196010	0.8722	1.1047
6104196020	0.8722	1.1047
6104196030	0.8722	1.1047
6104196040	0.8722	1.1047
6104220010	0.8528	1.0801
6104220030	0.8528	1.0801
6104220040	0.8528	1.0801
6104220050	0.8528	1.0801
6104220060	0.8528	1.0801
6104220090	0.8528	1.0801
6104320000	0.8722	1.1047
6104420010	0.8528	1.0801
6104420020	0.8528	1.0801
6104520010	0.8822	1.1173
6104520020	0.8822	1.1173
6104621010	0.7509	0.9510
6104621020	0.8343	1.0566
6104621030	0.8343	1.0566
6104622011	0.8343	1.0566
6104622021	0.8343	1.0566
6104622028	0.8343	1.0566
6104622030	0.8343	1.0566
6104622050	0.8343	1.0566
6104622060	0.8343	1.0566
6104632006	0.8343	1.0566
6104632011	0.8343	1.0566
6104632021	0.8343	1.0566
6107210010	0.8343	1.0566
6112202010	0.8722	1.1047
6113009015	0.3489	0.4419
6113009020	0.3489	0.4419

IMPORT ASSESSMENT TABLE—Continued

[Raw cotton fiber]

HTS No.	Conv. fact.	Cents/kg.
6113009038	0.3489	0.4419
6113009042	0.3489	0.4419
6113009055	0.3489	0.4419
6113009060	0.3489	0.4419
6113009074	0.3489	0.4419
6113009082	0.3489	0.4419
6114200015	0.8528	1.0801
6114200020	0.8528	1.0801
6114200035	0.8528	1.0801
6114200040	0.8528	1.0801
6114200044	0.8528	1.0801
6114200046	0.8528	1.0801
6114200048	0.8528	1.0801
6114200052	0.8528	1.0801
6114200055	0.8528	1.0801
6114200060	0.8528	1.0801
6115200030	0.7675	0.9721
6115209030	0.7675	0.9721
6115309030	0.7675	0.9721
6116920500	0.8079	1.0233
6116920800	0.8079	1.0233
6211420030	0.8632	1.0933
6216002110	0.5780	0.7320
6302215010	0.7751	0.9817
6302215020	0.7751	0.9817
6302215030	0.7751	0.9817
6302215040	0.7751	0.9817
6302215050	0.7751	0.9817
6302219010	0.7751	0.9817
6302219020	0.7751	0.9817
6302219030	0.7751	0.9817
6302219040	0.7751	0.9817
6302219050	0.7751	0.9817
6302315010	0.7751	0.9817
6302315020	0.7751	0.9817
6302315030	0.7751	0.9817
6302315040	0.7751	0.9817
6302315050	0.7751	0.9817
6302319010	0.7751	0.9817
6302319020	0.7751	0.9817
6302319030	0.7751	0.9817
6302319040	0.7751	0.9817
6302319050	0.7751	0.9817
6302514000	0.7751	0.9817
5211420020	0.7054	0.8934
5211420040	0.7054	0.8934
5212246020	0.7054	0.8934
6005210000	0.7127	0.9027
6005220000	0.7127	0.9027
6005230000	0.7127	0.9027
6005240000	0.7127	0.9027
6103220020	0.7919	1.0030
6103220030	0.7919	1.0030
6103220040	0.7919	1.0030
6103220050	0.7919	1.0030
6201122050	0.6486	0.8215
6201122060	0.6486	0.8215
6202122050	0.8016	1.0152
6202122060	0.8016	1.0152
6211201510	0.7615	0.9644
6211201530	0.7615	0.9644
6211201540	0.7615	0.9644
6211201550	0.7615	0.9644
6211201560	0.7615	0.9644
6211202810	0.8016	1.0152
6211203810	0.8016	1.0152
6211204815	0.8016	1.0152
6211205810	0.8016	1.0152
6211206810	0.8016	1.0152

IMPORT ASSESSMENT TABLE—Continued

[Raw cotton fiber]

HTS No.	Conv. fact.	Cents/kg.
6211320003	0.6412	0.8121
6211320007	0.8016	1.0152
6211420003	0.6412	0.8121
6211420007	0.8016	1.0152
5204190000	0.6316	0.7999
5207900000	0.6316	0.7999
5210114020	0.6511	0.8246
5210114040	0.6511	0.8246
5210114090	0.6511	0.8246
5210116020	0.6511	0.8246
5210116040	0.6511	0.8246
5210116060	0.6511	0.8246
5210116090	0.6511	0.8246
5210118020	0.6511	0.8246
5210118090	0.6511	0.8246
5210191000	0.6511	0.8246
5210192020	0.6511	0.8246
5210192090	0.6511	0.8246
5210194020	0.6511	0.8246
5210194090	0.6511	0.8246
5210196020	0.6511	0.8246
5210196090	0.6511	0.8246
5210198020	0.6511	0.8246
5210198090	0.6511	0.8246
5210214020	0.6511	0.8246
5210214040	0.6511	0.8246
5210214090	0.6511	0.8246
5210216020	0.6511	0.8246
5210216040	0.6511	0.8246
5210216060	0.6511	0.8246
5210216090	0.6511	0.8246
5210218020	0.6511	0.8246
5210218090	0.6511	0.8246
5210291000	0.6511	0.8246
5210292020	0.6511	0.8246
5210292090	0.6511	0.8246
5210294020	0.6511	0.8246
5210294090	0.6511	0.8246
5210296020	0.6511	0.8246
5210296090	0.6511	0.8246
5210298020	0.6511	0.8246
5210298090	0.6511	0.8246
5210314020	0.6511	0.8246
5210314040	0.6511	0.8246
5210314090	0.6511	0.8246
5210316020	0.6511	0.8246
5210316040	0.6511	0.8246
5210316060	0.6511	0.8246
5210316090	0.6511	0.8246
5210318020	0.6511	0.8246
5210318090	0.6511	0.8246
5210320000	0.6511	0.8246
5210392020	0.6511	0.8246
5210392090	0.6511	0.8246
5210394020	0.6511	0.8246
5210394090	0.6511	0.8246
5210396020	0.6511	0.8246
5210396090	0.6511	0.8246
5210398020	0.6511	0.8246
5210398090	0.6511	0.8246
5210414000	0.6511	0.8246
5210416000	0.6511	0.8246
5210418000	0.6511	0.8246
5210491000	0.6511	0.8246
5210492000	0.6511	0.8246
5210494010	0.6511	0.8246
5210494020	0.6511	0.8246
5210494090	0.6511	0.8246
5210496010	0.6511	0.8246

IMPORT ASSESSMENT TABLE—Continued

[Raw cotton fiber]

HTS No.	Conv. fact.	Cents/kg.
5210496020	0.6511	0.8246
5210496090	0.6511	0.8246
5210498020	0.6511	0.8246
5210498090	0.6511	0.8246
5210514020	0.6511	0.8246
5210514040	0.6511	0.8246
5210514090	0.6511	0.8246
5210516020	0.6511	0.8246
5210516040	0.6511	0.8246
5210516060	0.6511	0.8246
5210516090	0.6511	0.8246
5210518020	0.6511	0.8246
5210518090	0.6511	0.8246
5210591000	0.6511	0.8246
5210592020	0.6511	0.8246
5210592090	0.6511	0.8246
5210594020	0.6511	0.8246
5210594090	0.6511	0.8246
5210596020	0.6511	0.8246
5210596090	0.6511	0.8246
5210598020	0.6511	0.8246
5210598090	0.6511	0.8246
5211110020	0.6511	0.8246
5211110025	0.6511	0.8246
5211110035	0.6511	0.8246
5211110050	0.6511	0.8246
5211110090	0.6511	0.8246
5211120020	0.6511	0.8246
5211120040	0.6511	0.8246
5211190020	0.6511	0.8246
5211190040	0.6511	0.8246
5211190060	0.6511	0.8246
5211190090	0.6511	0.8246
5211202120	0.6511	0.8246
5211202125	0.6511	0.8246
5211202135	0.6511	0.8246
5211202150	0.6511	0.8246
5211202190	0.6511	0.8246
5211202220	0.6511	0.8246
5211202240	0.6511	0.8246
5211202920	0.6511	0.8246
5211202940	0.6511	0.8246
5211202960	0.6511	0.8246
5211202990	0.6511	0.8246
5211310020	0.6511	0.8246
5211310025	0.6511	0.8246
5211310035	0.6511	0.8246
5211310050	0.6511	0.8246
5211310090	0.6511	0.8246
5211320020	0.6511	0.8246
5211320040	0.6511	0.8246
5211390020	0.6511	0.8246
5211390040	0.6511	0.8246
5211390060	0.6511	0.8246
5211390090	0.6511	0.8246
5211410020	0.6511	0.8246
5211410040	0.6511	0.8246
5211420060	0.6511	0.8246
5211420080	0.6511	0.8246
5211430030	0.6511	0.8246
5211430050	0.6511	0.8246
5211490020	0.6511	0.8246
5211490090	0.6511	0.8246
5211510020	0.6511	0.8246
5211510030	0.6511	0.8246
5211510050	0.6511	0.8246
5211510090	0.6511	0.8246
5211520020	0.6511	0.8246
5211520040	0.6511	0.8246

IMPORT ASSESSMENT TABLE—Continued

[Raw cotton fiber]

HTS No.	Conv. fact.	Cents/kg.
5211590015	0.6511	0.8246
5211590020	0.6511	0.8246
5211590025	0.6511	0.8246
5211590040	0.6511	0.8246
5211590060	0.6511	0.8246
5211590090	0.6511	0.8246
5608902300	0.6316	0.7999
5608902700	0.6316	0.7999
6103398010	0.7476	0.9468
6104220080	0.7310	0.9258
6104622006	0.7151	0.9057
6104622016	0.7151	0.9057
6104622026	0.7151	0.9057
6104632016	0.7151	0.9057
6104632050	0.7151	0.9057
6107210020	0.7151	0.9057
6110201010	0.7476	0.9468
6110201020	0.7476	0.9468
6110201022	0.7476	0.9468
6110201024	0.7476	0.9468
6110201026	0.7476	0.9468
6110201029	0.7476	0.9468
6110201031	0.7476	0.9468
6110201033	0.7476	0.9468
6203422005	0.7077	0.8963
6204622005	0.7077	0.8963
6212200010	0.6854	0.8680
6212300010	0.6854	0.8680
5212111010	0.5845	0.7403
5212111020	0.6231	0.7891
5212121010	0.5845	0.7403
5212121020	0.6231	0.7891
5212131010	0.5845	0.7403
5212131020	0.6231	0.7891
5212141010	0.5845	0.7403
5212141020	0.6231	0.7891
5212151010	0.5845	0.7403
5212151020	0.6231	0.7891
5212211010	0.5845	0.7403
5212211020	0.6231	0.7891
5212221010	0.5845	0.7403
5212221020	0.6231	0.7891
5212231010	0.5845	0.7403
5212231020	0.6231	0.7891
5212241010	0.5845	0.7403
5212241020	0.6231	0.7891
5212251010	0.5845	0.7403
5212251020	0.6231	0.7891
6116104810	0.4444	0.5628
6203321000	0.6782	0.8590
6204321000	0.6782	0.8590
6204422000	0.6632	0.8399
6206302000	0.6488	0.8216
6211201520	0.6443	0.8160
6303910010	0.6090	0.7713
6303910020	0.6090	0.7713
5309213005	0.5426	0.6872
5309213010	0.5426	0.6872
5309213015	0.5426	0.6872
5309213020	0.5426	0.6872
5309293005	0.5426	0.6872
5309293010	0.5426	0.6872
5309293015	0.5426	0.6872
5309293020	0.5426	0.6872
5311003005	0.5426	0.6872
5311003010	0.5426	0.6872
5311003015	0.5426	0.6872
5311003020	0.5426	0.6872
5407810010	0.5426	0.6872

IMPORT ASSESSMENT TABLE—Continued

[Raw cotton fiber]

HTS No.	Conv. fact.	Cents/kg.
5407810020	0.5426	0.6872
5407810030	0.5426	0.6872
5407810040	0.5426	0.6872
5407810090	0.5426	0.6872
5407820010	0.5426	0.6872
5407820020	0.5426	0.6872
5407820030	0.5426	0.6872
5407820040	0.5426	0.6872
5407820090	0.5426	0.6872
5407830010	0.5426	0.6872
5407830020	0.5426	0.6872
5407830030	0.5426	0.6872
5407830040	0.5426	0.6872
5407830090	0.5426	0.6872
5407840010	0.5426	0.6872
5407840020	0.5426	0.6872
5407840030	0.5426	0.6872
5407840040	0.5426	0.6872
5407840090	0.5426	0.6872
5509620000	0.5263	0.6666
5509920000	0.5263	0.6666
5603143000	0.2713	0.3436
5604100000	0.2632	0.3333
5605009000	0.1579	0.2000
5909002000	0.4883	0.6185
5911201000	0.4341	0.5498
5911310010	0.4341	0.5498
5911310020	0.4341	0.5498
5911310030	0.4341	0.5498
5911310080	0.4341	0.5498
5911320010	0.4341	0.5498
5911320020	0.4341	0.5498
5911320030	0.4341	0.5498
5911320080	0.4341	0.5498
5911400000	0.5426	0.6872
5911900000	0.5426	0.6872
6104292049	0.6092	0.7715
6113001005	0.1246	0.1578
6113001010	0.1246	0.1578
6113001012	0.1246	0.1578
6210207000	0.1809	0.2291
6210309020	0.4220	0.5345
6210405020	0.4316	0.5466
6210405040	0.4316	0.5466
6210405050	0.4316	0.5466
6210507000	0.4316	0.5466
6211128030	0.6029	0.7635
6302221010	0.5537	0.7012
6302221030	0.5537	0.7012
6302321010	0.5537	0.7012
6302321030	0.5537	0.7012
6302322010	0.5537	0.7012
6302322030	0.5537	0.7012
6302511000	0.5537	0.7012
6302513000	0.5537	0.7012
6302593020	0.5537	0.7012
6101909010	0.5737	0.7266
6102909005	0.5737	0.7266
6103109010	0.5482	0.6944
6103109020	0.5482	0.6944
6103109030	0.5482	0.6944
6103292058	0.5482	0.6944
6103498010	0.5482	0.6944
6103498034	0.5482	0.6944
6104198010	0.5607	0.7101
6104198020	0.5607	0.7101
6104198030	0.5607	0.7101
6104198040	0.5607	0.7101
6104292010	0.5482	0.6944

IMPORT ASSESSMENT TABLE—Continued

[Raw cotton fiber]

HTS No.	Conv. fact.	Cents/kg.
6104292022	0.5482	0.6944
6104292034	0.5482	0.6944
6104292065	0.5482	0.6944
6104292081	0.5482	0.6944
6104392010	0.5607	0.7101
6104499010	0.5482	0.6944
6104598010	0.5672	0.7183
6104698010	0.5482	0.6944
6104698022	0.5482	0.6944
6105908010	0.5249	0.6648
6106902510	0.5249	0.6648
6106903010	0.5249	0.6648
6110909010	0.5607	0.7101
6110909026	0.5607	0.7101
6110909044	0.5607	0.7101
6110909046	0.5607	0.7101
6110909067	0.5607	0.7101
6110909069	0.5607	0.7101
6110909071	0.5607	0.7101
6110909073	0.5607	0.7101
6114909045	0.5482	0.6944
6201199010	0.5613	0.7109
6201999010	0.5487	0.6949
6202199010	0.5678	0.7192
6202999011	0.5549	0.7028
6203199010	0.5549	0.7028
6203199020	0.5549	0.7028
6203199030	0.5549	0.7028
6203399010	0.5549	0.7028
6203498020	0.5308	0.6723
6204198010	0.5549	0.7028
6204198020	0.5549	0.7028
6204198030	0.5549	0.7028
6204198040	0.5549	0.7028
6204294010	0.5549	0.7028
6204294022	0.5549	0.7028
6204294034	0.5549	0.7028
6204294070	0.5549	0.7028
6204294082	0.5549	0.7028
6204398010	0.5549	0.7028
6204495010	0.5549	0.7028
6204594010	0.5678	0.7192
6204696010	0.5308	0.6723
6204699010	0.5308	0.6723
6205903010	0.5308	0.6723
6205904010	0.5308	0.6723
6206100010	0.5308	0.6723
6206900010	0.5308	0.6723
6212900090	0.4112	0.5208
5514110020	0.4341	0.5498
5514110030	0.4341	0.5498
5514110050	0.4341	0.5498
5514110090	0.4341	0.5498
5514120020	0.4341	0.5498
5514120040	0.4341	0.5498
5514191020	0.4341	0.5498
5514191040	0.4341	0.5498
5514191090	0.4341	0.5498
5514199010	0.4341	0.5498
5514199020	0.4341	0.5498
5514199030	0.4341	0.5498
5514199040	0.4341	0.5498
5514199090	0.4341	0.5498
5514210020	0.4341	0.5498
5514210030	0.4341	0.5498
5514210050	0.4341	0.5498
5514210090	0.4341	0.5498
5514220020	0.4341	0.5498
5514220040	0.4341	0.5498

IMPORT ASSESSMENT TABLE—Continued

[Raw cotton fiber]

HTS No.	Conv. fact.	Cents/kg.
5514230020	0.4341	0.5498
5514230040	0.4341	0.5498
5514230090	0.4341	0.5498
5514290010	0.4341	0.5498
5514290020	0.4341	0.5498
5514290030	0.4341	0.5498
5514290040	0.4341	0.5498
5514290090	0.4341	0.5498
5514303100	0.4341	0.5498
5514303210	0.4341	0.5498
5514303215	0.4341	0.5498
5514303280	0.4341	0.5498
5514303310	0.4341	0.5498
5514303390	0.4341	0.5498
5514303910	0.4341	0.5498
5514303920	0.4341	0.5498
5514303990	0.4341	0.5498
5514410020	0.4341	0.5498
5514410030	0.4341	0.5498
5514410050	0.4341	0.5498
5514410090	0.4341	0.5498
5514420020	0.4341	0.5498
5514420040	0.4341	0.5498
5514430020	0.4341	0.5498
5514430040	0.4341	0.5498
5514430090	0.4341	0.5498
5514490010	0.4341	0.5498
5514490020	0.4341	0.5498
5514490030	0.4341	0.5498
5514490040	0.4341	0.5498
5514490090	0.4341	0.5498
5602109090	0.4341	0.5498
5602290000	0.4341	0.5498
5604909000	0.2105	0.2666
5606000010	0.1263	0.1600
5606000090	0.1263	0.1600
5703900000	0.3615	0.4579
5802300030	0.4341	0.5498
5804101000	0.4341	0.5498
5808900010	0.4341	0.5498
6101909030	0.5100	0.6459
6104292077	0.4873	0.6172
6104292079	0.4873	0.6172
6106202020	0.4666	0.5909
6107120010	0.4767	0.6038
6107120020	0.4767	0.6038
6115100500	0.4386	0.5555
6116999510	0.4617	0.5847
6204431000	0.4823	0.6108
6204632000	0.4718	0.5976
6207199030	0.4569	0.5787
6210509050	0.1480	0.1874
6210509060	0.1480	0.1874
6210509070	0.1480	0.1874
6210509090	0.1480	0.1874
6211200810	0.3858	0.4887
6211200820	0.3858	0.4887
6213900700	0.4475	0.5668
6213901000	0.4475	0.5668
6302931000	0.4429	0.5610
6302932000	0.4429	0.5610
9404909570	0.2658	0.3366
5510300000	0.3684	0.4666
5516410010	0.3798	0.4810
5516410022	0.3798	0.4810
5516410027	0.3798	0.4810
5516410030	0.3798	0.4810
5516410040	0.3798	0.4810
5516410050	0.3798	0.4810

IMPORT ASSESSMENT TABLE—Continued

[Raw cotton fiber]

HTS No.	Conv. fact.	Cents/kg.
5516410060	0.3798	0.4810
5516410070	0.3798	0.4810
5516410090	0.3798	0.4810
5516420010	0.3798	0.4810
5516420022	0.3798	0.4810
5516420027	0.3798	0.4810
5516420030	0.3798	0.4810
5516420040	0.3798	0.4810
5516420050	0.3798	0.4810
5516420060	0.3798	0.4810
5516420070	0.3798	0.4810
5516420090	0.3798	0.4810
5516430015	0.3798	0.4810
5516430020	0.3798	0.4810
5516430035	0.3798	0.4810
5516430080	0.3798	0.4810
5516440010	0.3798	0.4810
5516440022	0.3798	0.4810
5516440027	0.3798	0.4810
5516440030	0.3798	0.4810
5516440040	0.3798	0.4810
5516440050	0.3798	0.4810
5516440060	0.3798	0.4810
5516440070	0.3798	0.4810
5516440090	0.3798	0.4810
6102909015	0.4462	0.5652
6203432500	0.4128	0.5229
6203491500	0.4128	0.5229
6204442000	0.4316	0.5466
6204531000	0.4416	0.5593
6204591000	0.4416	0.5593
6205301000	0.4128	0.5229
6206401000	0.4128	0.5229
6211201555	0.4100	0.5193
6302221020	0.3876	0.4909
6302221040	0.3876	0.4909
6302221050	0.3876	0.4909
6302221060	0.3876	0.4909
6302222010	0.3876	0.4909
6302222020	0.3876	0.4909
6302222030	0.3876	0.4909
6302321020	0.3876	0.4909
6302321040	0.3876	0.4909
6302321050	0.3876	0.4909
6302321060	0.3876	0.4909
6302322020	0.3876	0.4909
6302322040	0.3876	0.4909
6302322050	0.3876	0.4909
6302322060	0.3876	0.4909
6304191500	0.3876	0.4909
6304192000	0.3876	0.4909
5513110020	0.3581	0.4535
5513110040	0.3581	0.4535
5513110060	0.3581	0.4535
5513110090	0.3581	0.4535
5513120000	0.3581	0.4535
5513130020	0.3581	0.4535
5513130040	0.3581	0.4535
5513130090	0.3581	0.4535
5513190010	0.3581	0.4535
5513190020	0.3581	0.4535
5513190030	0.3581	0.4535
5513190040	0.3581	0.4535
5513190050	0.3581	0.4535
5513190060	0.3581	0.4535
5513190090	0.3581	0.4535
5513210020	0.3581	0.4535
5513210040	0.3581	0.4535
5513210060	0.3581	0.4535

IMPORT ASSESSMENT TABLE—Continued

[Raw cotton fiber]

HTS No.	Conv. fact.	Cents/kg.
5513210090	0.3581	0.4535
5513230121	0.3581	0.4535
5513230141	0.3581	0.4535
5513230191	0.3581	0.4535
5513290010	0.3581	0.4535
5513290020	0.3581	0.4535
5513290030	0.3581	0.4535
5513290040	0.3581	0.4535
5513290050	0.3581	0.4535
5513290060	0.3581	0.4535
5513290090	0.3581	0.4535
5513310000	0.3581	0.4535
5513390010	0.3581	0.4535
5513390011	0.3581	0.4535
5513390015	0.3581	0.4535
5513390090	0.3581	0.4535
5513390091	0.3581	0.4535
5513410020	0.3581	0.4535
5513410040	0.3581	0.4535
5513410060	0.3581	0.4535
5513410090	0.3581	0.4535
5513491000	0.3581	0.4535
5513492020	0.3581	0.4535
5513492040	0.3581	0.4535
5513492090	0.3581	0.4535
5513499010	0.3581	0.4535
5513499020	0.3581	0.4535
5513499030	0.3581	0.4535
5513499040	0.3581	0.4535
5513499050	0.3581	0.4535
5513499060	0.3581	0.4535
5513499090	0.3581	0.4535
5509530030	0.3158	0.3999
5509530060	0.3158	0.3999
5511200000	0.3158	0.3999
5601300000	0.3256	0.4123
5602909000	0.3256	0.4123
5603941090	0.3256	0.4123
5603943000	0.1628	0.2062
5603949010	0.0326	0.0412
5608903000	0.3158	0.3999
5802200090	0.3256	0.4123
5803005000	0.3256	0.4123
5804300020	0.3256	0.4123
5810100000	0.3256	0.4123
5911900040	0.3158	0.3999
6004100010	0.2961	0.3750
6004100025	0.2961	0.3750
6004100085	0.2961	0.3750
6004902010	0.2961	0.3750
6004902025	0.2961	0.3750
6004902085	0.2961	0.3750
6004909000	0.2961	0.3750
6006310020	0.3289	0.4166
6006310040	0.3289	0.4166
6006310060	0.3289	0.4166
6006310080	0.3289	0.4166
6006320020	0.3289	0.4166
6006320040	0.3289	0.4166
6006320060	0.3289	0.4166
6006320080	0.3289	0.4166
6006330020	0.3289	0.4166
6006330040	0.3289	0.4166
6006330060	0.3289	0.4166
6006330080	0.3289	0.4166
6006340020	0.3289	0.4166
6006340040	0.3289	0.4166
6006340060	0.3289	0.4166
6006340080	0.3289	0.4166

IMPORT ASSESSMENT TABLE—Continued

[Raw cotton fiber]

HTS No.	Conv. fact.	Cents/kg.
6006410025	0.3289	0.4166
6006410085	0.3289	0.4166
6006420025	0.3289	0.4166
6006420085	0.3289	0.4166
6006430025	0.3289	0.4166
6006430085	0.3289	0.4166
6006440025	0.3289	0.4166
6006440085	0.3289	0.4166
6103230075	0.3655	0.4629
6103292062	0.3655	0.4629
6103398030	0.3738	0.4734
6103411010	0.3576	0.4528
6103411020	0.3576	0.4528
6103412000	0.3576	0.4528
6103498014	0.3655	0.4629
6103498038	0.3655	0.4629
6104198060	0.3738	0.4734
6104292014	0.3655	0.4629
6104292038	0.3655	0.4629
6104292055	0.3655	0.4629
6104292069	0.3655	0.4629
6104292078	0.3655	0.4629
6104292085	0.3655	0.4629
6104392030	0.3738	0.4734
6104499030	0.3655	0.4629
6104598030	0.3781	0.4789
6104632026	0.3576	0.4528
6104632028	0.3576	0.4528
6104632030	0.3576	0.4528
6104632060	0.3576	0.4528
6104691000	0.3655	0.4629
6104692030	0.3655	0.4629
6104692060	0.3655	0.4629
6104698014	0.3655	0.4629
6104698026	0.3655	0.4629
6105908030	0.3499	0.4432
6106902530	0.3499	0.4432
6106903030	0.3499	0.4432
6107220010	0.3576	0.4528
6107991030	0.3576	0.4528
6107991040	0.3576	0.4528
6107991090	0.3576	0.4528
6108299000	0.3537	0.4480
6108398000	0.3537	0.4480
6108999000	0.3537	0.4480
6109908010	0.3499	0.4432
6110909014	0.3738	0.4734
6110909030	0.3738	0.4734
6110909052	0.3738	0.4734
6110909054	0.3738	0.4734
6110909079	0.3738	0.4734
6110909080	0.3738	0.4734
6110909081	0.3738	0.4734
6110909082	0.3738	0.4734
6112202020	0.3738	0.4734
6114200042	0.3655	0.4629
6114909055	0.3655	0.4629
6114909070	0.3655	0.4629
6116999530	0.3463	0.4385
6117809540	0.3463	0.4385
6201199030	0.3742	0.4739
6201199060	0.3742	0.4739
6201931000	0.2926	0.3706
6201999030	0.3658	0.4633
6202199030	0.3786	0.4794
6202931000	0.2960	0.3748
6202999031	0.3700	0.4685
6203199050	0.3700	0.4685
6203399030	0.3700	0.4685

IMPORT ASSESSMENT TABLE—Continued

[Raw cotton fiber]

HTS No.	Conv. fact.	Cents/kg.
6203498030	0.3539	0.4482
6204294014	0.3700	0.4685
6204294086	0.3700	0.4685
6204696070	0.3539	0.4482
6204699050	0.3539	0.4482
6207199010	0.3427	0.4340
6207220000	0.3501	0.4434
6210407000	0.1110	0.1406
6210409025	0.1110	0.1406
6210409033	0.1110	0.1406
6210409045	0.1110	0.1406
6210409060	0.1110	0.1406
6211201535	0.3515	0.4451
6211330025	0.3700	0.4685
6211330030	0.3700	0.4685
6211330035	0.3700	0.4685
6211330040	0.3700	0.4685
6211330054	0.3700	0.4685
6211330058	0.3700	0.4685
6211330061	0.3700	0.4685
6211430076	0.3700	0.4685
6211430078	0.3700	0.4685
6213902000	0.3356	0.4251
6216002120	0.2477	0.3137
5007106010	0.2713	0.3436
5007106020	0.2713	0.3436
5007906010	0.2713	0.3436
5007906020	0.2713	0.3436
5309214010	0.2713	0.3436
5309214090	0.2713	0.3436
5309294010	0.2713	0.3436
5309294090	0.2713	0.3436
5806200010	0.2577	0.3264
5806200090	0.2577	0.3264
6101301000	0.2072	0.2624
6104292026	0.3046	0.3858
6105202010	0.2916	0.3693
6105202020	0.2916	0.3693
6105202030	0.2916	0.3693
6106202010	0.2916	0.3693
6106202030	0.2916	0.3693
6106902550	0.2916	0.3693
6106903040	0.2916	0.3693
6109901007	0.2948	0.3733
6109901009	0.2948	0.3733
6109901013	0.2948	0.3733
6109901025	0.2948	0.3733
6109901047	0.2948	0.3733
6109901049	0.2948	0.3733
6109901050	0.2948	0.3733
6109901060	0.2948	0.3733
6109901065	0.2948	0.3733
6109901070	0.2948	0.3733
6109901075	0.2948	0.3733
6109901090	0.2948	0.3733
6201134030	0.2495	0.3160
6201134040	0.2495	0.3160
6202134020	0.3155	0.3995
6202134030	0.3155	0.3995
6203230050	0.3083	0.3905
6203230055	0.3083	0.3905
6203230060	0.3083	0.3905
6203230070	0.3083	0.3905
6203230080	0.3083	0.3905
6203230090	0.3083	0.3905
6203292010	0.3083	0.3905
6203292020	0.3083	0.3905
6203292030	0.3083	0.3905
6203292035	0.3083	0.3905

IMPORT ASSESSMENT TABLE—Continued

[Raw cotton fiber]

HTS No.	Conv. fact.	Cents/kg.
6203292050	0.3083	0.3905
6203292060	0.3083	0.3905
6204198060	0.3083	0.3905
6204230030	0.3083	0.3905
6204230035	0.3083	0.3905
6204230040	0.3083	0.3905
6204230045	0.3083	0.3905
6204230050	0.3083	0.3905
6204230055	0.3083	0.3905
6204230060	0.3083	0.3905
6204292010	0.3083	0.3905
6204292015	0.3083	0.3905
6204292020	0.3083	0.3905
6204292025	0.3083	0.3905
6204292030	0.3083	0.3905
6204292040	0.3083	0.3905
6204292050	0.3083	0.3905
6204294026	0.3083	0.3905
6204294038	0.3083	0.3905
6204294074	0.3083	0.3905
6204398030	0.3083	0.3905
6205302010	0.2949	0.3735
6205302020	0.2949	0.3735
6205302030	0.2949	0.3735
6205302040	0.2949	0.3735
6205302050	0.2949	0.3735
6205302055	0.2949	0.3735
6205302060	0.2949	0.3735
6205302070	0.2949	0.3735
6205302075	0.2949	0.3735
6205302080	0.2949	0.3735
6206403010	0.2949	0.3735
6206403020	0.2949	0.3735
6206403025	0.2949	0.3735
6206403030	0.2949	0.3735
6206403040	0.2949	0.3735
6206403050	0.2949	0.3735
6209301000	0.2917	0.3695
6209302000	0.2917	0.3695
6209901000	0.2917	0.3695
6209902000	0.2917	0.3695
6209903010	0.2917	0.3695
6209903015	0.2917	0.3695
6209903020	0.2917	0.3695
6209903030	0.2917	0.3695
6209903040	0.2917	0.3695
6211201525	0.2929	0.3709
6211201545	0.2929	0.3709
6211202830	0.3083	0.3905
6211203830	0.3083	0.3905
6211204860	0.3083	0.3905
6211205830	0.3083	0.3905
6211206830	0.3083	0.3905
6211207830	0.3083	0.3905
6211330010	0.3083	0.3905
6211330015	0.3083	0.3905
6211330017	0.3083	0.3905
6211430064	0.3083	0.3905
6211430074	0.3083	0.3905
6212200020	0.2856	0.3617
6212300020	0.2856	0.3617
6303921000	0.2768	0.3506
6303922010	0.2768	0.3506
6303922030	0.2768	0.3506
6303922050	0.2768	0.3506
6303990010	0.2768	0.3506
5512290010	0.2170	0.2749
5516430010	0.2170	0.2749
5603910010	0.0217	0.0275

IMPORT ASSESSMENT TABLE—Continued

[Raw cotton fiber]

HTS No.	Conv. fact.	Cents/kg.
5603910090	0.0651	0.0825
5603920010	0.0217	0.0275
5603920090	0.0651	0.0825
5603930010	0.0217	0.0275
5603930090	0.0651	0.0825
5607502500	0.1684	0.2133
5609004000	0.2105	0.2666
5705002090	0.1808	0.2289
5801310000	0.2170	0.2749
5801320000	0.2170	0.2749
5801330000	0.2170	0.2749
5801360010	0.2170	0.2749
5801360020	0.2170	0.2749
5804109090	0.2193	0.2777
5806103090	0.2170	0.2749
5806393080	0.2170	0.2749
5808104000	0.2170	0.2749
5808107000	0.2170	0.2749
5810921000	0.2170	0.2749
5810929030	0.2170	0.2749
5810929050	0.2170	0.2749
5810929080	0.2170	0.2749
5903103000	0.1085	0.1374
5903203090	0.1085	0.1374
5903903090	0.1085	0.1374
5905001000	0.1085	0.1374
5905009000	0.1085	0.1374
5906913000	0.1085	0.1374
5906993000	0.1085	0.1374
5911101000	0.1736	0.2199
5911102000	0.0434	0.0550
5911900080	0.2105	0.2666
6002408020	0.1974	0.2500
6002408080	0.1974	0.2500
6002908020	0.1974	0.2500
6002908080	0.1974	0.2500
6101909060	0.2550	0.3230
6102100000	0.2550	0.3230
6102300500	0.1785	0.2261
6102909030	0.2550	0.3230
6103230040	0.2437	0.3086
6103230045	0.2437	0.3086
6103230055	0.2437	0.3086
6103230080	0.2437	0.3086
6103398060	0.2492	0.3156
6103431520	0.2384	0.3019
6103431535	0.2384	0.3019
6103431540	0.2384	0.3019
6103431550	0.2384	0.3019
6103431565	0.2384	0.3019
6103431570	0.2384	0.3019
6103432020	0.2384	0.3019
6103432025	0.2384	0.3019
6103491020	0.2437	0.3086
6103491060	0.2437	0.3086
6103492000	0.2437	0.3086
6103498024	0.2437	0.3086
6103498026	0.2437	0.3086
6103498060	0.2437	0.3086
6104198090	0.2492	0.3156
6104292020	0.2437	0.3086
6104292032	0.2437	0.3086
6104292045	0.2437	0.3086
6104292047	0.2437	0.3086
6104292063	0.2437	0.3086
6104292090	0.2437	0.3086
6104392090	0.2492	0.3156
6104499060	0.2437	0.3086
6104598090	0.2521	0.3192

IMPORT ASSESSMENT TABLE—Continued

[Raw cotton fiber]

HTS No.	Conv. fact.	Cents/kg.
6104610010	0.2384	0.3019
6104610020	0.2384	0.3019
6104610030	0.2384	0.3019
6104631020	0.2384	0.3019
6104631030	0.2384	0.3019
6104698020	0.2437	0.3086
6104698038	0.2437	0.3086
6104698040	0.2437	0.3086
6105908060	0.2333	0.2955
6107220025	0.2384	0.3019
6108199030	0.2358	0.2986
6108320010	0.2358	0.2986
6108320015	0.2358	0.2986
6108320025	0.2358	0.2986
6108920005	0.2358	0.2986
6108920015	0.2358	0.2986
6108920025	0.2358	0.2986
6108920030	0.2358	0.2986
6108920040	0.2358	0.2986
6109908030	0.2333	0.2955
6110909020	0.2492	0.3156
6110909022	0.2492	0.3156
6110909024	0.2492	0.3156
6110909038	0.2492	0.3156
6110909040	0.2492	0.3156
6110909042	0.2492	0.3156
6110909064	0.2492	0.3156
6110909066	0.2492	0.3156
6110909088	0.2492	0.3156
6110909090	0.2492	0.3156
6111301000	0.2384	0.3019
6111302000	0.2384	0.3019
6111303000	0.2384	0.3019
6111304000	0.2384	0.3019
6111305010	0.2384	0.3019
6111305015	0.2384	0.3019
6111305020	0.2384	0.3019
6111305030	0.2384	0.3019
6111305050	0.2384	0.3019
6111305070	0.2384	0.3019
6111901000	0.2384	0.3019
6111902000	0.2384	0.3019
6111903000	0.2384	0.3019
6111904000	0.2384	0.3019
6111905010	0.2384	0.3019
6111905020	0.2384	0.3019
6111905030	0.2384	0.3019
6111905050	0.2384	0.3019
6111905070	0.2384	0.3019
6112120010	0.2384	0.3019
6112120020	0.2384	0.3019
6112120030	0.2384	0.3019
6112120040	0.2384	0.3019
6112120050	0.2384	0.3019
6112120060	0.2384	0.3019
6112191010	0.2492	0.3156
6112191020	0.2492	0.3156
6112191030	0.2492	0.3156
6112191040	0.2492	0.3156
6112191050	0.2492	0.3156
6112191060	0.2492	0.3156
6112201060	0.2492	0.3156
6112201070	0.2492	0.3156
6112201080	0.2492	0.3156
6112201090	0.2492	0.3156
6112202030	0.2492	0.3156
6114301010	0.2437	0.3086
6114301020	0.2437	0.3086
6114303014	0.2437	0.3086

IMPORT ASSESSMENT TABLE—Continued

[Raw cotton fiber]

HTS No.	Conv. fact.	Cents/kg.
6114303020	0.2437	0.3086
6114303030	0.2437	0.3086
6114303042	0.2437	0.3086
6114303044	0.2437	0.3086
6114303052	0.2437	0.3086
6114303054	0.2437	0.3086
6114303060	0.2437	0.3086
6114303070	0.2437	0.3086
6115966020	0.2193	0.2777
6115991420	0.2193	0.2777
6115991920	0.2193	0.2777
6116109500	0.1616	0.2047
6117106020	0.2308	0.2924
6117909015	0.2308	0.2924
6201134015	0.1996	0.2528
6201134020	0.1996	0.2528
6201932010	0.2439	0.3089
6201932020	0.2439	0.3089
6201933511	0.2439	0.3089
6201933521	0.2439	0.3089
6201999060	0.2439	0.3089
6202134005	0.2524	0.3196
6202134010	0.2524	0.3196
6202199060	0.2524	0.3196
6202932010	0.2466	0.3124
6202932020	0.2466	0.3124
6202935011	0.2466	0.3124
6202935021	0.2466	0.3124
6202999061	0.2466	0.3124
6203199080	0.2466	0.3124
6203399060	0.2466	0.3124
6203431000	0.1887	0.2390
6203432010	0.2359	0.2988
6203432025	0.2359	0.2988
6203432050	0.2359	0.2988
6203432090	0.2359	0.2988
6203491010	0.2359	0.2988
6203491025	0.2359	0.2988
6203491050	0.2359	0.2988
6203491090	0.2359	0.2988
6203492015	0.2359	0.2988
6203492020	0.2359	0.2988
6203498045	0.2359	0.2988
6204198090	0.2466	0.3124
6204294020	0.2466	0.3124
6204294032	0.2466	0.3124
6204294047	0.2466	0.3124
6204294049	0.2466	0.3124
6204294080	0.2466	0.3124
6204294092	0.2466	0.3124
6204495030	0.2466	0.3124
6204533010	0.2524	0.3196
6204533020	0.2524	0.3196
6204594030	0.2524	0.3196
6204594060	0.2524	0.3196
6204631000	0.2019	0.2557
6204631510	0.2359	0.2988
6204631525	0.2359	0.2988
6204631550	0.2359	0.2988
6204633510	0.2412	0.3054
6204633525	0.2412	0.3054
6204633530	0.2412	0.3054
6204633532	0.2309	0.2924
6204633535	0.2309	0.2924
6204633540	0.2309	0.2924
6204691010	0.2359	0.2988
6204691025	0.2359	0.2988
6204691050	0.2359	0.2988
6204692510	0.2359	0.2988

IMPORT ASSESSMENT TABLE—Continued

[Raw cotton fiber]

HTS No.	Conv. fact.	Cents/kg.
6204692520	0.2359	0.2988
6204692530	0.2359	0.2988
6204692540	0.2309	0.2924
6204692550	0.2309	0.2924
6204692560	0.2309	0.2924
6204696030	0.2359	0.2988
6204699030	0.2359	0.2988
6204699044	0.2359	0.2988
6204699046	0.2359	0.2988
6205901000	0.2359	0.2988
6205903030	0.2359	0.2988
6205904030	0.2359	0.2988
6205904040	0.2359	0.2988
6206100030	0.2359	0.2988
6206100050	0.2359	0.2988
6206900030	0.2359	0.2988
6207997520	0.2412	0.3054
6207998510	0.2412	0.3054
6207998520	0.2412	0.3054
6208110000	0.2412	0.3054
6208199000	0.2412	0.3054
6208299030	0.2359	0.2988
6208995010	0.2412	0.3054
6208995020	0.2412	0.3054
6208998010	0.2412	0.3054
6208998020	0.2412	0.3054
6209303010	0.2334	0.2956
6209303020	0.2334	0.2956
6209303030	0.2334	0.2956
6209303040	0.2334	0.2956
6210109010	0.2170	0.2749
6210109040	0.2170	0.2749
6211118040	0.2412	0.3054
6211201515	0.2343	0.2967
6211201565	0.2343	0.2967
6211202820	0.2466	0.3124
6211203820	0.2466	0.3124
6211204835	0.2466	0.3124
6211205820	0.2466	0.3124
6211206820	0.2466	0.3124
6211207820	0.2466	0.3124
6211399010	0.2466	0.3124
6211399020	0.2466	0.3124
6211399030	0.2466	0.3124
6211399040	0.2466	0.3124
6211399050	0.2466	0.3124
6211399060	0.2466	0.3124
6211399070	0.2466	0.3124
6211399090	0.2466	0.3124
6211430010	0.2466	0.3124
6211430020	0.2466	0.3124
6211430030	0.2466	0.3124
6211430040	0.2466	0.3124
6211430050	0.2466	0.3124
6211430060	0.2466	0.3124
6211430066	0.2466	0.3124
6211430091	0.2466	0.3124
6211499010	0.2466	0.3124
6211499020	0.2466	0.3124
6211499030	0.2466	0.3124
6211499040	0.2466	0.3124
6211499050	0.2466	0.3124
6211499060	0.2466	0.3124
6211499070	0.2466	0.3124
6211499080	0.2466	0.3124
6211499090	0.2466	0.3124
6212105020	0.2285	0.2893
6212105030	0.2285	0.2893
6212109020	0.2285	0.2893

IMPORT ASSESSMENT TABLE—Continued

[Raw cotton fiber]

HTS No.	Conv. fact.	Cents/kg.
6212109040	0.2285	0.2893
6212900010	0.1828	0.2315
6212900020	0.1828	0.2315
6212900030	0.1828	0.2315
6214900090	0.2285	0.2893
6216000800	0.0685	0.0868
6216001730	0.1599	0.2025
6216002425	0.1651	0.2091
6216002600	0.1651	0.2091
6216002925	0.1651	0.2091
6216003100	0.1651	0.2091
6217109530	0.2412	0.3054
6217909010	0.2412	0.3054
6217909035	0.2412	0.3054
6217909060	0.2412	0.3054
6217909085	0.2412	0.3054
6301900030	0.2215	0.2805
6302290020	0.2215	0.2805
6302390030	0.2215	0.2805
6302992000	0.2215	0.2805
6304193060	0.2215	0.2805
6304910070	0.2215	0.2805
6304996040	0.2215	0.2805
6101900500	0.1912	0.2422
6103109080	0.1827	0.2315
6103292066	0.1827	0.2315
6103292068	0.1827	0.2315
6104230032	0.1827	0.2315
6104230034	0.1827	0.2315
6104230036	0.1827	0.2315
6104291030	0.1827	0.2315
6104291040	0.1827	0.2315
6104291050	0.1827	0.2315
6107299000	0.1788	0.2264
6110909028	0.1869	0.2367
6117808770	0.1731	0.2193
6117809570	0.1731	0.2193
6205903050	0.1769	0.2241
6206900040	0.1769	0.2241
6217109520	0.1809	0.2291
6217909005	0.1809	0.2291
6217909030	0.1809	0.2291
6217909055	0.1809	0.2291
6217909080	0.1809	0.2291
9404908536	0.0997	0.1262
5112904000	0.1085	0.1374
5112905000	0.1085	0.1374
5112909010	0.1085	0.1374
5112909090	0.1085	0.1374
5509210000	0.1053	0.1333
5509220010	0.1053	0.1333
5509220090	0.1053	0.1333
5512110010	0.1085	0.1374
5512110022	0.1085	0.1374
5512110027	0.1085	0.1374
5512110030	0.1085	0.1374
5512110040	0.1085	0.1374
5512110050	0.1085	0.1374
5512110060	0.1085	0.1374
5512110070	0.1085	0.1374
5512110090	0.1085	0.1374
5512190005	0.1085	0.1374
5512190010	0.1085	0.1374
5512190015	0.1085	0.1374
5512190022	0.1085	0.1374
5512190027	0.1085	0.1374
5512190030	0.1085	0.1374
5512190035	0.1085	0.1374
5512190040	0.1085	0.1374

IMPORT ASSESSMENT TABLE—Continued

[Raw cotton fiber]

HTS No.	Conv. fact.	Cents/kg.
5512190045	0.1085	0.1374
5512190050	0.1085	0.1374
5512190090	0.1085	0.1374
5515110005	0.1085	0.1374
5515110010	0.1085	0.1374
5515110015	0.1085	0.1374
5515110020	0.1085	0.1374
5515110025	0.1085	0.1374
5515110030	0.1085	0.1374
5515110035	0.1085	0.1374
5515110040	0.1085	0.1374
5515110045	0.1085	0.1374
5515110090	0.1085	0.1374
5515120010	0.1085	0.1374
5515120022	0.1085	0.1374
5515120027	0.1085	0.1374
5515120030	0.1085	0.1374
5515120040	0.1085	0.1374
5515120090	0.1085	0.1374
5515190005	0.1085	0.1374
5515190010	0.1085	0.1374
5515190015	0.1085	0.1374
5515190020	0.1085	0.1374
5515190025	0.1085	0.1374
5515190030	0.1085	0.1374
5515190035	0.1085	0.1374
5515190040	0.1085	0.1374
5515190045	0.1085	0.1374
5515190090	0.1085	0.1374
5515290005	0.1085	0.1374
5515290010	0.1085	0.1374
5515290015	0.1085	0.1374
5515290020	0.1085	0.1374
5515290025	0.1085	0.1374
5515290030	0.1085	0.1374
5515290035	0.1085	0.1374
5515290040	0.1085	0.1374
5515290045	0.1085	0.1374
5515290090	0.1085	0.1374
5515999005	0.1085	0.1374
5515999010	0.1085	0.1374
5515999015	0.1085	0.1374
5515999020	0.1085	0.1374
5515999025	0.1085	0.1374
5515999030	0.1085	0.1374
5515999035	0.1085	0.1374
5515999040	0.1085	0.1374
5515999045	0.1085	0.1374
5515999090	0.1085	0.1374
5516210010	0.1085	0.1374
5516210020	0.1085	0.1374
5516210030	0.1085	0.1374
5516210040	0.1085	0.1374
5516210090	0.1085	0.1374
5516220010	0.1085	0.1374
5516220020	0.1085	0.1374
5516220030	0.1085	0.1374
5516220040	0.1085	0.1374
5516220090	0.1085	0.1374
5516230010	0.1085	0.1374
5516230020	0.1085	0.1374
5516230030	0.1085	0.1374
5516230040	0.1085	0.1374
5516230090	0.1085	0.1374
5516240010	0.1085	0.1374
5516240020	0.1085	0.1374
5516240030	0.1085	0.1374
5516240040	0.1085	0.1374
5516240085	0.1085	0.1374

IMPORT ASSESSMENT TABLE—Continued

[Raw cotton fiber]

HTS No.	Conv. fact.	Cents/kg.
5516240095	0.1085	0.1374
5602101000	0.0543	0.0687
5702312000	0.0895	0.1133
5702322000	0.0895	0.1133
5702391000	0.0895	0.1133
5702421000	0.0895	0.1133
5702422020	0.0895	0.1133
5702422080	0.0895	0.1133
5702492000	0.0895	0.1133
5702502000	0.0895	0.1133
5702505200	0.0895	0.1133
5802200020	0.1085	0.1374
5802300090	0.1085	0.1374
5805001000	0.1085	0.1374
5806400000	0.0814	0.1031
6001106000	0.1096	0.1389
6001220000	0.1096	0.1389
6001290000	0.1096	0.1389
6001999000	0.1096	0.1389
6003301000	0.1096	0.1389
6003306000	0.1096	0.1389
6003401000	0.1096	0.1389
6003406000	0.1096	0.1389
6003901000	0.1096	0.1389
6003909000	0.1096	0.1389
6005310010	0.1096	0.1389
6005310080	0.1096	0.1389
6005320010	0.1096	0.1389
6005320080	0.1096	0.1389
6005330010	0.1096	0.1389
6005330080	0.1096	0.1389
6005340010	0.1096	0.1389
6005340080	0.1096	0.1389
6005410010	0.1096	0.1389
6005410080	0.1096	0.1389
6005420010	0.1096	0.1389
6005420080	0.1096	0.1389
6005430010	0.1096	0.1389
6005430080	0.1096	0.1389
6005440010	0.1096	0.1389
6005440080	0.1096	0.1389
6005909000	0.1096	0.1389
6006909000	0.1096	0.1389
6103104000	0.1218	0.1543
6103105000	0.1218	0.1543
6103109040	0.1218	0.1543
6103109050	0.1218	0.1543
6103230025	0.1218	0.1543
6103230030	0.1218	0.1543
6103230035	0.1218	0.1543
6103230070	0.1218	0.1543
6103292030	0.1218	0.1543
6103292036	0.1218	0.1543
6103292040	0.1218	0.1543
6103292044	0.1218	0.1543
6103292048	0.1218	0.1543
6103292052	0.1218	0.1543
6103292054	0.1218	0.1543
6103292070	0.1218	0.1543
6103292074	0.1218	0.1543
6103292082	0.1218	0.1543
6104230016	0.1218	0.1543
6104230020	0.1218	0.1543
6104230026	0.1218	0.1543
6104230030	0.1218	0.1543
6104291010	0.1218	0.1543
6104291020	0.1218	0.1543
6104292073	0.1218	0.1543
6104292075	0.1218	0.1543

IMPORT ASSESSMENT TABLE—Continued

[Raw cotton fiber]

HTS No.	Conv. fact.	Cents/kg.
6107191000	0.1192	0.1509
6107220015	0.1192	0.1509
6107999000	0.1192	0.1509
6110909012	0.1246	0.1578
6112310010	0.1192	0.1509
6112310020	0.1192	0.1509
6112410010	0.1192	0.1509
6112410020	0.1192	0.1509
6112410030	0.1192	0.1509
6112410040	0.1192	0.1509
6114302060	0.1218	0.1543
6115106000	0.1096	0.1389
6115999000	0.1096	0.1389
6116938800	0.1154	0.1462
6116939400	0.1154	0.1462
6116994800	0.1154	0.1462
6116995400	0.1154	0.1462
6203122010	0.1233	0.1562
6203122020	0.1233	0.1562
6203332010	0.1233	0.1562
6203332020	0.1233	0.1562
6203392010	0.1233	0.1562
6203392020	0.1233	0.1562
6203431500	0.1180	0.1494
6203432005	0.1180	0.1494
6203434010	0.1167	0.1478
6203434015	0.1167	0.1478
6203434020	0.1167	0.1478
6203434030	0.1167	0.1478
6203434035	0.1167	0.1478
6203434040	0.1167	0.1478
6203491005	0.1180	0.1494
6203492030	0.1180	0.1494
6203492045	0.1180	0.1494
6203492050	0.1180	0.1494
6203492060	0.1180	0.1494
6204132010	0.1233	0.1562
6204132020	0.1233	0.1562
6204192000	0.1233	0.1562
6204294084	0.1233	0.1562
6204619040	0.1180	0.1494
6204631200	0.1180	0.1494
6204631505	0.1180	0.1494
6204691005	0.1180	0.1494
6205900710	0.1180	0.1494
6205900720	0.1180	0.1494
6206100040	0.1180	0.1494
6207291000	0.1167	0.1478
6207299030	0.1167	0.1478
6208195000	0.1206	0.1527
6208220000	0.1180	0.1494
6208920010	0.1206	0.1527
6208920020	0.1206	0.1527
6208920030	0.1206	0.1527
6208920040	0.1206	0.1527
6209900500	0.1154	0.1462
6210203000	0.0362	0.0458
6210205000	0.0844	0.1069
6210303000	0.0362	0.0458
6210305000	0.0844	0.1069
6210307000	0.0362	0.0458
6210403000	0.0370	0.0469
6210405031	0.0863	0.1093
6210405039	0.0863	0.1093
6210503000	0.0370	0.0469
6210505020	0.0863	0.1093
6210505031	0.0863	0.1093
6210505039	0.0863	0.1093
6210505040	0.0863	0.1093

IMPORT ASSESSMENT TABLE—Continued

[Raw cotton fiber]

HTS No.	Conv. fact.	Cents/kg.
6210505055	0.0863	0.1093
6211111010	0.1206	0.1527
6211111020	0.1206	0.1527
6211200420	0.0965	0.1222
6211200440	0.0965	0.1222
6211202400	0.1233	0.1562
6211203400	0.1233	0.1562
6211204400	0.1233	0.1562
6211205400	0.1233	0.1562
6211206400	0.1233	0.1562
6211207400	0.1233	0.1562
6211330003	0.0987	0.1249
6211330007	0.1233	0.1562
6211390510	0.1233	0.1562
6211390520	0.1233	0.1562
6211390530	0.1233	0.1562
6211390540	0.1233	0.1562
6211390545	0.1233	0.1562
6211390551	0.1233	0.1562
6211410030	0.1233	0.1562
6211430003	0.0987	0.1249
6211430007	0.1233	0.1562
6212200030	0.1142	0.1447
6212300030	0.1142	0.1447
6212900050	0.0914	0.1157
6214300000	0.1142	0.1447
6214400000	0.1142	0.1447
6215100025	0.1142	0.1447
6215200000	0.1142	0.1447
6304113000	0.1107	0.1402
5512910010	0.0543	0.0687
5512990005	0.0543	0.0687
5512990010	0.0543	0.0687
5512990015	0.0543	0.0687
5512990020	0.0543	0.0687
5512990025	0.0543	0.0687
5512990030	0.0543	0.0687
5512990035	0.0543	0.0687
5512990040	0.0543	0.0687
5512990045	0.0543	0.0687
5512990090	0.0543	0.0687
5516910010	0.0543	0.0687
5516910020	0.0543	0.0687
5516910030	0.0543	0.0687
5516910040	0.0543	0.0687
5516910050	0.0543	0.0687
5516910060	0.0543	0.0687
5516910070	0.0543	0.0687
5516910090	0.0543	0.0687
5516920010	0.0543	0.0687
5516920020	0.0543	0.0687
5516920030	0.0543	0.0687
5516920040	0.0543	0.0687
5516920050	0.0543	0.0687
5516920060	0.0543	0.0687
5516920070	0.0543	0.0687
5516920090	0.0543	0.0687
5516930010	0.0543	0.0687
5516930020	0.0543	0.0687
5516930090	0.0543	0.0687
5516940010	0.0543	0.0687
5516940020	0.0543	0.0687
5516940030	0.0543	0.0687
5516940040	0.0543	0.0687
5516940050	0.0543	0.0687
5516940060	0.0543	0.0687
5516940070	0.0543	0.0687
5516940090	0.0543	0.0687
5701101300	0.0526	0.0667

IMPORT ASSESSMENT TABLE—Continued

[Raw cotton fiber]

HTS No.	Conv. fact.	Cents/kg.
5701101600	0.0526	0.0667
5701104000	0.0526	0.0667
5701109000	0.0526	0.0667
5701901030	0.0526	0.0667
5701901090	0.0526	0.0667
5701902030	0.0526	0.0667
5701902090	0.0526	0.0667
5702101000	0.0447	0.0567
5702109010	0.0447	0.0567
5702109030	0.0447	0.0567
5702109090	0.0447	0.0567
5702201000	0.0447	0.0567
5702311000	0.0447	0.0567
5702392090	0.0447	0.0567
5702411000	0.0447	0.0567
5702412000	0.0447	0.0567
5702504000	0.0447	0.0567
5702912000	0.0447	0.0567
5702913000	0.0447	0.0567
5702914000	0.0447	0.0567
5702921000	0.0447	0.0567
5702929000	0.0447	0.0567
5703201000	0.0452	0.0572
5703202010	0.0452	0.0572
5703302000	0.0452	0.0572
5705001000	0.0452	0.0572
5705002005	0.0452	0.0572
5705002015	0.0452	0.0572
5705002030	0.0452	0.0572
6001920010	0.0548	0.0694
6001920020	0.0548	0.0694
6001920030	0.0548	0.0694
6001920040	0.0548	0.0694
6103101000	0.0637	0.0807
6103292028	0.0609	0.0772
6106901500	0.0583	0.0739
6203433510	0.0590	0.0747
6203433590	0.0590	0.0747
6204110000	0.0617	0.0781
6204412010	0.0603	0.0764
6204412020	0.0603	0.0764
6204432000	0.0603	0.0764
6204510010	0.0631	0.0799
6204510020	0.0631	0.0799
6204532010	0.0631	0.0799
6204532020	0.0631	0.0799
6204611010	0.0590	0.0747
6204611020	0.0590	0.0747
6204619010	0.0590	0.0747
6204619020	0.0590	0.0747
6204619030	0.0590	0.0747
6204632510	0.0590	0.0747
6204632520	0.0590	0.0747
6204633010	0.0603	0.0764
6204633090	0.0603	0.0764
6204692010	0.0590	0.0747
6204692020	0.0590	0.0747
6204692030	0.0590	0.0747
6206203010	0.0590	0.0747
6206203020	0.0590	0.0747
6208992010	0.0603	0.0764
6208992020	0.0603	0.0764
6211121010	0.0603	0.0764
6211121020	0.0603	0.0764
6211410020	0.0617	0.0781
6211410040	0.0617	0.0781
6211410050	0.0617	0.0781
6211410055	0.0617	0.0781
6211410061	0.0617	0.0781

IMPORT ASSESSMENT TABLE—Continued

[Raw cotton fiber]

HTS No.	Conv. fact.	Cents/kg.
5512210010	0.0326	0.0412
5512210020	0.0326	0.0412
5512210030	0.0326	0.0412
5512210040	0.0326	0.0412
5512210060	0.0326	0.0412
5512210070	0.0326	0.0412
5512210090	0.0326	0.0412

* * * * *

Authority: 7 U.S.C. 2101–2118.

Dated: August 22, 2011.

David R. Shipman,

Acting Administrator, Agricultural Marketing Service.

[FR Doc. 2011–22159 Filed 8–30–11; 8:45 am]

BILLING CODE 3410–02–P

DEPARTMENT OF TRANSPORTATION

Federal Aviation Administration

14 CFR Part 39

[Docket No. FAA–2011–0910; Directorate Identifier 2011–NM–151–AD; Amendment 39–16797; AD 2011–18–15]

RIN 2120–AA64

Airworthiness Directives; Bombardier, Inc. Model DHC–8–400 Series Airplanes

AGENCY: Federal Aviation Administration (FAA), Department of Transportation (DOT).

ACTION: Final rule; request for comments.

SUMMARY: We are adopting a new airworthiness directive (AD) for the products listed above. This AD results from mandatory continuing airworthiness information (MCAI) originated by an aviation authority of another country to identify and correct an unsafe condition on an aviation product. The MCAI describes the unsafe condition as:

There have been three in-service reports of cracked barrel nuts found at the front spar locations of the wing-to-fuselage attachment joints. Additionally, three operators have reported finding a loose washer in the barrel nut assembly. Failure of the barrel nuts could compromise the structural integrity of the wing-to-fuselage attachments.

* * * * *

The unsafe condition could result in separation of the wing from the airplane during flight. This AD requires actions that are intended to address the unsafe condition described in the MCAI.

DATES: This AD becomes effective September 15, 2011.

The Director of the Federal Register approved the incorporation by reference of a certain publication listed in the AD as of September 15, 2011.

We must receive comments on this AD by October 17, 2011.

ADDRESSES: You may send comments by any of the following methods:

- *Federal eRulemaking Portal:* Go to *http://www.regulations.gov.* Follow the instructions for submitting comments.
- *Fax:* (202) 493–2251.
- *Mail:* U.S. Department of Transportation, Docket Operations, M–30, West Building Ground Floor, Room W12–140, 1200 New Jersey Avenue, SE., Washington, DC 20590.
- *Hand Delivery:* U.S. Department of Transportation, Docket Operations, M–30, West Building Ground Floor, Room W12–140, 1200 New Jersey Avenue, SE., Washington, DC, between 9 a.m. and 5 p.m., Monday through Friday, except Federal holidays.

Examining the AD Docket

You may examine the AD docket on the Internet at *http://www.regulations.gov;* or in person at the Docket Operations office between 9 a.m. and 5 p.m., Monday through Friday, except Federal holidays. The AD docket contains this AD, the regulatory evaluation, any comments received, and other information. The street address for the Docket Operations office (telephone (800) 647–5527) is in the **ADDRESSES** section. Comments will be available in the AD docket shortly after receipt.

FOR FURTHER INFORMATION CONTACT: Aziz Ahmed, Aerospace Engineer, Airframe and Mechanical Systems Branch, ANE–171, FAA, New York Aircraft Certification Office, 1600 Stewart Avenue, Suite 410, Westbury, New York 11590; telephone (516) 228–7329; fax (516) 794–5531.

SUPPLEMENTARY INFORMATION:

Discussion

Transport Canada Civil Aviation (TCCA), which is the aviation authority for Canada, has issued Canadian Emergency Airworthiness Directive CF–2011–24, dated July 21, 2011 (referred to after this as ''the MCAI''), to correct an unsafe condition for the specified products. The MCAI states:

There have been three in-service reports of cracked barrel nuts found at the front spar locations of the wing-to-fuselage attachment joints. Additionally, three operators have reported finding a loose washer in the barrel nut assembly. Failure of the barrel nuts could compromise the structural integrity of the wing-to-fuselage attachments.

Preliminary investigation determined that these cracks are due to hydrogen embrittlement.

This [TCCA airworthiness] directive mandates an initial and repetitive [torque checks to determine if the bolt pre-load is correct and, if necessary], detailed inspection of the barrel nuts [and cradle for cracking, pitting, and corrosion; and replacement of hardware if necessary].

The unsafe condition could result in separation of the wing from the airplane during flight.

Relevant Service Information

Bombardier has issued Alert Service Bulletin A84–57–25, dated July 20, 2011. The actions described in this service information are intended to correct the unsafe condition identified in the MCAI.

FAA's Determination and Requirements of This AD

This product has been approved by the aviation authority of another country, and is approved for operation in the United States. Pursuant to our bilateral agreement with the State of Design Authority, we have been notified of the unsafe condition described in the MCAI and service information referenced above. We are issuing this AD because we evaluated all pertinent information and determined the unsafe condition exists and is likely to exist or develop on other products of the same type design.

Differences Between the AD and the MCAI or Service Information

We have reviewed the MCAI and related service information and, in general, agree with their substance. But we might have found it necessary to use different words from those in the MCAI to ensure the AD is clear for U.S. operators and is enforceable. In making these changes, we do not intend to differ substantively from the information provided in the MCAI and related service information.

We might also have required different actions in this AD from those in the MCAI in order to follow FAA policies. Any such differences are highlighted in a Note within the AD.

FAA's Determination of the Effective Date

An unsafe condition exists that requires the immediate adoption of this AD. The FAA has found that the risk to the flying public justifies waiving notice and comment prior to adoption of this rule because failure of the wing-to-fuselage attachments could result in separation of the wing from the airplane during flight. Therefore, we determined that notice and opportunity for public

comment before issuing this AD are impracticable and that good cause exists for making this amendment effective in fewer than 30 days.

Comments Invited

This AD is a final rule that involves requirements affecting flight safety, and we did not precede it by notice and opportunity for public comment. We invite you to send any written relevant data, views, or arguments about this AD. Send your comments to an address listed under the **ADDRESSES** section. Include ''Docket No. FAA–2011–0910; Directorate Identifier 2011–NM–151–AD'' at the beginning of your comments. We specifically invite comments on the overall regulatory, economic, environmental, and energy aspects of this AD. We will consider all comments received by the closing date and may amend this AD because of those comments.

We will post all comments we receive, without change, to *http://www.regulations.gov,* including any personal information you provide. We will also post a report summarizing each substantive verbal contact we receive about this AD.

Authority for This Rulemaking

Title 49 of the United States Code specifies the FAA's authority to issue rules on aviation safety. Subtitle I, section 106, describes the authority of the FAA Administrator. ''Subtitle VII: Aviation Programs,'' describes in more detail the scope of the Agency's authority.

We are issuing this rulemaking under the authority described in ''Subtitle VII, part A, subpart III, Section 44701: General requirements.'' Under that section, Congress charges the FAA with promoting safe flight of civil aircraft in air commerce by prescribing regulations for practices, methods, and procedures the Administrator finds necessary for safety in air commerce. This regulation is within the scope of that authority because it addresses an unsafe condition that is likely to exist or develop on products identified in this rulemaking action.

Regulatory Findings

We determined that this AD will not have federalism implications under Executive Order 13132. This AD will not have a substantial direct effect on the States, on the relationship between the national government and the States, or on the distribution of power and responsibilities among the various levels of government.

For the reasons discussed above, I certify this AD:

1. Is not a ''significant regulatory action'' under Executive Order 12866;

2. Is not a ''significant rule'' under the DOT Regulatory Policies and Procedures (44 FR 11034, February 26, 1979); and

3. Will not have a significant economic impact, positive or negative, on a substantial number of small entities under the criteria of the Regulatory Flexibility Act.

We prepared a regulatory evaluation of the estimated costs to comply with this AD and placed it in the AD docket.

List of Subjects in 14 CFR Part 39

Air transportation, Aircraft, Aviation safety, Incorporation by reference, Safety.

Adoption of the Amendment

Accordingly, under the authority delegated to me by the Administrator, the FAA amends 14 CFR part 39 as follows:

PART 39—AIRWORTHINESS DIRECTIVES

■ 1. The authority citation for part 39 continues to read as follows:

Authority: 49 U.S.C. 106(g), 40113, 44701.

§ 39.13 [Amended]

■ 2. The FAA amends § 39.13 by adding the following new AD:

2011–18–15 Bombardier, Inc.: Amendment 39–16797. Docket No. FAA–2011–0910; Directorate Identifier 2011–NM–151–AD.

Effective Date

(a) This airworthiness directive (AD) becomes effective September 15, 2011.

Affected ADs

(b) None.

Applicability

(c) This AD applies to Bombardier, Inc. Model DHC–8–400, -401, and -402 airplanes, certificated in any category, serial numbers 4001 and subsequent.

Subject

(d) Air Transport Association (ATA) of America Code 57: Wings.

Reason

(e) The mandatory continued airworthiness information (MCAI) states:

There have been three in-service reports of cracked barrel nuts found at the front spar locations of the wing-to-fuselage attachment joints. Additionally, three operators have reported finding a loose washer in the barrel nut assembly. Failure of the barrel nuts could compromise the structural integrity of the wing-to-fuselage attachments.

The unsafe condition could result in separation of the wing from the airplane during flight.

Compliance

(f) You are responsible for having the actions required by this AD performed within the compliance times specified, unless the actions have already been done.

Initial and Repetitive Inspections

(g) At the applicable time specified in paragraph (g)(1) or (g)(2) of this AD: Do a torque check to determine if the bolt preload is correct, and if the preload is correct, before further flight, do a detailed inspection of each barrel nut and cradle for cracking, pitting or corrosion, in accordance with paragraph 3.B., part A, of the Accomplishment Instructions of Bombardier Alert Service Bulletin A84–57–25, dated July 20, 2011. Repeat the torque check and, as applicable, the inspection thereafter at intervals not to exceed 2,000 flight hours or 12 months, whichever occurs first.

(1) For airplanes that have accumulated 1,900 or more total flight hours as of the effective date of this AD, or for which it has been 12 months or more since the date of issuance of the original Canadian airworthiness certificate or the date of issuance of the original Canadian export certificate of airworthiness as of the effective date of this AD: Within 100 flight hours or 10 days after the effective date of this AD, whichever occurs first.

(2) For airplanes that have accumulated less than 1,900 total flight hours as of the effective date of this AD, and for which it has been less than 12 months since the date of issuance of the original Canadian airworthiness certificate or the date of issuance of the original Canadian export certificate of airworthiness as of the effective date of this AD: Prior to the accumulation of 2,000 total flight hours or within 12 months since the date of issuance of the original Canadian standard airworthiness certificate or the date of issuance of the original Canadian export certificate of airworthiness, whichever occurs first.

Corrective Actions

(h) If any bolt preload is found to be incorrect (*i.e.,* the ring can be rotated during any torque check required by this AD), before further flight, replace all hardware at that location (except the saddle washer and retainer) in accordance with paragraph 3.B., part B, of the Accomplishment Instructions of Bombardier Alert Service Bulletin A84–57–25, dated July 20, 2011.

(i) If any crack, pitting, or corrosion of the barrel nut or cradle is found during any inspection required by this AD, before further flight, replace all hardware at that location (except the saddle washer and retainer) in accordance with paragraph 3.B., part B, of the Accomplishment Instructions of Bombardier Alert Service Bulletin A84–57–25, dated July 20, 2011.

Credit for Actions Accomplished in Accordance With Previous Service Information

(j) Accomplishment of torque checks, initial inspections, or replacements before the effective date of this AD, in accordance with Bombardier Alert Service Bulletin A84–57–19, dated February 1, 2008; Revision A,

dated February 6, 2008; Revision B, dated March 6, 2008; or Revision C, dated August 20, 2008; is acceptable for compliance with the corresponding requirements of paragraphs (g) and (h) of this AD. However, the repetitive inspections required by paragraph (g) of this AD must be continued at the time specified.

FAA AD Differences

Note 1: This AD differs from the MCAI and/or service information as follows: No differences.

Special Flight Permits

(k) Special flight permits, as described in Section 21.197 and Section 21.199 of the Federal Aviation Regulations (14 CFR 21.197 and 21.199), may be issued to operate the airplane to a location where the requirements of this AD can be accomplished, but concurrence by the Manager, New York Aircraft Certification Office (ACO), FAA, is required prior to issuance of the special flight permit. Before using any approved special flight permits, notify your principal maintenance inspector (PMI) or principal avionics inspector (PAI), as appropriate, or lacking a principal inspector, your local Flight Standards District Office (FSDO). Operators must request a repair drawing from Bombardier which provides recommendations for a one-time special flight permit. The repair drawing will be applicable to the operator's aircraft serial number only. Special flight permits may be permitted provided that the conditions specified in paragraphs (k)(1), (k)(2), (k)(3), (k)(4), and (k)(5) of this AD are met.

(1) Only one barrel nut out of four is cracked, one cradle is cracked, or one washer is loose; all other strut bolt locations must be free of damage.

(2) The airplane must operate with reduced airspeed not to exceed 180 KIAS [knots indicated air speed]. No passengers and no cargo are onboard.

(3) The airplane must not operate in known or forecast turbulence, other than light turbulence.

(4) The airplane descent rate on landing flare-out is not to exceed 5 feet per second.

(5) Heavy braking or hard turning of the airplane upon landing is to be avoided if possible.

Other FAA AD Provisions

(l) The following provisions also apply to this AD:

(1) *Alternative Methods of Compliance (AMOCs):* The Manager, ANE–170, New York Aircraft Certification Office (ACO), FAA, has the authority to approve AMOCs for this AD, if requested using the procedures found in 14 CFR 39.19. In accordance with 14 CFR 39.19, send your request to your principal inspector or local Flight Standards District Office, as appropriate. If sending information directly to the ACO, send it to *Attn:* Program Manager, Continuing Operational Safety, FAA, New York ACO, 1600 Stewart Avenue, Suite 410, Westbury, New York 11590; telephone 516–228–7300; fax 516–794–5531. Before using any approved AMOC, notify your appropriate principal inspector, or lacking a principal inspector, the manager of the local flight standards district office/certificate holding district office. The AMOC approval letter must specifically reference this AD.

(2) *Airworthy Product:* For any requirement in this AD to obtain corrective actions from a manufacturer or other source, use these actions if they are FAA-approved. Corrective actions are considered FAA-approved if they are approved by the State of Design Authority (or their delegated agent). You are required to assure the product is airworthy before it is returned to service.

Related Information

(m) Refer to MCAI Canadian Emergency Airworthiness Directive CF–2011–24, dated July 21, 2011; and Bombardier Alert Service Bulletin A84–57–25, dated July 20, 2011; for related information.

Material Incorporated by Reference

(n) You must use Bombardier Alert Service Bulletin A84–57–25, dated July 20, 2011, to do the actions required by this AD, unless the AD specifies otherwise.

(1) The Director of the Federal Register approved the incorporation by reference of this service information under 5 U.S.C. 552(a) and 1 CFR part 51.

(2) For service information identified in this AD, contact Bombardier, Inc., Q-Series Technical Help Desk, 123 Garratt Boulevard, Toronto, Ontario M3K 1Y5, Canada; telephone 416–375–4000; fax 416–375–4539; e-mail *thd.qseries@aero.bombardier.com;* Internet *http://www.bombardier.com.*

(3) You may review copies of the service information at the FAA, Transport Airplane Directorate, 1601 Lind Avenue, SW., Renton, Washington. For information on the availability of this material at the FAA, call 425–227–1221.

(4) You may also review copies of the service information that is incorporated by reference at the National Archives and Records Administration (NARA). For information on the availability of this material at NARA, call 202–741–6030, or go to: *http://www.archives.gov/federal_register/code_of_federal_regulations/ibr_locations.html.*

Issued in Renton, Washington, on August 19, 2011.

Ali Bahrami,

Manager, Transport Airplane Directorate, Aircraft Certification Service.

[FR Doc. 2011–22013 Filed 8–30–11; 8:45 am]

BILLING CODE 4910–13–P

DEPARTMENT OF TRANSPORTATION

Federal Aviation Administration

14 CFR Parts 61, 91, 141, and 142

[Docket No.: FAA–2008–0938; Amendment Nos. 61–128, 91–324, 141–15, and 142–7]

RIN 2120–AJ18

Pilot in Command Proficiency Check and Other Changes to the Pilot and Pilot School Certification Rules

AGENCY: Federal Aviation Administration (FAA), DOT.

ACTION: Final rule.

SUMMARY: This final rule amends the FAA's regulations concerning pilot, flight instructor, and pilot school certification. This rule will require pilot-in-command (PIC) proficiency checks for pilots who act as PIC of turbojet-powered aircraft except for pilots of single seat experimental jets and pilots of experimental jets who do not carry passengers. It allows pilot applicants to apply concurrently for a private pilot certificate and an instrument rating and permits pilot schools and provisional pilot schools to apply for a combined private pilot certification and instrument rating course. In addition, the rule will: Allow pilot schools to use internet-based training programs without requiring schools to have a physical ground training facility; revise the definition of ''complex airplane;'' and allow the use of airplanes with throwover control wheels for expanded flight training. The final rule also amends the FAA's regulations concerning pilot certificates to allow the conversion of a foreign pilot license to a U.S. pilot certificate under the provisions of a Bilateral Aviation Safety Agreement (BASA) and Implementing Procedures for Licensing (IPL). The FAA has determined these amendments are needed to enhance safety, respond to changes in the aviation industry, and reduce unnecessary regulatory burdens.

DATES: These amendments become effective October 31, 2011.

FOR FURTHER INFORMATION CONTACT: For technical questions concerning this final rule contact Gregory French, Airman Certification and Training Branch, General Aviation and Commercial Division, AFS–810, Federal Aviation Administration, 800 Independence Avenue, SW., Washington, DC 20591; telephone (202) 493–5474; e-mail *Gregory.French@faa.gov.* For legal questions concerning this final rule contact Michael Chase, Esq., Office of Chief Counsel, AGC–240, Regulations

Division, Federal Aviation Administration, 800 Independence Avenue, SW., Washington, DC 20591; telephone (202) 267–3110; e-mail *Michael.Chase@faa.gov.*

SUPPLEMENTARY INFORMATION:

I. Authority for This Rulemaking

The FAA's authority to issue rules regarding aviation safety is found in Title 49 of the United States Code. Subtitle I, section 106 describes the authority of the FAA Administrator, including the authority to issue, rescind, and revise regulations. Subtitle VII, Aviation Programs, describes in more detail the scope of the agency's authority.

This rulemaking is promulgated under the authority described in Subtitle VII, Part A, Chapter 447—Safety Regulation. Under section 44701, the FAA is charged with promoting safe flight of civil aircraft in air commerce by prescribing regulations necessary for safety. Under section 44703, the FAA issues an airman certificate to an individual when we find, after investigation, that the individual is qualified for, and physically able to perform the duties related to, the position authorized by the certificate. In this final rule, we amend the training, qualification, certification, and operating requirements for pilots.

These changes are intended to ensure that flight crewmembers have the training and qualifications to operate aircraft safely. For this reason, the changes are within the scope of our authority and are a reasonable and necessary exercise of our statutory obligations.

II. Executive Summary

The notice of proposed rulemaking (NPRM) published on August 31, 2009, (74 FR 44779) included 16 proposed changes to the FAA's existing pilot, flight instructor, and pilot school certification regulations. Of the proposed rule changes, proposal 2, which would require proficiency checks for PICs of single-piloted turbojet-powered aircraft, and proposal 3, which would permit application for an instrument rating concurrently with a private pilot certificate, raised the largest response by commenters. Upon review of the comments, the FAA has concluded that the rule requiring proficiency checks for single-piloted turbojet-powered aircraft was not well suited to experimental turbojet-powered aircraft and had the potential to add significant expense for the pilots of those aircraft. The final rule allows alternative methods of compliance for pilots of experimental jets that possess more than a single seat. It excludes from the proficiency check requirement those pilots of experimental jets that possess more than a single seat who do not carry passengers and those pilots of experimental jets that possess a single seat. The FAA has also modified the rule permitting concurrent application for a private pilot certificate and instrument rating because the rule as proposed in the original NPRM failed to recognize that the prerequisite of 50 hours of cross-country time for the instrument rating could not easily be met by a student pilot. The FAA has added a provision to § 61.65 to accommodate an alternative method of compliance with that requirement.

Finally, the NPRM proposed to replace the 10 hours of training in a complex airplane required for pilots applying for a commercial pilot certificate with 10 hours of advanced instrument training. These proposals would have resulted in changes to both Part 61 and Part 141. However, in response to the public comments received and in light of the recently passed Airline Safety and Federal Aviation Administration Extension Act of 2010 (Pub. L. 111–2163) that addresses flight crewmember training, the FAA has elected not to adopt these proposals.

III. Background

A. Summary of the NPRM

The following proposals were contained in the NPRM.

Proposal No.	CFR designation	Summary of the proposed changes
1	§ 61.1(b)(3)	Proposal to revise the definition of "complex airplane" to include airplanes equipped with a full authority digital engine control (FADEC) and move it from § 61.31(e) to § 61.1(b)(3).
2	§ 61.58(a)(1) & (2) and (d)(1)–(4)	Proposal to require a § 61.58 PIC proficiency check for PICs of single piloted, turbojet-powered airplanes.
3	§ 61.65(a)(1)	Proposal to permit the application for and the issuance of an instrument rating concurrently with a private pilot certificate for pilots.
4	§ 61.71(c)	Proposal to allow the conversion of a foreign pilot license to a U.S. pilot certificate based on an Implementation Procedures for Licensing (IPL) agreement.
5	§ 61.129(a)(3)(ii)	Commercial pilot certificate, airplane single engine class rating—Proposal to replace the 10 hours of complex airplane aeronautical experience with 10 hours of advanced instrument training.
6	§ 61.129(b)(3)(ii)	Commercial pilot certificate, airplane multiengine class rating—Proposal to replace the 10 hours of complex multiengine airplane aeronautical experience with 10 hours of advanced instrument training.
7	§ 91.109(a) and (b)(3)	Proposal to expand the use of airplanes with a single, functioning throwover control wheel for providing expanded flight training. This proposal parallels the long standing grants of exemptions that the FAA has issued to many petitioners for use with certain airplanes with a single, functioning throwover control wheel.
8	§ 141.45	Proposal to allow pilot schools and provisional pilot schools an exception to the requirement to have a ground training facility when the training course is an online, computer-based training program.
9	§ 141.55(c)(1)	Proposal to allow pilot schools and provisional pilot schools an exception to the requirement to describe each room used for ground training when the training course is an online, computer-based training program.
10	Part 141, Appx. D, para. 4.(b)(1)(ii)	Commercial pilot certification course for an airplane single engine class rating—Proposal to replace the 10 hours of complex airplane training with 10 hours of advanced instrument training.
11	Part 141, Appx. D, para. 4.(b)(2)(ii)	Commercial pilot certification course for an airplane multiengine class rating—Proposal to replace the 10 hours of complex multiengine airplane training with 10 hours of advanced instrument training.

Proposal No.	CFR designation	Summary of the proposed changes
12	Part 141, Appx. I, para. 4.(a)(3)(ii)	Additional airplane single engine class rating at the commercial pilot certification level—Proposal to replace the 10 hours of complex airplane training with 10 hours of advanced instrument training.
13	Part 141, Appx. I, para. 4.(b)(2)(ii)	Additional airplane multiengine class rating at the commercial pilot certification level—Proposal to replace the 10 hours of complex multiengine airplane training with 10 hours of advanced instrument training.
14	Part 141, Appx. I, para. 4.(j)(2)(ii)	Additional airplane single engine class rating at the commercial pilot certification level—Proposal to replace the 10 hours of complex airplane training with 10 hours of advanced instrument training.
15	Part 141, Appx. I, para. 4.(k)(2)(ii)	Additional airplane multiengine class rating at the commercial pilot certification level—Proposal to replace the 10 hours of complex multiengine airplane training with 10 hours of advanced instrument training.
16	Part 141, Appx. M	Proposal to establish a combined private pilot certification and instrument rating course.

The public comment period closed on November 30, 2009.

B. Summary of Comments

The FAA received 441 comments on the NPRM. Commenters consisted of aviation industry associations, flight schools, flight instructors, and pilots. Most commenters expressed multiple opinions, concerns, and suggestions, which were often repeated by others. Common areas of concern are grouped by subject for response.

C. Changes From the NPRM to the Final Rule

The single most significant change from the original proposal relates to § 61.58, which will require a PIC of a turbojet-powered aircraft to receive an annual pilot proficiency check. As proposed in the NPRM, those pilots who operated experimental jets would have incurred the most significant costs; however, those costs were inadvertently not included in the initial cost analysis. The language as proposed would have required annual checks in virtually every experimental jet for which the pilot held an authorization to operate if the pilot intended to serve as PIC in that aircraft. Because of the inherent nature of operating historic turbojet-powered aircraft, this would have entailed, in some cases, debilitating expenses for the pilot(s). Therefore, we have modified the rule by adding a paragraph to § 61.58 to exclude from the proficiency check requirement those pilots of experimental jets that, by original design, possess only a single seat because those aircraft cannot carry passengers. Existing limitations to the operation of those aircraft adequately address any other potential safety issues. Another provision, also not proposed in the NPRM, was added to § 61.58(d) to accommodate pilots of experimental jets that, by original design or through modification, possess more than a single seat. Pilots of those aircraft who wish to carry passengers may use any single § 61.58 proficiency check or equivalent check taken in another turbojet-powered aircraft to exercise the PIC privileges for all experimental jet aircraft for which the pilot holds an authorization. This § 61.58 proficiency check or equivalent must have been accomplished in the prior 12 months. The requirement for experimental jet pilots of multi-seat aircraft to receive annual proficiency checks is based on the carriage of passengers on those aircraft. Another provision was added to accommodate pilots of multi-seat experimental jet aircraft who have not received a proficiency check within the prior 12 months. These pilots may continue to operate those experimental jet aircraft in accordance with their authorizations; however, they are prohibited from carriage of any passengers other than authorized designees, instructors, or FAA personnel until such time as they successfully complete the proficiency check.

This final rule amends § 61.65(a)(1) to allow a student pilot to train concurrently for both the private pilot certificate and instrument rating. The amendment as proposed in the NPRM had a potential for decreasing safety and adding unnecessary economic burden to pilots engaged in a combined course because it would have required a student pilot to obtain 50 hours of cross-country flight time as PIC through a series of endorsements for solo flights. The FAA has added a new paragraph (g) to § 61.65 to allow an applicant for a combined private pilot certificate with instrument rating to credit cross-country time performing the duties of pilot in command, when accompanied by an instructor to satisfy a majority of the cross-country PIC time required by § 61.65(d)(1), (e)(1) and (f)(1). A similar privilege already exists under § 61.129(b)(4). The intent is to limit this credit to no more than the 45 hours of cross-country PIC time remaining after the student pilot has completed the 5 hours of solo cross-country flight time required by §§ 61.109(a)(5)(i) for a single engine rating, 61.109(b)(5)(i) for a multiengine rating, and 61.109(e)(5)(i) for a powered-lift rating. For a private pilot helicopter rating, the credit for cross-country time as PIC is limited to the 47 hours of cross-country PIC time remaining after completion of the 3 hours of solo cross-country flight time required by § 61.109(c)(4)(i). Any credit allowed under this rule is limited to those students enrolled in a combined private pilot instrument rating course of training that culminates in a combined practical test. If at the conclusion of a program of combined training under this rule, the student instead elects to take only the private pilot practical test, then any solo cross-country time accrued while accompanied by an instructor prior to the completion of the private pilot practical test will not be creditable as solo PIC time.

The FAA will not adopt the proposed amendments to replace the 10 hours of complex aeronautical experience with 10 hours of advanced instrument training for commercial pilot applicants as required by § 61.129 and Part 141, Appendices D and I. A complete discussion of this issue is included in this final rule under ''IV. Discussion of the Final Rule, C. Replace Complex Airplane Aeronautical Experience with Advanced Instrument Training.''

IV. Discussion of the Final Rule

A. Recurrent Proficiency Check for a Pilot in Command of a Single-Piloted Turbojet-Powered Aircraft

This rule extends the requirement for recurrent proficiency checks to pilots operating single-piloted turbojet-powered aircraft.

This proposal garnered a significant number of comments. The overwhelming majority opposed the proposed rule as written. None of the commenters expressed resistance to the

imposition of an annual proficiency check for standard category, single-piloted turbojet-powered aircraft. Some expressed the opinion that this proposal was appropriate for the Very Light Jet (VLJ) community. Their concern focused exclusively on the effect that such a rule, as proposed, would have on the owners and pilots of experimental jets which are not type certificated aircraft.

Commenters expressed concern in two principal areas related to experimental jets. First, they cited the prohibitive costs of the annual checks in each of the experimental jets that they are authorized to operate—estimates for which ranged from $10,000 to more than $50,000 per year. A number of commenters stated they would no longer be able to operate due to the costs. Many commented that the FAA had not adequately examined the anticipated cost to owners of experimental jets before proposing this rule. The second issue that commenters expressed concern over was the extremely limited availability of Experimental Aircraft Examiners (EAE) to conduct the required tests. Currently, the FAA has authorized nine EAEs that are qualified in experimental jets. With the limited pool of EAEs, many commenters stated that it would be physically impossible to provide the number of annual proficiency checks that would be required.

A small subset of those commenting on this proposed rule change expressed approval for the proposal as applied to the VLJ community. They stated that it would be appropriate because single-pilot operations are more demanding since such pilots do not have a co-pilot to share the workload and, thus, should be checked annually for competency.

Some commenters asked us to clarify the requirements for a § 61.58 proficiency check for single-pilot operations in standard category aircraft. Specifically, they wanted to know whether existing annual training requirements required by most insurance companies would qualify. The FAA believes that annual training required by insurance companies will culminate in a proficiency check which will satisfy the requirement for a § 61.58 proficiency check if conducted in accordance with this section, § 61.58.

One commenter requested that, in addition to the changes already proposed, the FAA further amend § 61.58 to allow the check to serve as an acceptable means of completing the instrument proficiency check under § 61.57(d) if conducted in an airplane certified for instrument flight rules (IFR) flight and given to the pilot holding a type rating that does not contain the visual flight rules (VFR) limitation ''VFR ONLY.'' We recognize that in many cases a § 61.58 check may meet the requirements of a § 61.57(d) check. If it does so, then the authorized official may so endorse the pilot's training and currency record. However, in many cases, a § 61.58 check may not cover everything required for a § 61.57(d) check and therefore would not qualify for one. The individual providing the check must make that distinction. It is the pilot's responsibility to ensure that he or she remains in regulatory compliance. The FAA does not believe it is necessary to amend § 61.58 as suggested by the commenter.

Finally, one commenter suggested that the PIC proficiency check for pilots of single-piloted turbojet-powered airplanes should be applicable only to those who are using the aircraft for hire. Commercial pilots of these aircraft may carry passengers or conduct other operations for hire under certain conditions and rules. Any pilot at the private or higher level may carry non-paying passengers on not-for-hire flights. Their responsibility for the safety of their passengers and their environment is no less than if they operated for hire. Therefore, the FAA does not see any safety benefit in limiting the proficiency checks to for-hire operations.

The FAA has concluded, upon analysis of the comments, that the proposed revision to § 61.58 cannot work for the experimental jet community for several reasons. The experimental jet fleet is not standardized; even among the same make and model virtually no two are identical although they frequently share similar handling characteristics. Full compliance with the rule as proposed would require a proficiency check in each individual aircraft (not just make and model) for which the pilot holds a letter of authorization. The costs incurred for proficiency checks in experimental jets are extremely high due to the unique historic value and technology of the aircraft. For example, the majority of these aircraft are historic military jets that employ outdated technology that requires high levels of specialized maintenance making them expensive to operate. In addition, the vintage jet engines in most of these aircraft typically are inefficient in fuel use as opposed to modern jet engines resulting in additional expenses in their operation.

The FAA believes that the operation of experimental jet aircraft does not represent a significant hazard in the United States. There are a limited number of aircraft in the experimental jet fleet (just over 1,200). Experimental jets are limited in both time and activity when measured against standard category turbojet aircraft. Under current regulations and policies, experimental jets are limited to demonstration and exhibition flights only and are not permitted to fly over populated areas. *See* § 91.319; Flight Standards Information Management System [FSIMS], Order 8900.1, Volume 5, Chapter 9, Section 2. The relatively high operating costs of these aircraft compared to those of standard category aircraft limits their operation even further. This combination of low numbers of aircraft, high operational costs, and strict existing regulatory policies limits their exposure to risk significantly. Further, unlike most standard category turbojet aircraft, there are no alternatives to conducting proficiency check flights in an airplane because there are presently no approved simulators for the fleet of experimental jets. Finally, there are an inadequate number of qualified experimental jet check pilots to conduct the number of annual checks that would be necessary under the proposed rule.

Notwithstanding these considerations, the FAA firmly believes that pilots conducting flight in turbojet-powered experimental aircraft with more than one seat, who wish to carry a passenger, must receive annual proficiency checks to ensure their continued understanding of the unique operating characteristics common to turbojet-powered aircraft.

An experimental jet aircraft that by original design or through modification possesses more than a single seat, has the potential to carry one or more passengers. In such a case, the pilot will be directly responsible for those passengers. We believe these circumstances demand a higher level of confirmation of the pilot's ability to operate safely in a turbojet- powered aircraft. For the reasons outlined previously, however, the FAA believes it is impractical to implement § 61.58 as published in the NPRM. Therefore, for the purpose of meeting the regulatory intent of the proposed rule as applied to the pilots of experimental jets, the FAA will accept any of the following as an alternative to requiring a proficiency check in any multi-seat experimental jet for which the pilot holds an authorization:

1. A single proficiency check by an EAE in any one of the experimental jet aircraft for which the airman holds an authorization to operate if conducted within the prior 12 months;

2. A single proficiency check by an EAE in any experimental jet (*e.g.,* if a

pilot acquires a new authorization to operate an additional experimental jet aircraft, the check for that new authorization will meet the intent), if conducted within the prior 12 months;

3. Maintaining qualification under an Advanced Qualification Program (AQP) under Subpart Y of part 121;

4. Any pilot proficiency check given in accordance with subpart K of part 91, parts 121, 125, or 135 conducted within the prior 12 months if conducted in a turbojet-powered aircraft;

5. Any other § 61.58 proficiency check conducted within the prior 12 months if conducted in a turbojet-powered aircraft.

Any one of the listed checks will apply to the PIC privileges for all of the experimental jets for which the pilot holds an authorization for a given 12-month period.

A pilot of a multi-seat turbojet experimental jet aircraft who has not received a proficiency check within the prior 12 months as outlined here may continue to operate such aircraft in accordance with the pilot's authorizations. However, the pilot is prohibited from carriage of any persons in any turbojet-powered experimental jet aircraft with the exception of individuals authorized by the Administrator to conduct training, flight checks, or perform pilot certification functions in such aircraft during flights specifically related to training, flight checks, or certification.

The FAA has determined that those experimental jet aircraft that have only a single seat do not pose a risk to the public due to the strict constraints placed on the pilot's authorizations and the aircraft's inherent inability to transport anyone other than the pilot. Therefore, this section will not apply to those pilots of experimental jet aircraft that, through original design, possess only a single seat.

For the reasons stated, this final rule adopts § 61.58 with modifications to accommodate pilots of experimental jets.

B. Application for and Issuance of an Instrument Rating Concurrently With a Private Pilot Certificate

In the NPRM, the FAA proposed to revise § 61.65(a) to permit the application for an instrument rating concurrently with a private pilot certificate. Several commenters expressed concern that the proposal would result in a reduction in the experience that would otherwise be gained when a pilot completes the private pilot certificate first and then returns later for the instrument rating. This concern arose because § 61.65(d)(1), (e)(1), and (f)(1) require, as a prerequisite to application for an instrument rating, that the pilot have acquired 50 hours of cross-country pilot-in-command (PIC) time for single-engine, multiengine, or powered-lift aircraft, respectively. Commenters believed that, if the rule were published as proposed, the cross-country requirements would be eliminated. This perception was inaccurate. However, upon further analysis, the FAA recognized that those specific requirements had not been fully addressed in the NPRM. As proposed in the NPRM, it would be possible, although difficult, for the pilot concurrently training for the private pilot certificate and instrument rating to acquire the required PIC cross-country time because the pilot would hold only a student pilot certificate. In such cases, the student pilot could acquire the requisite 50 hours of PIC cross-country time only through a series of individually endorsed solo flights. Under current regulations, student pilots may log PIC time only when flying solo as the sole occupant of the aircraft and are not permitted to carry passengers. *See* 14 CFR 61.89. Currently, under § 61.109(a)(5)(i) (single engine), § 61.109(b)(5)(i) (multiengine), and § 61.109(e)(5)(i) (powered-lift), a student pilot seeking private pilot certification is required to complete 5 hours of solo cross-country flight. Under § 61.109(c)(4)(i) a student pilot is required to complete 3 hours for the helicopter rating. These hours qualify as PIC time since the student pilot is the sole occupant of the aircraft. The original intent of § 61.65(d)(1), (e)(1), and (f)(1) was to have the pilot develop a basis of experience as a certificated pilot prior to pursuing the instrument rating. Requiring a student pilot to complete an additional 45 hours (47 hours for the helicopter rating) of cross-country solo flight would not be in the best interest of safety. The additional hours of cross-country solo flight would also impose significant additional costs on the pilot.

The FAA recognizes the value of the experience gained during cross-country flight and does not intend to eliminate the 50-hour requirement. We also recognize that requiring the pilot to acquire 50 hours of cross-country flight time under a series of student-pilot solo endorsements would not enhance safety and would largely negate the purpose of this combined training. Therefore, although not proposed in the NPRM, a new paragraph (g) has been added to § 61.65 to allow the pilot seeking combined private pilot certification and an instrument rating to credit up to 45 hours (47 hours for the helicopter rating) of the required 50 hours of cross-country flight time as PIC when the student pilot is performing the duties of pilot in command while accompanied by an instructor. This provision is similar to the privilege already offered under § 61.129(b)(4).

The 5 hours of solo flight, as the sole occupant of the aircraft, required under § 61.109(a)(5)(i) (single-engine), § 61.109(b)(5)(i) (multiengine), and § 61.109(e)(5)(i) (powered-lift), or 3 hours of solo flight required under § 61.109(c)(5)(i) (helicopter) must still be met. The student pilot may log cross-country PIC time toward the balance of the 50-hour requirement if the training is conducted during cross-country flight with an instructor on board the aircraft. This provision applies only to training conducted for a combined private pilot certificate and instrument rating. The credit for cross-country PIC time when accompanied by an instructor is limited to 45 hours (47 hours for the helicopter rating) of the required 50 hours of cross-country PIC time.

The FAA has determined that this allowance will result in a better prepared and more competent private pilot with an instrument rating at the conclusion of the combined training. A significant portion of the combined training will, of necessity, have been conducted during cross-country flight, which represents an environment more representative of the environment in which the pilot can be expected to operate upon completion of their training. In addition, this cross-country flight time will be more useful to the pilot than an equivalent number of hours of solo flight. The pilot will be directly under the supervision of an instructor who, presumably, will better ensure that correct habits are firmly established.

Because there was no proposed requirement for 50 hours of cross-country PIC time for an instrument rating under Appendix M to part 141, this final rule adopts Appendix M to part 141 as proposed in the NPRM with minor editorial changes. The FAA anticipates, however, that any approved training program under part 141 will include cross-country flight time as pilot in command due to the value of such aeronautical experience.

C. Replace Complex Airplane Aeronautical Experience With Advanced Instrument Training

The NPRM proposed to replace the requirement for 10 hours of training in a complex airplane with 10 hours of advanced instrument training for pilots

who apply for the commercial pilot certificate. Accordingly, the FAA proposed to amend §§ 61.129(a)(3)(ii), 61.129(b)(3)(ii), Appendix D to part 141 paragraphs 4.(b)(1)(ii), 4.(b)(2)(ii); Appendix I to part 141 paragraphs 4.(a)(3)(ii), 4.(b)(2)(ii), 4.(j)(2)(ii), and 4.(k)(2)(ii). The FAA has elected not to adopt these proposed amendments.

The FAA received a wide variety of comments on this set of regulatory amendments, with approximately half of the comments in favor of implementing the changes. Some in favor of the proposals felt that maintaining and operating complex aircraft was too costly, placing burden on flight training providers and those seeking a commercial pilot certificate. Another portion of supporters felt that advanced instrument experience would be more valuable than the current complex training requirement because the additional instrument time would better prepare airmen for employment as commercial pilots. One commenter expressed belief that complex training should only be required prior to operating a complex aircraft and the current regulation requiring a complex endorsement is sufficient. Although the advanced instrument training need not have been conducted in a technologically advanced aircraft, some commenters offered that these proposals are appropriate given the technological advancements in aircraft avionics.

The remaining comments were either against adopting all provisions of proposed changes or suggested that only a portion of the proposed changes should be implemented. A number of commenters were opposed to the removal of the 10 hours of complex training citing the potential for an increase in gear up landing incidences. Some commenters felt that the experience gained operating complex aircraft is essential for safety since commercial pilots may encounter complex aircraft in their career. One commenter suggested that a minimum number of complex training hours be required for a complex endorsement instead of requiring complex training for a commercial pilot applicant. Other commenters felt that the requirement of advanced instrument training would be redundant and would present unnecessary cost for those individuals who already hold an instrument rating. Further, those commercial pilots who do not have an instrument rating are already limited in privilege by existing regulations. One commenter urged the FAA to consider the differences between those aircraft that are mechanically complex and those aircraft that are electronically complex in amendments to the regulations.

The recent enactment of the Airline Safety and Federal Aviation Administration Extension Act of 2010 also influenced the FAA's decision not to adopt the proposals affecting commercial pilot requirements. Section 208 of this law directs the FAA to ''conduct rulemaking proceedings to require part 121 air carriers to provide flight crew members with ground training and flight training or flight simulator training…to recognize and avoid the stall of an aircraft or, if not avoided, to recover from the stall' and 'to recognize and avoid an upset of an aircraft or, if not avoided, to execute such techniques as available data indicate are appropriate to recover from the upset.'' Although this section specifically addresses training for crewmembers operating in the air carrier environment, the FAA believes that conforming changes to the commercial pilot requirements may be prudent and necessary in the near future.

The FAA finds validity in the points raised through the public comments. Additional time is necessary to analyze changes to the regulations that were the subject of these proposals. The FAA also feels compelled to review the commercial pilot certification regulations alongside the requirements of Public Law 111–216. Therefore, the FAA will not adopt the proposed amendments that replace the 10 hours of complex training with the 10 hours of advanced instrument training. The FAA intends to devote additional consideration to the commercial pilot requirements and may publish a future notice of proposed rulemaking to amend these regulations.

D. Conversion of a Foreign Pilot License to a U.S. Pilot Certificate

This final rule amends the FAA's regulations concerning pilot licenses to allow the conversion of a foreign pilot license to a U.S. certificate under the provisions of a Bilateral Aviation Safety Agreement (BASA) and Implementing Procedures for Licensing (IPL).

On June 12, 2000, the United States and Transport Canada Civil Aviation (TCCA) signed a BASA that permits a pilot holding certain pilot licenses or certificates from either country to obtain a pilot license or certificate from the other county after the pilot applicant has met the appropriate qualifications and certification requirements. Before executing an IPL, the BASA process requires the FAA and a foreign civil aviation authority to first evaluate each other's pilot licensing standards and procedures and compare them to their own to determine what, if any, additional requirements would be necessary to assure that the pilot is in compliance with their own standards. The FAA and TCCA completed the conformity analysis and executed an IPL on July 14, 2006, that establishes the procedures each country must follow to achieve the objectives of the BASA. The FAA–Canada IPL allows holders of FAA pilot certificates and TCCA pilot licenses to convert to Canadian pilot licenses and U.S. pilot certificates, respectively. The IPL currently is limited to the airplane category of aircraft at the private, commercial, and airline transport pilot levels of licenses or certificates. The IPL includes the following ratings or qualifications: instrument rating, class ratings of airplane single-engine land (ASEL) and airplane multiengine (AMEL), type ratings, and night qualification addressed under part 61 and Canadian Aviation Regulations Part IV. The FAA and TCCA have agreed that they may amend the IPL to allow conversion of other licenses or certificates in the future.

The amendment to § 61.71(c) would not only provide the legal basis for expansion of the FAA–TCCA BASA/IPL, but would also allow similar BASA/IPL arrangements with other ICAO Contracting States, as determined by the Administrator in the interest of safety. Therefore, the FAA revises § 61.71 to allow holders of foreign pilot licenses to convert to U.S. pilot certificates where the U.S. Government and the foreign government have concluded a BASA and associated IPL. The issuance of a U.S. private pilot certificate and ratings under § 61.75 is a separate pilot certification process, as is the process described in § 61.153.

A majority of the commenters approved of this proposal. However, several commenters suggested that holders of foreign pilot certificates receive inferior training and were not up to the standards of pilots trained in the United States. One commenter asked for assurance that any country that the United States entered into a BASA with would allow conversion of a U.S. pilot certificate to a foreign pilot license in that country. Finally, one organization expressed concern that there would be lack of oversight of the foreign pilot training program and that the influx of foreign IPL certificate holders would erode the wages, benefits, and working conditions of U.S. airline pilots, and would have a detrimental effect on U.S. flight schools.

As discussed above, the FAA has fully considered these issues. The FAA

believes that countries which enter into BASA with the United States will fully meet both the mutually agreed upon U.S. and International Civil Aviation Organization (ICAO) standards, and that such agreements are reciprocal. Oversight of the foreign flight training facilities has and will continue to be the responsibility of the ICAO affiliate nations. Additionally, the FAA does not anticipate such agreements will interfere with the ability of U.S. flight schools to conduct business and may, in fact, enhance their success. For many years, foreign students have come to the United States to receive both primary and advanced flight training, largely for economic reasons. In light of these considerations, entering into BASA with other ICAO contracting states will encourage pilots from those countries to seek more economical training because their U.S. certificates may be converted to a license issued by their national licensing authority.

This final rule adopts 61.71(c) as proposed in the NPRM with one editorial change to include a reference to the bilateral agreement which is the basis for entering into an IPL with an ICAO Contracting State.

E. Proposal To Revise the Definition of ''Complex Airplane''

In the NPRM, the FAA proposed to revise the definition of ''complex'' airplane to include airplanes equipped with a full authority digital engine control (FADEC) and move the definition from § 61.31(e) to § 61.1(b)(3).

The majority of commenters supported this rule. Those who disapproved were consistent in their concern that this proposal was over-simplifying the practical test for the commercial pilot certificate. They expressed concern that the complex aircraft, with propeller and other thrust controls, still existed and that ''professional pilots'' should be able to operate those aircraft. The FAA recognizes that the technology is changing and that FADEC aircraft are growing in availability. The FAA also recognizes that professional pilots may never encounter the type of controls that FADEC aircraft replace. This is particularly true for those who transition directly from flight academies to the airlines. This proposal simply reflects the changing duties and activities of a professional pilot.

Several commenters misunderstood an important aspect of the proposal and expressed concern that the proposal would require use of a FADEC-equipped airplane for complex training, supplanting the more conventionally-equipped light training airplane. This is not the case. Those aircraft that were previously defined as complex will continue to qualify for any application where a complex aircraft is required. This amendment simply adds the option to use a FADEC-equipped airplane with retractable landing gear and flaps for complex airplane training if the pilot chooses to do so.

This final rule adopts §§ 61.31(e) and 61.1(b) as proposed in the NPRM with clarifying changes as related to the definition of complex seaplanes.

F. Expanded Use of Airplane With a Single Functioning Throwover Control Wheel for Certain Kinds of Flight Training

The amendment to § 91.109 permits the use of a functioning throwover control wheel for certain flight training that includes the flight review required by § 61.56, and the recent flight experience and instrument proficiency check required by § 61.57.

Several commenters expressed concern over the lack of instructor control during the training. The fact that the FAA has been issuing exemptions to allow the use of a functioning throwover control wheel for flight training for many years has provided demonstrated evidence of the safety of such operations. This amendment will eliminate the need for future exemptions for this purpose.

One commenter who opposed the proposal stated that it was unnecessary because it applied to a limited, aging fleet. The commenter indicated that the current practice of issuing exemptions to allow for the use of such aircraft for flight training is adequate. The purpose of the amendment is to eliminate the need to issue exemptions for a practice that has a proven record of safety. The fact that this rule will be applicable only to a limited fleet is not relevant.

One commenter described the discrepancy over the wording in the NPRM, expressing that the description of the rule change did not coincide with the verbiage in the proposed regulation. Upon review, the FAA found validity in this comment. The NPRM indicates that the amendments to this rule aim to parallel certain exemptions that have been issued in the past for § 91.109 (a) and (b). The final rule has been modified to increase clarity in this regard.

Another commenter expressed concern about obtaining the recent flight experience required by § 61.57. The commenter believed that permitting the use of a throwover control wheel for § 61.57 did not make sense because a pilot not already meeting the recency requirements of that section cannot legally act as PIC when a certified flight instructor (CFI) is on board. The commenter is partially correct in stating that a pilot whose recency has lapsed under § 61.57 may not complete the requirements of § 61.57 in an airplane equipped with a throwover control wheel because the pilot may not act as PIC. The commenter's assertion is true if the airman had allowed a lapse in the takeoff and landing experience requirements dictated by § 61.57 (a) and (b). An airman would, however, be allowed to obtain flight instruction to acquire takeoffs and landings prior to such a lapse in these experience requirements. The key concept in this example is whether the airman is able to act as PIC and therefore meet the requirement stipulated by § 91.109 (b)(2).

That same commenter expressed concern over the language in § 91.109 that requires a flight instructor in an airplane with only a single functioning throwover control wheel to ''have logged at least 25 hours of pilot in command flight time'' in the make and model of airplane with a single functioning throwover control wheel involved in the instruction. The commenter stated that the language could be interpreted to require that the 25 hours must be flown with a single wheel and throwover yoke. The commenter's interpretation was correct; however, upon further review the FAA has concluded that this requirement is unnecessarily burdensome. The requirement in the final rule will not demand that the instructor have logged 25 hours of PIC flight time in a make and model of an aircraft that was obtained in aircraft having a throwover control wheel. The intent of the 25 hours in make and model that remains in the final rule is to ensure that the instructor has the proficiency and skill in that type of aircraft to safely provide instruction without the benefit of direct elevator and aileron control.

There was also confusion expressed over whether the 25 hours must be as acting PIC, or as logged PIC time, *e.g.,* as the sole manipulator or CFI providing dual instruction. The answer is yes to all. If the CFI's flight history involved PIC time logged as a student, a pilot, and/or a CFI in an aircraft that is of the particular make and model involved, then that time may be applied to the 25-hour requirement. The FAA received a similar comment expressing a request that ''model'' be defined as ''all versions of a manufacturer's type or series in the same class of aircraft.'' As stated previously, the 25-hour requirement is in place to ensure that the instructor has the proficiency and skill in that type of

aircraft to safely provide instruction. Therefore, the 25-hour requirement in the particular make and model of airplane will remain in the final rule.

Based on the established safety record of these operations, the FAA adopts § 91.109(a) and (b)(3) as proposed in the NPRM with the changes described above.

G. Exception to Requirement for Ground Training Facility When Training Is an Online Computer-Based Training Program

In the NPRM, the FAA proposed to except pilot schools and provisional pilot schools from the requirement to describe each room used for ground training when the training course is an online computer-based training program.

The responses to this proposal were overwhelmingly favorable. A few commenters expressed concern over the lack of personal interaction between the instructor and the student when receiving knowledge training over the internet.

The FAA fully understands the concerns that distance learning seems counterintuitive. However, for many years, knowledge training under 14 CFR part 61 has been conducted successfully via remote learning through the internet or home video, or even with books alone. Additionally, colleges and universities have embraced distance learning and have found such training to be highly effective for multiple degree programs. Nevertheless, an endeavor such as flight training must include personal, one-on-one training with a flight instructor. Naturally, all actual flight training will involve such direct interaction. The flight training will reinforce the academic knowledge training that the student receives. Many schools already divide the one-on-one flight training portion of the student's learning experience from the ground-based classroom training, with different instructors serving each capacity. This has proven to be very effective. Any training that would be allowed in any online computer-based training program under 14 CFR part 141 will be reviewed, approved, and overseen by the FAA. Distance learning has been available to students training under 14 CFR part 61 for many years. This amendment, with additional oversight, simply extends distance learning to schools operating under 14 CFR part 141.

Upon further review, it was found that some of the proposed text presented in the NPRM pertained to existing regulations found in Part 141, and therefore these portions have been moved to other sections of this Part or removed. In addition, minor editorial changes have been made for consistency with current regulations or to reflect current practice.

This final rule adopts §§ 141.45 and 141.55(c)(1) as proposed in the NPRM with clarifying changes described above.

H. Conforming Amendments

Since this rule amends § 61.1, the rule includes conforming amendments to § 142.3 to make it consistent with the amendment to § 61.1.

Miscellaneous Issues

One organization submitted recommendations regarding the duration, renewal, and reinstatement requirements of flight instructor certificates. The arguments presented were cogent, thoroughly developed, and offered insightful observations. However, the FAA believes that pursuing that regulatory path is beyond the scope of this rulemaking effort and will not address those issues at this time.

V. Regulatory Notices and Analyses

Paperwork Reduction Act

Information collection requirements associated with this final rule have been approved previously by the Office of Management and Budget (OMB) under the provisions of the Paperwork Reduction Act of 1995 (44 U.S.C. 3507(d)), and have been assigned OMB Control Numbers 2120–0021 and 2120–0009.

An agency may not collect or sponsor the collection of information, nor may it impose an information collection requirement unless it displays a currently valid Office of Management and Budget (OMB) control number.

International Compatibility

In keeping with U.S. obligations under the Convention on International Civil Aviation, it is FAA policy to conform to International Civil Aviation Organization (ICAO) Standards and Recommended Practices to the maximum extent practicable. The FAA has reviewed the corresponding ICAO Standards and Recommended Practices and has identified no differences with these regulations.

Regulatory Evaluation, Regulatory Flexibility Determination, International Trade Impact Assessment, and Unfunded Mandates Assessment

Changes to Federal regulations must undergo several economic analyses. First, Executive Order 12866 directs that each Federal agency shall propose or adopt a regulation only upon a reasoned determination that the benefits of the intended regulation justify its costs. Second, the Regulatory Flexibility Act of 1980 (Pub. L. 96–354) requires agencies to analyze the economic impact of regulatory changes on small entities. Third, the Trade Agreements Act (Pub. L. 96–39) prohibits agencies from setting standards that create unnecessary obstacles to the foreign commerce of the United States. In developing U.S. standards, this Trade Act requires agencies to consider international standards and, where appropriate, that they be the basis of U.S. standards. Fourth, the Unfunded Mandates Reform Act of 1995 (Pub. L. 104–4) requires agencies to prepare a written assessment of the costs, benefits, and other effects of proposed or final rules that include a Federal mandate likely to result in the expenditure by State, local, or tribal governments, in the aggregate, or by the private sector, of $100 million or more annually (adjusted for inflation with base year of 1995). This portion of the preamble summarizes the FAA's analysis of the economic impacts of this final rule. Readers seeking greater detail should read the full regulatory evaluation, a copy of which we have placed in the docket for this rulemaking.

In conducting these analyses, the FAA has determined that this final rule: (1) Has benefits that justify its costs, (2) is not an economically ''significant regulatory action'' as defined in section 3(f) of Executive Order 12866, (3) is ''significant'' as defined in DOT's Regulatory Policies and Procedures; (4) will have a significant economic impact on a substantial number of small entities; (5) will not create unnecessary obstacles to the foreign commerce of the United States; and (6) will not impose an unfunded mandate on state, local, or tribal governments, or on the private sector by exceeding the threshold identified above. These analyses are summarized below.

Total Benefits and Costs of This Rule

Over 10 years (2011 through 2020), the estimated total costs sum to $38.4 million with $1.8 million of cost savings for a net cost of approximately $36.6 million ($25.3 million discounted by 7% and $31.0 million discounted by 3%). Total estimated benefits over the 10 years are approximately $96.5 million ($66.7 million discounted by 7% and $81.8 million discounted by 3%).

Who is potentially affected by this rule?

- Pilots who act as pilot in command of single-piloted turbojet-powered aircraft;

• Pilot Examiners who give proficiency checks in these aircraft;
• Corporations that own these aircraft;
• Applicants for private pilot certificates who may opt to apply for a combined private pilot certificate with instrument rating;
• Holders of foreign pilot licenses;
• Operators of aircraft with throwover control wheels;
• Providers of internet-based training under part 141; and
• Operators of complex aircraft.

Assumptions:

Estimates are in 2010 Dollars.

Discount rates—7% and 3%.

Period of analysis—2011 through 2020.

Value of a fatality avoided—$6.0 million, value of serious injury—$345,000, value of minor injury—$12,000.

Changes From the NPRM to the Final Rule

The following summarizes changes from the NPRM to the final rule that are relevant to the regulatory evaluation and differences in the final regulatory evaluation from the initial regulatory evaluation.

To mitigate the impact on experimental turbojet-powered aircraft pilots and owners, the final rule allows alternative methods of compliance for pilots of experimental jets who possess more than a single seat and excludes from the proficiency check requirement those pilots of experimental jets that possess a single seat and those who are not carrying passengers or who are carrying persons authorized by the Administrator. Pilots of experimental jets that possess more than a single seat, either by original design, or through modification, will be allowed to perform their annual proficiency checks in any turbojet-powered aircraft, and will not be required to have the check in an experimental jet, and one annual proficiency check in a turbojet-powered aircraft will suffice. Therefore, if the pilot is type rated in other turbojet-powered aircraft and is taking annual proficiency checks in these aircraft that comply with § 61.58, he or she will not need an additional check to be in compliance with the final revision to § 61.58.

However, in the NPRM regulatory evaluation, the FAA inadvertently did not include the cost of proficiency checks for pilots of experimental jets. The final rule regulatory evaluation includes those costs, but the costs are significantly less than they would have been under the more stringent requirements proposed in the NPRM.

In the NPRM, the FAA proposed replacing the commercial pilot certificate requirement for 10 hours of training in a complex airplane with 10 hours of advanced instrument training. For reasons cited previously, the FAA has elected not to adopt this proposal.

Benefits of This Rule

The quantified benefits of this rule consist of the value of fatalities, injuries and medical and legal expenses as the rule may avert more than 20 accidents if an annual proficiency check is required of pilots in command of those turbojet aircraft that are type certificated for single pilot operation and multi-seat experimental jets. The estimated safety benefits from flights in type certificated turbojets are $38.3 million; and from flights in experimental jets the estimated safety benefits are $58 million. These benefits are associated with the revisions to § 61.58.

Non-quantified benefits include:

• Less work for pilots and aviation authorities and more cooperation that are expected to result from the revision to § 61.71 which will allow the conversion of a foreign pilot license to a U.S. pilot certificate;
• Relieving part 141 schools from the requirements to have a ground training facility and to meet heating, lighting, ventilation, and location requirements for ground training space which is expected to result from the revisions to § 141.45 and § 141.55.

Costs of This Rule

Costs: Total quantifiable costs of the changes, over 10 years, sum to approximately $38.4 million, with cost savings of approximately $1.8 million for a net cost of $36.6 million ($25.3 million discounted by 7% and $31.0 million discounted by 3%).

The FAA estimated $38.4 million of costs associated with the revision to § 61.58, which extended the requirement for annual proficiency checks to pilots in command of single-piloted, turbojet-powered aircraft with an exclusion for those pilots serving as PIC in an experimental jet that possesses, by original design, a single seat and those not carrying passengers. These 10 year costs are based on:

• An estimated 3,006 proficiency checks for pilots of type certificated turbojets at an net average cost of $3,914 per check for a total cost of $11.8 million; and
• An estimated 5,880 proficiency checks for pilots of experimental jets at an net average cost of $4,529 per check for a total cost of $26.6 million.

Cost Savings: The FAA also estimated a total of $1.8 million in cost savings associated with the revisions to § 61.65 and Appendix M to Part 141. These revisions will allow the application for and issuance of an instrument rating concurrently with a private pilot certificate for pilots. Pilots are expected to save money by completing the combined course in less time and taking one exam rather than two.

Regulatory Flexibility Determination

The Regulatory Flexibility Act of 1980 (Pub. L. 96–354) (RFA) establishes ''as a principle of regulatory issuance that agencies shall endeavor, consistent with the objectives of the rule and of applicable statutes, to fit regulatory and informational requirements to the scale of the businesses, organizations, and governmental jurisdictions subject to regulation. To achieve this principle, agencies are required to solicit and consider flexible regulatory proposals and to explain the rationale for their actions to assure that such proposals are given serious consideration.'' The RFA covers a wide-range of small entities, including small businesses, not-for-profit organizations, and small governmental jurisdictions. Agencies must perform a review to determine whether a rule will have a significant economic impact on a substantial number of small entities. If the agency determines that it will, the agency must prepare a regulatory flexibility analysis as described in the RFA.

Final Regulatory Flexibility Analysis

Section 603 of the Act requires agencies to prepare and make available for public comment a final regulatory flexibility analysis (FRFA) describing the impact of final rules on small entities. Section 603 of the Act specifies the content of a FRFA. Each FRFA must contain:

• A description of the reasons why action by the agency is being considered;
• A succinct statement of the objectives of, and legal basis for, the final rule;
• A description of and, where feasible, an estimate of the number of small entities to which the rule will apply;
• A description of the projected reporting, record keeping and other compliance requirements of the final rule, including an estimate of the classes of small entities which will be subject to the requirement and the type of professional skills necessary for preparation of the report or record;
• An identification, to the extent practicable, of all relevant Federal rules which may duplicate, overlap, or conflict with the final rule; and

• Each final regulatory flexibility analysis shall also contain a description of any significant alternatives to the final rule which accomplish the stated objectives of applicable statutes and which minimize any significant economic impact of the final rule on small entities.

Reasons Why the Final Rule Is Being Promulgated

This rulemaking is being promulgated to ensure that flight crewmembers have the training and qualifications to operate aircraft safely. For this reason, the changes are within the scope of our authority and are a reasonable and necessary exercise of our statutory obligations.

Objectives and Legal Basis for the Rule

The FAA's authority to issue rules regarding aviation safety is found in Title 49 of the United States Code. Subtitle I, section 106 describes the authority of the FAA Administrator, including the authority to issue, rescind, and revise regulations. Subtitle VII, Aviation Programs, describes in more detail the scope of the agency's authority.

This rulemaking is promulgated under the authority described in Subtitle VII, Part A, Chapter 447—Safety Regulation. Under section 44701, the FAA is charged with promoting safe flight of civil aircraft in air commerce by prescribing regulations necessary for safety. Under section 44703, the FAA issues an airman certificate to an individual when we find, after investigation, that the individual is qualified for, and physically able to perform the duties related to, the position authorized by the certificate. In this final rule, we amend the training, qualification, certification, and operating requirements for pilots.

A description of the small entities the rule will apply to:

Some commenters contested the statement in the NPRM that ''pilots are not entities, so there would not be a small entity impact with regards to pilots.'' However, the Small Business Administration identifies three types of small entities: small business, small organization, and small governmental jurisdiction. Pilots are therefore not considered small entities for purposes of the regulatory flexibility analysis.

However, contrary to our statement in the NPRM, the FAA believes that this rule, by revising § 61.58, will have a significant impact on a substantial number of small entities. The revision to § 61.58 may apply to small corporations that provide air transportation in type certificated single-piloted turbojet-powered aircraft, small businesses that participate in air shows using an experimental jet and small businesses which provide training in multi-seat experimental jet aircraft under an A–115 authorization.

Other revisions that are being finalized with this rule are not expected to have a significant impact on a substantial number of small entities, as was described in the NPRM. The revision allowing foreign pilot applicants to convert their foreign pilot license to a U.S. pilot certificate will affect pilots not small entities. The revision allowing pilot schools to use online training without requiring a physical ground facility is cost relieving and might encourage more schools to provide internet-based ground training, but only if the schools believe the revenues will outweigh the costs. The revision allowing applicants for a private pilot certificate to apply for a combined private pilot certification and instrument rating is expected to be cost relieving to pilots.

Projected Reporting, Recordkeeping and Other Requirements

There are no new paperwork requirements associated with this final rule.

Overlapping, Duplicative, or Conflicting Federal Rules

The FAA has concluded that the final rule will not overlap, duplicate or conflict with existing Federal Rules.

Mitigation of Higher Cost Alternatives

The final rule is expected to have a significant impact on a substantial number of small entities. The most likely net cost for each § 61.58 proficiency check averages $3,914 for type certificated aircraft and $4,529 for experimental aircraft. These costs are expected to have a significant economic impact on operators/owners of one or two aircraft with limited revenue. The FAA however, has revised § 61.58 in the final rule relative to the NPRM by adding several cost relieving elements for experimental jet pilots. Each element can be viewed as a cost relieving alternative. One element excludes pilots who serve as pilot in command of an experimental jet with one seat by original design from the requirement to complete a proficiency check. Another element that applies to pilots of experimental aircraft will allow proficiency checks taken in any turbojet-powered aircraft, consistent with § 61.58, to fulfill the requirement. The FAA expects this to be cost relieving to about 60% of experimental jet pilots who are type rated in other turbojets and who the agency thinks are already completing proficiency checks either because of insurance requirements or employment requirements. Also, the additions to the final rule will relieve the experimental jet pilot from having to take a § 61.58 proficiency check in every experimental jet that he or she pilots: One proficiency check in a turbojet will be sufficient. Another cost relieving element in the final rule that was not in the NPRM is the addition of § 61.58(e), which allows pilots of experimental jets with more than one seat who have not taken proficiency checks to continue to pilot an experimental jet if they do not carry passengers. These provisions will substantially relieve costs of the NPRM requirements.

Although there have been changes from the NPRM to the final rule to mitigate possible costs, the rule will still have a significant economic impact on a substantial number of small entities.

International Trade Impact Assessment

The Trade Agreements Act of 1979 (Pub. L. 96–39), as amended by the Uruguay Round Agreements Act (Pub. L. 103–465), prohibits Federal agencies from establishing standards or engaging in related activities that create unnecessary obstacles to the foreign commerce of the United States. Pursuant to these Acts, the establishment of standards is not considered an unnecessary obstacle to the foreign commerce of the United States, so long as the standard has a legitimate domestic objective, such as the protection of safety, and does not operate in a manner that excludes imports that meet this objective. The statute also requires consideration of international standards and, where appropriate, that they be the basis for U.S. standards. The FAA has assessed the potential effect of this final rule and determined that it ensures the safety of the American public. As a result, this rule is not considered as creating an unnecessary obstacle to foreign commerce.

Unfunded Mandates Assessment

Title II of the Unfunded Mandates Reform Act of 1995 (Pub. L. 104–4) requires each Federal agency to prepare a written statement assessing the effects of any Federal mandate in a proposed or final agency rule that may result in an expenditure of $100 million or more (in 1995 dollars) in any one year by State, local, and tribal governments, in the aggregate, or by the private sector; such a mandate is deemed to be a ''significant regulatory action.'' The FAA currently uses an inflation-adjusted value of

$143.1 million in lieu of $100 million. This final rule does not contain such a mandate; therefore, the requirements of Title II of the Act do not apply.

Executive Order 13132, Federalism

The FAA has analyzed this final rule under the principles and criteria of Executive Order 13132, Federalism. The agency has determined that this action will not have a substantial direct effect on the States, or the relationship between the Federal Government and the States, or on the distribution of power and responsibilities among the various levels of government, and, therefore, does not have federalism implications.

Environmental Analysis

FAA Order 1050.1E identifies FAA actions that are categorically excluded from preparation of an environmental assessment or environmental impact statement under the National Environmental Policy Act in the absence of extraordinary circumstances. The FAA has determined this rulemaking action qualifies for the categorical exclusion identified in paragraph 307(k) and involves no extraordinary circumstances.

Regulations That Significantly Affect Energy Supply, Distribution, or Use

The FAA has analyzed this final rule under Executive Order 13211, Actions Concerning Regulations that Significantly Affect Energy Supply, Distribution, or Use (May 18, 2001). The FAA has determined that it is not a ''significant energy action'' under the executive order because while a ''significant regulatory action'' under DOT's Regulatory Policies and Procedures, it is not likely to have a significant adverse effect on the supply, distribution, or use of energy.

Availability of Rulemaking Documents

You can get an electronic copy of rulemaking documents using the Internet by—

1. Searching the Federal eRulemaking Portal (*http://www.regulations.gov*);
2. Visiting the FAA's Regulations and Policies Web page at *http://www.faa.gov/regulations_policies/* or
3. Accessing the Government Printing Office's Web page at *http://www.gpoaccess.gov/fr/index.html*.

You can also get a copy by sending a request to the Federal Aviation Administration, Office of Rulemaking, ARM–1, 800 Independence Avenue, SW., Washington, DC 20591, or by calling (202) 267–9680. Make sure to identify the notice, amendment, or docket number of this rulemaking.

Anyone is able to search the electronic form of all comments received into any of our dockets by the name of the individual submitting the comment (or signing the comment, if submitted on behalf of an association, business, labor union, etc.). You may review DOT's complete Privacy Act statement in the **Federal Register** published on April 11, 2000 (Volume 65, Number 70; Pages 19477–78) or you may visit *http://DocketsInfo.dot.gov*.

Small Business Regulatory Enforcement Fairness Act

The Small Business Regulatory Enforcement Fairness Act (SBREFA) of 1996 requires FAA to comply with small entity requests for information or advice about compliance with statutes and regulations within its jurisdiction. If you are a small entity and you have a question regarding this document, you may contact your local FAA official, or the person listed under the **FOR FURTHER INFORMATION CONTACT** heading at the beginning of the preamble. You can find out more about SBREFA on the Internet at *http://www.faa.gov/regulations_policies/rulemaking/sbre_act/*.

List of Subjects

14 CFR Part 61

Aircraft, Airmen, Alcohol abuse, Aviation safety, Drug abuse, Recreation and recreation areas, Reporting and recordkeeping requirements, Security measures, Teachers.

14 CFR Part 91

Afghanistan, Agriculture, Air traffic control, Aircraft, Airmen, Airports, Aviation safety, Canada, Cuba, Ethiopia, Freight, Mexico, Noise control, Political candidates, Reporting and recordkeeping requirements, Yugoslavia.

14 CFR Part 141

Airmen, Educational facilities, Reporting and recordkeeping requirements, Schools.

14 CFR Part 142

Administrative practice and procedure, Airmen, Educational facilities, Reporting and recordkeeping requirements, Schools, Teachers.

The Amendment

In consideration of the foregoing, the Federal Aviation Administration amends Chapter I of Title 14, Code of Federal Regulations as follows:

PART 61—CERTIFICATION: PILOTS AND FLIGHT INSTRUCTORS

■ 1. The authority citation for part 61 continues to read as follows:

Authority: 49 U.S.C. 106(g), 40113, 44701–44703, 44707, 44709–44711, 45102–45103, 45301–45302.

■ 2. Amend § 61.1 as follows:

■ a. Redesignating paragraphs (b)(3) through (18) as paragraphs (b)(4) through (19) respectively;

■ b. Add new paragraph (b)(3); and

■ c. Amend newly redesignated (b)(4)(i) introductory text by removing the phrase ''(b)(3)(ii) through (b)(3)(vi)'' and adding the phrase ''(b)(4)(ii) through (b)(4)(vi)'' in its place.

The addition reads as follows:

§ 61.1 Applicability and definitions.

* * * * *

(b) * * *

(3) *Complex airplane* means an airplane that has a retractable landing gear, flaps, and a controllable pitch propeller, including airplanes equipped with an engine control system consisting of a digital computer and associated accessories for controlling the engine and propeller, such as a full authority digital engine control; or, in the case of a seaplane, flaps and a controllable pitch propeller, including seaplanes equipped with an engine control system consisting of a digital computer and associated accessories for controlling the engine and propeller, such as a full authority digital engine control.

* * * * *

■ 3. Amend § 61.31 by revising paragraph (e)(1) introductory text to read as follows:

§ 61.31 Type rating requirements, additional training, and authorization requirements.

* * * * *

(e) * * *

(1) Except as provided in paragraph (e)(2) of this section, no person may act as pilot in command of a complex airplane, unless the person has—

* * * * *

■ 4. Amend § 61.51 by revising paragraph (b)(1)(v) to read as follows:

§ 61.51 Pilot logbooks.

* * * * *

(b) * * *

(v) The name of a safety pilot, if required by § 91.109 of this chapter.

* * * * *

■ 5. Amend § 61.55 by revising paragraph (f)(4) to read as follows:

§ 61.55 Second-in-command qualifications.

* * * * *

(f) * * *

(4) Designated as a safety pilot for purposes required by § 91.109 of this chapter.

* * * * *

■ 6. Amend § 61.58 as follows:

■ a. Revise the section heading and paragraphs (a) and (d)(1) through (4);

■ b. Add paragraph (d)(5);

■ c. Redesignate paragraphs (e) through (g) as paragraphs (g) through (i), respectively;

■ d. Add new paragraphs (e) and (f);

■ e. Amend newly redesignated paragraph (g) introductory text by removing the phrase ''paragraphs (d)(1) through (d)(4)'' and adding in its place the phrase ''paragraphs (d)(1) through (5)'':

■ f. Amend newly redesignated paragraph (g)(1) introductory text by removing the phrase ''paragraphs (e)(2) and (e)(3)'' and adding in its place the phrase ''paragraphs (g)(2) and (3)'';

■ g. Amend newly redesignated paragraph (g)(2) introductory text by removing the phrase ''paragraph (e)'' and adding in its place the phrase ''paragraph (g)''; and

■ h. Amend newly redesignated paragraph (g)(3) introductory text by removing the phrase ''paragraph (e)'' and adding in its place the phrase ''paragraph (g)''.

The revisions and additions read as follows:

§ 61.58 Pilot-in-command proficiency check: Operation of an aircraft that requires more than one pilot flight crewmember or is turbojet-powered.

(a) Except as otherwise provided in this section, to serve as pilot in command of an aircraft that is type certificated for more than one required pilot flight crewmember or is turbojet-powered, a person must—

(1) Within the preceding 12 calendar months, complete a pilot-in-command proficiency check in an aircraft that is type certificated for more than one required pilot flight crewmember or is turbojet-powered; and

(2) Within the preceding 24 calendar months, complete a pilot-in-command proficiency check in the particular type of aircraft in which that person will serve as pilot in command, that is type certificated for more than one required pilot flight crewmember or is turbojet-powered.

* * * * *

(d) * * *

(1) A pilot-in-command proficiency check conducted by a person authorized by the Administrator, consisting of the aeronautical knowledge areas, areas of operations, and tasks required for a type rating, in an aircraft that is type certificated for more than one pilot flight crewmember or is turbojet-powered;

(2) The practical test required for a type rating, in an aircraft that is type certificated for more than one required pilot flight crewmember or is turbojet-powered;

(3) The initial or periodic practical test required for the issuance of a pilot examiner or check airman designation, in an aircraft that is type certificated for more than one required pilot flight crewmember or is turbojet-powered;

(4) A pilot proficiency check administered by a U.S. Armed Force that qualifies the military pilot for pilot-in-command designation with instrument privileges, and was performed in a military aircraft that the military requires to be operated by more than one pilot flight crewmember or is turbojet-powered;

(5) For a pilot authorized by the Administrator to operate an experimental turbojet-powered aircraft that possesses, by original design or through modification, more than a single seat, the required proficiency check for all of the experimental turbojet-powered aircraft for which the pilot holds an authorization may be accomplished by completing any one of the following:

(i) A single proficiency check, conducted by an examiner authorized by the Administrator, in any one of the experimental turbojet-powered aircraft for which the airman holds an authorization to operate if conducted within the prior 12 months;

(ii) A single proficiency check, conducted by an examiner authorized by the Administrator, in any experimental turbojet-powered aircraft (*e.g.*, if a pilot acquires a new authorization to operate an additional experimental turbojet-powered aircraft, the check for that new authorization will meet the intent), if conducted within the prior 12 months;

(iii) Current qualification under an Advanced Qualification Program (AQP) under subpart Y of part 121 of this chapter;

(iv) Any proficiency check conducted under subpart K of part 91, part 121, or part 135 of this chapter within the prior 12 months if conducted in a turbojet-powered aircraft; or

(v) Any other § 61.58 proficiency check conducted within the prior 12 months if conducted in a turbojet-powered aircraft.

(e) The pilot of a multi-seat experimental turbojet-powered aircraft who has not received a proficiency check within the prior 12 months in accordance with this section may continue to operate such aircraft in accordance with the pilot's authorizations. However, the pilot is prohibited from carriage of any persons in any experimental turbojet-powered aircraft with the exception of those individuals authorized by the Administrator to conduct training, conduct flight checks, or perform pilot certification functions in such aircraft, and only during flights specifically related to training, flight checks, or certification in such aircraft.

(f) This section will not apply to a pilot authorized by the Administrator to serve as pilot in command in experimental turbojet-powered aircraft that possesses, by original design, a single seat, when operating such single-seat aircraft.

* * * * *

■ 7. Amend § 61.65 as follows:

■ a. Revise paragraphs (a)(1), (d)(1), (e)(1), and (f)(1);

■ b. Redesignate paragraphs (g) and (h) as paragraphs (h) and (i);

■ c. Add new paragraph (g).

The revisions and additions read as follows:

§ 61.65 Instrument rating requirements.

(a) * * *

(1) Hold at least a current private pilot certificate, or be concurrently applying for a private pilot certificate, with an airplane, helicopter, or powered-lift rating appropriate to the instrument rating sought;

* * * * *

(d) * * *

(1) Except as provided in paragraph (g) of this section, 50 hours of cross-country flight time as pilot in command, of which 10 hours must have been in an airplane; and

* * * * *

(e) * * *

(1) Except as provided in paragraph (g) of this section, 50 hours of cross-country flight time as pilot in command, of which 10 hours must have been in a helicopter; and

* * * * *

(f) * * *

(1) Except as provided in paragraph (g) of this section, 50 hours of cross-country flight time as pilot in command, of which 10 hours must have been in a powered-lift; and

* * * * *

(g) An applicant for a combined private pilot certificate with an instrument rating may satisfy the cross-country flight time requirements of this section by crediting:

(1) For an instrument-airplane rating or an instrument-powered-lift rating, up to 45 hours of cross-country flight time performing the duties of pilot in command with an authorized instructor; or

(2) For an instrument-helicopter rating, up to 47 hours of cross-country flight time performing the duties of pilot in command with an authorized instructor.

* * * * *

■ 8. Amend § 61.71 by adding paragraph (c) to read as follows:

§ 61.71 Graduates of an approved training program other than under this part: Special rules.

* * * * *

(c) A person who holds a foreign pilot license and is applying for an equivalent U.S. pilot certificate on the basis of a Bilateral Aviation Safety Agreement and associated Implementation Procedures for Licensing is considered to have met the applicable aeronautical experience, aeronautical knowledge, and areas of operation requirements of this part.

PART 91—GENERAL OPERATING AND FLIGHT RULES

■ 9. The authority citation for part 91 continues to read as follows:

Authority: 49 U.S.C. 106(g), 1155, 40103, 40113, 40120, 44101, 44111, 44701, 44704, 44709, 44711, 44712, 44715, 44716, 44717, 44722, 46306, 46315, 46316, 46504, 46506–46507, 47122, 47508, 47528–47531, articles 12 and 29 of the Convention on International Civil Aviation (61 stat. 1180).

■ 10. Amend SFAR No. 108 by revising paragraph (b)(3) of section 2 to read as follows:

Special Federal Aviation Regulation No. 108—Mitsubishi MU–28 Series Special Training, Experience, and Operating Requirements

* * * * *

2. * * *

(b) * * *

(3) The pilot-in-command is conducting a simulated instrument flight and is using a safety pilot other than the pilot-in-command who manipulates the controls for the purposes of 14 CFR 91.109, and no passengers or cargo are carried on board the airplane.

* * * * *

■ 11. Amend § 91.109 as follows:

■ a. Revise paragraph (a) introductory text;

■ b. Redesignating paragraphs (b) and (c) as paragraphs (c) and (d), respectively;

■ c. Add new paragraph (b).

The revision and addition read as follows:

§ 91.109 Flight instruction; simulated instrument flight and certain flight tests.

(a) No person may operate a civil aircraft (except a manned free balloon) that is being used for flight instruction unless that aircraft has fully functioning dual controls. However, instrument flight instruction may be given in an airplane that is equipped with a single, functioning throwover control wheel that controls the elevator and ailerons, in place of fixed, dual controls, when—

* * * * *

(b) An airplane equipped with a single, functioning throwover control wheel that controls the elevator and ailerons, in place of fixed, dual controls may be used for flight instruction to conduct a flight review required by § 61.56 of this chapter, or to obtain recent flight experience or an instrument proficiency check required by § 61.57 when—

(1) The airplane is equipped with operable rudder pedals at both pilot stations;

(2) The pilot manipulating the controls is qualified to serve and serves as pilot in command during the entire flight;

(3) The instructor is current and qualified to serve as pilot in command of the airplane, meets the requirements of § 61.195(b), and has logged at least 25 hours of pilot-in-command flight time in the make and model of airplane; and

(4) The pilot in command and the instructor have determined the flight can be conducted safely.

* * * * *

PART 141—PILOT SCHOOLS

■ 12. The authority citation for 14 CFR part 141 continues to read as follows:

Authority: 49 U.S.C. 106(g), 40113, 44701–44703, 44707, 44709, 44711, 45102–45103, 45301–45302.

■ 13. Revise § 141.45 to read as follows:

§ 141.45 Ground training facilities.

An applicant for a pilot school or provisional pilot school certificate must show that:

(a) Except as provided in paragraph (c) of this section, each room, training booth, or other space used for instructional purposes is heated, lighted, and ventilated to conform to local building, sanitation, and health codes.

(b) Except as provided in paragraph (c) of this section, the training facility is so located that the students in that facility are not distracted by the training conducted in other rooms, or by flight and maintenance operations on the airport.

(c) If a training course is conducted through an internet-based medium, the holder of a pilot school certificate or provisional pilot school certificate that provides such training need not comply with paragraphs (a) and (b) of this section but must maintain in current status a permanent business location and business telephone number.

■ 14. Amend § 141.53 by adding paragraph (d) to read as follows:

§ 141.53 Approval procedures for a training course: General.

* * * * *

(d) *Additional rules for internet based training courses.* An application for an initial or amended training course offered through an internet based medium must comply with the following:

(1) All amendments must be identified numerically by page, date, and screen. Minor editorial and typographical changes do not require FAA approval, provided the school notifies the FAA within 30 days of their insertion.

(2) For monitoring purposes, the school must provide the FAA an acceptable means to log-in and log-off from a remote location to review all elements of the course as viewed by attendees and to by-pass the normal attendee restrictions.

(3) The school must incorporate adequate security measures into its internet-based courseware information system and into its operating and maintenance procedures to ensure the following fundamental areas of security and protection:

(i) Integrity.

(ii) Identification/Authentication.

(iii) Confidentiality.

(iv) Availability.

(v) Access control.

■ 15. Amend § 141.55 by revising paragraph (c)(1) to read as follows:

§ 141.55 Training course: Contents.

* * * * *

(c) * * *

(1) A description of each room used for ground training, including the room's size and the maximum number of students that may be trained in the room at one time, unless the course is provided via an internet-based training medium;

* * * * *

■ 16. Amend § 141.93 by revising paragraph (a)(3) introductory text to read as follows:

§ 141.93 Enrollment.

(a) * * *

(3) Except for a training course offered through an internet based medium, a

copy of the safety procedures and practices developed by the school that describe the use of the school's facilities and the operation of its aircraft. Those procedures and practices shall include training on at least the following information—

* * * * *

■ 17. Amend § 141.95 by adding paragraph (b)(8) to read as follows:

§ 141.95 Graduation Certificate.

* * * * *

(b) * * *

(8) Certificates issued upon graduating from a course based on internet media must be uniquely identified using an alphanumeric code that is specific to the student graduating from that course.

■ 18. Amend § 141.101 by revising paragraph (a)(3) to read as follows:

§ 141.101 Training records.

(a) * * *

(3) The date the student graduated, terminated training, or transferred to another school. In the case of graduation from a course based on internet media, the school must maintain the identifying graduation certificate code required by § 141.95(b)(8).

* * * * *

■ 19. Add new Appendix M to Part 141 to read as follows:

Appendix M to Part 141—Combined Private Pilot Certification and Instrument Rating Course

1. *Applicability.* This appendix prescribes the minimum curriculum for a combined private pilot certification and instrument rating course required under this part, for the following ratings:

(a) Airplane.

(1) Airplane single-engine.

(2) Airplane multiengine.

(b) Rotorcraft helicopter.

(c) Powered-lift.

2. *Eligibility for enrollment.* A person must hold a sport pilot, recreational, or student pilot certificate prior to enrolling in the flight portion of a combined private pilot certification and instrument rating course.

3. *Aeronautical knowledge training.*

(a) Each approved course must include at least 65 hours of ground training on the aeronautical knowledge areas listed in paragraph (b) of this section that are appropriate to the aircraft category and class rating of the course:

(b) Ground training must include the following aeronautical knowledge areas:

(1) Applicable Federal Aviation Regulations for private pilot privileges, limitations, flight operations, and instrument flight rules (IFR) flight operations.

(2) Accident reporting requirements of the National Transportation Safety Board.

(3) Applicable subjects of the ''Aeronautical Information Manual'' and the appropriate FAA advisory circulars.

(4) Aeronautical charts for visual flight rules (VFR) navigation using pilotage, dead reckoning, and navigation systems.

(5) Radio communication procedures.

(6) Recognition of critical weather situations from the ground and in flight, windshear avoidance, and the procurement and use of aeronautical weather reports and forecasts.

(7) Safe and efficient operation of aircraft under instrument flight rules and conditions.

(8) Collision avoidance and recognition and avoidance of wake turbulence.

(9) Effects of density altitude on takeoff and climb performance.

(10) Weight and balance computations.

(11) Principles of aerodynamics, powerplants, and aircraft systems.

(12) If the course of training is for an airplane category, stall awareness, spin entry, spins, and spin recovery techniques.

(13) Air traffic control system and procedures for instrument flight operations.

(14) IFR navigation and approaches by use of navigation systems.

(15) Use of IFR en route and instrument approach procedure charts.

(16) Aeronautical decision making and judgment.

(17) Preflight action that includes—

(i) How to obtain information on runway lengths at airports of intended use, data on takeoff and landing distances, weather reports and forecasts, and fuel requirements.

(ii) How to plan for alternatives if the planned flight cannot be completed or delays are encountered.

(iii) Procurement and use of aviation weather reports and forecasts, and the elements of forecasting weather trends on the basis of that information and personal observation of weather conditions.

4. *Flight training.*

(a) Each approved course must include at least 70 hours of training, as described in section 4 and section 5 of this appendix, on the approved areas of operation listed in paragraph (d) of section 4 of this appendix that are appropriate to the aircraft category and class rating of the course:

(b) Each approved course must include at least the following flight training:

(1) *For an airplane single engine course:* 70 hours of flight training from an authorized instructor on the approved areas of operation in paragraph (d)(1) of this section that includes at least—

(i) Except as provided in § 61.111 of this chapter, 3 hours of cross-country flight training in a single engine airplane.

(ii) 3 hours of night flight training in a single-engine airplane that includes—

(A) One cross-country flight of more than 100 nautical miles total distance.

(B) 10 takeoffs and 10 landings to a full stop (with each landing involving a flight in the traffic pattern) at an airport.

(iii) 35 hours of instrument flight training in a single-engine airplane that includes at least one cross-country flight that is performed under IFR and—

(A) Is a distance of at least 250 nautical miles along airways or air traffic control-directed (ATC-directed) routing with one segment of the flight consisting of at least a straight-line distance of 100 nautical miles between airports.

(B) Involves an instrument approach at each airport.

(C) Involves three different kinds of approaches with the use of navigation systems.

(iv) 3 hours of flight training in a single-engine airplane in preparation for the practical test within 60 days preceding the date of the test.

(2) *For an airplane multiengine course:* 70 hours of training from an authorized instructor on the approved areas of operation in paragraph (d)(2) of this section that includes at least—

(i) Except as provided in § 61.111 of this chapter, 3 hours of cross-country flight training in a multiengine airplane.

(ii) 3 hours of night flight training in a multiengine airplane that includes—

(A) One cross-country flight of more than 100 nautical miles total distance.

(B) 10 takeoffs and 10 landings to a full stop (with each landing involving a flight in the traffic pattern) at an airport.

(iii) 35 hours of instrument flight training in a multiengine airplane that includes at least one cross-country flight that is performed under IFR and—

(A) Is a distance of at least 250 nautical miles along airways or ATC-directed routing with one segment of the flight consisting of at least a straight-line distance of 100 nautical miles between airports.

(B) Involves an instrument approach at each airport.

(C) Involves three different kinds of approaches with the use of navigation systems.

(iv) 3 hours of flight training in a multiengine airplane in preparation for the practical test within 60 days preceding the date of the test.

(3) *For a rotorcraft helicopter course:* 70 hours of training from an authorized instructor on the approved areas of operation in paragraph (d)(3) of this section that includes at least—

(i) Except as provided in § 61.111 of this chapter, 3 hours of cross-country flight training in a helicopter.

(ii) 3 hours of night flight training in a helicopter that includes—

(A) One cross-country flight of more than 50 nautical miles total distance.

(B) 10 takeoffs and 10 landings to a full stop (with each landing involving a flight in the traffic pattern) at an airport.

(iii) 35 hours of instrument flight training in a helicopter that includes at least one cross-country flight that is performed under IFR and—

(A) Is a distance of at least 100 nautical miles along airways or ATC-directed routing with one segment of the flight consisting of at least a straight-line distance of 50 nautical miles between airports.

(B) Involves an instrument approach at each airport.

(C) Involves three different kinds of approaches with the use of navigation systems.

(iv) 3 hours of flight training in a helicopter in preparation for the practical test within 60 days preceding the date of the test.

(4) *For a powered-lift course:* 70 hours of training from an authorized instructor on the

approved areas of operation in paragraph (d)(4) of this section that includes at least—

(i) Except as provided in § 61.111 of this chapter, 3 hours of cross-country flight training in a powered-lift.

(ii) 3 hours of night flight training in a powered-lift that includes—

(A) One cross-country flight of more than 100 nautical miles total distance.

(B) 10 takeoffs and 10 landings to a full stop (with each landing involving a flight in the traffic pattern) at an airport.

(iii) 35 hours of instrument flight training in a powered-lift that includes at least one cross-country flight that is performed under IFR and—

(A) Is a distance of at least 250 nautical miles along airways or ATC-directed routing with one segment of the flight consisting of at least a straight-line distance of 100 nautical miles between airports.

(B) Involves an instrument approach at each airport.

(C) Involves three different kinds of approaches with the use of navigation systems.

(iv) 3 hours of flight training in a powered-lift in preparation for the practical test, within 60 days preceding the date of the test.

(c) For use of flight simulators or flight training devices:

(1) The course may include training in a combination of flight simulators, flight training devices, and aviation training device, provided it is representative of the aircraft for which the course is approved, meets the requirements of this section, and the training is given by an authorized instructor.

(2) Training in a flight simulator that meets the requirements of § 141.41(a) of this part may be credited for a maximum of 35 percent of the total flight training hour requirements of the approved course, or of this section, whichever is less.

(3) Training in a flight training device or aviation training device that meets the requirements of § 141.41(b) of this part may be credited for a maximum of 25 percent of the total flight training hour requirements of the approved course, or of this section, whichever is less.

(4) Training in a combination of flight simulators, flight training devices, or aviation training devices, described in paragraphs (c)(2) and (c)(3) of this section, may be credited for a maximum of 35 percent of the total flight training hour requirements of the approved course, or of this section, whichever is less. However, credit for training in a flight training device and aviation training device, that meets the requirements of § 141.41(b), cannot exceed the limitation provided for in paragraph (c)(3) of this section.

(d) Each approved course must include the flight training on the approved areas of operation listed in this section that are appropriate to the aircraft category and class rating course—

(1) *For a combined private pilot certification and instrument rating course involving a single-engine airplane:*

(i) Preflight preparation.

(ii) Preflight procedures.

(iii) Airport and seaplane base operations.

(iv) Takeoffs, landings, and go-arounds.

(v) Performance maneuvers.

(vi) Ground reference maneuvers.

(vii) Navigation and navigation systems.

(viii) Slow flight and stalls.

(ix) Basic instrument maneuvers and flight by reference to instruments.

(x) Instrument approach procedures.

(xi) Air traffic control clearances and procedures.

(xii) Emergency operations.

(xiii) Night operations.

(xiv) Postflight procedures.

(2) *For a combined private pilot certification and instrument rating course involving a multiengine airplane:*

(i) Preflight preparation.

(ii) Preflight procedures.

(iii) Airport and seaplane base operations.

(iv) Takeoffs, landings, and go-arounds.

(v) Performance maneuvers.

(vi) Ground reference maneuvers.

(vii) Navigation and navigation systems.

(viii) Slow flight and stalls.

(ix) Basic instrument maneuvers and flight by reference to instruments.

(x) Instrument approach procedures.

(xi) Air traffic control clearances and procedures.

(xii) Emergency operations.

(xiii) Multiengine operations.

(xiv) Night operations.

(xv) Postflight procedures.

(3) *For a combined private pilot certification and instrument rating course involving a rotorcraft helicopter:*

(i) Preflight preparation.

(ii) Preflight procedures.

(iii) Airport and heliport operations.

(iv) Hovering maneuvers.

(v) Takeoffs, landings, and go-arounds.

(vi) Performance maneuvers.

(vii) Navigation and navigation systems.

(viii) Basic instrument maneuvers and flight by reference to instruments.

(ix) Instrument approach procedures.

(x) Air traffic control clearances and procedures.

(xi) Emergency operations.

(xii) Night operations.

(xiii) Postflight procedures.

(4) *For a combined private pilot certification and instrument rating course involving a powered-lift:*

(i) Preflight preparation.

(ii) Preflight procedures.

(iii) Airport and heliport operations.

(iv) Hovering maneuvers.

(v) Takeoffs, landings, and go-arounds.

(vi) Performance maneuvers.

(vii) Ground reference maneuvers.

(viii) Navigation and navigation systems.

(ix) Slow flight and stalls.

(x) Basic instrument maneuvers and flight by reference to instruments.

(xi) Instrument approach procedures.

(xii) Air traffic control clearances and procedures.

(xiii) Emergency operations.

(xiv) Night operations.

(xv) Postflight procedures.

5. *Solo flight training.* Each approved course must include at least the following solo flight training:

(a) *For a combined private pilot certification and instrument rating course involving an airplane single engine:* Five hours of flying solo in a single-engine airplane on the appropriate areas of operation in paragraph (d)(1) of section 4 of this appendix that includes at least—

(1) One solo cross-country flight of at least 100 nautical miles with landings at a minimum of three points, and one segment of the flight consisting of a straight-line distance of at least 50 nautical miles between the takeoff and landing locations.

(2) Three takeoffs and three landings to a full stop (with each landing involving a flight in the traffic pattern) at an airport with an operating control tower.

(b) *For a combined private pilot certification and instrument rating course involving an airplane multiengine:* Five hours of flying solo in a multiengine airplane or 5 hours of performing the duties of a pilot in command while under the supervision of an authorized instructor. The training must consist of the appropriate areas of operation in paragraph (d)(2) of section 4 of this appendix, and include at least—

(1) One cross-country flight of at least 100 nautical miles with landings at a minimum of three points, and one segment of the flight consisting of a straight-line distance of at least 50 nautical miles between the takeoff and landing locations.

(2) Three takeoffs and three landings to a full stop (with each landing involving a flight in the traffic pattern) at an airport with an operating control tower.

(c) *For a combined private pilot certification and instrument rating course involving a helicopter:* Five hours of flying solo in a helicopter on the appropriate areas of operation in paragraph (d)(3) of section 4 of this appendix that includes at least—

(1) One solo cross-country flight of more than 50 nautical miles with landings at a minimum of three points, and one segment of the flight consisting of a straight-line distance of at least 25 nautical miles between the takeoff and landing locations.

(2) Three takeoffs and three landings to a full stop (with each landing involving a flight in the traffic pattern) at an airport with an operating control tower.

(d) *For a combined private pilot certification and instrument rating course involving a powered-lift:* Five hours of flying solo in a powered-lift on the appropriate areas of operation in paragraph (d)(4) of section 4 of this appendix that includes at least—

(1) One solo cross-country flight of at least 100 nautical miles with landings at a minimum of three points, and one segment of the flight consisting of a straight-line distance of at least 50 nautical miles between the takeoff and landing locations.

(2) Three takeoffs and three landings to a full stop (with each landing involving a flight in the traffic pattern) at an airport with an operating control tower.

6. *Stage checks and end-of-course tests.*

(a) Each student enrolled in a private pilot course must satisfactorily accomplish the stage checks and end-of-course tests in accordance with the school's approved training course that consists of the approved areas of operation listed in paragraph (d) of section 4 of this appendix that are

appropriate to the aircraft category and class rating for which the course applies.

(b) Each student must demonstrate satisfactory proficiency prior to receiving an endorsement to operate an aircraft in solo flight.

PART 142—TRAINING CENTERS

■ 20. The authority citation for 14 CFR part 142 continues to read as follows:

Authority: 49 U.S.C. 106(g), 40113, 40119, 44101, 44701–44703, 44705, 44707, 44709–44711, 45102–45103, 45301–45302.

■ 21. Amend § 142.3 by revising the definition of *Flight training equipment* to read as follows:

§ 142.3 Definitions.

* * * * *

Flight training equipment means flight simulators, as defined in § 61.1(b)(6) of this chapter, flight training devices, as defined in § 61.1(b)(8) of this chapter, and aircraft.

* * * * *

Issued in Washington, DC, on August 19, 2011.

J. Randolph Babbitt,

Administrator.

[FR Doc. 2011–22308 Filed 8–30–11; 8:45 am]

BILLING CODE 4910–13–P

DEPARTMENT OF JUSTICE

28 CFR Part 55

[CRT Docket No. 121; A.G. Order No. 3291–2011]

Attorney General's Guidelines on Implementation of the Provisions of the Voting Rights Act Regarding Language Minority Groups

AGENCY: Civil Rights Division, Department of Justice.

ACTION: Final rule.

SUMMARY: This rule updates the Attorney General's interpretative guidelines under the language minority provisions of the Voting Rights Act, which require certain states and political subdivisions to conduct elections in the language of certain ''language minority groups'' in addition to English. The rule reflects 2006 statutory amendments extending the time period for which covered jurisdictions must adhere to the minority language requirements in sections 4(f)(4) and 203 of the Voting Rights Act. The rule also amends the Appendix to the guidelines to reflect 2002 coverage determinations based upon the 2000 Census made by the Director of the Census pursuant to section 203(b) of the Act. It also makes technical changes to conform the guidelines to the 2006 and 2008 amendments to the Voting Rights Act, the 2002 Census determinations, and a 2009 Supreme Court decision, as well as to add or correct statutory citations.

DATES: *Effective Date:* August 31, 2011.

FOR FURTHER INFORMATION CONTACT: T. Christian Herren, Jr., Chief, Voting Section, Civil Rights Division, United States Department of Justice, Room 7254–NWB, 950 Pennsylvania Avenue, NW., Washington, DC 20530, or by telephone at 800–253–3931.

SUPPLEMENTARY INFORMATION: Section 203 of the Voting Rights Act, which requires covered jurisdictions to use languages in addition to English in the electoral process, was added to the Voting Rights Act in 1975, and was amended and extended in 1982, 1992, and, most recently, on July 27, 2006. 120 Stat. 577, Public Law 109–246. The 2006 amendments to the Voting Rights Act extended the requirements of section 203 until August 6, 2032. Section 4(f)(4) of the Voting Rights Act, which requires certain jurisdictions covered by the other special provisions of the Act to use languages in addition to English in the electoral process, was added to the Voting Rights Act in 1975, and was extended in 1982 and in 2006. The 2006 amendments to the Voting Rights Act extended the requirements of section 4(f)(4) until 25 years from the July 27, 2006 date of the enactment of those amendments.

Pursuant to section 203(b) of the Voting Rights Act, 42 U.S.C. 1973aa–1a(b), the Director of the Census published in the **Federal Register** on July 26, 2002, new determinations of coverage based upon the 2000 Census. 67 FR 48871. Under the terms of section 203(b)(4), these determinations became effective upon publication in the **Federal Register** and are not subject to judicial review. Also, on July 26, 2002, the Assistant Attorney General of the Civil Rights Division sent a letter to each covered jurisdiction to notify the jurisdiction of the determinations of coverage, the language minority group or groups for which the jurisdiction is covered, and to provide suggestions to the jurisdiction for developing a successful program of compliance. These letters provided the jurisdictions with a copy of the Census determinations, as published on July 26, 2002, in the **Federal Register**, and a copy of the then-existing Attorney General's interpretative guidelines, 28 CFR part 55.

This rule conforms the Attorney General's language minority interpretative guidelines, 28 CFR part 55, to the new determinations of coverage. No new determinations of coverage have been made pursuant to section 4(f)(4) of the Act. Further information about the language minority requirements of the Act can be found on the Web site of the Voting Section of the U.S. Department of Justice Civil Rights Division at *http://www.justice.gov/crt/voting.*

The definition of ''Act'' in § 55.1 (describing the amendments to the Voting Rights Act) has been amended to reflect the fact of the enactment of the 2006 and 2008 amendments to the Voting Rights Act. Paragraph (a) of § 55.4 has been amended to add statutory citations. Paragraphs (a) and (b) of § 55.7 have been amended to reflect the extension of the time period for the requirements of sections 4(f)(4) and 203 contained in the 2006 amendments to the Voting Rights Act. These paragraphs also have been amended to clarify that earlier termination of these requirements is possible through a bailout action, and to incorporate the United States Supreme Court's interpretation of the bailout provision of section 4(a) of the Voting Rights Act contained in *Northwest Austin Municipal Utility District Number One* v. *Holder,* 557 U.S. ____, 129 S. Ct. 2504 (2009). Paragraph (b) of § 55.8 has been amended to reflect the change in the 2006 amendments to the Voting Rights Act repealing provisions relating to Federal examiners and substituting references to federal observers. The last sentence in § 55.11 has been amended to reflect the manner in which the Director of the Census reported the new coverage determinations under Section 203 after the 2000 Census. Paragraph (b) of § 55.23 is amended to correct an erroneous statutory citation. The Appendix to Part 55 has been revised to reflect the 2002 determinations of the Director of the Census based upon 2000 Census data.

Administrative Procedure Act 5 U.S.C. 553

This rule amends interpretative rules and is therefore exempt from the notice requirement of 5 U.S.C. 553(b) and the opportunity for public participation requirement of 5 U.S.C. 553(c), and the delayed effective date requirement of 5 U.S.C. 553(d) is not mandatory. As provided in 28 CFR 55.24, comments and suggestions from interested persons on the Attorney General's language minority guidelines are always welcome.

Regulatory Flexibility Act

The Attorney General, in accordance with the Regulatory Flexibility Act (5 U.S.C. 605(b)), has reviewed this rule and by approving it certifies that this rule will not have a significant economic impact on a substantial number of small entities because it applies only to governmental entities and jurisdictions that already are required by sections 4(f)(4) and 203 of the Voting Rights Act to provide information related to elections and voting in one or more languages other than English, and this rule does not change these requirements. These jurisdictions have been subject to the requirements of section 4(f)(4) since at least 1975 or 1976, and have been subject to the requirements of section 203 since at least 2002, when the most recent determinations of the Director of the Census were published in the **Federal Register**. In addition, a Regulatory Flexibility Analysis was not required to be prepared for this rule because the Department was not required to publish a general notice of proposed rulemaking for this matter.

Executive Order 12866—Regulatory Planning and Review

This rule has been drafted and reviewed in accordance with Executive Order 12866 Regulatory Planning and Review, § 1(b), Principles of Regulation. This rule merely updates an appendix to reflect determinations made by the Bureau of the Census and makes minor technical changes in pre-existing interpretative rules and, therefore, is not a ''regulation'' or ''rule'' as defined by Executive Order 12866, § 3(d). Accordingly, this rule has not been reviewed by the Office of Management and Budget.

Executive Order 13132—Federalism

This rule does not have federalism implications warranting the preparation of a federalism assessment under Section 6 of Executive Order 13132 because the rule does not alter or modify the existing, statutory requirements of Section 203 of the Voting Rights Act imposed on the states, including units of local government or political subdivisions of the states.

Executive Order 12988—Civil Justice Reform

This rule meets the applicable standards set forth in Sections 3(a) and 3(b)(2) of Executive Order 12988.

Unfunded Mandates Reform Act of 1995

This rule will not result in the expenditure by State, local, and tribal governments, in the aggregate, or by the private sector, of $100,000,000 or more in any one year, and it will not significantly or uniquely affect small governments. Therefore, no actions are necessary under the provisions of the Unfunded Mandates Reform Act of 1995.

Plain Language Instructions

Suggestions on improving the clarity of this document should be provided by mail to T. Christian Herren, Jr., Chief, Voting Section, Civil Rights Division, United States Department of Justice, Room 7254–NWB, 950 Pennsylvania Avenue, NW., Washington, DC 20530, or by telephone to 800–253–3931.

Congressional Review Act

This action pertains to agency organization, procedure, or practice and does not substantially affect the rights or obligations of non-agency parties and, accordingly, is not a ''rule'' as that term is used by the Congressional Review Act (Subtitle E of the Small Business Regulatory Enforcement Fairness Act of 1996 (SBREFA)). Therefore, the reporting requirement of 5 U.S.C. 801 does not apply.

List of Subjects in 28 CFR Part 55

Administrative practice and procedure, Civil rights, Elections, Voting rights.

Accordingly, by virtue of the authority vested in me as Attorney General, including 5 U.S.C. 301, 28 U.S.C. 509 and 510, 42 U.S.C. 1973b, 1973j(d), 1973aa–1a and 1973aa–2, and for the reasons set forth in the preamble, Part 55 of title 28 of the Code of Federal Regulations is amended as set forth below.

PART 55—IMPLEMENTATION OF THE PROVISIONS OF THE VOTING RIGHTS ACT REGARDING LANGUAGE MINORITY GROUPS

■ 1. The authority citation continues to read as follows:

Authority: 5 U.S.C. 301; 28 U.S.C. 509, 510; 42 U.S.C. 1973b, 1973j(d), 1973aa–1a, 1973aa–2.

■ 2. Amend § 55.1 by revising the definition of ''Act'' to read as follows:

§ 55.1 Definitions.

* * * * *

Act means the Voting Rights Act of 1965, 79 Stat. 437, Public Law 89–110, as amended by the Civil Rights Act of 1968, 82 Stat. 73, Public Law 90–284, the Voting Rights Act Amendments of 1970, 84 Stat. 314, Public Law 91–285, the District of Columbia Delegate Act, 84 Stat. 853, Public Law 91–405, the Voting Rights Act Amendments of 1975, 89 Stat. 400, Public Law 94–73, the Voting Rights Act Amendments of 1982, 96 Stat. 131, Public Law 97–205, the Voting Rights Language Assistance Act of 1992, 106 Stat. 921, Public Law 102–344, the Fannie Lou Hamer, Rosa Parks, Coretta Scott King Voting Rights Act Reauthorization and Amendments Act of 2006, 120 Stat. 577, Public Law 109–246, and the Act to Revise the Short Title of the Fannie Lou Hamer, Rosa Parks, and Coretta Scott King Voting Rights Act Reauthorization and Amendments Act, 122 Stat. 2428, Public Law 110–258, 42 U.S.C. 1973 *et seq.* Section numbers, such as ''section 14(c)(3),'' refer to sections of the Act.

* * * * *

■ 3. Amend § 55.4 by revising paragraph (a) to read as follows:

§ 55.4 Effective date; list of covered jurisdictions.

(a) The minority language provisions of the Voting Rights Act were added by the Voting Rights Act Amendments of 1975, and amended and extended in 1982, 1992, and 2006.

(1) The requirements of section 4(f)(4) take effect upon publication in the **Federal Register** of the requisite determinations of the Director of the Census and the Attorney General. Such determinations are not reviewable in any court. *See* section 4(b).

(2) The requirements of section 203(c) take effect upon publication in the **Federal Register** of the requisite determinations of the Director of the Census. Such determinations are not reviewable in any court. *See* section 203(b)(4).

* * * * *

■ 4. Revise § 55.7 to read as follows:

§ 55.7 Termination of coverage.

(a) *Section 4(f)(4).* The requirements of section 4(f)(4) apply for a twenty-five-year period following the effective date of the amendments made by the Fannie Lou Hamer, Rosa Parks, Coretta Scott King, César E. Chávez, Barbara C. Jordan, William C. Velásquez, and Dr. Hector P. Garcia Voting Rights Act Reauthorization and Amendments Act of 2006, which amendments became effective on July 27, 2006. See section 4(a)(8). A covered State, a political subdivision of a covered State, a separately covered political subdivision, or a political subunit of any of the above, may terminate the application of section 4(f)(4) earlier by obtaining the declaratory judgment described in section 4(a) of the Act.

(b) *Section 203(c).* The requirements of section 203(c) apply until August 6,

2032. See section 203(b). A covered jurisdiction may terminate Section 203 coverage earlier if it can prove in a declaratory judgment action in a United States district court, that the illiteracy rate of the applicable language minority group is equal to or less than the national illiteracy rate, as described in section 203(d) of the Act.

■ 5. Amend § 55.8 by revising paragraph (b) to read as follows:

§ 55.8 Relationship between section 4(f)(4) and section 203(c).

* * * * *

(b) Jurisdictions subject to the requirements of section 4(f)(4)—but not jurisdictions subject only to the requirements of section 203(c)—are also subject to the Act's special provisions, such as section 5 (regarding preclearance of changes in voting laws) and section 8 (regarding federal observers).[2] See part 51 of this chapter.

* * * * *

■ 6. Amend § 55.11 by revising the last sentence to read as follows:

§ 55.11 General.

* * * For those jurisdictions covered under section 203(c), the coverage determination (indicated in the appendix) may specify the particular language minority group (in parentheses) for which the jurisdiction is covered, but does not specify the language or dialect to be used for such group.

■ 7. Amend § 55.23 by revising paragraph (b) to read as follows:

§ 55.23 Enforcement by the Attorney General.

* * * * *

(b) Also, certain violations may be subject to criminal sanctions. See sections 12(a) and (c) and 205.

■ 8. Revise the Appendix to part 55 to read as follows:

Appendix to Part 55—Jurisdictions Covered Under Sections 4(f)(4) and 203(c) of the Voting Rights Act of 1965, as Amended [Applicable language minority group(s)]

Jurisdiction	Coverage under sec. 4(f)(4) [1]	Coverage under sec. 203(c) [2]

[1] Coverage determinations for Section 4(f)(4) were published at 40 FR 43746 (Sept. 23, 1975), 40 FR 49422 (Oct. 22, 1975), 41 FR 783 (Jan. 5, 1976) (corrected at 41 FR 1503 (Jan. 8, 1976)), and 41 FR 34329 (Aug. 13, 1976). The Voting Section maintains a current list of those jurisdictions that have maintained successful declaratory judgments from the United States District Court for the District of Columbia pursuant to section 4 of the Act on its Web site at *http://www.justice.gov/crt/about/vot/*. See § 55.7 of this part.

[2] Coverage determinations for Section 203 based on 2000 Census data were published at 67 FR 48871 (July 26, 2002). Subsequent coverage determinations for Section 203 will be based on 2010 American Community Survey census data and subsequent American Community Survey data in 5-year increments, or comparable census data. See section 203(b)(2)(A). New coverage determinations for Section 203 by the Director of the Census Bureau are forthcoming.

Dated: August 24, 2011.

Eric H. Holder, Jr.,

Attorney General.

[FR Doc. 2011–22160 Filed 8–30–11; 8:45 am]

BILLING CODE 4410–13–P

DEPARTMENT OF JUSTICE

28 CFR Part 104

[Docket No. CIV 151]

RIN 1105–AB39

James Zadroga 9/11 Health and Compensation Act of 2010

AGENCY: Department of Justice.

ACTION: Final rule.

SUMMARY: On January 2, 2011, President Obama signed into law the James Zadroga 9/11 Health and Compensation Act of 2010 (Zadroga Act). Title II of the Zadroga Act reactivates the September 11th Victim Compensation Fund of 2001 and requires a Special Master, appointed by the Attorney General, to provide compensation to any individual (or a personal representative of a deceased individual) who suffered physical harm or was killed as a result of the terrorist-related aircraft crashes of September 11, 2001, or the debris removal efforts that took place in the immediate aftermath of those crashes. The Attorney General appointed Sheila L. Birnbaum to serve as Special Master and administer the Fund. On June 21, 2011, the Special Master issued a Notice of Proposed Rulemaking that proposed to amend the regulations implementing the Fund to reflect the changes made by the Zadroga Act. After reviewing the extensive public comments and meeting with numerous victims, victims' families, and other groups, the Special Master is issuing this final rule and associated commentary, which make certain clarifications and changes that are designed to address issues that have been raised. Specifically, the final rule clarifies, supplements, and amends the proposed rule by, among other things: Expanding the geographic zone recognized as a ''9/11 crash site''; providing greater consistency with the World Trade Center Health Program by adding additional forms of proof that may be used to establish eligibility; and clarifying the types of fees and charges that would come within the caps on amounts that a claimant's representative may charge in connection with a claim made to the Fund.

DATES: This final rule takes effect on October 3, 2011.

FOR FURTHER INFORMATION CONTACT: Kenneth L. Zwick, Director, Office of Management Programs, Civil Division, U.S. Department of Justice, Main Building, Room 3140, 950 Pennsylvania Avenue, NW., Washington, DC 20530, telephone 855–885–1555 (TTY 855–885–1558).

SUPPLEMENTARY INFORMATION:

Background

Pursuant to Title IV of Public Law 107–42 (''Air Transportation Safety and System Stabilization Act'') (2001 Act), the September 11th Victim Compensation Fund of 2001 was open for claims from December 21, 2001, through December 22, 2003. The Fund provided compensation to eligible individuals who were physically injured as a result of the terrorist-related aircraft crashes of September 11, 2001, and to personal representatives of those who died as a result of the crashes.

Special Master Kenneth R. Feinberg was appointed by the Attorney General to administer the Fund. The Fund was governed by Interim Final Regulations issued on December 21, 2001, *see* 66 FR 66274, and by Final Regulations issued on March 13, 2002, *see* 67 FR 11233. During its two years of operation, the Fund distributed over $7.049 billion to survivors of 2,880 persons killed in the September 11th attacks and to 2,680 individuals who were injured in the attacks or in the rescue efforts conducted thereafter. In 2004, Special Master Feinberg issued a report describing how the fund was administered. *See* Final Report of the

[2] In addition, a jurisdiction covered under section 203(c) but not under section 4(f)(4) is subject to the Act's special provisions if it was covered under section 4(b) prior to the 1975 Amendments to the Act.

Special Master for the September 11th Victim Compensation Fund of 2001, *available at http://www.justice.gov/final_report.pdf.*

On January 2, 2011, President Obama signed the Zadroga Act into law. Title I of the Zadroga Act establishes a program within the Department of Health and Human Services to provide medical monitoring and treatment benefits to eligible individuals. Title II amends the 2001 Act and reopens the Fund. Among other changes, Title II adds new categories of beneficiaries for the Fund and sets new filing deadlines. It also imposes a cap on the total awards that can be paid by the Fund and limits the fees that an attorney may receive for awards made under the Fund.

The Zadroga Act did not appropriate administrative funds for the Fund to begin taking and processing claims. On April 15, 2011, President Obama signed into law Public Law 112–10, the continuing budget resolution for 2011, which permits the Fund to draw on the money originally allocated in the Zadroga Act in order to pay for its administrative expenses, beginning on October 1, 2011.

The Attorney General appointed Sheila L. Birnbaum to serve as Special Master and to administer the Fund. On June 21, 2011, the Special Master issued the Notice of Proposed Rulemaking, which provided for a 45-day public comment period.

The Department received 95 comments since the publication of the proposed rules. The Special Master's office has reviewed each of these comments. In addition, the Special Master has participated in town hall meetings with several hundred victims, victims' advocates, and others. The Special Master has considered all comments in promulgating the final rules. Significant comments received in response to the proposed rules and any significant changes are discussed below.

Significant Comments or Changes

I. Eligibility

In order to be eligible for the Fund, Title II of the Zadroga Act requires an individual to have been present at a ''9/11 crash site'' at the time or in the immediate aftermath of the crashes, and have suffered ''physical harm or death as a result of'' one of the air crashes or debris removal. The Department received many comments regarding the interpretation of these provisions in the proposed rule.

(a) ''9/11 Crash Site''

In requiring that a claimant have been present at a ''9/11 crash site'' in order to receive compensation from the Fund, Title II of the Zadroga Act recognizes that such sites include more than just the World Trade Center, Pentagon, and Shanksville, Pennsylvania sites and the buildings that were destroyed as a result. Title II of the Zadroga Act defines ''9/11 crash site'' to include both the crash sites themselves, routes of debris removal, and any area that is contiguous to one of the crash sites that the Special Master ''determines was sufficiently close to the site that there was a demonstrable risk of physical harm resulting from'' the impact of the aircraft or subsequent fire, explosions, or building collapses.

During the Fund's first iteration, Special Master Feinberg applied a regulation that required him to make this same determination. At that time, the most prevalent physical injuries were blunt trauma injuries suffered by those who were struck by debris or who were in the zone in which there was a demonstrable risk of physical harm from falling debris, explosions, or fire. Accordingly, the relevant area was defined to include the immediate area surrounding the World Trade Center: Starting from the intersection of Reade and Centre Streets, the northern boundary ran west along Reade Street to the Hudson River; the western boundary was the Hudson River; the southern boundary ran from the Hudson River, east along the line of W. Thames Street, Edgar Street and Exchange Place to Nassau Street; and the eastern boundary, starting from the intersection of Exchange Place and Nassau Street, ran north along Nassau Street to the intersection of Centre and Reade Streets. *See* Final Report of the Special Master for the September 11th Victim Compensation Fund of 2001 at 19 and n. 53. The Zadroga Act, which covers conditions that may have been caused over longer periods of time and thus are not limited to harms caused by falling debris, states that the term ''9/11 crash site'' ''includ[es]'' that original area but could also include other areas.

The proposed rule suggested that the term ''9/11 crash site'' includes the area in Manhattan south of the line that runs along Reade Street from the Hudson River to the intersection of Reade Street and Centre Street, south on Centre Street to the Brooklyn Bridge, and along the Brooklyn Bridge, or any other area contiguous to the crash sites that the Special Master determines was sufficiently close to the site that there was a demonstrable risk of physical harm resulting from the impact of the aircraft or any subsequent fire, explosions, or building collapses (including the immediate area in which the impact occurred, fire occurred, portions of buildings fell, or debris fell upon and injured individuals). Those proposed boundaries are substantially broader than those used in the Fund's first iteration and narrower than boundaries used for the World Trade Center (WTC) Health Program in Title I of the Act.

Several commenters stated that the proposed boundaries were too narrow. Some commenters noted that debris removal barges were located north of Reade Street. With respect to these comments, areas related to debris removal barges will be covered. The definition of ''9/11 crash site'' in the Zadroga Act and proposed and final rules includes ''routes of debris removal, such as barges and Fresh Kills.'' Another commenter urged that survivors who were present at the Shanksville, Pennsylvania, or Pentagon sites should be covered. The Zadroga Act and proposed and final rules cover those who were present at, among other things, the ''Pentagon site, and Shanksville, Pennsylvania site.'' As a result, both the areas in which the barges were located and the Pentagon and Shanksville sites will be covered.

Some suggested that the Fund's geographic definition of ''9/11 crash site'' should be coextensive with the geographic boundaries identified in Title I of the Zadroga Act, for the WTC Health Program. Such boundaries would ensure complete consistency in geographic eligibility under the two programs. While that consistency has value, Title II of the Zadroga Act requires the Special Master to make an independent determination based on the area in which there was a demonstrable risk of harm. Accordingly, the Special Master must review evidence of that risk. That evidence is discussed further below.

Some commenters indicated that dust from the explosions traveled north of Reade Street, as well as into parts of Brooklyn, thereby creating a heightened risk of harm in those areas, too. Some of these comments indicated that dust was visibly present north of Reade Street. A few commenters noted further that even in areas in which dust was not visibly present, harmful microscopic dust particles may have traveled farther north.

A review of the comments and of available scientific evidence suggests that the risk of physical harm differed depending on the level of an individual's exposure. Based on the comments that were submitted, as well as further examination of the available evidence, the Special Master has determined that individuals in the area

of Manhattan south of Canal Street suffered an increased risk of harm as a result of the crashes, depending on the duration, timing and amount of exposure. In addition to the dust that was present most heavily in the area south of Reade Street, there is also evidence suggesting that prolonged exposure to dust between Reade Street and Canal Street created a demonstrable risk of physical harm. There are also substantial numbers of patients who live between Reade Street and Canal Street that are receiving treatment in the World Trade Center Environmental Health Center program. Based on this information, the final rule expands the zone of geographic eligibility to include the area south of Canal Street.

While there is evidence that the smoke plume from the site traveled beyond Manhattan south of Canal Street, the concentrations of contaminants in the smoke cloud were most intense within and very near Ground Zero. By the time the smoke cloud had reached other areas, such as Brooklyn, the particulate concentrations were significantly diluted. Thus while the final rule gives the Special Master discretion to identify, based on additional evidence, additional areas in which there was a demonstrable risk of harm, the initial zone of coverage will include the World Trade Center, Pentagon, and Shanksville sites; the buildings that were destroyed; the area south of Canal St. in lower Manhattan; and the routes of debris removal. It is important to bear in mind, however, that eligibility for the Fund requires not only that a claimant have been present at one of these 9/11 crash sites, but also that the claimant satisfy the Fund's other eligibility criteria, including that the claimant's injury was ''a result of'' the aircraft crashes or debris removal. Depending on the condition, this criterion likely will be satisfied only by individuals with significant exposure, and thus individuals who have transient or limited exposure are unlikely to meet this requirement.

Finally, a few comments expressed uncertainty regarding whether claimants must live in the New York area to be eligible for the Fund. The Special Master does not believe that these questions require any changes to the proposed rule. Although the proposed and final rules address the location of a claimant in the immediate aftermath of the attacks, there is no requirement regarding a claimant's current residence or location. Therefore, eligibility is not limited to those who currently live in the New York area.

(b) Physical Harm or Death as a Result of the Crash or Debris Removal

In requiring that a claimant have suffered ''physical harm or death as a result of'' one of the air crashes or the debris removal, the Zadroga Act also requires the Special Master to determine which physical harms and deaths were ''a result of'' the crashes or debris removal within the meaning of the statute.

Although Title II of the Zadroga Act does not provide additional specificity about the harms that are to be covered by the Fund, Title I of the Zadroga Act, which establishes the WTC Health Program, contains a list of illnesses and health conditions for which exposure to airborne toxins, other hazards and any other adverse conditions resulting from the September 11, 2001 terrorists attacks could be determined by experienced medical professionals to be substantially likely to have been a significant factor in aggravating, causing, or contributing to an illness or health condition, as well as procedures for adding additional conditions to the list over time. That title also provides that in order for an individual to receive treatment under the WTC Health Program, there must be an individual determination that the WTC attacks were ''substantially likely to be a significant factor in aggravating, contributing to, or causing the illness or health condition.''

The proposed rule required the Fund to maintain and publish a list of presumptively covered conditions that resulted from the air crashes or debris removal. This list would consist of the physical injuries and conditions that are found, under the WTC Health Program, to be WTC-related health conditions. The proposed rule also required the Special Master to update this list so that it includes not only those physical conditions listed in Title I of the Zadroga Act, but also any additional physical conditions that the WTC Health Program determines to be WTC-related.

General approach. Many individuals and organizations commented on the general approach that the Fund should take on these issues. One set of comments noted that in order to ensure that the available funds go to those most deserving, it will be important for the Fund to ensure that the compensated injuries are, in fact, caused as a result of the crashes and debris removal. Other comments rightly noted the sacrifices made by the first responders and other claimants, and urged that the Fund reciprocate the generosity that they showed. Through the processes laid out in Zadroga Act and the final rule, the Fund will seek to ensure that eligible claimants are compensated in the manner Congress provided, and that payments to the deserving are not diluted by payments made to claimants who do not actually meet the criteria laid out in the law.

Cancer and other conditions. The most frequently discussed topic in these comments concerned eligibility for individuals with cancer. Most of these comments argued that cancer should be considered a WTC-related condition. Several commenters stated that many first responders who worked or volunteered at Ground Zero have developed cancer, and that it is likely that these conditions resulted from the air crashes or debris removal. To a lesser extent, other illnesses were also suggested for coverage.

After considering all of the comments and the available evidence, the Special Master will continue to rely on the medical judgment made by the WTC Health Program. While the Fund will continue to evaluate new evidence as it becomes available, and will add to its list of presumptively covered conditions any physical injury condition that the WTC Health Program recognizes as WTC-related, the final rule will not add any additional conditions at this time. Title I of the Zadroga Act contains a list of illnesses and health conditions that experienced medical professionals have determined could be found on an individual basis to be substantially likely to have been aggravated, caused, or contributed to by exposure to airborne toxins, other hazards and any other adverse conditions resulting from the September 11, 2001 terrorists attacks. This list does not include any form of cancer. In addition, the Zadroga Act requires the Administrator of the WTC Health Program to consider other conditions for coverage over time, and specifically to ''periodically conduct a review of all available scientific and medical evidence, including findings and recommendations of Clinical Centers of Excellence, published in peer-reviewed journals to determine if, based on such evidence, cancer or a certain type of cancer should be added to the applicable list of WTC-related health conditions.'' 42 U.S.C. sec. 300mm–22(a)(5)(A).

The first periodic review by the WTC Health Program Administrator found insufficient scientific and medical evidence for adding cancer to the list of covered conditions. See First Periodic Review of Scientific and Medical Evidence Related to Cancer for the World Trade Center Health Program; as prepared by the Department of Health and Human Services, Centers for

Disease Control and Prevention, National Institute for Occupational Safety and Health, *available at http://www.cdc.gov/niosh/topics/wtc/prc/prc-1.html.* That review was based on peer-reviewed scientific literature, findings and recommendations solicited from clinics and other stakeholders who monitor the health of WTC first responders, and information solicited from the public through notices issued in March 2011. The WTC Health Program's second review will consider additional evidence that has become available since the initial review, and determine whether it provides a sufficient basis to identify particular types of cancer as WTC-related conditions. If the WTC Health Program determines that certain forms of cancer should be added to the list of WTC-related conditions, the final rule requires the Special Master to add such conditions to the list of presumptively covered conditions for the Fund.

PTSD and mental health conditions. Several comments argued that the Fund should include individuals with Post-Traumatic Stress Disorder (PTSD) or other mental health conditions. The Special Master is unable to change the final rule to accept these comments. As in the Fund's first iteration, the statute creating the Fund limits eligible injuries to those consisting of ''physical harm.'' While individuals with mental or emotional injuries may be eligible for treatment by the WTC Health Program, the statutory language does not permit the Fund to cover individuals with only mental and emotional injuries.

Extraordinary circumstances. Finally, the Special Master notes that the final regulations do not make the list of presumptively covered conditions the only conditions for which a claimant may seek coverage from the Fund. Where the claimant satisfies other eligibility criteria, including presence at a 9/11 crash site, and establishes extraordinary circumstances that were not adequately taken into account in the list of presumptively covered conditions, the proposed rule will permit the Special Master to find the claimant eligible even if the injury in question is not on the list of presumptively covered conditions. Though one commenter suggested that the ''extraordinary circumstances'' test is too high a bar, as a result of the Fund's reliance on the WTC Health Program's process for making decisions based on the best available science, it is anticipated that it will be the unusual case in which a condition not on the list of presumptively covered conditions would be covered. Any lower threshold for that determination would invite much larger volumes of claims that would require extensive, expensive reviews, sapping administrative costs out of the funds available to pay other victims, but would be highly unlikely to result in payable claims. Given those trade-offs, the final rule maintains the ''extraordinary circumstances'' standard.

(c) Immediate Aftermath

One comment suggested that, because many workers continued their efforts after May 30, 2002, the period defined as the ''immediate aftermath'' should be defined to match the eligibility requirements for the WTC Health Program, and that individuals who suffered harms after May 30, 2002, should be eligible if they can meet other eligibility requirements. Because the Zadroga Act defines the ''immediate aftermath'' to end at May 30, 2002, the Fund has no discretion to extend that deadline. Another commenter suggested that regulations make clear that individuals whose work spanned the period before and after May 30, 2002 are eligible to file claims and that any injury sustained by such an individual that is found to have occurred (either in whole or in part) from work at the site after May 30, 2002, shall be deemed to ''relate back'' to the individual's work at the WTC Site prior to May 30, 2002. The Special Master does not believe that this comment requires a change to the rule. The Zadroga Act requires that an individual have been present prior to May 30, 2002 in order to be eligible; an individual's eligibility will not be affected by whether he or she continued to be present after that date. Once an individual is deemed to have been eligible based on presence during the relevant time period, it will not be necessary for the Fund to determine the precise date on which the condition was deemed to have been caused.

(d) Forms of Proof

Several comments also sought to ensure that, to the greatest extent possible, the information required to determine eligibility in the Fund are consistent with the information required for participation in the WTC Health Program. Section 104.22(b)(3)(ii) has been modified to include certain forms of proof that will be considered in the WTC Health Program. The forms of proof listed there are not exhaustive, and the Fund will consider other appropriate forms of proof.

II. Timing and Effect of Filing Claims

Several comments focused on the times by which claimants must file claims, and the consequences of those filings on any September 11th-related civil litigation.

Timing. Commenters expressed concerns regarding the two-year statute of limitations on filing claims. One commenter indicated that if a new condition is added as a presumptively covered condition in the Fund's third year, claimants who had that condition but had not applied in the first two years should not be barred from filing a claim. The Fund agrees that the Zadroga Act's two-year statute of limitations does not bar that claim, and that individuals have two years from the time that they became eligible to file a claim. Sections 104.62(a)(1) and (a)(2) of the final rule make clear that the two-year statute of limitations on a claim does not begin to run before an individual is eligible to file the claim.

One commenter also noted that there may be instances in which the two-year statute of limitations extends past the Fund's five-year limitation on accepting claims. The Zadroga Act provides that notwithstanding the two-year statute of limitations, claims may not be filed after the date that is five years after the regulations become final. The Special Master has no discretion to change the final rule in this respect.

Relationship to litigation. There were a variety of concerns expressed regarding the requirement that claimants in pending WTC-related litigation withdraw from their litigation prior to submitting a claim to the Fund. One comment contended that the requirement should be eliminated entirely, because it puts claimants who already settled their actions on different footing from those who have not already settled their actions, will encourage litigants who might have been successful in their litigation to withdraw from it and apply instead to the Fund, and will reduce the funds available to pay claims from the Fund. There were also concerns that requiring claimants to withdraw from litigation within 90 days of the final regulations would force them to give up their civil actions without knowing whether they would be eligible for payment under the Fund; the commenter proposed that the Fund require withdrawal of the civil action only after the Fund has advised the claimant whether he or she would be eligible for payment. With respect to both issues, the requirement to withdraw from pending WTC-related litigation within 90 days of the regulations becoming final is a statutory provision, which the Special Master has no authority to disregard. Nor may the Fund accept the commenter's suggestion to determine a potential claimant's eligibility prior to requiring the claimant

to withdraw a pending suit. The statute requires such individuals to withdraw from pending litigation within 90 days of the promulgation of these regulations; otherwise the individual ''may not submit a claim.'' Therefore, the Fund cannot accept applications that do not satisfy this requirement.

One comment raised the specific concern that the filing of a claim with the Fund should not preclude a claimant from later filing a civil action regarding harms that a claimant later suffers that are unrelated to the harm for which the claim was submitted. This comment suggests that the release that claimants were required to sign in the Fund's first iteration was overly broad. By law, when a claimant submits a claim, ''the claimant waives the right to file a civil action (or to be a party to an action) in any Federal or State court for damages sustained as a result of the terrorist-related aircraft crashes of September 11, 2001, or for damages arising from or related to debris removal.'' Section 104.61 of the rule requires the Special Master to inform potential claimants of this statutory requirement. While the final rule permits claimants to amend their claims to add new conditions in certain circumstances, the Fund does not have the authority to change the terms or consequences of the statute.

III. Valuation of Claims

A number of commenters suggested changes in the manner in which the Fund would determine the appropriate value of compensable claims.

Methodology for injury claims. One commenter was troubled that the Special Master, in determining economic loss for claimants who suffered physical harm, may rely upon the methodology created for determination of economic loss for claimants who died. The commenter noted that in calculating economic loss for death claims, a deduction is taken for consumption that would not be appropriate in calculating losses for injury claims. The Special Master agrees with the commenter that it would not be appropriate to deduct for consumption in personal injury claims, and notes that the methodology applied in the first iteration of the Fund in fact made an adjustment to eliminate consumption deductions when computing economic loss for injury claims. Accordingly, no change in the rule is necessary.

Future losses. Several comments focused on the manner in which the Fund would calculate future losses. Some noted that the accuracy of calculations of future economic losses may depend on the continuation of the WTC Health Program. These comments note that the WTC Health Program is set to expire in 2016, and that projections of future medical expenses should be lower if treatment provided under that program is extended. In order to ensure that projections of future economic losses are as accurate as possible, the final rule modifies Section 104.47 to clarify that in calculating offsets from the World Trade Center Health Program, the Fund will assume continuing operations of the Program to the extent that the Program is authorized to continue operations at the time of the payment to the claimant. If the Program is extended, shortened, or modified before a claimant's subsequent payments, such subsequent payments may be adjusted to reflect the Program's current status.

Other comments focused on the valuation of replacement services and noted that replacement services losses can be substantial and should be considered. Replacement services loss is included in the definition of economic loss in the statute. Under the Fund's first iteration, the computation of economic loss included replacement services loss where such loss was demonstrated with appropriate proof. In addition, under the proposed rule and the rule that governed the Fund's first iteration, Sections 104.43(c) and 104.45(c) specifically provide that replacement services losses may be compensated for individuals who did not have any prior earned income or who worked only part-time outside the home. That provision does not exclude other individuals for whom replacement services losses may also be appropriate. As in the Fund's first iteration, losses from replacement services may be variable, and claimants must present individualized data to support their inclusion in an award.

Finally, one comment suggested that the valuation approach proposed in Section 104.43(a), regarding the appropriate calculation for future losses for victims who are minors, should rely not on the average income of all wage earners, but on likely educational attainment based on the child's demographics. In the Fund's first iteration, minor children's earning capacity was based on average income of all wage earners. Changing the standard now would result in different projected earnings between identical claimants in the two Funds, based solely on when the claim was filed. While slight modifications to the previous valuation models may be appropriate where the facts underlying the assumptions have changed, adopting a new approach to valuation now would undermine the consistency that is important to treating all claimants equally. Further, given the difficulty of projecting a child's future earning capacity, regardless of the model, a heavily fact-intensive inquiry for such projections may add significant administrative costs with little additional benefit in accuracy.

Valuation of mental injuries. Some commenters noted that it is often difficult to distinguish between the harms caused by physical injuries and those caused by mental injuries, with one commenter suggesting that awards for non-economic losses should take into account the losses caused by PTSD. Under the Zadroga Act, non-economic losses consist of ''losses for physical and emotional pain, suffering, inconvenience, physical impairment, mental anguish, disfigurement, loss of enjoyment of life, loss of society and companionship, loss of consortium (other than loss of domestic service), hedonic damages, injury to reputation, and all other nonpecuniary losses of any kind or nature.'' To the extent that an individual is eligible for compensation by the Fund, an award for non-economic losses will reflect these harms, but no change is required to the final rule.

Offsets. One comment addressed the manner in which pensions are used as offsets, and urged that the regulations distinguish between retirement pensions that are earned through years of service and disability pensions that are based on an injury caused by September 11th. Section 104.47(a) provides that pension funds will be used to offset payments only to the extent they are related to the crashes or debris removal. Standard retirement pensions will not be used as offsets.

Reliance on determinations by other bodies. Several commenters suggested that the Fund should recognize determinations of eligibility or disability made by other government agencies, such as the Department of Veterans Affairs and Department of Labor, administrative boards, or in the September 11th litigation. One commenter noted that relying on such determinations would save administrative costs. Under Section 104.22(c)(2), a claimant may submit any such information for consideration by the Fund. As in the first iteration, the Fund will consider such information in the context of the full claim.

IV. Funding and Payment of Claims

A number of comments focused on the amounts available for payment and the manner in which the regulations proposed to distribute the available

funds. For example, several comments addressed the provisions in the Zadroga Act regarding the $2.775 billion cap on total awards that can be paid by the Fund, as well as the requirement that only $875 million may be paid during the first five years of the Fund. One commenter suggested simply that additional funding will be needed. Another argued that claimants should not have to wait five years to receive full payment. Because Congress explicitly provided these requirements in the statute creating the Fund, these requirements cannot be changed by the Special Master.

Another comment focused on the schedule of payments, and suggested that instead of evenly dividing the funds available to make the initial award payments, the Fund should take into account the extent of a claimant's harm and the immediacy and severity of the claimant's need. The Special Master has given this suggestion considerable thought, and recognizes that—particularly given that only one-third of the overall funding is available during the Fund's first five years—initial payments may make only a small difference in a claimant's overall circumstance. Because initial payments will be pro-rated, those who have suffered or will suffer greater harms will receive larger payments than those with lesser harms. To that extent, the initial payments will take into account both the extent of the claimant's harm and the immediacy of the claimant's need. However, giving greater awards based on the immediacy of a particular claimant's needs raises numerous practical challenges, such as the nature of the urgent needs that would justify a greater payment: The Zadroga Act empowered the Special Master to determine how much a claimant is entitled to receive for economic losses, but the Special Master is not in a position to compare the urgency of each claimant's needs and resources.

While the final rule thus does not contemplate advance benefits for urgent needs, it does incorporate a change that may ease some of this burden. One comment noted that over the Fund's first five years, it may become apparent that it would be possible to provide claimants with more than one payment without expending all the available funds. The proposed rule contemplated just two rounds of payments to each claimant: An initial payment within the first five years, followed by the remaining payment in the sixth year. If it becomes apparent that sufficient funding is available for additional payments before the sixth year, the final rule gives the Special Master discretion to make such additional payment.

Finally, some commenters asked that the Fund inform claimants of the Fund's full valuation of their award at the time the award decision is made, even though the first payment will only be a pro-rated portion of that total. Under Section 104.33(g), the Special Master will notify the claimant in writing of the final amount of the award. The Special Master intends for this notice to inform the claimant of the Fund's full award determination and the pro-rated amount of the initial payment. In addition, claimants will be informed that they will receive a subsequent payment during the Fund's sixth year, but that the amount of this payment is not certain, and may be reduced pursuant to Section § 104.51 (requiring the Special Master to ratably reduce the amount of compensation in the event that the total amount of all claims exceeds the amount available under law) and Section 104.47 (authorizing the Special Master to recalculate offsets from the World Trade Center Health Program and adjust subsequent payments accordingly).

V. Fees and Expenses

A number of comments sought clarity or modifications in the provisions of the proposed rule regarding the amounts that a representative of a claimant may charge in connection with a claim made to the Fund.

10% cap on fees. Some comments sought clarity on the provisions implementing the Zadroga Act's 10% cap on fees that representatives may charge a client in connection with a claim to the Fund. Specifically, one set of these comments expressed concern that the regulations did not provide sufficient guidance on the types of fees and charges that would come within the cap on amounts that a claimant's representative may charge in connection with a claim made to the Fund. While it is recognized that there may be cases in which an attorney provides some unusual service, and there is no indication in the statute that Congress intended to disadvantage claimants by discouraging those attorneys from providing beneficial services, the Zadroga Act does reflect an intention to limit the amounts that may be charged for routine legal services. Accordingly, the final rule clarifies that the caps on amounts that an attorney may charge include charges for expenses routinely incurred in the course of providing legal services. Thus, for example, absent special circumstances, routine office photocopying costs, as well as fees charged by expert consultants or witnesses, that are routinely incurred in the course of providing legal services, count against the caps on fees that attorneys may charge. By the same token, where an attorney provides a non-routine service, which depending on the circumstances may include acquiring a client's files from a third party (rather than requiring the claimant to collect those files), the attorney may be able to pass along those costs on top of the routine fees. Thus, the final rule notes that charges for services routinely incurred in the course of providing legal services fall within the cap on fees, and provides that attorneys or other representatives may seek the Fund's approval to charge for non-routine services in particular cases.

Records costs. Along similar lines, there were a number of comments regarding the costs of obtaining voluminous medical files that are often in the possession of a claimant's medical provider or previous counsel. Some comments suggested that the Fund establish a retrieval service or limit the fees that custodians of those records may charge claimants or their new attorneys for providing documents that a claimant must provide to the Fund. Others noted that the custodian's costs of producing such records can be significant, too, and that current custodians should be permitted to pass on reasonable costs.

At the outset, it is worth noting that the Fund intends to work with willing custodians who possess large volumes of relevant records to determine the extent to which it is possible to transfer appropriate information to the Fund electronically. Providing the electronic transfer of information where appropriate and cost-effective will reduce burdens and costs for claimants.

Further, while the Zadroga Act does not grant the Fund the authority to establish caps on costs that a third-party custodian not before the Fund may charge for providing records, it does empower the Special Master to ensure that counsel who represent claimants before the Fund are charging appropriate rates. The Special Master recognizes the role that able counsel will serve in the claims process, and notes that in the Fund's first iteration, there was an outpouring of pro bono assistance that was consistent with the spirit of the legislation and the Bar's tradition of public service. While the Zadroga Act does not prevent a claimant's previous counsel from passing along certain minimal administrative costs associated with the transfer of files, attorneys have professional obligations regarding a client's access to his or her records. The

Zadroga Act empowers the Special Master to reduce the fees that an attorney may charge claimants, and attorneys who charge unreasonable costs for the services provided should expect that, in appropriate cases, the Fund will exercise its statutory authority to limit the fees charged.

Effects of fees charged in a previous settlement. One comment focused on the question of whether certain attorneys may charge fees in connection with a claim filed with the Fund. Specifically, the commenter expressed concern regarding Section 104.81 of the proposed rule, which implements the Zadroga Act's statutory cap on fees that an attorney who charged a fee in connection with a prior September 11th-related settlement may charge in connection with a claim submitted to the Fund. Under the Zadroga Act, such an attorney may charge a fee in connection with the claim to the Fund only if the legal fee charged in connection with the settlement ''is less than 10 percent of the aggregate amount of compensation awarded to such individual through such settlement''; in such instances, the attorney may receive only such funds as are necessary to reach a total payment that equals 10 percent of the aggregate compensation from the settlement. The commenter expressed concern that Section 104.81 of the proposed regulation interprets this provision in a manner that is inequitable to attorneys who previously represented clients in a settlement, and argued that the cap on fees should be based on the aggregate of the civil settlement and recoveries under the Fund. The statute refers to ''the aggregate amount of compensation awarded to such individual through such *settlement''* (emphasis added), and therefore does not permit such a reading.

Along similar lines, the commenter suggested that Section 104.81(b)(1) of the proposed rule be clarified to give guidance on whether an attorney who previously charged a fee in connection with a previous settlement may charge a client's new counsel a ''consultation or participation fee'' in connection with the client's claim to the Fund. The commenter suggests that such consultation or participation fee would allow the former attorney to provide time and resources to assist the new counsel. The statutory provision in question provides that ''the representative of the individual may not charge any amount for compensation for services rendered in connection with a claim filed under this title.'' The proposed regulatory provision on which the commenter sought clarification had stated that such attorney may not charge ''that individual'' any such amount; the commenter suggests that because a consultation fee would not increase the overall charge to the claimant herself, but would be charged only to the claimant's new counsel, a consultation or participation fee achieves the statutory objectives. The Special Master disagrees, and the final rule clarifies that provision. Because Congress dictated that the representative ''may not charge any amount for compensation for services rendered in connection with a claim,'' it would defeat Congress's intention were that representative permitted to charge an amount for services rendered. Accordingly, Section 104.81(b)(1) is clarified in the final rule to track, with one exception, the statutory language. Because it does not appear that Congress intended to forbid such a representative from charging for services rendered in connection with claims filed by *other* clients, whom the representative did not charge any amount in a previous settlement, Section 104.81(b)(1) is clarified to provide that ''the representative who charged such legal fee may not charge any amount for compensation for services rendered in connection with a claim filed *by or on behalf of that individual* under this title'' (emphasis added).

VI. Other Comments

The Fund received a number of additional comments that, while not requiring changes to the regulations, raise important issues for the administration of the Fund. As the Special Master has indicated previously, her goal is to design a program that is fair, transparent, and easy to navigate. The many suggestions along these lines will be extremely valuable as the Fund gets up and running.

Comments stressed the importance of making the claims process as accessible to the public as possible, a goal that the Special Master shares. Commenters suggested several ways that the Fund can make this goal a reality. They stressed the value of transparency, so that claimants can make informed decisions and understand the reasons for how their claims are handled. The Special Master agrees that making public as much information as possible concerning the Fund's valuation methodologies will assist claimants in deciding whether to file with the Fund or pursue other forms of relief. The Fund will provide information outside the context of formal regulations, such as through Frequently Asked Questions, periodic reports, explanations of decisions to individual claimants, and other materials on the Fund's Web site, in order to give claimants greater confidence in the Fund's decision-making processes.

Making the Fund accessible to the public also requires that the process be as simple and non-bureaucratic as possible. Although claimants should be able to use an attorney if they so choose, the process should be simple enough that claimants can participate without the need for one—and the Special Master should encourage attorneys to provide pro bono assistance. Given the diversity of the eligible population, commenters also urged the Fund to translate key forms and other materials into languages other than English. The Special Master agrees with these commenters and will take steps to make the Fund more accessible in these ways.

In addition to creating a process that is transparent, commenters also urged the Special Master to recognize that between private litigation and various governmental programs operating in this space, a lack of consistency can lead to confusion, frustration, and increased burdens on claimants who have already suffered extensively. Commenters noted that this can play out in a variety of contexts: Different sets of forms and proof requirements; different types of harms and valuation methodologies; and inconsistent determinations between government programs ostensibly aimed at the same populations. While the Fund has certain unique statutory purposes, the Special Master recognizes that unnecessary inconsistency and redundancy are in no one's interests. So while some differences are inevitable, coordination with other government programs will be an important consideration in the Fund's operations. Importantly, as part of the Fund's efforts to minimize burdens on claimants, it will work with medical providers and others in possession of claimants' information to provide for appropriate transfers of electronic data where possible.

The Special Master appreciates all of these comments, as well as the many comments expressing appreciation or good wishes for the Fund's operations. While the suggestions here do not require changes in the regulations, they suggest a number of ways that the Fund can better achieve its mission. They will all be taken into account as we seek to build a program that serves this community as the Zadroga Act intended.

Regulatory Certifications

Paperwork Reduction Act of 1995

This rule implements Title II of the Zadroga Act, which reactivates the September 11th Victim Compensation Fund of 2001. In order to be able to evaluate claims and provide compensation, the Fund will need to collect information from an individual (or a personal representatives of a deceased individual) who suffered physical harm or was killed as a result of the terrorist-related aircraft crashes of September 11, 2001 or the debris removal efforts that took place in the immediate aftermath of those crashes. Accordingly, the Department of Justice (DOJ), Civil Division will submit an information collection request to the Office of Management and Budget (OMB) for review and clearance in accordance with the emergency review procedures of the Paperwork Reduction Act of 1995. The Department will also publish a Notice in the **Federal Register** soliciting public comment on the information collection associated with this rulemaking.

Regulatory Flexibility Act

These regulations set forth procedures by which the Federal government will award compensation benefits to eligible victims of the September 11, 2001 terrorist attacks. Under 5 U.S.C. 601(6), the term ''small entity'' does not include the Federal government, the party charged with incurring the costs attendant to the implementation and administration of the Victims Compensation Fund. Accordingly, the Department has reviewed this rule in accordance with the Regulatory Flexibility Act (5 U.S.C. 605(b)) and by approving it certifies that this rule will not have a significant economic impact on a substantial number of small entities because it provides compensation to eligible individuals who were physically injured as a result of the terrorist-related aircraft crashes of September 11, 2001, and compensation through a ''personal representative'' for those who were killed as a result of those crashes. This rule provides compensation to individuals, not to entities.

Executive Orders 12866 and 13563—Regulatory Review

This regulation has been drafted and reviewed in accordance with Executive Order 12866, ''Regulatory Planning and Review'' section 1(b), Principles of Regulation and in accordance with Executive Order 13563 ''Improving Regulation and Regulatory Review'' section 1(b) General Principles of Regulation.

The Department of Justice has determined that this rule is an ''economically significant regulatory action'' under Executive Order 12866, section 3(f), Regulatory Planning and Review, and accordingly this rule has been reviewed by the Office of Management and Budget.

Further, both Executive Orders 12866 and 13563 direct agencies to assess all costs and benefits of available regulatory alternatives and, if regulation is necessary, to select regulatory approaches that maximize net benefits (including potential economic, environmental, public health and safety effects, distributive impacts, and equity). Executive Order 13563 emphasizes the importance of quantifying both costs and benefits, of reducing costs, of harmonizing rules, and of promoting flexibility. The Department has assessed the costs and benefits of this regulation and believes that the regulatory approach selected maximizes net benefits.

Assessment of Benefits, Costs, and Alternatives.

As required by Executive Order 13563 and Executive Order 12866 for economically significant regulatory actions, the Department has assessed the benefits and costs anticipated from this rulemaking and considered whether there are reasonably feasible alternatives to this rulemaking, including considering whether there are reasonably viable non-regulatory actions that could be taken in lieu of this rulemaking. The purpose of this rulemaking is to provide the legal and administrative framework necessary to provide compensation to any individual (or a personal representative of a deceased individual) who suffered physical harm or was killed as a result of the terrorist-related aircraft crashes of September 11, 2001 or the debris removal efforts that took place in the immediate aftermath of those crashes, as provided by Title II of the Zadroga Act. The primary benefits and costs of this rulemaking are both set by statute as Congress has appropriated a capped amount—$2.775 billion payable over a period of years—for this program. Because the $2.775 billion appropriated by Congress for the Fund must pay for claimant awards as well as the Fund's administrative expenses, it is important for the Fund to establish procedures to screen out ineligible or inappropriate claims while keeping administrative expenses as low as possible consistent with the goal of ensuring that funds are not diverted to processing ineligible claims in order to maximize the amount of funds available for claimants. Finally, based on past practice with the operation of the original Fund and the necessity to establish the legal and administrative framework for the reopened Fund, the Department concludes that there are no viable non-regulatory actions that it could take to implement the Zadroga Act in a fair and efficient manner.

Executive Order 13132—Federalism

This regulation will not have substantial direct effects on the States, on the relationship between the national government and the States, or on distribution of power and responsibilities among the various levels of government. Therefore, in accordance with Executive Order 13132, it is determined that this rule does not have sufficient federalism implications to warrant the preparation of a Federalism Assessment. However, the Department of Justice has worked cooperatively with state and local officials in the affected communities in the preparation of this rule. Also, the Department individually notified national associations representing elected officials regarding this rulemaking.

Executive Order 12988—Civil Justice Reform

This regulation meets the applicable standards set forth in sections 3(a) and 3(b)(2) of Executive Order 12988.

Unfunded Mandates Reform Act of 1995

This rule will not result in the expenditure by State, local and tribal governments, in the aggregate, or by the private sector, of $100,000,000 or more in any one year, and it will not significantly or uniquely affect small governments. Therefore, no actions were deemed necessary under the provisions of the Unfunded Mandates Reform Act of 1995.

Small Business Regulatory Enforcement Fairness Act of 1996

This rule is not a major rule as defined by section 804 of the Small Business Regulatory Enforcement Fairness Act of 1996. This rule will not result in an annual effect on the economy of $100,000,000 or more; a major increase in costs or prices; or significant adverse effects on competition, employment, investment, productivity, innovation, or on the ability of United States-based companies to compete with foreign-based companies in domestic and export markets.

List of Subjects in 28 CFR Part 104

Disaster assistance, Disability benefits, Terrorism.

Accordingly, for the reasons set forth in the preamble, Part 104 of chapter I of Title 28 of the Code of Federal Regulations is amended by revising part 104 to read as follows:

PART 104—SEPTEMBER 11TH VICTIM COMPENSATION FUND

Subpart A—General; Eligibility

Sec.
104.1 Purpose.
104.2 Eligibility definitions and requirements.
104.3 Other definitions.
104.4 Personal Representative.
104.5 Foreign claims.
104.6 Amendments to this part.

Subpart B—Filing for Compensation

104.21 Presumptively covered conditions.
104.22 Filing for compensation.

Subpart C—Claim Intake, Assistance, and Review Procedures

104.31 Procedure for claims evaluation.
104.32 Eligibility review.
104.33 Hearing.
104.34 Publication of awards.
104.35 Claims deemed abandoned by claimants.

Subpart D—Amount of Compensation for Eligible Claimants

104.41 Amount of compensation.
104.42 Applicable state law.
104.43 Determination of presumed economic loss for decedents.
104.44 Determination of presumed noneconomic losses for decedents.
104.45 Determination of presumed economic loss for claimants who suffered physical harm.
104.46 Determination of presumed noneconomic losses for claimants who suffered physical harm.
104.47 Collateral sources.

Subpart E—Payment of Claims

104.51 Payments to eligible individuals.
104.52 Distribution of award to decedent's beneficiaries.

Subpart F—Limitations

104.61 Limitation on civil actions.
104.62 Time limit on filing claims.
104.63 Subrogation.

Subpart G—Measures To Protect the Integrity of the Compensation Program

104.71 Procedures to prevent and detect fraud.

Subpart H—Attorney Fees

104.81 Limitation on attorney fees.

Authority: Title IV of Pub. L. 107–42, 115 Stat. 230, 49 U.S.C. 40101 note; Title II of Pub. L. 111–347, 124 Stat. 3623.

Subpart A—General; Eligibility

§ 104.1 Purpose.

This part implements the provisions of the September 11th Victim Compensation Fund of 2001, Title IV of Public Law 107–42, 115 Stat. 230 (Air Transportation Safety and System Stabilization Act), as amended by the James Zadroga 9/11 Health and Compensation Act of 2010, Title II of Public Law 111–347, to provide compensation to eligible individuals who were physically injured as a result of the terrorist-related aircraft crashes of September 11, 2001, or debris removal during the immediate aftermath of those crashes, and to the ''personal representatives'' of those who were killed as a result of the crashes. All compensation provided through the Fund will be on account of personal physical injuries or death.

§ 104.2 Eligibility definitions and requirements.

(a) *Eligible claimants.* The term eligible claimants means:

(1) Individuals present at a 9/11 crash site at the time of or in the immediate aftermath of the terrorist-related aircraft crashes and who suffered physical harm, as defined herein, as a direct result of the crashes or debris removal;

(2) The Personal Representatives of deceased individuals aboard American Airlines flights 11 or 77 and United Airlines flights 93 or 175; and

(3) The Personal Representatives of individuals who were present at a 9/11 crash site at the time of or in the immediate aftermath of the crashes and who died as a direct result of the terrorist-related aircraft crash.

(4) The term eligible claimants does not include any individual or representative of an individual who is identified to have been a participant or conspirator in the terrorist-related crashes of September 11.

(b) *Immediate aftermath.* The term immediate aftermath means any period beginning with the terrorist-related aircraft crashes of September 11, 2001, and ending on May 30, 2002.

(c) *Physical harm.* (1) The term physical harm shall mean a physical injury to the body that was treated by a medical professional within a reasonable time from the date of discovering such harm; and

(2) The physical injury must be verified by medical records created by or at the direction of the medical professional who provided the medical care contemporaneously with the care.

(d) *Personal Representative.* The term Personal Representative shall mean the person determined to be the Personal Representative under § 104.4 of this part.

(e) *WTC Health Program.* The term WTC Health Program means the World Trade Center Health Program established by Title I of Public Law 111–347 (codified at Title XXXIII of the Public Health Service Act, 42 U.S.C. 300mm through 300mm–61).

(f) *WTC-related health condition.* The term WTC-related health condition means those health conditions identified as WTC-related by Title I of Public Law 111–347 and by regulations implementing that Title.

(g) *9/11 crash site.* The term 9/11 crash site means:

(1) The World Trade Center site, Pentagon site, and Shanksville, Pennsylvania site; or

(2) The buildings or portions of buildings that were destroyed as a result of the terrorist-related airplane crashes of September 11, 2001; or

(3) The area in Manhattan south of the line that runs along Canal Street from the Hudson River to the intersection of Canal Street and East Broadway, north on East Broadway to Clinton Street, and east on Clinton Street to the East River; or

(4) Any other area contiguous to the crash sites that the Special Master determines was sufficiently close to the site that there was a demonstrable risk of physical harm resulting from the impact of the aircraft or any subsequent fire, explosions, or building collapses (including the immediate area in which the impact occurred, fire occurred, portions of buildings fell, or debris fell upon and injured individuals); or

(5) Any area related to, or along, routes of debris removal, such as barges and Fresh Kills.

§ 104.3 Other definitions.

(a) *Beneficiary.* The term beneficiary shall mean a person to whom the Personal Representative shall distribute all or part of the award under § 104.52 of this part.

(b) *Dependents.* The Special Master shall identify as dependents those persons so identified by the victim on his or her Federal tax return for the year prior to the year of the victim's death (or those persons who legally could have been identified by the victim on his or her Federal tax return for the year prior to the year of the victim's death) unless:

(1) The claimant demonstrates that a minor child of the victim was born or adopted on or after January 1 of the year of the victim's death;

(2) Another person became a dependent in accordance with then-applicable law on or after January 1 of the year of the victim's death; or

(3) The victim was not required by law to file a Federal income tax return for the year prior to the year of the victim's death.

(c) *Spouse.* The Special Master shall identify as the spouse of a victim the person reported as spouse on the victim's Federal tax return for the year prior to the year of the victim's death (or the person who legally could have been identified by the victim on his or her Federal tax return for the year prior to the year of the victim's death) unless:

(1) The victim was married or divorced in accordance with applicable state law on or after January 1 of the year of the victim's death; or

(2) The victim was not required by law to file a Federal income tax return for the year prior to the year of the victim's death.

(d) *The Act.* The Act, as used in this part, shall mean Public Law 107–42, 115 Stat. 230 (''Air Transportation Safety and System Stabilization Act''), 49 U.S.C. 40101 note, as amended by the James Zadroga 9/11 Health and Compensation Act of 2010, Title II of Public Law 111–347.

(e) *Victim.* The term victim shall mean an eligible injured claimant or a decedent on whose behalf a claim is brought by an eligible Personal Representative.

(f) *Substantially Complete.* A claim becomes substantially complete when, in the opinion of the Special Master or her designee, the claim contains sufficient information and documentation to determine both the claimant's eligibility and, if the claimant is eligible, an appropriate award.

§ 104.4 Personal Representative.

(a) *In general.* The Personal Representative shall be:

(1) An individual appointed by a court of competent jurisdiction as the Personal Representative of the decedent or as the executor or administrator of the decedent's will or estate.

(2) In the event that no Personal Representative or executor or administrator has been appointed by any court of competent jurisdiction, and such issue is not the subject of pending litigation or other dispute, the Special Master may, in her discretion, determine that the Personal Representative for purposes of compensation by the Fund is the person named by the decedent in the decedent's will as the executor or administrator of the decedent's estate. In the event no will exists, the Special Master may, in her discretion, determine that the Personal Representative for purposes of compensation by the Fund is the first person in the line of succession established by the laws of the decedent's domicile governing intestacy.

(b) *Notice to beneficiaries.* (1) Any purported Personal Representative must, before filing an Eligibility Form, provide written notice of the claim (including a designated portion of the Eligibility Form) to the immediate family of the decedent (including, but not limited to, the decedent's spouse, former spouses, children, other dependents, and parents), to the executor, administrator, and beneficiaries of the decedent's will, and to any other persons who may reasonably be expected to assert an interest in an award or to have a cause of action to recover damages relating to the wrongful death of the decedent.

(2) Personal delivery or transmission by certified mail, return receipt requested, shall be deemed sufficient notice under this provision. The claim forms shall require that the purported Personal Representative certify that such notice (or other notice that the Special Master deems appropriate) has been given. In addition, as provided in § 104.21(b)(5) of this part, the Special Master may publish a list of individuals who have filed Eligibility Forms and the names of the victims for whom compensation is sought, but shall not publish the content of any such form.

(c) *Objections to Personal Representatives.* Objections to the authority of an individual to file as the Personal Representative of a decedent may be filed with the Special Master by parties who assert a financial interest in the award up to 30 days following the filing by the Personal Representative. If timely filed, such objections shall be treated as evidence of a ''dispute'' pursuant to paragraph (d) of this section.

(d) *Disputes as to identity.* The Special Master shall not be required to arbitrate, litigate, or otherwise resolve any dispute as to the identity of the Personal Representative. In the event of a dispute over the appropriate Personal Representative, the Special Master may suspend adjudication of the claim or, if sufficient information is provided, calculate the appropriate award and authorize payment, but place in escrow any payment until the dispute is resolved either by agreement of the disputing parties or by a court of competent jurisdiction. Alternatively, the disputing parties may agree in writing to the identity of a Personal Representative to act on their behalf, who may seek and accept payment from the Fund while the disputing parties work to settle their dispute.

§ 104.5 Foreign claims.

In the case of claims brought by or on behalf of foreign citizens, the Special Master may alter the requirements for documentation set forth herein to the extent such materials are unavailable to such foreign claimants.

§ 104.6 Amendments to this part.

Claimants are entitled to have their claims processed in accordance with the provisions of this Part that were in effect at the time that their claims were submitted under § 104.22(d). All claims will be processed in accordance with the current provisions of this Part, unless the claimant has notified the Special Master that he or she has elected to have the claim resolved under the regulations that were in effect at the time that the claim was submitted under § 104.22(d).

Subpart B—Filing for Compensation

§ 104.21 Presumptively covered conditions.

(a) *In general.* The Special Master shall maintain and publish on the Fund's Web site a list of presumptively covered conditions that resulted from the terrorist-related air crashes of September 11, 2001, or debris removal. The list shall consist of physical injuries that are determined to be WTC-related health conditions by the WTC Health Program.

(b) *Updates.* The Special Master shall update the list of presumptively covered conditions as the list of WTC-related health conditions by the WTC Health Program is updated. Claims may then be amended pursuant to § 104.22(e)(ii).

(c) *Conditions other than presumptively covered conditions.* A claimant may also be eligible for payment under § 104.51 where the claimant—

(1) Presents extraordinary circumstances not adequately addressed by the list of presumptively covered conditions; and

(2) Is otherwise eligible for payment.

§ 104.22 Filing for compensation.

(a) *Compensation form; ''filing.''* A claim shall be deemed ''filed'' for purposes of section 405(b)(3) of the Act (providing that the Special Master shall issue a determination regarding the matters that were the subject of the claim not later than 120 calendar days after the date on which a claim is filed), and for any time periods in this part, when it is substantially complete.

(b) *Eligibility Form.* The Special Master shall develop an Eligibility Form, which may be a portion of a complete claim form, that will require

the claimant to provide information necessary for determining the claimant's eligibility to recover from the Fund.

(1) The Eligibility Form may require that the claimant certify that he or she has dismissed any pending lawsuit seeking damages as a result of the terrorist-related airplane crashes of September 11, 2001, or for damages arising from or related to debris removal (except for actions seeking collateral source benefits) within 90 days of the effective date of this part pursuant to section 405(c)(3)(C)(ii) of the Act and that there is no pending lawsuit brought by a dependent, spouse, or beneficiary of the victim.

(2) The Special Master may require as part of the notice requirement pursuant to § 104.4(b) that the claimant provide copies of a designated portion of the Eligibility Form to the immediate family of the decedent (including, but not limited to, the spouse, former spouses, children, other dependents, and parents), to the executor, administrator, and beneficiaries of the decedent's will, and to any other persons who may reasonably be expected to assert an interest in an award or to have a cause of action to recover damages relating to the wrongful death of the decedent.

(3) The Eligibility Form may require claimants to provide the following proof:

(i) Proof of death: Death certificate or similar official documentation;

(ii) Proof of presence at site: Documentation sufficient to establish presence at a 9/11 crash site, which may include, without limitation, a death certificate, proof of residence, such as a lease or utility bill, records of employment or school attendance, contemporaneous medical records, contemporaneous records of federal, state, city or local government, a pay stub, official personnel roster, site credentials, an affidavit or declaration of the decedent's or injured claimant's employer, or other sworn statement (or unsworn statement complying with 28 U.S.C. 1746) regarding the presence of the victim;

(iii) Proof of physical harm: Certification of a conclusion by the WTC Health Program that the claimant suffers from a WTC-related health condition and is eligible for treatment under the program; or a health form provided by the Fund and completed by a licensed medical professional.

(iv) Personal Representative: Copies of relevant legal documentation, including court orders; letters testamentary or similar documentation; proof of the purported Personal Representative's relationship to the decedent; copies of wills, trusts, or other testamentary documents; and information regarding other possible beneficiaries as requested by the Eligibility Form;

(v) Any other information that the Special Master deems necessary to determine the claimant's eligibility.

(4) The Special Master may also require waivers, consents, or authorizations from claimants to obtain directly from third parties tax returns, medical information, employment information, or other information that the Special Master deems relevant in determining the claimant's eligibility or award, and may request an opportunity to review originals of documents submitted in connection with the Fund.

(5) The Special Master may publish a list of individuals who have filed Eligibility Forms and the names of the victims for whom compensation is sought, but shall not publish the content of any such form.

(c) *Personal Injury Compensation Form and Death Compensation Form.* The Special Master shall develop a Personal Injury Compensation Form that each injured claimant must submit. The Special Master shall also develop a Death Compensation Form that each Personal Representative must submit. These forms shall require the claimant to provide certain information that the Special Master deems necessary to determining the amount of any award, including information concerning income, collateral sources, benefits, settlements and attorneys' fees relating to civil actions described in section 405(c)(3)(C)(iii) of the Act, and other financial information, and shall require the claimant to state the factual basis for the amount of compensation sought. It shall also allow the claimant to submit certain other information that may be relevant, but not necessary, to the determination of the amount of any award.

(1) Claimants shall, at a minimum, submit all tax returns that were filed for the period beginning three years prior to the year of death or discovery of the injury and ending with the year the claim was filed or the year of death. The Special Master may, at the Special Master's discretion, require that claimants submit copies of tax returns or other records for any other period of years the Special Master deems appropriate for determination of an award. The Special Master may also require waivers, consents, or authorizations from claimants to obtain directly from third parties medical information, employment information, or other information that the Special Master deems relevant to determining the amount of any award.

(2) Claimants may attach to the ''Personal Injury Compensation Form'' or ''Death Compensation Form'' any additional statements, documents or analyses by physicians, experts, advisors, or any other person or entity that the claimant believes may be relevant to a determination of compensation.

(d) *Submission of a claim.* Section 405(c)(3)(C) of the Act provides that upon the submission of a claim under the Fund, the claimant waives the right to file a civil action (or to be a party to an action) in any Federal or State court for damages sustained as a result of the terrorist-related aircraft crashes of September 11, 2001, or debris removal, except for civil actions to recover collateral source obligations and civil actions against any person who is a knowing participant in any conspiracy to hijack any aircraft or commit any terrorist act. A claim shall be deemed submitted for purposes of section 405(c)(3)(C) of the Act when the claim is deemed filed pursuant to § 104.22, regardless of whether any time limits are stayed or tolled.

(e) *Amendment of claims.* A claimant who has previously submitted a claim may amend such claim to include:

(1) An injury that the claimant had not suffered (or did not reasonably know the claimant suffered) at the time the claimant filed the previous claim;

(2) A condition that the Special Master has identified and published in accordance with 104.21(a), since the time the claimant filed the previous claim, as a presumptively covered condition;

(3) An injury for which the claimant was previously compensated by the Fund, but only if that injury has substantially worsened, resulting in damages or loss that was not previously compensated; and

(4) Claims for which the individual is an eligible claimant as a result of amendments contained in the James Zadroga 9/11 Health and Compensation Act of 2010, Title II of Public Law 111–347.

(f) *Provisions of information by third parties.* Any third party having an interest in a claim brought by a Personal Representative may provide written statements or information regarding the Personal Representative's claim. The Claims Evaluator or the Special Master or the Special Master's designee may, at his or her discretion, include the written statements or information as part of the claim.

Subpart C—Claim Intake, Assistance, and Review Procedures

§ 104.31 Procedure for claims evaluation.

(a) *Initial review.* Claims Evaluators shall review the forms filed by the claimant and either deem the claim ''filed'' (pursuant to § 104.22(a)) or notify the claimant of any deficiency in the forms or any required documents.

(b) *Procedure.* The Claims Evaluator shall determine eligibility and the claimant's presumed award pursuant to §§ 104.43 to 104.46 of this part and, within 75 days of the date the claim was deemed filed, notify the claimant in writing of the eligibility determination, the amount of the presumed award, and the right to request a hearing before the Special Master or her designee under § 104.33 of this part. After an eligible claimant has been notified of the presumed award, within 30 days the claimant may either accept the presumed compensation determination as the final determination and request payment, or may instead request a review before the Special Master or her designee pursuant to § 104.33. Claimants found to be ineligible may appeal pursuant to § 104.32.

(c) *Multiple claims from the same family.* The Special Master may treat claims brought by or on behalf of two or more members of the same immediate family as related or consolidated claims for purposes of determining the amount of any award.

§ 104.32 Eligibility review.

Any claimant deemed ineligible by the Claims Evaluator may appeal that decision to the Special Master or her designee by filing an eligibility appeal within 30 days on forms created by the office of the Special Master.

§ 104.33 Hearing.

(a) *Supplemental submissions.* The claimant may prepare and file Supplemental Submissions within 21 calendar days from notification of the presumed award. The Special Master shall develop forms appropriate for Supplemental Submissions.

(b) *Conduct of hearings.* Hearings shall be before the Special Master or her designee. The objective of hearings shall be to permit the claimant to present information or evidence that the claimant believes is necessary to a full understanding of the claim. The claimant may request that the Special Master or her designee review any evidence relevant to the determination of the award, including without limitation: The nature and extent of the claimant's injury; evidence of the claimant's presence at a 9/11 crash site; factors and variables used in calculating economic loss; the identity of the victim's spouse and dependents; the financial needs of the claimant; facts affecting noneconomic loss; and any factual or legal arguments that the claimant contends should affect the award. Claimants shall be entitled to submit any statements or reports in writing. The Special Master or her designee may require authentication of documents, including medical records and reports, and may request and consider information regarding the financial resources and expenses of the victim's family or other material that the Special Master or her designee deems relevant.

(c) *Location and duration of hearings.* The hearings shall, to the extent practicable, be scheduled at times and in locations convenient to the claimant or his or her representative. The hearings shall be limited in length to a time period determined by the Special Master or her designee.

(d) *Witnesses, counsel, and experts.* Claimants shall be permitted, but not required, to present witnesses, including expert witnesses. The Special Master or her designee shall be permitted to question witnesses and examine the credentials of experts. The claimant shall be entitled to be represented by an attorney in good standing, but it is not necessary that the claimant be represented by an attorney. All testimony shall be taken under oath.

(e) *Waivers.* The Special Master shall have authority and discretion to require any waivers necessary to obtain more individualized information on specific claimants.

(f) *Award Appeals.* For award appeals, the Special Master or her designee shall make a determination whether:

(1) There was an error in determining the presumptive award, either because the claimant's individual criteria were misapplied or for another reason; or

(2) The claimant presents extraordinary circumstances not adequately addressed by the presumptive award.

(g) *Determination.* The Special Master shall notify the claimant in writing of the final amount of the award, but need not create or provide any written record of the deliberations that resulted in that determination. There shall be no further review or appeal of the Special Master's determination. In notifying the claimant of the final amount of the award, the Special Master may designate the portions or percentages of the final award that are attributable to economic loss and non-economic loss, respectively, and may provide such other information as appropriate to provide adequate guidance for a court of competent jurisdiction and a personal representative.

§ 104.34 Publication of awards.

The Special Master reserves the right to publicize the amounts of some or all of the awards, but shall not publish the name of the claimants or victims that received each award. If published, these decisions would be intended by the Special Master as general guides for potential claimants and should not be viewed as precedent binding on the Special Master or her staff.

§ 104.35 Claims deemed abandoned by claimants.

The Special Master and her staff will endeavor to evaluate promptly any information submitted by claimants. Nonetheless, it is the responsibility of the claimant to keep the Special Master informed of his or her current address and to respond within the duration of this five-year program to requests for additional information. Claims outstanding at the end of this program because of a claimant's failure to complete his or her filings shall be deemed abandoned.

Subpart D—Amount of Compensation for Eligible Claimants

§ 104.41 Amount of compensation.

As provided in section 405(b)(1)(B)(ii) of the Act, in determining the amount of compensation to which a claimant is entitled, the Special Master shall take into consideration the harm to the claimant, the facts of the claim, and the individual circumstances of the claimant. The individual circumstances of the claimant may include the financial needs or financial resources of the claimant or the victim's dependents and beneficiaries. As provided in section 405(b)(6) of the Act, the Special Master shall reduce the amount of compensation by the amount of collateral source compensation the claimant (or, in the case of a Personal Representative, the victim's beneficiaries) has received or is entitled to receive as a result of the terrorist-related aircraft crashes of September 11, 2001. In no event shall an award (before collateral source compensation has been deducted) be less than $500,000 in any case brought on behalf of a deceased victim with a spouse or dependent, or $300,000 in any case brought on behalf of a deceased victim who was single with no dependents.

§ 104.42 Applicable state law.

The phrase ''to the extent recovery for such loss is allowed under applicable

state law,'' as used in the statute's definition of economic loss in section 402(5) of the Act, is interpreted to mean that the Special Master is not permitted to compensate claimants for those categories or types of economic losses that would not be compensable under the law of the state that would be applicable to any tort claims brought by or on behalf of the victim.

§ 104.43 Determination of presumed economic loss for decedents.

In reaching presumed determinations for economic loss for Personal Representatives bringing claims on behalf of decedents, the Special Master shall consider sums corresponding to the following:

(a) *Loss of earnings or other benefits related to employment.* The Special Master, as part of the process of reaching a ''determination'' pursuant to section 405(b) of the Act, shall develop a methodology and publish schedules, tables, or charts that will permit prospective claimants to estimate determinations of loss of earnings or other benefits related to employment based upon individual circumstances of the deceased victim, including: The age of the decedent as of the date of death; the number of dependents who survive the decedent; whether the decedent is survived by a spouse; and the amount and nature of the decedent's income for recent years. The Decedent's salary/income in the three years preceding the year of death (or for other years the Special Master deems relevant) shall be evaluated in a manner that the Special Master deems appropriate. The Special Master may, if she deems appropriate, take an average of income figures for the three years preceding the year of death, and may also consider income for other periods that she deems appropriate, including published pay scales for victims who were government or military employees. The Special Master's methodology and schedules, tables, or charts shall yield presumed determinations of loss of earnings or other benefits related to employment for annual incomes up to but not beyond the 98th percentile of individual income in the United States for the year preceding the year of death. In cases where the victim was a minor child, the Special Master may assume an average income for the child commensurate with the average income of all wage earners in the United States. For victims who were members of the armed services or government employees such as firefighters or police officers, the Special Master may consider all forms of compensation (or pay) to which the victim was entitled. For example, military service members' and uniformed service members' compensation includes all of the various components of compensation, including, but not limited to, basic pay (BPY), basic allowance for housing (BAH), basic allowance for subsistence (BAS), federal income tax advantage (TAD), overtime bonuses, differential pay, and longevity pay.

(b) *Medical expense loss.* This loss equals the out-of-pocket medical expenses that were incurred as a result of the physical harm suffered by the victim (i.e., those medical expenses that were not paid for or reimbursed through health insurance or other programs for which the claimant was not charged). This loss shall be calculated on a case-by-case basis, using documentation and other information submitted by the Personal Representative.

(c) *Replacement services loss.* For decedents who did not have any prior earned income, or who worked only part-time outside the home, economic loss may be determined with reference to replacement services and similar measures.

(d) *Loss due to death/burial costs.* This loss shall be calculated on a case-by-case basis, using documentation and other information submitted by the personal representative and includes the out-of pocket burial costs that were incurred.

(e) *Loss of business or employment opportunities.* Such losses shall be addressed through the procedure outlined above in paragraph (a) of this section.

§ 104.44 Determination of presumed noneconomic losses for decedents.

The presumed non-economic losses for decedents shall be $250,000 plus an additional $100,000 for the spouse and each dependent of the deceased victim. Such presumed losses include a noneconomic component of replacement services loss.

§ 104.45 Determination of presumed economic loss for claimants who suffered physical harm.

In reaching presumed determinations for economic loss for claimants who suffered physical harm (but did not die), the Special Master shall consider sums corresponding to the following:

(a) *Loss of earnings or other benefits related to employment.* The Special Master may determine the loss of earnings or other benefits related to employment on a case-by-case basis, using documentation and other information submitted by the claimant, regarding the actual amount of work that the claimant has missed or will miss without compensation. Alternatively, the Special Master may determine the loss of earnings or other benefits related to employment by relying upon the methodology created pursuant to § 104.43(a) and adjusting the loss based upon the extent of the victim's physical harm.

(1) Disability; in general. In evaluating claims of disability, the Special Master will, in general, make a determination regarding whether the claimant is capable of performing his or her usual profession in light of the injuries.

(2) Total permanent disability. With respect to claims of total permanent disability, the Special Master may accept a determination of disability made by the Social Security Administration as evidence of disability without any further medical evidence or review. The Special Master may also consider determinations of permanent total disability made by other governmental agencies or private insurers in evaluating the claim. The Special Master may require that the claimant submit an evaluation of the claimant's disability and ability to perform his or her occupation prepared by medical experts.

(3) Partial disability. With respect to claims of partial disability, the Special Master may consider evidence of the effect of the partial disability on the claimant's ability to perform his or her usual occupation as well as the effect of the partial disability on the claimant's ability to participate in usual daily activities.

(b) *Medical Expense Loss.* This loss equals the out-of-pocket medical expenses that were incurred as a result of the physical harm suffered by the victim (i.e., those medical expenses that were not paid for or reimbursed through health insurance or other programs for which the claimant was not charged). In addition, this loss equals future out-of-pocket medical expenses that will be incurred as a result of the physical harm suffered by the victim (i.e., those medical expenses that will not be paid for or reimbursed through health insurance). These losses shall be calculated on a case-by-case basis, using documentation and other information submitted by the claimant.

(c) *Replacement services loss.* For injured claimants who did not have any prior earned income, or who worked only part-time outside the home, economic loss may be determined with reference to replacement services and similar measures.

(d) *Loss of business or employment opportunities.* Such losses shall be addressed through the procedure

outlined above in paragraph (a) of this section.

§ 104.46 Determination of presumed noneconomic losses for claimants who suffered physical harm.

The Special Master may determine the presumed noneconomic losses for claimants who suffered physical harm (but did not die) by relying upon the noneconomic losses described in § 104.44 and adjusting the losses based upon the extent of the victim's physical harm. Such presumed losses include any noneconomic component of replacement services loss.

§ 104.47 Collateral sources.

(a) *Payments that constitute collateral source compensation.* The amount of compensation shall be reduced by all collateral source compensation the claimant has received or is entitled to receive as a result of the terrorist-related aircraft crashes of September 11, 2001, or debris removal in the immediate aftermath, including life insurance, pension funds, death benefits programs, payments by Federal, State, or local governments related to the terrorist-related aircraft crashes of September 11, 2001, or debris removal, including under the World Trade Center Health Program established under section 3001 of the Public Health Service Act (to the extent such program is authorized, at the time of the payment, to continue operations), and payments made pursuant to the settlement of a civil action as described in section 405(c)(3)(C)(iii) of the Act. In determining the appropriate collateral source offset for future benefit payments, the Special Master may employ an appropriate methodology for determining the present value of such future benefits. In determining the appropriate value of offsets for pension funds, life insurance and similar collateral sources, the Special Master may, as appropriate, reduce the amount of offsets to take account of self-contributions made or premiums paid by the victim during his or her lifetime. In determining the appropriate collateral source offset for future benefit payments that are contingent upon one or more future event(s), the Special Master may reduce such offsets to account for the possibility that the future contingencies may or may not occur. In cases where the recipients of collateral source compensation are not beneficiaries of the awards from the Fund, the Special Master shall have discretion to exclude such compensation from the collateral source offset where necessary to prevent beneficiaries from having their awards reduced by collateral source compensation that they will not receive.

(b) *Payments that do not constitute collateral source compensation.* The following payments received by claimants do not constitute collateral source compensation:

(1) The value of services or in-kind charitable gifts such as provision of emergency housing, food, or clothing; and

(2) Charitable donations distributed to the beneficiaries of the decedent, to the injured claimant, or to the beneficiaries of the injured claimant by privately funded charitable entities; provided however, that the Special Master may determine that funds provided to victims or their families through a privately funded charitable entity constitute, in substance, a payment described in paragraph (a) of this section.

(3) Tax benefits received from the Federal government as a result of the enactment of the Victims of Terrorism Tax Relief Act.

Subpart E—Payment of Claims

§ 104.51 Payments to eligible individuals.

(a) *Payment date.* Subject to paragraph (c) of this section, the Special Master shall authorize payment of an award to a claimant not later than 20 days after the date on which:

(1) The claimant accepts the presumed award; or

(2) A final award for the claimant is determined after a hearing on appeal.

(b) *Failure to accept or appeal presumed award.* If a claimant fails to accept or appeal the presumed award determined for that claimant within 30 days, the presumed award shall be deemed to have been accepted and all rights to appeal the award shall have been waived.

(c) *Pro-ration and payment of remaining claims.* The James Zadroga 9/11 Health and Compensation Act of 2010, Title II of Public Law 111–347, requires that the total amount of Federal funds paid for expenditures including compensation with respect to claims filed on or after October 3, 2011, will not exceed $2,775,000,000. Furthermore, the total amount of Federal funds expended during the period from October 3, 2011, through October 3, 2016, may not exceed $875,000,000.

(1) *In general.* The Special Master shall ratably reduce the amount of compensation due claimants in a manner to ensure, to the extent possible, that all claimants who are determined to be entitled to a payment receive a payment during the period from October 3, 2011, to October 3, 2016, and that the total amount of all such payments made during that 5-year period do not exceed the amount available under law during that period. The Special Master may periodically adjust the amount of ratable reduction in light of available information regarding potential future claims and available funds, and may make additional payments in light of such adjustments.

(2) *Subsequent payments.* Subject to paragraph (c)(3) of this section, in any case in which the amount of a claim is ratably reduced pursuant to paragraph (c)(1) of this section, on or after October 3, 2016, but in no event later than October 3, 2017, the Special Master shall pay to the claimant the amount that is equal to the difference between:

(i) The amount that the claimant would have been paid under the presumed award; and

(ii) The amount the claimant was paid during the period from October 3, 2011, to October 3, 2016.

(3) In the event that the total amount of all claims under paragraph (c)(2) of this section exceeds the amount available under law, the Special Master shall ratably reduce the amount of compensation due claimants in a manner to ensure, to the extent possible, that all claimants who are determined to be entitled to an additional payment receive their pro-rated share of the available funds.

(4) At the time at which subsequent payments are made, the Special Master may review offsets from the World Trade Center Health Program that were included in the award determination and adjust such subsequent payments to reflect the Program's current status.

(5) During the five years that the Fund is accepting claims, the Special Master shall report periodically on the total amount of all claims under paragraph (c)(2) of this section.

§ 104.52 Distribution of award to decedent's beneficiaries.

The Personal Representative shall distribute the award in a manner consistent with the law of the decedent's domicile or any applicable rulings made by a court of competent jurisdiction. The Personal Representative shall, before payment is authorized, provide to the Special Master a plan for distribution of any award received from the Fund. Notwithstanding any other provision of these regulations or any other provision of state law, in the event that the Special Master concludes that the Personal Representative's plan for distribution does not appropriately compensate the victim's spouse, children, or other

relatives, the Special Master may direct the Personal Representative to distribute all or part of the award to such spouse, children, or other relatives.

Subpart F—Limitations

§ 104.61 Limitation on civil actions.

(a) *General.* Section 405(c)(3)(C) of the Act provides that upon the submission of a claim under the Fund, the claimant waives the right to file a civil action (or be a party to an action) in any Federal or State court for damages sustained as a result of the terrorist-related aircraft crashes of September 11, 2001, or for damages arising from or related to debris removal, except that this limitation does not apply to recover collateral source obligations, or to a civil action against any person who is a knowing participant in any conspiracy to hijack any aircraft or commit any terrorist act. The Special Master shall take appropriate steps to inform potential claimants of section 405(c)(3)(C) of the Act.

(b) *Pending actions.* Claimants who have filed a civil action or who are a party to such an action as described in paragraph (a) of this section may not file a claim with the Special Master unless they withdraw from such action not later than January 2, 2012.

(c) *Settled actions.* In the case of an individual who settled a civil action described in Section 405(c)(3)(C) of the Act, such individual may not submit a claim under this title unless such action was commenced after December 22, 2003, and a release of all claims in such action was tendered prior to January 2, 2011.

§ 104.62 Time limit on filing claims.

(a) *In general.* A claim may be filed by an individual (or by a personal representative on behalf of a deceased individual) during the period beginning on October 3, 2011, and ending on October 3, 2016, as follows:

(1) In the case that the individual knew (or reasonably should have known) before October 3, 2011, that the individual suffered a physical harm at a 9/11 crash site as a result of the terrorist-related aircraft crashes of September 11, 2001, or as a result of debris removal, and is eligible to file a claim under this Part as of October 3, 2011, the individual may file a claim not later than October 3, 2013.

(2) In the case that the individual first knew (or reasonably should have known) on or after October 3, 2011, that the individual suffered such a physical harm or in the case that the individual became eligible to file a claim under this Part on or after that date, the individual may file a claim not later than the last day of the 2-year period beginning on either the date that the individual first knew (or should have known) that the individual both suffered from such harm or the date the individual became eligible to file a claim under this title, whichever is later, but in no event beyond October 3, 2016.

(b) *Determination by Special Master.* The Special Master or the Special Master's designee should determine the timeliness of all claims under paragraph (a) of this section.

§ 104.63 Subrogation.

Compensation under this Fund does not constitute the recovery of tort damages against a third party nor the settlement of a third party action, and the United States shall be subrogated to all potential claims against third party tortfeasors of any victim receiving compensation from the Fund. For that reason, no person or entity having paid other benefits or compensation to or on behalf of a victim shall have any right of recovery, whether through subrogation or otherwise, against the compensation paid by the Fund.

Subpart G—Measures To Protect the Integrity of the Compensation Program

§ 104.71 Procedures to prevent and detect fraud.

(a) *Review of claims.* For the purpose of detecting and preventing the payment of fraudulent claims and for the purpose of assuring accurate and appropriate payments to eligible claimants, the Special Master shall implement procedures to:

(1) Verify, authenticate, and audit claims;

(2) Analyze claim submissions to detect inconsistencies, irregularities, duplication, and multiple claimants; and

(3) Ensure the quality control of claims review procedures.

(b) *Quality control.* The Special Master shall institute periodic quality control audits designed to evaluate the accuracy of submissions and the accuracy of payments, subject to the oversight of the Inspector General of the Department of Justice.

(c) *False or fraudulent claims.* The Special Master shall refer all evidence of false or fraudulent claims to appropriate law enforcement authorities.

Subpart H—Attorney Fees

§ 104.81 Limitation on Attorney Fees.

(a) *In general*—(1) *In general.* Notwithstanding any contract, the representative of an individual may not charge, for services rendered in connection with the claim of an individual under this title, including expenses routinely incurred in the course of providing legal services, more than 10 percent of an award paid under this title on such claim. Expenses incurred in connection with the claim of an individual in this title other than those that are routinely incurred in the course of providing legal services may be charged to a claimant only if they have been approved by the Special Master.

(2) *Certification.* In the case of any claim in connection with which servicers covered by this section were rendered, the representative shall certify his or her compliance with this section and shall provide such information as the Special Master requires to ensure such compliance.

(b) *Limitation*—(1) *In general.* Except as provided in paragraph (b)(2) of this section, in the case of an individual who was charged a legal fee in connection with the settlement of a civil action described in section 405(c)(3)(C)(iii) of the Act, the representative who charged such legal fee may not charge any amount for compensation for services rendered in connection with a claim filed by or on behalf of that individual under this title.

(2) *Exception.* If the legal fee charged in connection with the settlement of a civil action described in section 405(c)(3)(C)(iii) of the Act of an individual is less than 10 percent of the aggregate amount of compensation awarded to such individual through such settlement, the representative who charged such legal fee to that individual may charge an amount for compensation for services rendered to the extent that such amount charged is not more than—

(i) Ten (10) percent of such aggregate amount through the settlement, minus

(ii) The total amount of all legal fees charged for services rendered in connection with such settlement.

(c) *Discretion to lower fee.* In the event that the Special Master finds that the fee limit set by paragraph (a) or (b) of this section provides excessive compensation for services rendered in connection with such claim, the Special Master may, in the discretion of the Special Master, award as reasonable compensation for services rendered an amount lesser than that permitted for in paragraph (a) of this section.

Dated: August 26, 2011.

Sheila L. Birnbaum,

Special Master.

[FR Doc. 2011–22295 Filed 8–30–11; 8:45 am]

BILLING CODE 4410–12–P

ENVIRONMENTAL PROTECTION AGENCY

40 CFR Part 180

[EPA–HQ–OPP–2011–0120; FRL–8885–4]

Tebuconazole; Pesticide Tolerances

AGENCY: Environmental Protection Agency (EPA).

ACTION: Final rule.

SUMMARY: This regulation establishes tolerances for residues of tebuconazole in or on wheat, grain; oats, grain; wheat, shorts; and wheat, germ. Bayer CropScience requested these tolerances under the Federal Food, Drug, and Cosmetic Act (FFDCA).

DATES: This regulation is effective August 31, 2011. Objections and requests for hearings must be received on or before October 31, 2011, and must be filed in accordance with the instructions provided in 40 CFR part 178 (see also Unit I.C. of the **SUPPLEMENTARY INFORMATION**).

ADDRESSES: EPA has established a docket for this action under docket identification (ID) number EPA–HQ–OPP–2011–0120. All documents in the docket are listed in the docket index available at *http://www.regulations.gov.* Although listed in the index, some information is not publicly available, *e.g.,* Confidential Business Information (CBI) or other information whose disclosure is restricted by statute. Certain other material, such as copyrighted material, is not placed on the Internet and will be publicly available only in hard copy form. Publicly available docket materials are available in the electronic docket at *http://www.regulations.gov,* or, if only available in hard copy, at the OPP Regulatory Public Docket in Rm. S–4400, One Potomac Yard (South Bldg.), 2777 S. Crystal Dr., Arlington, VA. The Docket Facility is open from 8:30 a.m. to 4 p.m., Monday through Friday, excluding legal holidays. The Docket Facility telephone number is (703) 305–5805.

FOR FURTHER INFORMATION CONTACT: Tracy Keigwin, Registration Division (7505P), Office of Pesticide Programs, Environmental Protection Agency, 1200 Pennsylvania Ave., NW., Washington, DC 20460–0001; *telephone number:* (703) 305–6605; *e-mail address: keigwin.tracy@epa.gov.*

SUPPLEMENTARY INFORMATION:

I. General Information

A. Does this action apply to me?

You may be potentially affected by this action if you are an agricultural producer, food manufacturer, or pesticide manufacturer. Potentially affected entities may include, but are not limited to those engaged in the following activities:

- Crop production (NAICS code 111).
- Animal production (NAICS code 112).
- Food manufacturing (NAICS code 311).
- Pesticide manufacturing (NAICS code 32532).

This listing is not intended to be exhaustive, but rather to provide a guide for readers regarding entities likely to be affected by this action. Other types of entities not listed in this unit could also be affected. The North American Industrial Classification System (NAICS) codes have been provided to assist you and others in determining whether this action might apply to certain entities. If you have any questions regarding the applicability of this action to a particular entity, consult the person listed under **FOR FURTHER INFORMATION CONTACT**.

B. How can I get electronic access to other related information?

You may access a frequently updated electronic version of EPA's tolerance regulations at 40 CFR part 180 through the Government Printing Office's e-CFR site at *http://ecfr.gpoaccess.gov/cgi/t/text/text-idx?&c=ecfr&tpl=/ecfrbrowse/Title40/40tab_02.tpl.*

C. How can I file an objection or hearing request?

Under FFDCA section 408(g), 21 U.S.C. 346a, any person may file an objection to any aspect of this regulation and may also request a hearing on those objections. You must file your objection or request a hearing on this regulation in accordance with the instructions provided in 40 CFR part 178. To ensure proper receipt by EPA, you must identify docket ID number EPA–HQ–OPP–2011–0120 in the subject line on the first page of your submission. All objections and requests for a hearing must be in writing, and must be received by the Hearing Clerk on or before October 31, 2011. Addresses for mail and hand delivery of objections and hearing requests are provided in 40 CFR 178.25(b).

In addition to filing an objection or hearing request with the Hearing Clerk as described in 40 CFR part 178, please submit a copy of the filing that does not contain any CBI for inclusion in the public docket. Information not marked confidential pursuant to 40 CFR part 2 may be disclosed publicly by EPA without prior notice. Submit a copy of your non-CBI objection or hearing request, identified by docket ID number EPA–HQ–OPP–2011–0120, by one of the following methods:

- *Federal eRulemaking Portal: http://www.regulations.gov.* Follow the on-line instructions for submitting comments.
- *Mail:* Office of Pesticide Programs (OPP) Regulatory Public Docket (7502P), Environmental Protection Agency, 1200 Pennsylvania Ave., NW., Washington, DC 20460–0001.
- *Delivery:* OPP Regulatory Public Docket (7502P), Environmental Protection Agency, Rm. S–4400, One Potomac Yard (South Bldg.), 2777 S. Crystal Dr., Arlington, VA. Deliveries are only accepted during the Docket Facility's normal hours of operation (8:30 a.m. to 4 p.m., Monday through Friday, excluding legal holidays). Special arrangements should be made for deliveries of boxed information. The Docket Facility telephone number is (703) 305–5805.

II. Summary of Petitioned-For Tolerance

In the **Federal Register** of March 29, 2011 (76 FR 17374) (FRL–8867–4), EPA issued a notice pursuant to section 408(d)(3) of FFDCA, 21 U.S.C. 346a(d)(3), announcing the filing of a pesticide petition 0F7792 by Bayer CropScience, 2 T.W. Alexander Drive, P.O. Box 12014, Research Triangle Park, NC 27709. The petition requested that 40 CFR 180.474 be amended by revising tolerances for residues of the fungicide tebuconazole in or on wheat, grain; and oats, grain to 0.15 ppm in order to harmonize with MRLs established in Canada by PMRA. That notice referenced a summary of the petition prepared by Bayer CropScience, the registrant, which is available in the docket, *http://www.regulations.gov.* There were no comments received in response to the notice of filing.

Based upon review of the data supporting the petition, EPA has determined that tolerances on the following processed forms of wheat and oats are needed also: Wheat, shorts and wheat, germ, each at 0.20 ppm. Additionally, the Agency is establishing tolerances for tebuconazole of 0.20 ppm in shorts and germ of wheat. The reasons these additional tolerances are needed is explained in Unit IV.C.

III. Aggregate Risk Assessment and Determination of Safety

Section 408(b)(2)(A)(i) of FFDCA allows EPA to establish a tolerance (the legal limit for a pesticide chemical residue in or on a food) only if EPA determines that the tolerance is ''safe.'' Section 408(b)(2)(A)(ii) of FFDCA defines ''safe'' to mean that ''there is a

reasonable certainty that no harm will result from aggregate exposure to the pesticide chemical residue, including all anticipated dietary exposures and all other exposures for which there is reliable information.'' This includes exposure through drinking water and in residential settings, but does not include occupational exposure. Section 408(b)(2)(C) of FFDCA requires EPA to give special consideration to exposure of infants and children to the pesticide chemical residue in establishing a tolerance and to ''ensure that there is a reasonable certainty that no harm will result to infants and children from aggregate exposure to the pesticide chemical residue. * * *''

Consistent with section 408(b)(2)(D) of FFDCA, and the factors specified in section 408(b)(2)(D) of FFDCA, EPA has reviewed the available scientific data and other relevant information in support of this action. EPA has sufficient data to assess the hazards of and to make a determination on aggregate exposure for tebuconazole including exposure resulting from the tolerances established by this action. EPA's assessment of exposures and risks associated with tebuconazole follows.

A. Toxicological Profile

EPA has evaluated the available toxicity data and considered its validity, completeness, and reliability as well as the relationship of the results of the studies to human risk. EPA has also considered available information concerning the variability of the sensitivities of major identifiable subgroups of consumers, including infants and children.

Tebuconazole has low acute toxicity by the oral or dermal route of exposure, and moderate toxicity by the inhalation route. It is not a dermal sensitizer or a dermal irritant; however, it is slightly to mildly irritating to the eye. With repeated dosing, the primary target organs of tebuconazole toxicity are the liver, the adrenals, the hematopoetic system and the nervous system. Effects on these target organs were seen in both rodent and non-rodent species. In addition, ocular lesions were seen in dogs (including lenticular degeneration and increased cataract formation) following subchronic or chronic exposure. Oral administration of tebuconazole caused developmental toxicity in all species evaluated (rat, rabbit and mouse), with the most prominent effects in the nervous system. The developmental toxicity studies, including the developmental neurotoxicity study, demonstrated an increase in susceptibility in developing fetuses both quantitatively and qualitatively.

Tebuconazole was classified as a Group C possible human carcinogen based on an increase in the incidence of hepatocellular adenomas, carcinomas, and combined adenomas/carcinomas in male and female mice. Mutagenicity data did not demonstrate any evidence of mutagenic potential for tebuconazole.

Specific information on the studies received and the nature of the adverse effects caused by tebuconazole as well as the no-observed-adverse-effect-level (NOAEL) and the lowest-observed-adverse-effect-level (LOAEL) from the toxicity studies can be found at *http://www.regulations.gov* in document entitled ''Tebuconazole: Human Health Risk Assessment to harmonize Tolerances of Tebuconazole in/on Oats and Wheat with Canada,'' pp. 32–37 in docket ID number EPA–HQ–OPP–2011–0120.

B. Toxicological Points of Departure/Levels of Concern

Once a pesticide's toxicological profile is determined, EPA identifies toxicological points of departure (POD) and levels of concern to use in evaluating the risk posed by human exposure to the pesticide. For hazards that have a threshold below which there is no appreciable risk, the toxicological POD is used as the basis for derivation of reference values for risk assessment. PODs are developed based on a careful analysis of the doses in each toxicological study to determine the dose at which no adverse effects are observed (the NOAEL) and the lowest dose at which adverse effects of concern are identified (the LOAEL). Uncertainty/safety factors are used in conjunction with the POD to calculate a safe exposure level—generally referred to as a population-adjusted dose (PAD) or a reference dose (RfD)—and a safe margin of exposure (MOE). For non-threshold risks, the Agency assumes that any amount of exposure will lead to some degree of risk. Thus, the Agency estimates risk in terms of the probability of an occurrence of the adverse effect expected in a lifetime. For more information on the general principles EPA uses in risk characterization and a complete description of the risk assessment process, see *http://www.epa.gov/pesticides/factsheets/riskassess.htm.*

A summary of the toxicological endpoints for tebuconazole used for human risk assessment is shown in the Table of this unit.

TABLE—SUMMARY OF TOXICOLOGICAL DOSES AND ENDPOINTS FOR TEBUCONAZOLE FOR USE IN HUMAN HEALTH RISK ASSESSMENT

Exposure/scenario	Point of departure and uncertainty/safety factors	RfD, PAD, LOC for risk assessment	Study and toxicological effects
Acute dietary (General population including infants and children) (Females 13–50 years of age).	LOAEL = 8.8 mg/kg/day .... UF = 300 UF_A = 10x UF_H = 10x FQPA (UF_L) = 3x	Acute RfD = 0.029 mg/kg/day. aPAD = 0.029 mg/kg/day	Developmental Neurotoxicity Study—Rat. LOAEL = 8.8 mg/kg/day based on decreases in body weights, absolute brain weights, brain measurements and motor activity in offspring.
Chronic dietary (All populations).	LOAEL = 8.8 mg/kg/day .... UF = 300 UF_A = 10x UF_H = 10x FQPA (UF_L) = 3x	Chronic RfD = 0.029 mg/kg/day. cPAD = 0.029 mg/kg/day	Developmental Neurotoxicity Study—Rat. LOAEL = 8.8 mg/kg/day based on decreases in body weights, absolute brain weights, brain measurements and motor activity in offspring.
Incidental oral short-term/Intermediate term (1 to 30 days/1 to 6 months).	LOAEL = 8.8 mg/kg/day .... UF = 300 UF_A = 10x UF_H = 10x FQPA (UF_L) = 3x	Residential LOC for MOE = 300.	Developmental Neurotoxicity Study—Rat. LOAEL = 8.8 mg/kg/day based on decreases in body weights, absolute brain weights, brain measurements and motor activity in offspring.

TABLE—SUMMARY OF TOXICOLOGICAL DOSES AND ENDPOINTS FOR TEBUCONAZOLE FOR USE IN HUMAN HEALTH RISK ASSESSMENT—Continued

Exposure/scenario	Point of departure and uncertainty/safety factors	RfD, PAD, LOC for risk assessment	Study and toxicological effects
Dermal short-term/Intermediate term (1 to 30 days/1 to 6 months).	LOAEL = 8.8 mg/kg/day .... UF = 300 UF_A = 10x UF_H = 10x UF_L = 3x DAF = 23.1%	Residential LOC for MOE = 300.	Developmental Neurotoxicity Study—Rat. LOAEL = 8.8 mg/kg/day based on decreases in body weights, absolute brain weights, brain measurements and motor activity in offspring.
Inhalation short-term/Intermediate term (1 to 30 days/1 to 6 months).	LOAEL = 8.8 mg/kg/day .... UF = 300 UF_A = 10x UF_H = 10x UF_L = 3x Inhalation and oral absorption are assumed to be equivalent.	Residential LOC for MOE = 300.	Developmental Neurotoxicity Study—Rat. LOAEL = 8.8 mg/kg/day based on decreases in body weights, absolute brain weights, brain measurements and motor activity in offspring.
Cancer (Oral, dermal, inhalation).	Classification: Group C—possible human carcinogen based on statistically significant increase in the incidence of hepatocellular adenoma, carcinoma, and combined adenoma/carcinomas in both sexes of NMRI mice. Considering that there was no evidence of carcinogenicity in rats, there was no evidence of genotoxicity for tebuconazole, and tumors were only seen at a high and excessively toxic dose in mice, EPA concluded that the chronic RfD would be protective of any potential carcinogenic effect. The chronic RfD value is 0.029 mg/kg/day which is approximately 9,600 fold lower than the dose that would induce liver tumors (279 mg/kg/day).		

UF_A = extrapolation from animal to human (interspecies). UF_H = potential variation in sensitivity among members of the human population (intraspecies). UF_L = use of a LOAEL to extrapolate a NOAEL. UF_S = use of a short-term study for long-term risk assessment. UF_{DB} = to account for the absence of data or other data deficiency. FQPA SF = Food Quality Protection Act Safety Factor. PAD = population adjusted dose (a = acute, c = chronic). RfD = reference dose. MOE = margin of exposure. LOC = level of concern. DAF = dermal absorption factor.

C. Exposure Assessment

1. *Dietary exposure from food and feed uses.* In evaluating dietary exposure to tebuconazole, EPA considered exposure under the petitioned-for tolerances as well as all existing tebuconazole tolerances in 40 CFR 180.474. EPA assessed dietary exposures from tebuconazole in food as follows:

i. *Acute exposure.* Quantitative acute dietary exposure and risk assessments are performed for a food-use pesticide, if a toxicological study has indicated the possibility of an effect of concern occurring as a result of a 1-day or single exposure.

In estimating acute dietary exposure, EPA used food consumption information from the United States Department of Agriculture (USDA) 1994–1996 and 1998 Nationwide Continuing Surveys of Food Intake by Individuals (CSFII). As to residue levels in food, anticipated residues for bananas, grapes, raisins, nectarines, peaches, and peanut butter were derived using the 2002–2006 USDA Pesticide Data Program (PDP) monitoring data. Anticipated residues for all other registered food commodities were based on field trial data. For uses associated with PP 0F7792, 100 percent crop treated (PCT) was assumed. DEEM (ver. 7.81) default processing factors were assumed for processed commodities associated with petition 0F7792. For several other uses EPA used PCT data as specified in Unit III.C.1.iv.

ii. *Chronic exposure.* In conducting the chronic dietary exposure assessment, EPA used the same data sources as stated in Unit III. C. 1. i. for acute exposure.

iii. *Cancer.* As explained in Unit III.B., the chronic risk assessment is considered to be protective of any cancer effects; therefore, a separate quantitative cancer dietary risk assessment was not conducted.

iv. *Anticipated residue and PCT information.* Section 408(b)(2)(E) of FFDCA authorizes EPA to use available data and information on the anticipated residue levels of pesticide residues in food and the actual levels of pesticide residues that have been measured in food. If EPA relies on such information, EPA must require pursuant to FFDCA section 408(f)(1) that data be provided 5 years after the tolerance is established, modified, or left in effect, demonstrating that the levels in food are not above the levels anticipated. For the present action, EPA will issue such data call-ins as are required by FFDCA section 408(b)(2)(E) and authorized under FFDCA section 408(f)(1). Data will be required to be submitted no later than 5 years from the date of issuance of these tolerances.

Section 408(b)(2)(F) of FFDCA states that the Agency may use data on the actual percent of food treated for assessing chronic dietary risk only if:

- Condition a: The data used are reliable and provide a valid basis to show what percentage of the food derived from such crop is likely to contain the pesticide residue.
- Condition b: The exposure estimate does not underestimate exposure for any significant subpopulation group.
- Condition c: Data are available on pesticide use and food consumption in a particular area, the exposure estimate does not understate exposure for the population in such area.

In addition, the Agency must provide for periodic evaluation of any estimates used. To provide for the periodic evaluation of the estimate of PCT as required by FFDCA section 408(b)(2)(F), EPA may require registrants to submit data on PCT.

The Agency estimated the PCT for existing uses as follows:

Grapes: 25% acute assessment, 15% chronic assessment; grape, raisin: 25% acute assessment, 15% chronic assessment; nectarine: 25% acute assessment, 20% chronic assessment; peach: 20% acute assessment, 15% chronic assessment; and peanuts: 45% acute assessment, 15% chronic assessment.

In most cases, EPA uses available data from United States Department of Agriculture/National Agricultural Statistics Service (USDA/NASS), proprietary market surveys, and the National Pesticide Use Database for the chemical/crop combination for the most

recent 6–7 years. EPA uses an average PCT for chronic dietary risk analysis. The average PCT figure for each existing use is derived by combining available public and private market survey data for that use, averaging across all observations, and rounding to the nearest 5%, except for those situations in which the average PCT is less than one. In those cases, 1% is used as the average PCT and 2.5% is used as the maximum PCT. EPA uses a maximum PCT for acute dietary risk analysis. The maximum PCT figure is the highest observed maximum value reported within the recent 6 years of available public and private market survey data for the existing use and rounded up to the nearest multiple of 5%.

The Agency also used PCT information for tebuconazole on the following recently approved uses: Apples, apricots, cherries (preharvest), sweetcorn, hops, plums, and turnips. The PCT for each crop is as follows: Apples, acute assessment 44%, chronic assessment 41%; Apricots, acute assessment 56%, chronic assessment 43%; Cherries, preharvest, acute assessment 42%, chronic assessment 37%; Corn, sweet, acute assessment 22%, chronic assessment 14%; Hops, acute assessment 64%, chronic assessment 64%; Plum, acute assessment 26%, chronic assessment 24%; Turnip, acute assessment 68%, chronic assessment 44%. EPA estimates PCT for a new pesticide use by assuming that its actual PCT during the initial five years of use on a specific use site will not exceed the recent PCT of the market leader (*i.e.* ,the one with the greatest PCT) on that site. An average market leader PCT, based on three recent surveys of pesticide usage, if available, is used for chronic risk assessment, while the maximum PCT from the same three recent surveys, if available, is used for acute risk assessment. The average and maximum market leader PCTs may each be based on one or two surveys if three are not available. Comparisons are only made among pesticides of the same pesticide type (*i.e.*, the leading fungicide on the use site is selected for comparison with the new fungicide). The market leader PCTs used to determine the average and the maximum may be each for the same pesticide or for different pesticides since the same or different pesticides may dominate for each year. Typically, EPA uses USDA/NASS as the source for raw PCT data because it is publicly available. When a specific use site is not surveyed by USDA/NASS, EPA uses other sources including proprietary data.

An estimated PCT, based on the average PCT of the market leaders, is appropriate for use in chronic dietary risk assessment, and an estimated projected percent crop treated (PPCT), based on the maximum PCT of the market leaders, is appropriate for use in acute dietary risk assessment. This method of estimating PCTs for a new use of a registered pesticide or a new pesticide produces high-end estimates that are unlikely, in most cases, to be exceeded during the initial five years of actual use. Predominant factors that bear on whether the PCTs could be exceeded may include PCTs of similar chemistries, pests controlled by alternatives, pest prevalence in the market and other factors. Based on these factors, EPA has adjusted upward the estimates for three crops: Cherries post-harvest, hops and turnip greens.

The Agency believes that the three conditions discussed in Unit III.C.1.iv. have been met. With respect to Condition a, PCT estimates are derived from Federal and private market survey data, which are reliable and have a valid basis. The Agency is reasonably certain that the percentage of the food treated is not likely to be an underestimation. As to Conditions b and c, regional consumption information and consumption information for significant subpopulations is taken into account through EPA's computer-based model for evaluating the exposure of significant subpopulations including several regional groups. Use of this consumption information in EPA's risk assessment process ensures that EPA's exposure estimate does not understate exposure for any significant subpopulation group and allows the Agency to be reasonably certain that no regional population is exposed to residue levels higher than those estimated by the Agency. Other than the data available through national food consumption surveys, EPA does not have available reliable information on the regional consumption of food to which tebuconazole may be applied in a particular area.

2. *Dietary exposure from drinking water.* The Agency used screening level water exposure models in the dietary exposure analysis and risk assessment for tebuconazole in drinking water. These simulation models take into account data on the physical, chemical, and fate/transport characteristics of tebuconazole. Further information regarding EPA drinking water models used in pesticide exposure assessment can be found at *http://www.epa.gov/oppefed1/models/water/index.htm.*

Surface water estimated drinking water concentrations (EDWCs) resulting from the Pesticide Root Zone Model/Exposure Analysis Modeling System (PRZM/EXAMS) were used in the dietary assessment, since they were higher than the EDWCs resulting from the Screening Concentration in Ground Water (SCI GROW). A distribution of 30-year daily surface water concentrations was estimated for the EDWCs of tebuconazole for acute exposures. The EDWC for chronic, noncancer exposure is estimated to be 59.0 μg/L for surface water.

3. *From non-dietary exposure.* The term ''residential exposure'' is used in this document to refer to non-occupational, non-dietary exposure (*e.g.*, for lawn and garden pest control, indoor pest control, termiticides, and flea and tick control on pets).

Tebuconazole has currently registered uses that could result in residential exposures. Short-term dermal and inhalation exposures are possible for residential adult handlers mixing, loading, and applying tebuconazole products outdoors to ornamental plants. Short- and intermediate-term dermal postapplication exposures are also possible to golfers from treated golf turf and to adults and children from contact to treated wood structures. Children may also be exposed via the incidental oral route when playing on treated wood structures. Long-term exposure is not expected. As a result, risk assessments have been completed for residential handler scenarios as well as residential post-application scenarios.

Further information regarding EPA standard assumptions and generic inputs for residential exposures may be found at *http://www.epa.gov/pesticides/trac/science/trac6a05.pdf.*

4. *Cumulative effects from substances with a common mechanism of toxicity.* Section 408(b)(2)(D)(v) of FFDCA requires that, when considering whether to establish, modify, or revoke a tolerance, the Agency consider ''available information'' concerning the cumulative effects of a particular pesticide's residues and ''other substances that have a common mechanism of toxicity.''

Tebuconazole is a member of the triazoles (and more specifically, triazole-derivative fungicides). Although triazoles act similarly in plants (fungi) by inhibiting ergosterol biosynthesis, there is not necessarily a relationship between their pesticidal activity and their mechanism of toxicity in mammals. Structural similarities do not constitute a common mechanism of toxicity. Evidence is needed to establish that the chemicals operate by the same, or essentially the same, sequence of major biochemical events. In triazole-

derivative fungicides, however, a variable pattern of toxicological responses is found: Some are hepatotoxic and hepatocarcinogenic in mice; some induce thyroid tumors in rats; and some induce developmental, reproductive, and neurological effects in rodents. Furthermore, the triazoles produce a diverse range of biochemical events including altered cholesterol levels, stress responses, and altered DNA methylation. It is not clearly understood whether these biochemical events are directly connected to their toxicological outcomes. Thus, there is currently no evidence to indicate that triazole-derivative fungicides share common mechanisms of toxicity and EPA is not following a cumulative risk approach based on a common mechanism of toxicity for the triazole-derivative fungicides. For information regarding EPA's procedures for cumulating effects from substances found to have a common mechanism of toxicity, see EPA's Web site at *http://www.epa.gov/pesticides/cumulative.*

However, the triazole-derivative fungicides can form the common metabolites 1,2,4-triazole and conjugated triazole metabolites. To support existing tolerances and to establish new tolerances for triazole-derivative fungicides, including tebuconazole, EPA conducted a human health risk assessment for exposure to 1,2,4-triazole, triazolylalanine, and triazolylacetic acid resulting from the use of all current and pending uses of any triazole-derivative fungicide. The risk assessment is a highly conservative, screening-level evaluation in terms of hazards associated with common metabolites (*e.g.*, use of a maximum combination of uncertainty factors) and potential dietary and non-dietary exposures (*i.e.*, high end estimates of both dietary and non-dietary exposures). In addition, the Agency retained the additional 10X FQPA safety factor for the protection of infants and children. The assessment includes evaluations of risks for various subgroups, including those comprised of infants and children. The Agency's complete risk assessment is found at *http://www.regulations.gov*, docket ID number EPA–HQ–OPP–2011–0120 in the document entitled ''Common Triazole Metabolites: Updated Dietary (Food + Water) Exposure and Risk Assessment to Address the Amended Metconazole Section 3 Registration to Add Uses on Tuberous and Corm Vegetables (Group 1C) and Bushberry Subgroup 13–07B''. This document updates another EPA risk assessment on triazole-derived pesticides which can be found in the reregistration docket for propiconazole at *http://www.regulations.gov*, docket ID number EPA–HQ–OPP–2005–0497.

D. Safety Factor for Infants and Children

1. *In general.* Section 408(b)(2)(C) of FFDCA provides that EPA shall apply an additional tenfold (10X) margin of safety for infants and children in the case of threshold effects to account for prenatal and postnatal toxicity and the completeness of the database on toxicity and exposure unless EPA determines based on reliable data that a different margin of safety will be safe for infants and children. This additional margin of safety is commonly referred to as the FQPA Safety Factor (SF). In applying this provision, EPA either retains the default value of 10X, or uses a different additional safety factor when reliable data available to EPA support the choice of a different factor.

2. *Prenatal and postnatal sensitivity.* The toxicity database for tebuconazole includes prenatal developmental toxicity studies in three species (mouse, rat, and rabbit), a reproductive toxicity study in rats, acute and subchronic neurotoxicity studies in rats, and a developmental neurotoxicity study in rats. The data from prenatal developmental toxicity studies in mice and a developmental neurotoxicity study in rats indicated an increased quantitative and qualitative susceptibility following *in utero* exposure to tebuconazole. The NOAELs/LOAELs for developmental toxicity in these studies were found at dose levels less than those that induce maternal toxicity or in the presence of slight maternal toxicity. There was no indication of increased quantitative susceptibility in the rat and rabbit developmental toxicity studies, the NOAELs for developmental toxicity were comparable to or higher than the NOAELs for maternal toxicity. In all three species, however, there was indication of increased qualitative susceptibility. For most studies, minimal maternal toxicity was seen at the LOAEL (consisting of increases in hematological findings in mice, increased liver weights in rabbits and rats, and decreased body weight gain/food consumption in rats) and did not increase substantially in severity at higher doses; however, there was more concern for the developmental effects at each LOAEL which included increases in runts, increased fetal loss, and malformations in mice, increased skeletal variations in rats, and increased fetal loss and frank malformations in rabbits. Additionally, more severe developmental effects (including frank malformations) were seen at higher doses in mice, rats and rabbits. In the developmental neurotoxicity study, maternal toxicity was seen only at the high dose (decreased body weights, body weight gains, and food consumption, prolonged gestation with mortality, and increased number of dead fetuses), while offspring toxicity (including decreases in body weight, brain weight, brain measurements and functional activities) was seen at all doses.

Available data indicated greater sensitivity of the developing organism to exposure to tebuconazole, as demonstrated by increases in qualitative sensitivity in prenatal developmental toxicity studies in rats, mice, and rabbits, and by increases in both qualitative and quantitative sensitivity in the developmental neurotoxicity study in rats with tebuconazole. However, the degree of concern is low because the toxic endpoints in the prenatal developmental toxicity studies were well characterized with clear NOAELs established and the most sensitive endpoint, which is found in the developmental neurotoxicity study, has been used for overall risk assessments. Therefore, there are no residual uncertainties for pre- and/or postnatal susceptibility.

3. *Conclusion.* The Agency has determined that reliable data show the safety of infants and children would be adequately protected if the FQPA SF were reduced to 3x for all potential exposure scenarios. The decision is based on the following findings:

i. The toxicity database for tebuconazole is complete with the exception of an immunotoxicity study requirement under the new 40 CFR part 158 guidelines for toxicity data. The available guideline studies do not suggest that tebuconazole directly targets the immune system. A peer-reviewed developmental neurotoxicity/immunotoxicity literature study found in high dose groups (60 mg/kg/day) increased spleen weights and alterations in splenic lymphocyte subpopulations. At the same dose there were no effects seen in the T-cell dependent antibody response to sheep red blood cells (SRBC) and natural killer (NK) cell activity indicating that tebuconazole did not alter the functional immune response in rats. Based on guideline and open literature, the overall weight of evidence suggests that tebuconazole does not directly target the immune system. The Agency does not believe that conducting a functional immunotoxicity study will result in a lower POD than currently used for overall risk assessment; therefore, a

database uncertainty factor (UFDB) is not needed to account for the lack of the study.

ii. Although there is qualitative evidence of increased susceptibility in the prenatal developmental studies in rats, the Agency did not identify any residual uncertainties after establishing toxicity endpoints and traditional UFs to be used in the risk assessment of tebuconazole. The degree of concern for residual uncertainties for prenatal and/or postnatal toxicity is low.

iii. A 3x FQPA safety factor is needed to address the failure to achieve a NOAEL in the developmental neurotoxicity (DNT) study. Reduction of the FQPA safety factor from 10x to 3x is based on a Benchmark Dose (BMD) analysis of the datasets relevant to the adverse offspring effects (decreased body weight, decreases in absolute brain weights, changes in brain morphometric parameters, and decreases in motor activity) seen at the LOAEL in the DNT study. The BMD analysis models or estimates the dose (BMD) associated with a specified measure or change (*e.g.* a dose representing a 10% change) of a biological effect over the control. All of the BMDLs (the lower limit of a one-sided 95% confidence interval on the BMD) modeled successfully on statistically significant effects are 1–2x lower than the LOAEL. The results indicate that the use of the FQPA safety factor of 3x would not underestimate risk. Using a 3x FQPA safety factor in the risk assessment (8.8 mg/kg/day ÷ 3x = 2.9 mg/kg/day) is further supported by the NOAELs established in other studies in the tebuconazole toxicity database [*i.e.,* 3 and 2.9 mg/kg/day, from a DNT study in mice and a chronic toxicity study in dogs, respectively (respective LOAELs 10 and 4.5 mg/kg/day)].

iv. There are no residual uncertainties identified in the exposure databases. Although the acute and chronic food exposure assessments are refined, EPA believes that the assessments are based on reliable data and will not underestimate exposure/risk. The drinking water estimates were derived from conservative screening models. The residential exposure assessment utilizes reasonable high-end variables set out in EPA's Occupational/Residential Exposure SOPs (Standard Operating Procedures). The aggregate assessment is based upon reasonable worst-case residential assumptions, and is also not likely to underestimate exposure/risk to any subpopulation, including those comprised of infants and children.

E. Aggregate Risks and Determination of Safety

EPA determines whether acute and chronic dietary pesticide exposures are safe by comparing aggregate exposure estimates to the acute PAD (aPAD) and chronic PAD (cPAD). For linear cancer risks, EPA calculates the lifetime probability of acquiring cancer given the estimated aggregate exposure. Short-, intermediate-, and chronic-term risks are evaluated by comparing the estimated aggregate food, water, and residential exposure to the appropriate PODs to ensure that an adequate MOE exists.

1. *Acute risk.* Using the exposure assumptions discussed in this unit for acute exposure, the acute dietary exposure from food and water to tebuconazole will occupy 33% of the aPAD for the U.S. population and 62% of the aPAD for the population group (children 3–5 years old) receiving the greatest exposure.

2. *Chronic risk.* Using the exposure assumptions described in this unit for chronic exposure, EPA has concluded that chronic exposure to tebuconazole from food and water will utilize 8.8% of the cPAD for the U.S. population and 16% of the cPAD for the most highly exposed population group (all infants (< 1 year old).

3. *Short-term risk.* Short-term aggregate exposure takes into account short-term residential exposure plus chronic exposure to food and water (considered to be a background exposure level). Tebuconazole is currently registered for uses that could result in short-term residential exposure, and the Agency has determined that it is appropriate to aggregate chronic exposure through food and water with short-term residential exposures to tebuconazole.

Using the exposure assumptions described in this unit for short term exposures, EPA has concluded that the short-term aggregate MOE from dietary exposure (food + drinking water) and non-occupational/residential handler exposure for adults using a hose-end sprayer on ornamentals is 370. The short-term aggregate MOE from dietary exposure and exposure from golfing is 1,900. The likelihood of a residential handler treating ornamentals with tebuconazole and then playing golf on a tebuconazole-treated course is considered low; therefore, each scenario is considered separately with background dietary exposure. The short-term aggregate MOE to children from dietary exposure and exposure from wood surfaces treated at the above ground use rate is 470. The short-term aggregate MOE to children from dietary exposure and exposure to wood surfaces treated at the below ground use rate is 220. The combined and aggregate MOEs for wood treated for below ground uses are lower than the target MOE (300) and thus indicate a potential risk of concern. However, the combined MOE for wood treated for above-ground uses is not lower than the target MOE, and therefore is not of concern. Exposure to above-ground wood is expected to more closely represent actual exposures to children. Frequency of exposures to above-ground wood should greatly exceed any exposures to below-ground wood, and exposures to below ground wood would be minimal, or negligible. It is unrealistic to expect a full duration of exposure to below ground wood. Therefore, EPA concludes that there is not a concern for short-term aggregate risk.

4. *Intermediate-term risk.* Intermediate-term aggregate exposure takes into account intermediate-term residential exposure plus chronic exposure to food and water (considered to be a background exposure level). Tebuconazole is currently registered for uses that could result in intermediate-term residential exposure, and the Agency has determined that it is appropriate to aggregate chronic exposure through food and water with intermediate-term residential exposures to tebuconazole. Since the POD, relevant exposure scenarios and exposure assumptions used for intermediate-term aggregate risk assessments are the same as those used for short-term aggregate risk assessments, the short-term aggregate risk assessments represent and are protective of both short and intermediate-term exposure durations.

5. *Aggregate cancer risk for U.S. population.* As discussed in this unit, the chronic risk assessment is considered to be protective of any cancer effects; therefore, because the chronic risk assessment indicates exposure is lower than the cPAD, tebuconazole does not pose a cancer risk of concern.

6. *Determination of safety.* Based on these risk assessments, EPA concludes that there is a reasonable certainty that no harm will result to the general population, or to infants and children from aggregate exposure to tebuconazole residues.

IV. Other Considerations

A. Analytical Enforcement Methodology

Adequate gas chromatography/nitrogen phosphorous detector (GC/NPD) and liquid chromatography/mass

spectrometry/mass spectrometry (LC/MS/MS) methods are available for both collecting and enforcing tolerances for tebuconazole and its metabolites in plant commodities, livestock matrices and processing studies. The methods have been adequately validated by an independent laboratory in conjunction with a previous petition. The method may be requested from: Chief, Analytical Chemistry Branch, Environmental Science Center, 701 Mapes Rd., Ft. Meade, MD 20755–5350; *telephone number:* (410) 305–2905; *e-mail address: residuemethods@epa.gov.*

B. International Residue Limits

Codex and Canada have established maximum residue limits (MRLs) for tebuconazole in/on a variety of plant and livestock commodities. The tolerance expression for tebuconazole is harmonized between U.S., Codex, and Canada. The proposed tolerances will harmonize established U.S. tolerances on oat and wheat with current Canadian MRLs.

There are currently no Codex MRLs for wheat and oats.

C. Revisions to Petitioned-For Tolerances

The Agency concluded that residues of tebuconazole do not concentrate in wheat bran, flour or middlings, but do concentrate in shorts and germ (2.5X). As a result, a tolerance in/on wheat, shorts and wheat, germ, each at 0.20 ppm (highest average field trial (HAFT) value = 0.08 ppm), is required.

V. Conclusion

Therefore, tolerances are established for residues of tebuconazole, in or on wheat, grain, and oat, grain at 0.15 ppm and wheat, shorts, and wheat, germ at 0.20 ppm.

VI. Statutory and Executive Order Reviews

This final rule establishes tolerances under section 408(d) of FFDCA in response to a petition submitted to the Agency. The Office of Management and Budget (OMB) has exempted these types of actions from review under Executive Order 12866, entitled *Regulatory Planning and Review* (58 FR 51735, October 4, 1993). Because this final rule has been exempted from review under Executive Order 12866, this final rule is not subject to Executive Order 13211, entitled *Actions Concerning Regulations That Significantly Affect Energy Supply, Distribution, or Use* (66 FR 28355, May 22, 2001) or Executive Order 13045, entitled *Protection of Children from Environmental Health Risks and Safety Risks* (62 FR 19885, April 23, 1997).

This final rule does not contain any information collections subject to OMB approval under the Paperwork Reduction Act (PRA), 44 U.S.C. 3501 *et seq.,* nor does it require any special considerations under Executive Order 12898, entitled *Federal Actions to Address Environmental Justice in Minority Populations and Low-Income Populations* (59 FR 7629, February 16, 1994).

Since tolerances and exemptions that are established on the basis of a petition under section 408(d) of FFDCA, such as the tolerance in this final rule, do not require the issuance of a proposed rule, the requirements of the Regulatory Flexibility Act (RFA) (5 U.S.C. 601 *et seq.*) do not apply.

This final rule directly regulates growers, food processors, food handlers, and food retailers, not States or tribes, nor does this action alter the relationships or distribution of power and responsibilities established by Congress in the preemption provisions of section 408(n)(4) of FFDCA. As such, the Agency has determined that this action will not have a substantial direct effect on States or tribal governments, on the relationship between the national government and the States or tribal governments, or on the distribution of power and responsibilities among the various levels of government or between the Federal Government and Indian tribes. Thus, the Agency has determined that Executive Order 13132, entitled *Federalism* (64 FR 43255, August 10, 1999) and Executive Order 13175, entitled *Consultation and Coordination with Indian Tribal Governments* (65 FR 67249, November 9, 2000) do not apply to this final rule. In addition, this final rule does not impose any enforceable duty or contain any unfunded mandate as described under Title II of the Unfunded Mandates Reform Act of 1995 (UMRA) (Pub. L. 104–4).

This action does not involve any technical standards that would require Agency consideration of voluntary consensus standards pursuant to section 12(d) of the National Technology Transfer and Advancement Act of 1995 (NTTAA), Public Law 104–113, section 12(d) (15 U.S.C. 272 note).

VII. Congressional Review Act

The Congressional Review Act, 5 U.S.C. 801 *et seq.,* generally provides that before a rule may take effect, the agency promulgating the rule must submit a rule report to each House of the Congress and to the Comptroller General of the United States. EPA will submit a report containing this rule and other required information to the U.S. Senate, the U.S. House of Representatives, and the Comptroller General of the United States prior to publication of this final rule in the **Federal Register**. This final rule is not a ''major rule'' as defined by 5 U.S.C. 804(2).

List of Subjects in 40 CFR Part 180

Environmental protection, Administrative practice and procedure, Agricultural commodities, Pesticides and pests, Reporting and recordkeeping requirements.

Dated: August 17, 2011.

Lois Rossi,

Director, Registration Division, Office of Pesticide Programs.

Therefore, 40 CFR chapter I is amended as follows:

PART 180—[AMENDED]

■ 1. The authority citation for part 180 continues to read as follows:

Authority: 21 U.S.C. 321(q), 346a and 371.

■ 2. Section 180.474, paragraph (a)(1) is amended by:

■ i. Revising the introductory text;

■ ii. Revising the entries for ''oat, grain'' and ''wheat, grain'' in the table; and

■ iii. Alphabetically adding entries for ''wheat, shorts'' and ''wheat, germ'' to the table.

The amendments read as follows:

§ 180.474 Tebuconazole; tolerances for residues.

(a) * * *

(1) Tolerances are established for residues of tebuconazole, alpha-[2-(4-chlorophenyl)ethyl]-alpha-(1,1-dimethylethyl)-1H-1,2,4-triazole-1-ethanol, including its metabolites and degradates, in or on the commodities in the table below. Compliance with the tolerance levels specified below is to be determined by measuring only tebuconazole [α-[2-(4-chlorophenyl) ethyl]-α-(1,1-dimethylethyl)-1H-1,2,4-triazole-1-ethanol], in or on the commodity.

Commodity	Parts per million
* * * *	*
Oat, grain	0.15
Wheat, grain	0.15
Wheat, shorts	0.20
Wheat, germ	0.20
* * * *	*

* * * * *

[FR Doc. 2011–22138 Filed 8–30–11; 8:45 am]

BILLING CODE 6560–50–P

DEPARTMENT OF HOMELAND SECURITY

Federal Emergency Management Agency

44 CFR Part 67

[Docket ID FEMA–2011–0002]

Final Flood Elevation Determinations

AGENCY: Federal Emergency Management Agency, DHS.

ACTION: Final rule.

SUMMARY: Base (1% annual-chance) Flood Elevations (BFEs) and modified BFEs are made final for the communities listed below. The BFEs and modified BFEs are the basis for the floodplain management measures that each community is required either to adopt or to show evidence of being already in effect in order to qualify or remain qualified for participation in the National Flood Insurance Program (NFIP).

DATES: The date of issuance of the Flood Insurance Rate Map (FIRM) showing BFEs and modified BFEs for each community. This date may be obtained by contacting the office where the maps are available for inspection as indicated in the table below.

ADDRESSES: The final BFEs for each community are available for inspection at the office of the Chief Executive Officer of each community. The respective addresses are listed in the table below.

FOR FURTHER INFORMATION CONTACT: Luis Rodriguez, Chief, Engineering Management Branch, Federal Insurance and Mitigation Administration, Federal Emergency Management Agency, 500 C Street, SW., Washington, DC 20472, (202) 646–4064, or (e-mail) *luis.rodriguez1@dhs.gov.*

SUPPLEMENTARY INFORMATION: The Federal Emergency Management Agency (FEMA) makes the final determinations listed below for the modified BFEs for each community listed. These modified elevations have been published in newspapers of local circulation and ninety (90) days have elapsed since that publication. The Deputy Federal Insurance and Mitigation Administrator has resolved any appeals resulting from this notification.

This final rule is issued in accordance with section 110 of the Flood Disaster Protection Act of 1973, 42 U.S.C. 4104, and 44 CFR part 67. FEMA has developed criteria for floodplain management in floodprone areas in accordance with 44 CFR part 60.

Interested lessees and owners of real property are encouraged to review the proof Flood Insurance Study and FIRM available at the address cited below for each community. The BFEs and modified BFEs are made final in the communities listed below. Elevations at selected locations in each community are shown.

National Environmental Policy Act. This final rule is categorically excluded from the requirements of 44 CFR part 10, Environmental Consideration. An environmental impact assessment has not been prepared.

Regulatory Flexibility Act. As flood elevation determinations are not within the scope of the Regulatory Flexibility Act, 5 U.S.C. 601–612, a regulatory flexibility analysis is not required.

Regulatory Classification. This final rule is not a significant regulatory action under the criteria of section 3(f) of Executive Order 12866 of September 30, 1993, Regulatory Planning and Review, 58 FR 51735.

Executive Order 13132, Federalism. This final rule involves no policies that have federalism implications under Executive Order 13132.

Executive Order 12988, Civil Justice Reform. This final rule meets the applicable standards of Executive Order 12988.

List of Subjects in 44 CFR Part 67

Administrative practice and procedure, Flood insurance, Reporting and recordkeeping requirements.

Accordingly, 44 CFR part 67 is amended as follows:

PART 67—[AMENDED]

■ 1. The authority citation for part 67 continues to read as follows:

Authority: 42 U.S.C. 4001 *et seq.;* Reorganization Plan No. 3 of 1978, 3 CFR, 1978 Comp., p. 329; E.O. 12127, 44 FR 19367, 3 CFR, 1979 Comp., p. 376.

§ 67.11 [Amended]

■ 2. The tables published under the authority of § 67.11 are amended as follows:

Flooding source(s)	Location of referenced elevation	* Elevation in feet (NGVD) + Elevation in feet (NAVD) # Depth in feet above ground ∧ Elevation in meters (MSL) Modified	Communities affected
Dubuque County, Iowa, and Incorporated Areas Docket No.: FEMA–B–1093			
Mississippi River	Approximately 11.1 miles downstream of the confluence with Catfish Creek.	+606	City of Dubuque, Unincorporated Areas of Dubuque County.
	Approximately 17.5 miles upstream of Lock and Dam 11	+616	

* National Geodetic Vertical Datum.
+ North American Vertical Datum.
# Depth in feet above ground.
∧ Mean Sea Level, rounded to the nearest 0.1 meter.

ADDRESSES

City of Dubuque

Maps are available for inspection at City Hall, 50 West 13th Street, Dubuque, IA 52001.

Unincorporated Areas of Dubuque County

Maps are available for inspection at 720 Central Avenue, Dubuque, IA 52001.

Flooding source(s)	Location of referenced elevation	* Elevation in feet (NGVD) + Elevation in feet (NAVD) # Depth in feet above ground ∧ Elevation in meters (MSL) Modified	Communities affected
Gratiot County, Michigan (All Jurisdictions) Docket No.: FEMA–B–1104			
Pine River Lower Reach	At Chessman Road	+724	Township of Pine River.
	Approximately 0.65 mile upstream of Chessman Road	+724	
Pine River Upper Reach	Approximately 0.77 mile upstream of State Street Dam	+735	Township of Arcada.
	Approximately 0.96 mile upstream of State Street Dam	+735	

* National Geodetic Vertical Datum.
+ North American Vertical Datum.
# Depth in feet above ground.
∧ Mean Sea Level, rounded to the nearest 0.1 meter.

ADDRESSES

Township of Arcada
Maps are available for inspection at the Arcada Township Hall, 3200 West Tyler Road, Alma, MI 48801.

Township of Pine River
Maps are available for inspection at the Pine River Township Hall, 1495 West Monroe Road, St. Louis, MI 48880.

Franklin County, Missouri, and Incorporated Areas Docket No.: FEMA–B–1108			
Birch Creek	Approximately 0.4 mile downstream of Denmark Road	+499	City of Union, Unincorporated Areas of Franklin County.
	Approximately 440 feet downstream of Prairie Dell Road	+543	
Bourbeuse River Tributary	Approximately 0.6 mile upstream of the confluence with Bourbeuse River.	+500	City of Union, Unincorporated Areas of Franklin County.
	Just downstream of Prairie Dell Road	+550	
Busch Creek	At the confluence with Dubois Creek	+480	City of Washington, Unincorporated Areas of Franklin County.
	Approximately 460 feet upstream of Schroeder Lane	+582	
Dubois Creek	Approximately 1,688 feet downstream of the confluence with Busch Creek.	+491	City of Washington, Unincorporated Areas of Franklin County.
	Just downstream of State Highway 100	+491	
Fiddle Creek	Approximately 165 feet downstream of Labadie Bottom Road.	+483	Unincorporated Areas of Franklin County.
	Approximately 0.8 mile upstream of County Highway T	+483	
Labadie Creek	At the confluence with the Missouri River	+485	Unincorporated Areas of Franklin County.
	Approximately 0.5 mile downstream of County Highway T	+486	
Little Tavern Creek	Approximately 1.0 mile downstream of County Highway T	+480	Unincorporated Areas of Franklin County.
	Approximately 0.5 mile downstream of County Highway T	+480	
Missouri River	Approximately 3.3 miles downstream of the confluence with Fiddle Creek.	+476	City of Berger, City of New Haven, City of Washington, Unincorporated Areas of Franklin County.
	Approximately 0.6 mile downstream of the confluence with Little Berger Creek.	+516	
Saint Johns Creek	Approximately 1.2 miles downstream of West Link Drive	+495	City of Washington, Unincorporated Areas of Franklin County.
	Approximately 1,475 feet downstream of State Highway 100.	+495	
South Branch Busch Creek	At the confluence with Busch Creek	+491	City of Washington, Unincorporated Areas of Franklin County.
	Approximately 0.8 mile upstream of State Highway 100	+500	
Southwest Branch Busch Creek	At the confluence with Busch Creek	+493	City of Washington, Unincorporated Areas of Franklin County.
	Approximately 0.5 mile upstream of State Highway 47	+514	

Flooding source(s)	Location of referenced elevation	* Elevation in feet (NGVD) + Elevation in feet (NAVD) # Depth in feet above ground ∧ Elevation in meters (MSL) Modified	Communities affected
Unnamed Tributary to Busch Creek.	At the confluence with Busch Creek	+537	City of Washington, Unincorporated Areas of Franklin County.
	Approximately 1,520 feet upstream of State Highway 100	+552	

* National Geodetic Vertical Datum.
+ North American Vertical Datum.
# Depth in feet above ground.
∧ Mean Sea Level, rounded to the nearest 0.1 meter.

ADDRESSES

City of Berger
Maps are available for inspection at 405 Rosalie Avenue, Berger, MO 63014.

City of New Haven
Maps are available for inspection at 101 Front Street, New Haven, MO 63068.

City of Union
Maps are available for inspection at 500 East Locust Street, Union, MO 63084.

City of Washington
Maps are available for inspection at 405 Jefferson Street, Washington, MO 63090.

Unincorporated Areas of Franklin County
Maps are available for inspection at 8 North Church Street, Suite B, Union, MO 63084.

Park County, Montana, and Incorporated Areas
Docket No.: FEMA–B–1140

Yellowstone River	Approximately 3.26 miles downstream of Northern Pacific Railroad.	+4357	City of Livingston, Unincorporated Areas of Park County.
	Approximately 4.14 miles downstream of Tom Miner Creek Road.	+4953	
Yellowstone River East Branch	Approximately 0.76 mile downstream of I–90	+4493	City of Livingston, Unincorporated Areas of Park County.
	Approximately 0.94 mile upstream of I–90	+4519	

* National Geodetic Vertical Datum.
+ North American Vertical Datum.
# Depth in feet above ground.
∧ Mean Sea Level, rounded to the nearest 0.1 meter.

ADDRESSES

City of Livingston
Maps are available for inspection at 414 East Callender Street, Livingston, MT 59047.

Unincorporated Areas of Park County
Maps are available for inspection at 414 East Callender Street, Livingston, MT 59047.

Holmes County, Ohio, and Incorporated Areas
Docket No.: FEMA–B–1128

Killbuck Creek	Just downstream of U.S. Route 62	+807	Unincorporated Areas of Holmes County, Village of Killbuck.
	Just upstream of Township Road 91	+811	

* National Geodetic Vertical Datum.
+ North American Vertical Datum.
# Depth in feet above ground.
∧ Mean Sea Level, rounded to the nearest 0.1 meter.

ADDRESSES

Unincorporated Areas of Holmes County
Maps are available for inspection at 2 Court Street, Millersburg, OH 44654.

Village of Killbuck
Maps are available for inspection at 451 South Railroad Street, Killbuck, OH 44637.

Flooding source(s)	Location of referenced elevation	* Elevation in feet (NGVD) + Elevation in feet (NAVD) # Depth in feet above ground ∧ Elevation in meters (MSL) Modified	Communities affected
Marion County, South Carolina, and Incorporated Areas Docket No.: FEMA–B–1144			
Little Pee Dee River	Just upstream of Drama Court extended	+28	Unincorporated Areas of Marion County.
	Just downstream of U.S. Route 76	+51	
Sellers Branch	Approximately 250 feet downstream of Church Street	+72	Town of Sellers, Unincorporated Areas of Marion County.
	Approximately 1,500 feet upstream of Main Street	+85	
White Oak Creek Tributary 1.1	At the confluence with White Oak Creek Tributary 1	+84	City of Mullins.
	Approximately 50 feet downstream of Lowman Street	+95	

* National Geodetic Vertical Datum.
+ North American Vertical Datum.
# Depth in feet above ground.
∧ Mean Sea Level, rounded to the nearest 0.1 meter.

ADDRESSES

City of Mullins
Maps are available for inspection at 151 East Front Street, Mullins, SC 29574.

Town of Sellers
Maps are available for inspection at 2552 U.S. Route 301, Sellers, SC 29592.

Unincorporated Areas of Marion County
Maps are available for inspection at 1305 North Main Street, Marion, SC 29571.

(Catalog of Federal Domestic Assistance No. 97.022, ''Flood Insurance.'')

Dated: August 19, 2011.

Sandra K. Knight,

Deputy Federal Insurance and Mitigation Administrator, Mitigation, Department of Homeland Security, Federal Emergency Management Agency.

[FR Doc. 2011–22252 Filed 8–30–11; 8:45 am]

BILLING CODE 9110–12–P

DEPARTMENT OF COMMERCE

National Oceanic and Atmospheric Administration

50 CFR Part 679

[Docket No. 101126521–0640–02]

RIN 0648–XA673

Fisheries of the Exclusive Economic Zone Off Alaska; Reallocation of Pacific Cod in the Bering Sea and Aleutian Islands Management Area

AGENCY: National Marine Fisheries Service (NMFS), National Oceanic and Atmospheric Administration (NOAA), Commerce.

ACTION: Temporary rule; reallocation.

SUMMARY: NMFS is reallocating the projected unused amounts of Pacific cod from catcher vessels using trawl gear and catcher vessels greater than or equal to 60 feet (18.3 meters (m)) length overall (LOA) using hook-and-line gear to catcher vessels less than 60 feet (18.3 m) LOA using hook-and-line or pot gear in the Bering Sea and Aleutian Islands management area (BSAI). This action is necessary to allow the 2011 total allowable catch of Pacific cod in the BSAI to be harvested.

DATES: Effective September 1, 2011, through 2400 hrs, Alaska local time (A.l.t.), December 31, 2011.

FOR FURTHER INFORMATION CONTACT: Josh Keaton, 907–586–7228.

SUPPLEMENTARY INFORMATION: NMFS manages the groundfish fishery in the BSAI according to the Fishery Management Plan for Groundfish of the Bering Sea and Aleutian Islands Management Area (FMP) prepared by the North Pacific Fishery Management Council under authority of the Magnuson-Stevens Fishery Conservation and Management Act. Regulations governing fishing by U.S. vessels in accordance with the FMP appear at subpart H of 50 CFR part 600 and 50 CFR part 679.

The 2011 Pacific cod total allowable catch (TAC) specified for vessels using trawl gear in the BSAI is 43,687 metric tons (mt) as established by the final 2011 and 2012 harvest specifications for groundfish in the BSAI (76 FR 11139, March 1, 2011) and reallocation (76 FR 29671, May 23, 2011).

The Administrator, Alaska Region, NMFS, has determined that trawl catcher vessels will not be able to harvest 1,290 mt of the 2011 Pacific cod TAC allocated to those vessels under § 679.20(a)(7)(ii)(A)(*9*). Therefore, in accordance with § 679.20(a)(7)(iii)(A), NMFS reallocates 1,290 mt of Pacific cod from trawl catcher vessels to catcher vessels less than 60 feet (18.3 m) LOA using hook-and-line or pot gear.

The 2011 Pacific cod total allowable catch (TAC) specified for catcher vessels greater than or equal to 60 feet (18.3 m) LOA using hook-and-line gear in the BSAI is 225 mt as established by the final 2011 and 2012 harvest specifications for groundfish in the BSAI (76 FR 11139, March 1, 2011) and reallocation (76 FR 24403, May 2, 2011).

The Administrator, Alaska Region, NMFS, has determined that catcher vessels greater than or equal to 60 feet (18.3 m) LOA using hook-and-line gear will not be able to harvest 210 mt of the 2011 Pacific cod TAC allocated to those vessels under § 679.20(a)(7)(ii)(A)(*3*). Therefore, in accordance with § 679.20(a)(7)(iii)(A), NMFS reallocatess 210 mt of Pacific cod from catcher vessels greater than or equal to 60 feet (18.3 m) LOA using hook-and-line gear

to catcher vessels less than 60 feet LOA using hook-and-line or pot gear.

The harvest specifications for Pacific cod included in the final 2011 harvest specifications for groundfish in the BSAI (76 FR 11139, March 1, 2011) are revised as follows: 42,397 mt to catcher vessels using trawl gear, 15 mt to catcher vessels greater than or equal to 60 feet (18.3 m) LOA using hook-and-line gear and 9,005 mt to catcher vessels less than 60 feet (18.3 m) LOA using hook-and-line or pot gear.

Classification

This action responds to the best available information recently obtained from the fishery. The Assistant Administrator for Fisheries, NOAA (AA), finds good cause to waive the requirement to provide prior notice and opportunity for public comment pursuant to the authority set forth at 5 U.S.C. 553(b)(B) as such requirement is impracticable and contrary to the public interest. This requirement is impracticable and contrary to the public interest as it would prevent NMFS from responding to the most recent fisheries data in a timely fashion and would delay the reallocation of Pacific cod to catcher vessels less than 60 feet LOA using hook-and-line or pot gear. Since the fishery is currently open, it is important to immediately inform the industry as to the revised allocations. Immediate notification is necessary to allow for the orderly conduct and efficient operation of this fishery, to allow the industry to plan for the fishing season, and to avoid potential disruption to the fishing fleet as well as processors. NMFS was unable to publish a notice providing time for public comment because the most recent, relevant data only became available as of August 23, 2011.

The AA also finds good cause to waive the 30-day delay in the effective date of this action under 5 U.S.C. 553(d)(3). This finding is based upon the reasons provided above for waiver of prior notice and opportunity for public comment.

This action is required by § 679.20 and is exempt from review under Executive Order 12866.

Authority: 16 U.S.C. 1801 *et seq.*

Dated: August 26, 2011.

James P. Burgess,

Acting Director, Office of Sustainable Fisheries, National Marine Fisheries Service.

[FR Doc. 2011–22310 Filed 8–30–11; 8:45 am]

BILLING CODE 3510–22–P

Proposed Rules

Federal Register
Vol. 76, No. 169
Wednesday, August 31, 2011

This section of the FEDERAL REGISTER contains notices to the public of the proposed issuance of rules and regulations. The purpose of these notices is to give interested persons an opportunity to participate in the rule making prior to the adoption of the final rules.

DEPARTMENT OF TRANSPORTATION

Federal Aviation Administration

14 CFR Part 39

[Docket No. FAA–2011–0911; Directorate Identifier 2010–NM–248–AD]

RIN 2120–AA64

Airworthiness Directives; BAE SYSTEMS (Operations) Limited Model 4101 Airplanes

AGENCY: Federal Aviation Administration (FAA), DOT.

ACTION: Notice of proposed rulemaking (NPRM).

SUMMARY: We propose to adopt a new airworthiness directive (AD) for the products listed above. This proposed AD results from mandatory continuing airworthiness information (MCAI) originated by an aviation authority of another country to identify and correct an unsafe condition on an aviation product. The MCAI describes the unsafe condition as:

A door failure mode has been reported by an operator.

Investigation has shown that the passenger/crew entry door pin-guide plates can fail prior to the expected fatigue life. A metallurgical examination of the failed component (lower guide plate) concluded that the occurred failure was due to exfoliation corrosion.

The current inspection regime is not adequate to identify early stages of this corrosion.

This condition, if not corrected, can lead to the sudden depressurisation of the aeroplane and consequently may injure the occupants.

* * * * *

The proposed AD would require actions that are intended to address the unsafe condition described in the MCAI.

DATES: We must receive comments on this proposed AD by October 17, 2011.

ADDRESSES: You may send comments by any of the following methods:

- *Federal eRulemaking Portal:* Go to *http://www.regulations.gov.* Follow the instructions for submitting comments.
- *Fax:* (202) 493–2251.
- *Mail:* U.S. Department of Transportation, Docket Operations, M–30, West Building Ground Floor, Room W12–140, 1200 New Jersey Avenue, SE., Washington, DC 20590.
- *Hand Delivery:* U.S. Department of Transportation, Docket Operations, M–30, West Building Ground Floor, Room W12–40, 1200 New Jersey Avenue, SE., Washington, DC, between 9 a.m. and 5 p.m., Monday through Friday, except Federal holidays.

For service information identified in this proposed AD, contact BAE SYSTEMS (Operations) Limited, Customer Information Department, Prestwick International Airport, Ayrshire, KA9 2RW, Scotland, United Kingdom; telephone +44 1292 675207; fax +44 1292 675704; e-mail *RApublications@baesystems.com;* Internet *http://www.baesystems.com/Businesses/RegionalAircraft/index.htm.* You may review copies of the referenced service information at the FAA, Transport Airplane Directorate, 1601 Lind Avenue, SW., Renton, Washington. For information on the availability of this material at the FAA, call 425–227–1221.

Examining the AD Docket

You may examine the AD docket on the Internet at *http://www.regulations.gov;* or in person at the Docket Operations office between 9 a.m. and 5 p.m., Monday through Friday, except Federal holidays. The AD docket contains this proposed AD, the regulatory evaluation, any comments received, and other information. The street address for the Docket Operations office (telephone (800) 647–5527) is in the **ADDRESSES** section. Comments will be available in the AD docket shortly after receipt.

FOR FURTHER INFORMATION CONTACT: Todd Thompson, Aerospace Engineer, International Branch, ANM–116, Transport Airplane Directorate, FAA, 1601 Lind Avenue, SW., Renton, Washington 98057–3356; telephone (425) 227–1175; fax (425) 227–1149.

SUPPLEMENTARY INFORMATION:

Comments Invited

We invite you to send any written relevant data, views, or arguments about this proposed AD. Send your comments to an address listed under the **ADDRESSES** section. Include ''Docket No. FAA–2011–0911; Directorate Identifier 2010–NM–248–AD'' at the beginning of your comments. We specifically invite comments on the overall regulatory, economic, environmental, and energy aspects of this proposed AD. We will consider all comments received by the closing date and may amend this proposed AD based on those comments.

We will post all comments we receive, without change, to *http://www.regulations.gov*, including any personal information you provide. We will also post a report summarizing each substantive verbal contact we receive about this proposed AD.

Discussion

The European Aviation Safety Agency (EASA), which is the Technical Agent for the Member States of the European Community, has issued EASA Airworthiness Directive 2010–0179, dated August 30, 2010 (referred to after this as ''the MCAI''), to correct an unsafe condition for the specified products. The MCAI states:

A door failure mode has been reported by an operator.

Investigation has shown that the passenger/crew entry door pin-guide plates can fail prior to the expected fatigue life. A metallurgical examination of the failed component (lower guide plate) concluded that the occurred failure was due to exfoliation corrosion.

The current inspection regime is not adequate to identify early stages of this corrosion.

This condition, if not corrected, can lead to the sudden depressurisation of the aeroplane and consequently may injure the occupants.

For the reasons described above, this [EASA] AD requires immediate and periodic ultrasonic inspections [for a split caused by exfoliation corrosion] of the door pin guides and the accomplishment of the relevant corrective actions [replacing the affected guideplates] as necessary.

You may obtain further information by examining the MCAI in the AD docket.

Relevant Service Information

BAE SYSTEMS (Operations) Limited has issued Service Bulletin J41–52–064, dated September 15, 2009. The actions described in this service information are intended to correct the unsafe condition identified in the MCAI.

FAA's Determination and Requirements of This Proposed AD

This product has been approved by the aviation authority of another country, and is approved for operation in the United States. Pursuant to our bilateral agreement with the State of Design Authority, we have been notified of the unsafe condition described in the MCAI and service information referenced above. We are proposing this AD because we evaluated all pertinent information and determined an unsafe condition exists and is likely to exist or develop on other products of the same type design.

Differences Between This AD and the MCAI or Service Information

We have reviewed the MCAI and related service information and, in general, agree with their substance. But we might have found it necessary to use different words from those in the MCAI to ensure the AD is clear for U.S. operators and is enforceable. In making these changes, we do not intend to differ substantively from the information provided in the MCAI and related service information.

We might also have proposed different actions in this AD from those in the MCAI in order to follow FAA policies. Any such differences are highlighted in a NOTE within the proposed AD.

Costs of Compliance

Based on the service information, we estimate that this proposed AD would affect about 2 products of U.S. registry. We also estimate that it would take about 2 work-hours per product to comply with the basic requirements of this proposed AD. The average labor rate is $85 per work-hour. Based on these figures, we estimate the cost of the proposed AD on U.S. operators to be $340, or $170 per product.

In addition, we estimate that any necessary follow-on actions would take about 2 work-hours and require parts costing $525, for a cost of $1,050 per product. We have no way of determining the number of products that may need these actions.

Authority for This Rulemaking

Title 49 of the United States Code specifies the FAA's authority to issue rules on aviation safety. Subtitle I, section 106, describes the authority of the FAA Administrator. ''Subtitle VII: Aviation Programs,'' describes in more detail the scope of the Agency's authority.

We are issuing this rulemaking under the authority described in ''Subtitle VII, part A, subpart III, Section 44701: General requirements.'' Under that section, Congress charges the FAA with promoting safe flight of civil aircraft in air commerce by prescribing regulations for practices, methods, and procedures the Administrator finds necessary for safety in air commerce. This regulation is within the scope of that authority because it addresses an unsafe condition that is likely to exist or develop on products identified in this rulemaking action.

Regulatory Findings

We determined that this proposed AD would not have federalism implications under Executive Order 13132. This proposed AD would not have a substantial direct effect on the States, on the relationship between the national Government and the States, or on the distribution of power and responsibilities among the various levels of government.

For the reasons discussed above, I certify this proposed regulation:

1. Is not a ''significant regulatory action'' under Executive Order 12866;

2. Is not a ''significant rule'' under the DOT Regulatory Policies and Procedures (44 FR 11034, February 26, 1979); and

3. Will not have a significant economic impact, positive or negative, on a substantial number of small entities under the criteria of the Regulatory Flexibility Act.

We prepared a regulatory evaluation of the estimated costs to comply with this proposed AD and placed it in the AD docket.

List of Subjects in 14 CFR Part 39

Air transportation, Aircraft, Aviation safety, Incorporation by reference, Safety.

The Proposed Amendment

Accordingly, under the authority delegated to me by the Administrator, the FAA proposes to amend 14 CFR part 39 as follows:

PART 39—AIRWORTHINESS DIRECTIVES

1. The authority citation for part 39 continues to read as follows:

Authority: 49 U.S.C. 106(g), 40113, 44701.

§ 39.13 [Amended]

2. The FAA amends § 39.13 by adding the following new AD:

BAE SYSTEMS (Operations) Limited: Docket No. FAA–2011–0911; Directorate Identifier 2010–NM–248–AD.

Comments Due Date

(a) We must receive comments by October 17, 2011.

Affected ADs

(b) None.

Applicability

(c) This AD applies to all BAE SYSTEMS (Operations) Limited Model 4101 airplanes; certificated in any category.

Subject

(d) Air Transport Association (ATA) of America Code 52: Doors.

Reason

(e) The mandatory continuing airworthiness information (MCAI) states:

A door failure mode has been reported by an operator.

Investigation has shown that the passenger/crew entry door pin-guide plates can fail prior to the expected fatigue life. A metallurgical examination of the failed component (lower guide plate) concluded that the occurred failure was due to exfoliation corrosion.

The current inspection regime is not adequate to identify early stages of this corrosion.

This condition, if not corrected, can lead to the sudden depressurisation of the aeroplane and consequently may injure the occupants.

* * * * *

Compliance

(f) You are responsible for having the actions required by this AD performed within the compliance times specified, unless the actions have already been done.

Actions

(g) Within 6 months after the effective date of this AD, do an ultrasonic inspection of the passenger/crew door upper and lower guide plates for a split caused by exfoliation corrosion, in accordance with the Accomplishment Instructions of BAE SYSTEMS (Operations) Limited Service Bulletin J41–52–064, dated September 15, 2009. Repeat the ultrasonic inspection, thereafter, at intervals not to exceed 48 Months.

(h) If a split caused by exfoliation corrosion of an area of 78mm^2 (0.12 in.^{2}) or greater is found during any ultrasonic inspection required by paragraph (g) of this AD: Before further flight, replace any affected guide plates with a serviceable guide plate, in accordance with the Accomplishment Instructions of BAE SYSTEMS (Operations) Limited Service Bulletin J41–52–064, dated September 15, 2009.

FAA AD Differences

Note 1: This AD differs from the MCAI and/or service information as follows: No differences.

Other FAA AD Provisions

(i) The following provisions also apply to this AD:

(1) *Alternative Methods of Compliance (AMOCs):* The Manager, International Branch, ANM–116, FAA, has the authority to approve AMOCs for this AD, if requested using the procedures found in 14 CFR 39.19. In accordance with 14 CFR 39.19, send your

request to your principal inspector or local Flight Standards District Office, as appropriate. If sending information directly to the International Branch, send it to ATTN: Todd Thompson, Aerospace Engineer, International Branch, ANM–116, Transport Airplane Directorate, FAA, 1601 Lind Avenue, SW., Renton, Washington 98057–3356; telephone (425) 227–1175; fax (425) 227–1149. Information may be e-mailed to: *9-ANM-116-AMOC-REQUESTS@faa.gov.* Before using any approved AMOC, notify your appropriate principal inspector, or lacking a principal inspector, the manager of the local flight standards district office/certificate holding district office. The AMOC approval letter must specifically reference this AD.

(2) *Airworthy Product:* For any requirement in this AD to obtain corrective actions from a manufacturer or other source, use these actions if they are FAA-approved. Corrective actions are considered FAA-approved if they are approved by the State of Design Authority (or their delegated agent). You are required to assure the product is airworthy before it is returned to service.

Related Information

(j) Refer to MCAI European Aviation Safety Agency Airworthiness Directive 2010–0179, dated August 30, 2010; and BAE SYSTEMS (Operations) Limited Service Bulletin J41–52–064, dated September 15, 2009; for related information.

Issued in Renton, Washington, on August 23, 2011.

Ali Bahrami,

Manager, Transport Airplane Directorate, Aircraft Certification Service.

[FR Doc. 2011–22224 Filed 8–30–11; 8:45 am]

BILLING CODE 4910–13–P

DEPARTMENT OF TRANSPORTATION

Federal Aviation Administration

14 CFR Part 39

[Docket No. FAA–2011–0913; Directorate Identifier 2011–NM–031–AD]

RIN 2120–AA64

Airworthiness Directives; Cessna Aircraft Company Model 680 Airplanes

AGENCY: Federal Aviation Administration (FAA), DOT.

ACTION: Notice of proposed rulemaking (NPRM).

SUMMARY: We propose to adopt a new airworthiness directive (AD) for the products listed above. This proposed AD would require adding diodes to the fuel cross-feed wiring, and revising the airplane flight manual to include procedures to use when the left or right generator is selected OFF. This proposed AD was prompted by a false cross-feed command to the right-hand fuel control card, due to the cross-feed inputs on the left- and right-hand fuel control cards being connected together and causing an imbalance of fuel between the left and right wing tanks. We are proposing this AD to prevent lateral imbalance of the airplane, which can be corrected by deflecting the aileron trim, but which increases the pilot's workload. Uncontrolled fuel cross-feed results in lateral imbalance that could exceed the airplane's limitation in a short period of time. Exceeding the lateral imbalance limit could result in reduced control of the airplane.

DATES: We must receive comments on this proposed AD by October 17, 2011.

ADDRESSES: You may send comments by any of the following methods:

- *Federal eRulemaking Portal:* Go to *http://www.regulations.gov.* Follow the instructions for submitting comments.
- *Fax:* 202–493–2251.
- *Mail:* U.S. Department of Transportation, Docket Operations, M–30, West Building Ground Floor, Room W12–140, 1200 New Jersey Avenue, SE., Washington, DC 20590.
- *Hand Delivery:* Deliver to Mail address above between 9 a.m. and 5 p.m., Monday through Friday, except Federal holidays.

For service information identified in this proposed AD, contact Cessna Aircraft Co., P.O. Box 7706, Wichita, Kansas 67277; telephone 316–517–6215; fax 316–517–5802; e-mail *citationpubs@cessna.textron.com;* Internet *https://www.cessnasupport.com/newlogin.html.* You may review copies of the referenced service information at the FAA, Transport Airplane Directorate, 1601 Lind Avenue, SW., Renton, Washington. For information on the availability of this material at the FAA, call 425–227–1221.

Examining the AD Docket

You may examine the AD docket on the Internet at *http://www.regulations.gov;* or in person at the Docket Management Facility between 9 a.m. and 5 p.m., Monday through Friday, except Federal holidays. The AD docket contains this proposed AD, the regulatory evaluation, any comments received, and other information. The street address for the Docket Office (*phone:* 800–647–5527) is in the **ADDRESSES** section. Comments will be available in the AD docket shortly after receipt.

FOR FURTHER INFORMATION CONTACT: Nhien Hoang, Aerospace Engineer, Electrical Systems and Avionics Branch, ACE–119W, FAA, Wichita Aircraft Certification Office, 1801 Airport Road, Room 100, Mid-Continent Airport, Wichita, Kansas 67209; *phone:* (316) 946–4190; *fax:* (316) 946–4107; *e-mail: nhien.hoang@faa.gov.*

SUPPLEMENTARY INFORMATION:

Comments Invited

We invite you to send any written relevant data, views, or arguments about this proposal. Send your comments to an address listed under the **ADDRESSES** section. Include ''Docket No. FAA–2011–0913; Directorate Identifier 2011–NM–031–AD'' at the beginning of your comments. We specifically invite comments on the overall regulatory, economic, environmental, and energy aspects of this proposed AD. We will consider all comments received by the closing date and may amend this proposed AD because of those comments.

We will post all comments we receive, without change, to *http://www.regulations.gov,* including any personal information you provide. We will also post a report summarizing each substantive verbal contact we receive about this proposed AD.

Discussion

We received a report that a Model 680 airplane in flight displayed a DC EMER BUS L amber crew alerting system (CAS) message. Per the emergency/abnormal procedures checklist, the flightcrew identified a fault on the left main electrical bus and selected the left generator to OFF.

The co-pilot (flying the airplane due to the pilot's primary flight display being disabled by the left generator OFF, which also disabled the left fuel quantity indication) observed that an increasing amount of right aileron control input was required to maintain a wings-level attitude.

After the airplane safely landed, investigation showed that the left tank had 5,500 pounds of fuel (full) and the right tank 3,300 pounds. The flightcrew confirmed it had not selected the fuel cross-feed during flight. During the 20 minutes that elapsed between selecting the left generator OFF and landing, sufficient fuel had migrated from the right to the left tank creating an imbalance of 2,200 pounds. The maximum permissible fuel imbalance for this airplane is 400 pounds.

Loss of power on the left main electrical bus results in a false cross-feed command to the right-hand fuel control card, due to the cross-feed inputs on the left- and right-hand fuel control cards being connected together, thereby causing an imbalance of fuel between the left and right wing tanks.

This condition, if not corrected, could result in lateral imbalance of the airplane, which can be corrected by deflecting the aileron trim, but which increases the pilot's workload. Uncontrolled fuel cross-feed results in lateral imbalance that will exceed the airplane's limitation in a short period of time. Exceeding the lateral imbalance limit could result in reduced control of the airplane.

Relevant Service Information

We reviewed Cessna Service Bulletin SB680–24–11, including Service Bulletin Supplemental Data, dated December 16, 2010, which describes procedures for adding diodes to the fuel cross-feed wiring. We have also reviewed Cessna Temporary FAA Approved Airplane Flight Manual Change 68FM TC–R09–13, dated October 15, 2010, to the Cessna 680 Citation Sovereign Airplane Flight Manual, which introduces procedures to use when the left or right generator is selected OFF.

FAA's Determination

We are proposing this AD because we evaluated all the relevant information and determined the unsafe condition described previously is likely to exist or develop in other products of this same type design.

Proposed AD Requirements

This proposed AD would require accomplishing the actions specified in the service information described previously.

Costs of Compliance

We estimate that this proposed AD affects 198 airplanes of U.S. registry.

We estimate the following costs to comply with this proposed AD:

ESTIMATED COSTS

Action	Labor cost	Parts cost	Cost per product	Cost on U.S. operators
Installation	4 work-hours × $85 per hour = $340	$40	$380	$75,240

Authority for This Rulemaking

Title 49 of the United States Code specifies the FAA's authority to issue rules on aviation safety. subtitle I, section 106, describes the authority of the FAA Administrator. subtitle VII: Aviation Programs, describes in more detail the scope of the Agency's authority.

We are issuing this rulemaking under the authority described in subtitle VII, part A, subpart III, Section 44701: ''General requirements.'' Under that section, Congress charges the FAA with promoting safe flight of civil aircraft in air commerce by prescribing regulations for practices, methods, and procedures the Administrator finds necessary for safety in air commerce. This regulation is within the scope of that authority because it addresses an unsafe condition that is likely to exist or develop on products identified in this rulemaking action.

Regulatory Findings

We determined that this proposed AD would not have federalism implications under Executive Order 13132. This proposed AD would not have a substantial direct effect on the States, on the relationship between the national Government and the States, or on the distribution of power and responsibilities among the various levels of government.

For the reasons discussed above, I certify this proposed regulation:

(1) Is not a ''significant regulatory action'' under Executive Order 12866,

(2) Is not a ''significant rule'' under the DOT Regulatory Policies and Procedures (44 FR 11034, February 26, 1979),

(3) Will not affect intrastate aviation in Alaska, and

(4) Will not have a significant economic impact, positive or negative, on a substantial number of small entities under the criteria of the Regulatory Flexibility Act.

List of Subjects in 14 CFR Part 39

Air transportation, Aircraft, Aviation safety, Incorporation by reference, Safety.

The Proposed Amendment

Accordingly, under the authority delegated to me by the Administrator, the FAA proposes to amend 14 CFR part 39 as follows:

PART 39—AIRWORTHINESS DIRECTIVES

1. The authority citation for part 39 continues to read as follows:

Authority: 49 U.S.C. 106(g), 40113, 44701.

§ 39.13 [Amended]

2. The FAA amends § 39.13 by adding the following new airworthiness directive (AD):

Cessna Aircraft Company: Docket No. FAA–2011–0913; Directorate Identifier 2011–NM–031–AD.

Comments Due Date

(a) We must receive comments by October 17, 2011.

Affected ADs

(b) None.

Applicability

(c) This AD applies to Cessna Aircraft Company Model 680 airplanes, certificated in any category, serial numbers –0001 through –0289 inclusive, and –0291 through –0296 inclusive.

Subject

(d) Joint Aircraft System Component (JASC)/Air Transport Association (ATA) of America Code 24: Electrical power.

Unsafe Condition

(e) This AD was prompted by a false cross-feed command to the right-hand fuel control card, due to the cross-feed inputs on the left- and right-hand fuel control cards being connected together and causing an imbalance of fuel between the left and right wing tanks. We are issuing this AD to prevent lateral imbalance of the airplane, which can be corrected by deflecting the aileron trim, but which increases the pilot's workload. Uncontrolled fuel cross-feed results in lateral imbalance that could exceed the airplane's limitation in a short period of time and result in reduced controllability of the airplane.

Compliance

(f) Comply with this AD within the compliance times specified, unless already done.

Installation

(g) Within 400 flight hours or 12 months after the effective date of this AD, whichever occurs first: Install a kit, part number (P/N) SB680–24–11, to the left and right motive flow relays, in accordance with the Accomplishment Instructions of Cessna Service Bulletin SB680–24–11, dated December 16, 2010. The kit (P/N SB680–24–11) contains 2 sleeves, 4 splices, 2 diodes (P/N 1N4006), and instructions.

(h) Before further flight after accomplishing the actions required by paragraph (g) of this AD: Revise the Cessna 680 Citation Sovereign Airplane Flight Manual (AFM) to include the information in Cessna Temporary FAA Approved Airplane Flight Manual Change 68FM TC–R09–13, dated October 15, 2010, and remove the Temporary Changes (TCs)

identified in table 1 of this AD. Cessna Temporary FAA Approved Airplane Flight Manual Change 68FM TC–R09–13, dated October 15, 2010, introduces procedures to use when the left or right generator is selected OFF. Operate the airplane according to the procedures in Cessna Temporary FAA Approved Airplane Flight Manual Change 68FM TC–R09–13, dated October 15, 2010.

TABLE 1—TCS TO REMOVE FROM THE CESSNA 680 AFM

Cessna TCs—	Dated—
68FM TC–R09–09	October 15, 2010.
68FM TC–R09–10	October 15, 2010.
68FM TC–R09–11	October 15, 2010.
68FM TC–R09–12	October 15, 2010.

Note 1: Updating the Cessna 680 Citation Sovereign AFM may be done by inserting a copy of Cessna Temporary FAA Approved Airplane Flight Manual Change 68FM TC–R09–13, dated October 15, 2010, into the AFM. When this TC has been included in general revisions of the AFM, the general revisions may be inserted in the AFM, provided the relevant information in the general revision is identical to that in Cessna Temporary FAA Approved Airplane Flight Manual Change 68FM TC–R09–13, and this TC may be removed.

Alternative Methods of Compliance (AMOCs)

(i)(1) The Manager, Wichita Aircraft Certification Office (ACO), ACE–115W, FAA, has the authority to approve AMOCs for this AD, if requested using the procedures found in 14 CFR 39.19. In accordance with 14 CFR 39.19, send your request to your principal inspector or local Flight Standards District Office, as appropriate. If sending information directly to the manager of the ACO, send it to the attention of the person identified in the Related Information section of this AD.

(2) Before using any approved AMOC, notify your appropriate principal inspector, or lacking a principal inspector, the manager of the local flight standards district office/ certificate holding district office.

Related Information

(j) For more information about this AD, contact Nhien Hoang, Aerospace Engineer, Electrical Systems and Avionics Branch, ACE–119W, FAA, Wichita Aircraft Certification Office, 1801 Airport Road, Room 100, Mid-Continent Airport, Wichita, Kansas 67209; *phone:* (316) 946–4190; fax: (316) 946–4107; *e-mail: nhien.hoang@faa.gov.*

(k) For service information identified in this AD, contact Cessna Aircraft Co., P.O. Box 7706, Wichita, Kansas 67277; telephone 316–517–6215; fax 316–517–5802; e mail *citationpubs@cessna.textron.com;* Internet *https://www.cessnasupport.com/newlogin.html.* You may review copies of the referenced service information at the FAA, Transport Airplane Directorate, 1601 Lind Avenue, SW., Renton, Washington. For information on the availability of this material at the FAA, call 425–227–1221.

Issued in Renton, Washington, on August 25, 2011.

Ali Bahrami,

Manager, Transport Airplane Directorate, Aircraft Certification Service.

[FR Doc. 2011–22225 Filed 8–30–11; 8:45 am]

BILLING CODE 4910–13–P

DEPARTMENT OF TRANSPORTATION

Federal Aviation Administration

14 CFR Part 39

[Docket No. FAA–2010–0904; Directorate Identifier 2010–NE–33–AD]

RIN 2120–AA64

Airworthiness Directives; Turbomeca Arriel 1B Turboshaft Engines

AGENCY: Federal Aviation Administration (FAA), DOT.

ACTION: Notice of proposed rulemaking (NPRM).

SUMMARY: We propose to adopt a new airworthiness directive (AD) for the products listed above. This proposed AD results from mandatory continuing airworthiness information (MCAI) issued by an aviation authority of another country to identify and correct an unsafe condition on an aviation product. The MCAI describes the unsafe condition as:

During quality inspections in repair centre some 2nd stage Nozzle Guide Vanes (NGVs) to be installed on Pre TU 148 standard Arriel 1B were found not conforming to the definition. The affected parts had been repaired and were found drilled on the rear flange instead of the front flange. This configuration corresponds to 2nd stage Turbine NGVs to be installed on post-TU 148 standard Arriel 1B engines. This non compliance may only be found on post-TU 76 standard 2nd stage Turbine NGVs (i.e., with flexible hub).

This non compliance would increase hot gas ingestion and generate an increase of temperature in the Gas Generator (GG) turbine rotor, potentially resulting in turbine damage and an uncommanded in-flight shutdown.

We are proposing this AD to prevent over-temperature damage of the gas generator turbine, which could result in an uncommanded in-flight engine shutdown, and a subsequent forced autorotation landing or accident.

DATES: We must receive comments on this proposed AD by October 17, 2011.

ADDRESSES: You may send comments by any of the following methods:

- *Federal eRulemaking Portal:* Go to *http://www.regulations.gov* and follow the instructions for sending your comments electronically.
- *Mail:* Docket Management Facility, U.S. Department of Transportation, 1200 New Jersey Avenue, SE., West Building Ground Floor, Room W12–140, Washington, DC 20590–0001.
- *Hand Delivery:* Deliver to Mail address above between 9 a.m. and 5 p.m., Monday through Friday, except Federal holidays.
- *Fax:* 202–493–2251.

Contact Turbomeca, 40220 Tarnos, France; phone: 33 05 59 74 40 00, fax: 33 05 59 74 45 15, for the service information identified in this proposed AD.

Examining the AD Docket

You may examine the AD docket on the Internet at *http://www.regulations.gov;* or in person at the Docket Operations office between 9 a.m. and 5 p.m., Monday through Friday, except Federal holidays. The AD docket contains this proposed AD, the regulatory evaluation, any comments received, and other information. The street address for the Docket Operations office (phone: 800–647–5527) is the same as the Mail address provided in the **ADDRESSES** section. Comments will be available in the AD docket shortly after receipt.

FOR FURTHER INFORMATION CONTACT: Rose Len, Aerospace Engineer, Engine Certification Office, FAA, Engine & Propeller Directorate, 12 New England Executive Park, Burlington, MA 01803; phone: 781–238–7772; fax: 781–238–7199; e-mail: *rose.len@faa.gov.*

SUPPLEMENTARY INFORMATION:

Comments Invited

We invite you to send any written relevant data, views, or arguments about this proposed AD. Send your comments to an address listed under the **ADDRESSES** section. Include ''Docket No. FAA–2010–0904; Directorate Identifier 2010–NE–33–AD'' at the beginning of your comments. We specifically invite comments on the overall regulatory, economic, environmental, and energy aspects of this proposed AD. We will consider all comments received by the closing date and may amend this proposed AD based on those comments.

We will post all comments we receive, without change, to *http://www.regulations.gov,* including any personal information you provide. We will also post a report summarizing each substantive verbal contact with FAA personnel concerning this proposed AD. Using the search function of the Web site, anyone can find and read the comments in any of our dockets, including, if provided, the name of the individual who sent the comment (or

signed the comment on behalf of an association, business, labor union, *etc.*). You may review the DOT's complete Privacy Act Statement in the **Federal Register** published on April 11, 2000 (65 FR 19477–78).

Discussion

The European Aviation Safety Agency (EASA), which is the Technical Agent for the Member States of the European Community, has issued EASA AD 2010–0273R1, dated February 16, 2011 (referred to after this as ''the MCAI''), to correct an unsafe condition for the specified products. The MCAI states:

During quality inspections in repair centre some 2nd stage Nozzle Guide Vanes (NGVs) to be installed on Pre TU 148 standard Arriel 1B were found not conforming to the definition. The affected parts had been repaired and were found drilled on the rear flange instead of the front flange. This configuration corresponds to 2nd stage Turbine NGVs to be installed on post-TU 148 standard Arriel 1B engines. This non compliance may only be found on post-TU 76 standard 2nd stage Turbine NGVs (i.e., with flexible hub).

This non compliance would increase hot gas ingestion and generate an increase of temperature in the Gas Generator (GG) turbine rotor, potentially resulting in turbine damage and an uncommanded in-flight shutdown.

You may obtain further information by examining the MCAI in the AD docket.

Relevant Service Information

Turbomeca has issued Mandatory Service Bulletin (MSB) No. A292 72 0829, Version B, dated December 13, 2010. The actions described in this service information are intended to correct the unsafe condition identified in the MCAI.

FAA's Determination and Requirements of This Proposed AD

This product has been approved by the aviation authority of France and is approved for operation in the United States. Pursuant to our bilateral agreement with France, they have notified us of the unsafe condition described in the MCAI and service information referenced above. We are proposing this AD because we evaluated all information provided by EASA and determined the unsafe condition exists and is likely to exist or develop on other products of the same type design.

This proposed AD would require daily checks for evidence of turbine damage, and removal of the engine from service before further flight if turbine damage is found. This proposed AD would also require inspecting the configuration of the holes in the repaired 2nd stage turbine NGV. If the holes are non-conforming, then before further flight this proposed AD would require replacing the 2nd stage turbine NGV, 1st stage turbine disc, and 2nd stage turbine disc, with discs eligible for installation.

Costs of Compliance

Based on the service information, we estimate that this proposed AD would affect about 20 Turbomeca Arriel 1B turboshaft engines installed on helicopters of U.S. registry. We also estimate that it would take about 40 work-hours per engine to inspect a repaired 2nd stage turbine NGV for the non-conforming hole configuration. We also estimate that it would take about 60 work-hours to replace the NGV, the 1st stage turbine disc, and the 2nd stage turbine disc, and that one engine would require these replacements. The average labor rate is $85 per work-hour. Required parts would cost about $19,889 per engine. Based on these figures, we estimate the cost of the proposed AD on U.S. operators to be $92,989. Our cost estimate is exclusive of possible warranty coverage.

Authority for This Rulemaking

Title 49 of the United States Code specifies the FAA's authority to issue rules on aviation safety. Subtitle I, section 106, describes the authority of the FAA Administrator. ''Subtitle VII: Aviation Programs,'' describes in more detail the scope of the Agency's authority.

We are issuing this rulemaking under the authority described in ''Subtitle VII, Part A, Subpart III, Section 44701: General requirements.'' Under that section, Congress charges the FAA with promoting safe flight of civil aircraft in air commerce by prescribing regulations for practices, methods, and procedures the Administrator finds necessary for safety in air commerce. This regulation is within the scope of that authority because it addresses an unsafe condition that is likely to exist or develop on products identified in this rulemaking action.

Regulatory Findings

We determined that this proposed AD would not have federalism implications under Executive Order 13132. This proposed AD would not have a substantial direct effect on the States, on the relationship between the national Government and the States, or on the distribution of power and responsibilities among the various levels of government.

For the reasons discussed above, I certify this proposed regulation:

1. Is not a ''significant regulatory action'' under Executive Order 12866;

2. Is not a ''significant rule'' under the DOT Regulatory Policies and Procedures (44 FR 11034, February 26, 1979); and

3. Will not have a significant economic impact, positive or negative, on a substantial number of small entities under the criteria of the Regulatory Flexibility Act.

We prepared a regulatory evaluation of the estimated costs to comply with this proposed AD and placed it in the AD docket.

List of Subjects in 14 CFR Part 39

Air transportation, Aircraft, Aviation safety, Safety.

The Proposed Amendment

Accordingly, under the authority delegated to me by the Administrator, the FAA proposes to amend 14 CFR part 39 as follows:

PART 39—AIRWORTHINESS DIRECTIVES

1. The authority citation for part 39 continues to read as follows:

Authority: 49 U.S.C. 106(g), 40113, 44701.

§ 39.13 [Amended]

2. The FAA amends § 39.13 by adding the following new AD:

Turbomeca: Docket No. FAA–2010–0904; Directorate Identifier 2010–NE–33–AD.

Comments Due Date

(a) We must receive comments by October 17, 2011.

Affected Airworthiness Directives (ADs)

(b) None.

Applicability

(c) This AD applies to Turbomeca Arriel 1B turboshaft engines with M03 modules modified by TU 76 or TU 202, and not modified by TU 148, and if fitted with a repaired 2nd stage turbine nozzle guide vane. The M03 module contains the 2nd stage turbine NGV, 1st stage turbine disc, and 2nd stage turbine disc. Guidance on determining if an engine has an unrepaired 2nd stage turbine nozzle guide vane installed can be found in paragraph 1.C. of Turbomeca Mandatory Service Bulletin (MSB) No. A292 72 0829, Version B, dated December 13, 2010.

Reason

(d) During quality inspections in repair centre some 2nd stage Nozzle Guide Vanes (NGVs) to be installed on Pre TU 148 standard Arriel 1B were found not conforming to the definition. The affected parts had been repaired and were found drilled on the rear flange instead of the front flange. This configuration corresponds to 2nd stage Turbine NGVs to be installed on post-TU 148 standard Arriel 1B engines. This non compliance may only be found on post-TU

76 standard 2nd stage Turbine NGVs (i.e., with flexible hub).

This non compliance would increase hot gas ingestion and generate an increase of temperature in the Gas Generator (GG) turbine rotor, potentially resulting in turbine damage and an uncommanded in-flight shutdown. On a single-engine helicopter, this could ultimately lead to an emergency autorotation landing.

We are issuing this AD to prevent over-temperature damage of the gas generator turbine, which could result in an uncommanded in-flight engine shutdown, and a subsequent forced autorotation landing or accident.

Compliance

(e) Comply with this AD within the compliance times specified, unless already done.

Daily Checks

(f) Starting from the effective date of this AD, perform a daily check (after last flight of the day) for:

(1) Normal rundown time of the gas generator rotor; and

(2) The free rotation of the gas generator rotor; and

(3) No grinding noise during the rundown check, and during the free rotation check of the gas generator rotor.

(g) Guidance on performing the daily checks can be found in the Maintenance Manual, task 71–02–09–760–801 and task 05–20–01–200–801.

(h) If the engine fails any of these daily checks, remove the engine from service before further flight.

Inspection of Repaired 2nd Stage Turbine NGVs

(i) Inspect the 2nd stage turbine NGV for a non-conforming hole configuration, at the compliance times in Table 1 of this AD. Guidance on 2nd stage turbine NGV non-conforming hole configuration can be found in Turbomeca MSB No. A292 72 0829, Version B, dated December 13, 2010.

TABLE 1—INSPECTION COMPLIANCE TIMES

If accumulated Gas Generator (GG) Cycles-in-Service (CIS) on the effective date of this AD are:	Then inspect:
(1) Fewer than 1,200 CIS on both the 1st and 2nd stage turbines.	Before exceeding 1,500 GG CIS.
(2) 1,200 or more but fewer than 1,800 CIS on either the 1st or 2nd stage turbines.	Before exceeding 300 GG CIS after the effective date of this AD but not to exceed 2,000 CIS on either the 1st or 2nd stage turbines.
(3) 1,800 or more but fewer than 2,400 CIS on either the 1st or 2nd stage turbine.	Before exceeding 200 GG CIS after the effective date of this AD but not to exceed 2,500 CIS on either the 1st or 2nd stage turbines.
(4) Greater than 2,400 CIS on either the 1st or 2nd stage turbine.	Before exceeding 100 GG CIS after the effective date of this AD but not to exceed 3,000 CIS on either the 1st or 2nd stage turbine.

(j) If the configuration of the holes in the repaired 2nd stage turbine NGV are conforming, then no further action is required.

(k) If the configuration of the holes in the repaired 2nd stage turbine NGV are non-conforming, then before further flight:

(1) Replace the 2nd stage turbine NGV with a 2nd stage turbine NGV eligible for installation; and

(2) Replace the 1st stage turbine disc and 2nd stage turbine disc with discs eligible for installation.

Terminating Action

(l) Complying with paragraph (i) and either paragraph (j) or paragraphs (k)(1) through (k)(2) of this AD, or replacing the M03 module with an M03 module that is eligible for installation, is terminating action for the requirements of this AD.

Installation Prohibition

(m) Do not reinstall the 1st stage turbine disc and the 2nd stage turbine disc removed in paragraph (k)(2) of this AD into any engine.

(n) After the effective date of this AD, do not install an M03 module that has incorporated TU 202 but not incorporated TU 148, unless the module is in compliance with the requirements of this AD.

(o) After the effective date of this AD, do not install an M03 module that has incorporated TU 76 but not incorporated TU 148, unless the module is in compliance with the requirements of this AD.

FAA AD Differences

(p) This AD differs from the Mandatory Continuing Airworthiness Information (MCAI) and/or service information as follows:

(1) This AD does not require sending data to Turbomeca to confirm whether Turbomeca MSB No. A292 72 0829, Version B, dated December 13, 2010, is applicable to the operator's engine; the MCAI does.

(2) This AD does not incorporate by reference (IBR) Turbomeca MSB No. A292 72 0829, Version B, dated December 13, 2010; the MCAI does.

(3) This AD requires replacing non-conforming 2nd stage turbine NGVs and 1st stage and 2nd stage turbine discs that were operated with non-conforming 2nd stage turbine NGVs but does not require replacing affected M03 modules. The MCAI requires replacing affected M03 modules with M03 modules eligible for installation.

Definition

(q) For the purpose of this AD, a conforming repaired 2nd stage turbine NGV is one with cooling holes in the forward inner flange, and with no cooling holes in the rear flange.

Alternative Methods of Compliance (AMOCs)

(r) The Manager, Engine Certification Office, FAA, has the authority to approve AMOCs for this AD, if requested using the procedures found in 14 CFR 39.19.

Related Information

(s) Refer to European Aviation Safety Agency AD 2010–0273R1, dated February 16, 2011, and Turbomeca MSB No. A292 72 0829, Version B, dated December 13, 2010, for related information. Contact Turbomeca, 40220 Tarnos, France; telephone 33 05 59 74 40 00, fax 33 05 59 74 45 15, for a copy of this service information.

(t) Contact Rose Len, Aerospace Engineer, Engine Certification Office, FAA, Engine & Propeller Directorate, 12 New England Executive Park, Burlington, MA 01803; e-mail: *rose.len@faa.gov;* phone: 781–238–7772; fax: 781–238–7199, for more information about this AD.

Issued in Burlington, Massachusetts, on August 23, 2011.

Thomas A. Boudreau,

Acting Manager, Engine and Propeller Directorate, Aircraft Certification Service.

[FR Doc. 2011–22246 Filed 8–30–11; 8:45 am]

BILLING CODE 4910–13–P

DEPARTMENT OF TRANSPORTATION

Federal Aviation Administration

14 CFR Part 39

[Docket No. FAA–2011–0912; Directorate Identifier 2011–NM–035–AD]

RIN 2120–AA64

Airworthiness Directives; 328 Support Services GmbH (Type Certificate Previously Held by AvCraft Aerospace GmbH; Fairchild Dornier GmbH; Dornier Luftfahrt GmbH) Model 328–100 Airplanes

AGENCY: Federal Aviation Administration (FAA), DOT.

ACTION: Notice of proposed rulemaking (NPRM).

SUMMARY: We propose to adopt a new airworthiness directive (AD) for the products listed above. This proposed AD results from mandatory continuing airworthiness information (MCAI) originated by an aviation authority of another country to identify and correct an unsafe condition on an aviation product. The MCAI describes the unsafe condition as:

Several runway excursion incidents and a single accident have occurred in the past with Dornier 328–100 aeroplanes, where the power lever could not be operated as intended during the landing roll-out. * * *

Recurrence of such an event under similar conditions, if not corrected, could result in further cases of runway excursion, possibly resulting in damage to the aeroplane and injury to the occupants.

* * * * *

The proposed AD would require actions that are intended to address the unsafe condition described in the MCAI.

DATES: We must receive comments on this proposed AD by October 17, 2011.

ADDRESSES: You may send comments by any of the following methods:

- *Federal eRulemaking Portal:* Go to *http://www.regulations.gov.* Follow the instructions for submitting comments.
- *Fax:* (202) 493–2251.
- *Mail:* U.S. Department of Transportation, Docket Operations, M–30, West Building Ground Floor, Room W12–140, 1200 New Jersey Avenue, SE., Washington, DC 20590.
- *Hand Delivery:* U.S. Department of Transportation, Docket Operations, M–30, West Building Ground Floor, Room W12–40, 1200 New Jersey Avenue, SE., Washington, DC, between 9 a.m. and 5 p.m., Monday through Friday, except Federal holidays.

For service information identified in this proposed AD, contact 328 Support Services GmbH, Global Support Center, P.O. Box 1252, D–82231 Wessling, Federal Republic of Germany; telephone +49 8153 88111 6666; fax +49 8153 88111 6565; e-mail *gsc.op@328support.de;* Internet *http://www.328support.de.* You may review copies of the referenced service information at the FAA, Transport Airplane Directorate, 1601 Lind Avenue, SW., Renton, Washington. For information on the availability of this material at the FAA, call 425–227–1221.

Examining the AD Docket

You may examine the AD docket on the Internet at *http://www.regulations.gov;* or in person at the Docket Operations office between 9 a.m. and 5 p.m., Monday through Friday, except Federal holidays. The AD docket contains this proposed AD, the regulatory evaluation, any comments received, and other information. The street address for the Docket Operations office (telephone (800) 647–5527) is in the **ADDRESSES** section. Comments will be available in the AD docket shortly after receipt.

FOR FURTHER INFORMATION CONTACT: Tom Groves, Aerospace Engineer, International Branch, ANM–116, Transport Airplane Directorate, FAA, 1601 Lind Avenue, SW., Renton, Washington 98057–3356; telephone (425) 227–1503; fax (425) 227–1149.

SUPPLEMENTARY INFORMATION:

Comments Invited

We invite you to send any written relevant data, views, or arguments about this proposed AD. Send your comments to an address listed under the **ADDRESSES** section. Include ''Docket No. FAA–2011–0912; Directorate Identifier 2011–NM–035–AD'' at the beginning of your comments. We specifically invite comments on the overall regulatory, economic, environmental, and energy aspects of this proposed AD. We will consider all comments received by the closing date and may amend this proposed AD based on those comments.

We will post all comments we receive, without change, to *http://www.regulations.gov,* including any personal information you provide. We will also post a report summarizing each substantive verbal contact we receive about this proposed AD.

Discussion

The European Aviation Safety Agency (EASA), which is the Technical Agent for the Member States of the European Community, has issued EASA Airworthiness Directive 2009–0196, dated September 4, 2009 (referred to after this as ''the MCAI''), to correct an unsafe condition for the specified products. The MCAI states:

Several runway excursion incidents and a single accident have occurred in the past with Dornier 328–100 aeroplanes, where the power lever could not be operated as intended during the landing roll-out. * * *

Recurrence of such an event under similar conditions, if not corrected, could result in further cases of runway excursion, possibly resulting in damage to the aeroplane and injury to the occupants.

A modification to the power lever control box has been designed to prevent further power lever handling difficulties.

For the reasons described above, this [EASA] AD requires a modification of the power lever control box as a retrofit for the entire fleet of 328–100 aeroplanes.

The required actions also include revising the airplane flight manual (AFM) to include Dornier 328–100 Temporary Revisions (TR) 04–078, 04–079, and 04–080, all dated March 15, 2010, to the Abnormal Procedures section of the 328 Support Services 328–100 AFM; and Dornier 328–100 TRs 05–064, 05–065, and 05–066, all dated February 13, 2009, to the Normal Procedures section of the 328 Support Services 328–100 AFM; to introduce modification of the engine control box assembly. You may obtain further information by examining the MCAI in the AD docket.

Relevant Service Information

328 Support Services GmbH has issued Service Bulletin SB–328–76–486, Revision 3, dated April 7, 2010; and Dornier 328–100 TRs 04–078, 04–079, and 04–080, all dated March 15, 2010, to the Abnormal Procedures section of the 328 Support Services 328–100 AFM; and Dornier 328–100 TRs 05–064, 05–065, and 05–066, all dated February 13, 2009, to the Normal Procedures section of the 328 Support Services 328–100 AFM. The actions described in this service information are intended to correct the unsafe condition identified in the MCAI.

FAA's Determination and Requirements of This Proposed AD

This product has been approved by the aviation authority of another country, and is approved for operation in the United States. Pursuant to our bilateral agreement with the State of Design Authority, we have been notified of the unsafe condition described in the MCAI and service information referenced above. We are proposing this AD because we evaluated all pertinent information and determined an unsafe condition exists and is likely to exist or develop on other products of the same type design.

Differences Between This AD and the MCAI or Service Information

We have reviewed the MCAI and related service information and, in general, agree with their substance. But we might have found it necessary to use different words from those in the MCAI to ensure the AD is clear for U.S. operators and is enforceable. In making these changes, we do not intend to differ substantively from the information provided in the MCAI and related service information.

We might also have proposed different actions in this AD from those in the MCAI in order to follow FAA policies. Any such differences are highlighted in a NOTE within the proposed AD.

Costs of Compliance

Based on the service information, we estimate that this proposed AD would affect about 20 products of U.S. registry. We also estimate that it would take about 79 work-hours per product to comply with the basic requirements of this proposed AD. The average labor rate is $85 per work-hour. Required parts would cost about $35,700 per product. Where the service information lists required parts costs that are covered under warranty, we have assumed that there will be no charge for these parts. As we do not control warranty coverage for affected parties, some parties may incur costs higher than estimated here. Based on these figures, we estimate the cost of the proposed AD on U.S. operators to be $848,300, or $42,415 per product.

Authority for This Rulemaking

Title 49 of the United States Code specifies the FAA's authority to issue rules on aviation safety. Subtitle I, section 106, describes the authority of the FAA Administrator. ''Subtitle VII: Aviation Programs,'' describes in more detail the scope of the Agency's authority.

We are issuing this rulemaking under the authority described in ''Subtitle VII, Part A, Subpart III, Section 44701: General requirements.'' Under that section, Congress charges the FAA with promoting safe flight of civil aircraft in air commerce by prescribing regulations for practices, methods, and procedures the Administrator finds necessary for safety in air commerce. This regulation is within the scope of that authority because it addresses an unsafe condition that is likely to exist or develop on products identified in this rulemaking action.

Regulatory Findings

We determined that this proposed AD would not have federalism implications under Executive Order 13132. This proposed AD would not have a substantial direct effect on the States, on the relationship between the national Government and the States, or on the distribution of power and responsibilities among the various levels of government.

For the reasons discussed above, I certify this proposed regulation:

1. Is not a ''significant regulatory action'' under Executive Order 12866;

2. Is not a ''significant rule'' under the DOT Regulatory Policies and Procedures (44 FR 11034, February 26, 1979); and

3. Will not have a significant economic impact, positive or negative, on a substantial number of small entities under the criteria of the Regulatory Flexibility Act.

We prepared a regulatory evaluation of the estimated costs to comply with this proposed AD and placed it in the AD docket.

List of Subjects in 14 CFR Part 39

Air transportation, Aircraft, Aviation safety, Incorporation by reference, Safety.

The Proposed Amendment

Accordingly, under the authority delegated to me by the Administrator, the FAA proposes to amend 14 CFR part 39 as follows:

PART 39—AIRWORTHINESS DIRECTIVES

1. The authority citation for part 39 continues to read as follows:

Authority: 49 U.S.C. 106(g), 40113, 44701.

§ 39.13 [Amended]

2. The FAA amends § 39.13 by adding the following new AD:

328 Support Services GmbH (Type Certificate Previously Held by AvCraft Aerospace GmbH; Fairchild Dornier GmbH; Dornier Luftfahrt GmbH): Docket No. FAA–2011–0912; Directorate Identifier 2011–NM–035–AD.

Comments Due Date

(a) We must receive comments by October 17, 2011.

Affected ADs

(b) None.

Applicability

(c) This AD applies to 328 Support Services GmbH (Type Certificate previously held by AvCraft Aerospace GmbH; Fairchild Dornier GmbH; Dornier Luftfahrt GmbH) Model 328–100 airplanes; all serial numbers; certificated in any category.

Subject

(d) Air Transport Association (ATA) of America Code 76: Engine Controls.

Reason

(e) The mandatory continuing airworthiness information (MCAI) states:

Several runway excursion incidents and a single accident have occurred in the past with Dornier 328–100 aeroplanes, where the power lever could not be operated as intended during the landing roll-out. * * *

Recurrence of such an event under similar conditions, if not corrected, could result in further cases of runway excursion, possibly resulting in damage to the aeroplane and injury to the occupants.

* * * * *

Compliance

(f) You are responsible for having the actions required by this AD performed within the compliance times specified, unless the actions have already been done.

Modification

(g) Within 15 months after the effective date of this AD, modify the engine control box assembly with additional aural alerting function and a revised power lever guiding gate, in accordance with the Accomplishment Instructions of 328 Support Services Service Bulletin SB–328–76–486, Revision 3, dated April 7, 2010.

Credit for Actions Accomplished in Accordance With Previous Service Information

(h) Modifications done before the effective date of this AD in accordance with 328 Support Services Service Bulletin SB–328–76–486, dated July 15, 2009; Revision 1, dated March 2, 2010; or Revision 2, dated March 11, 2010; are acceptable for compliance with the corresponding requirements of paragraph (g) of this AD.

Airplane Flight Manual Revisions

(i) Concurrently with doing the modification required in paragraph (g) of this AD, revise the 328 Support Services 328–100 Airplane Flight Manual (AFM) to include the information in the Dornier 328–100 temporary revisions (TRs) identified in table 1 of this AD. Operate the airplane according to the procedures in the TRs.

TABLE 1—TEMPORARY REVISIONS

Subject—	Dornier 328–100 TR—	AFM Section—	Dated—
Power lever aural alert test	05–064, 05–065, and 05–066	Normal Procedures	February 13, 2009.
Nuisance power lever aural alert	04–078	Abnormal Procedures	March 15, 2010.
Engine Indication and Crew Alerting System (EICAS) caution ''Proxi System''.	04–079 and 04–080	Abnormal Procedures	March 15, 2010.

Note 1: Revising the AFM may be done by inserting copies of the TRs specified in table 1 of this AD, in the 328 Support Services 328–100 AFM. When these TRs have been included in general revisions of this AFM, the general revisions may be inserted in the AFM, provided the relevant information in the general revision of this AFM are identical

to that in the TRs specified in table 1 of this AD, and these TRs may be removed.

FAA AD Differences

Note 2: This AD differs from the MCAI and/or service information as follows:

(1) Although the MCAI tells you to do an inspection for discrepancies, 328 Support Services Service Bulletin SB–328–76–486, Revision 3, dated April 7, 2010, does not include this action. The off-wing inspection included in the MCAI is not required to address the unsafe condition. The modification addresses the identified unsafe condition. Therefore, this AD does not include that requirement.

(2) Although the MCAI and service information do not include revising the AFM, this AD includes that requirement. The TRs specified in table 1 of this AD introduce pre-flight operational tests of the warning system modification, along with abnormal procedures that provide guidance to the flightcrew in the event of various potential warning system faults. These procedures must be adopted at the same time the modification is installed to ensure proper use and operation of the power lever warning system. This has been coordinated with EASA.

Other FAA AD Provisions

(j) The following provisions also apply to this AD:

(1) *Alternative Methods of Compliance (AMOCs):* The Manager, International Branch, ANM–116, Transport Airplane Directorate, FAA, has the authority to approve AMOCs for this AD, if requested using the procedures found in 14 CFR 39.19. In accordance with 14 CFR 39.19, send your request to your principal inspector or local Flight Standards District Office, as appropriate. If sending information directly to the International Branch, send it to ATTN: Tom Groves, Aerospace Engineer, International Branch, ANM–116, Transport Airplane Directorate, FAA, 1601 Lind Avenue, SW., Renton, Washington 98057–3356; telephone (425) 227–1503; fax (425) 227–1149. Information may be e-mailed to: *9-ANM-116-AMOC-REQUESTS@faa.gov.* Before using any approved AMOC, notify your appropriate principal inspector, or lacking a principal inspector, the manager of the local flight standards district office/certificate holding district office. The AMOC approval letter must specifically reference this AD.

(2) *Airworthy Product:* For any requirement in this AD to obtain corrective actions from a manufacturer or other source, use these actions if they are FAA-approved. Corrective actions are considered FAA-approved if they are approved by the State of Design Authority (or their delegated agent). You are required to assure the product is airworthy before it is returned to service.

Related Information

(k) Refer to MCAI EASA Airworthiness Directive 2009–0196, dated September 4, 2009; 328 Support Services Service Bulletin SB–328–76–486, Revision 3, dated April 7, 2010; and the TRs specified in Table 1 of this AD; for related information.

Issued in Renton, Washington, on August 23, 2011.

Ali Bahrami,

Manager, Transport Airplane Directorate, Aircraft Certification Service.

[FR Doc. 2011–22226 Filed 8–30–11; 8:45 am]

BILLING CODE 4910–13–P

DEPARTMENT OF TRANSPORTATION

Federal Aviation Administration

14 CFR Part 71

[Docket No. FAA–2011–0880 Airspace Docket No. 11–AAL–17]

Proposed Amendment of Class E Airspace; Emmonak, AK

AGENCY: Federal Aviation Administration (FAA), DOT.

ACTION: Notice of proposed rulemaking (NPRM).

SUMMARY: This action proposes to revise Class E airspace at Emmonak, AK. The amendment of two standard instrument approach procedures at the Emmonak Airport has made this action necessary to enhance safety and management of Instrument Flight Rules (IFR) operations.

DATES: Comments must be received on or before October 17, 2011.

ADDRESSES: Send comments on the proposal to the Docket Management Facility, U.S. Department of Transportation, 1200 New Jersey Avenue, SE., West Building Ground Floor, Room W12–140, Washington, DC 20590–0001. You must identify the docket number FAA–2011–0880/Airspace Docket No. 11–AAL–17 at the beginning of your comments. You may also submit comments on the Internet at *http://www.regulations.gov.* You may review the public docket containing the proposal, any comments received, and any final disposition in person in the Dockets Office between 9 a.m. and 5 p.m., Monday through Friday, except Federal holidays. The Docket Office (telephone 1–800–647–5527) is on the plaza level of the Department of Transportation NASSIF Building at the above address.

An informal docket may also be examined during normal business hours at the office of the Manager, Safety, Alaska Flight Service Operations, Federal Aviation Administration, 222 West 7th Avenue, Box 14, Anchorage, AK 99513–7587.

FOR FURTHER INFORMATION CONTACT: Martha Dunn, Federal Aviation Administration, 222 West 7th Avenue, Box 14, Anchorage, AK 99513–7587; telephone number (907) 271–5898; *fax:* (907) 271–2850; *e-mail: Martha.ctr.Dunn@faa.gov. Internet address: http://www.faa.gov/about/office_org/headquarters_offices/ato/service_units/systemops/fs/alaskan/rulemaking/.*

SUPPLEMENTARY INFORMATION:

Comments Invited

Interested parties are invited to participate in this proposed rulemaking by submitting such written data, views, or arguments as they may desire. Comments that provide the factual basis supporting the views and suggestions presented are particularly helpful in developing reasoned regulatory decisions on the proposal. Comments are specifically invited on the overall regulatory, aeronautical, economic, environmental, and energy-related aspects of the proposal. Communications should identify both docket numbers and be submitted in triplicate to the address listed above. Commenters wishing the FAA to acknowledge receipt of their comments on this notice must submit with those comments a self-addressed, stamped postcard on which the following statement is made: ''Comments to Docket No. FAA–2011–0880/Airspace Docket No. 11–AAL–17.'' The postcard will be date/time stamped and returned to the commenter.

All communications received on or before the specified closing date for comments will be considered before taking action on the proposed rule. The proposal contained in this notice may be changed in light of comments received. All comments submitted will be available for examination in the public docket both before and after the closing date for comments. A report summarizing each substantive public contact with FAA personnel concerned with this rulemaking will be filed in the docket.

Availability of NPRMs

An electronic copy of this document may be downloaded through the Internet at *http://www.regulations.gov.* Recently published rulemaking documents can also be accessed through the FAA's web page at *http://www.faa.gov/airports_airtraffic/air_traffic/publications/airspace_amendments/.*

Additionally, any person may obtain a copy of this notice by submitting a request to the Federal Aviation Administration, Office of Air Traffic Airspace Management, ATA–400, 800 Independence Avenue, SW., Washington, DC 20591 or by calling (202) 267–8783. Communications must

identify both docket numbers for this notice. Persons interested in being placed on a mailing list for future NPRMs should contact the FAA's Office of Rulemaking, (202) 267–9677, to request a copy of Advisory Circular No. 11–2A, Notice of Proposed Rulemaking Distribution System, which describes the application procedure.

The Proposal

This action proposes to amend Title 14 Code of Federal Regulations (14 CFR) part 71 by revising Class E5 airspace at the Emmonak Airport in Emmonak, AK, to accommodate the revision of two standard instrument approach procedures at the Emmonak Airport. This Class E airspace would provide adequate controlled airspace upward from the 700 feet and 1,200 feet above the surface, for the safety and management of IFR operations at the Emmonak Airport. A portion of the airspace lies further than 12 miles offshore and overlaps Norton Sound Low. That offshore airspace area will be amended in a future rule-making action.

Class E5 airspace designated as 700 and 1200 foot transition areas are published in paragraph 6005 in FAA Order 7400.9U, Airspace Designations and Reporting Points, signed August 18, 2010, and effective September 15, 2010, which is incorporated by reference in 14 CFR 71.1. The airspaces listed in this document would be subsequently published in that Order.

The FAA has determined that this proposed regulation only involves an established body of technical regulations for which frequent and routine amendments are necessary to keep them operationally current. It, therefore—(1) Is not a ''significant regulatory action'' under Executive Order 12866; (2) is not a ''significant rule'' under DOT Regulatory Policies and Procedures (44 FR 11034; February 26, 1979); and (3) does not warrant preparation of a regulatory evaluation as the anticipated impact is so minimal. Because this is a routine matter that will only affect air traffic procedures and air navigation, it is certified that this rule, when promulgated, will not have a significant economic impact on a substantial number of small entities under the criteria of the Regulatory Flexibility Act.

The FAA's authority to issue rules regarding aviation safety is found in Title 49 of the United States Code. subtitle 1, Section 106 describes the authority of the FAA Administrator. subtitle VII, Aviation Programs, describes in more detail the scope of the agency's authority.

This rulemaking is promulgated under the authority described in subtitle VII, part A, subpart 1, Section 40103, Sovereignty and use of airspace. Under that section, the FAA is charged with prescribing regulations to ensure the safe and efficient use of the navigable airspace. This regulation is within the scope of that authority because it proposes to revise Class E airspace at the Emmonak Airport, Emmonak, AK, and represents the FAA's continuing effort to safely and efficiently use the navigable airspace.

List of Subjects in 14 CFR Part 71

Airspace, Incorporation by reference, Navigation (air).

The Proposed Amendment

In consideration of the foregoing, the Federal Aviation Administration proposes to amend 14 CFR part 71 as follows:

PART 71—DESIGNATION OF CLASS A, B, C, D, AND E AIRSPACE AREAS; AIR TRAFFIC SERVICE ROUTES; AND REPORTING POINTS

1. The authority citation for 14 CFR part 71 continues to read as follows:

Authority: 49 U.S.C. 106(g), 40103, 40113, 40120; E.O. 10854, 24 FR 9565, 3 CFR, 1959–1963 Comp., p. 389.

§ 71.1 [Amended]

2. The incorporation by reference in 14 CFR 71.1 of Federal Aviation Administration Order 7400.9U, *Airspace Designations and Reporting Points,* signed August 18, 2010, and effective September 15, 2010, is to be amended as follows:

* * * * *

Paragraph 6005 Class E airspace extending upward from 700 feet or more above the surface of the earth.

AAL AK E5 Emmonak, AK [Revised]

Emmonak Airport, AK
(Lat. 62°47′10″ N., long. 164°29′27″ W.)
Emmonak VOR/DME
(Lat. 62°47′05″ N., long. 164°29′15″ W.)

That airspace extending upward from 700 feet above the surface within a 6.5-mile radius of the Emmonak Airport, AK and within 4 miles east and 8 miles west of the Emmonak VOR/DME 353° radial extending from the VOR/DME to 16 miles north and within 4 miles east and 8 miles west of the Emmonak VOR/DME 182° radial extending from the VOR/DME to 16 miles south and that airspace extending upward from 1,200 feet above the surface within a 73-mile radius of the Emmonak Airport, AK, excluding that area outside 12 miles from the shoreline that overlies Norton Sound Low.

Issued in Anchorage, AK, on August 19, 2011.

Marshall G. Severson,

Acting Manager, Alaska Flight Services .

[FR Doc. 2011–22227 Filed 8–30–11; 8:45 am]

BILLING CODE 4910–13–P

DEPARTMENT OF TRANSPORTATION

Federal Aviation Administration

14 CFR Part 71

[Docket No. FAA–2011–0866 Airspace Docket No. 11–AAL–15]

Proposed Amendment of Class E Airspace; Kipnuk, AK

AGENCY: Federal Aviation Administration (FAA), DOT.

ACTION: Notice of proposed rulemaking (NPRM).

SUMMARY: This action proposes to revise Class E airspace at Kipnuk, AK. The amendment of two standard instrument approach procedures at the Kipnuk Airport has made this action necessary to enhance safety and management of Instrument Flight Rules (IFR) operations.

DATES: Comments must be received on or before October 17, 2011.

ADDRESSES: Send comments on the proposal to the Docket Management Facility, U.S. Department of Transportation, 1200 New Jersey Avenue, SE., West Building Ground Floor, Room W12–140, Washington, DC 20590–0001. You must identify the docket number FAA–2011–0866/ Airspace Docket No. 11–AAL–15 at the beginning of your comments. You may also submit comments on the Internet at *http://www.regulations.gov.* You may review the public docket containing the proposal, any comments received, and any final disposition in person in the Dockets Office between 9 a.m. and 5 p.m., Monday through Friday, except Federal holidays. The Docket Office (telephone 1–800–647–5527) is on the plaza level of the Department of Transportation NASSIF Building at the above address.

An informal docket may also be examined during normal business hours at the office of the Manager, Safety, Alaska Flight Service Operations, Federal Aviation Administration, 222 West 7th Avenue, Box 14, Anchorage, AK 99513–7587.

FOR FURTHER INFORMATION CONTACT: Martha Dunn, Federal Aviation Administration, 222 West 7th Avenue, Box 14, Anchorage, AK 99513–7587; telephone number (907) 271–5898; fax:

(907) 271–2850; *e-mail: Martha.ctr.Dunn@faa.gov. Internet address: http://www.faa.gov/about/office_org/headquarters_offices/ato/service_units/systemops/fs/alaskan/rulemaking/.*

SUPPLEMENTARY INFORMATION:

Comments Invited

Interested parties are invited to participate in this proposed rulemaking by submitting such written data, views, or arguments as they may desire. Comments that provide the factual basis supporting the views and suggestions presented are particularly helpful in developing reasoned regulatory decisions on the proposal. Comments are specifically invited on the overall regulatory, aeronautical, economic, environmental, and energy-related aspects of the proposal. Communications should identify both docket numbers and be submitted in triplicate to the address listed above. Commenters wishing the FAA to acknowledge receipt of their comments on this notice must submit with those comments a self-addressed, stamped postcard on which the following statement is made: ''Comments to Docket No. FAA–2011–00866/Airspace Docket No. 11–AAL–15.'' The postcard will be date/time stamped and returned to the commenter.

All communications received on or before the specified closing date for comments will be considered before taking action on the proposed rule. The proposal contained in this notice may be changed in light of comments received. All comments submitted will be available for examination in the public docket both before and after the closing date for comments. A report summarizing each substantive public contact with FAA personnel concerned with this rulemaking will be filed in the docket.

Availability of NPRMs

An electronic copy of this document may be downloaded through the Internet at *http://www.regulations.gov.* Recently published rulemaking documents can also be accessed through the FAA's web page at *http://www.faa.gov/airports_airtraffic/air_traffic/publications/airspace_amendments/.*

Additionally, any person may obtain a copy of this notice by submitting a request to the Federal Aviation Administration, Office of Air Traffic Airspace Management, ATA–400, 800 Independence Avenue, SW., Washington, DC 20591 or by calling (202) 267–8783. Communications must identify both docket numbers for this notice. Persons interested in being placed on a mailing list for future NPRMs should contact the FAA's Office of Rulemaking, (202) 267–9677, to request a copy of Advisory Circular No. 11–2A, Notice of Proposed Rulemaking Distribution System, which describes the application procedure.

The Proposal

This action proposes to amend Title 14 Code of Federal Regulations (14 CFR) part 71 by revising Class E5 airspace at the Kipnuk Airport in Kipnuk, AK, to accommodate the revision of two standard instrument approach procedures at the Kipnuk Airport. This Class E airspace would provide adequate controlled airspace upward from the 700 feet and 1,200 feet above the surface, for the safety and management of IFR operations at the Kipnuk Airport. A portion of the airspace lies further than 12 miles offshore and overlaps Norton Sound Low and Control 1234L offshore airspace areas. Those offshore airspace areas will be amended in a future rulemaking action.

Class E5 airspace designated as 700 and 1200 foot transition areas are published in paragraph 6005 in FAA Order 7400.9U, Airspace Designations and Reporting Points, signed August 18, 2010, and effective September 15, 2010, which is incorporated by reference in 14 CFR 71.1. The airspaces listed in this document would be subsequently published in that Order.

The FAA has determined that this proposed regulation only involves an established body of technical regulations for which frequent and routine amendments are necessary to keep them operationally current. It, therefore—(1) Is not a ''significant regulatory action'' under Executive Order 12866; (2) is not a ''significant rule'' under DOT Regulatory Policies and Procedures (44 FR 11034; February 26, 1979); and (3) does not warrant preparation of a regulatory evaluation as the anticipated impact is so minimal. Because this is a routine matter that will only affect air traffic procedures and air navigation, it is certified that this rule, when promulgated, will not have a significant economic impact on a substantial number of small entities under the criteria of the Regulatory Flexibility Act.

The FAA's authority to issue rules regarding aviation safety is found in Title 49 of the United States Code. Subtitle 1, Section 106 describes the authority of the FAA Administrator. Subtitle VII, Aviation Programs, describes in more detail the scope of the agency's authority.

This rulemaking is promulgated under the authority described in subtitle VII, part A, subpart 1, Section 40103, Sovereignty and use of airspace. Under that section, the FAA is charged with prescribing regulations to ensure the safe and efficient use of the navigable airspace. This regulation is within the scope of that authority because it proposes to revise Class E airspace at the Kipnuk Airport, Kipnuk, AK, and represents the FAA's continuing effort to safely and efficiently use the navigable airspace.

List of Subjects in 14 CFR Part 71

Airspace, Incorporation by reference, Navigation (air).

The Proposed Amendment

In consideration of the foregoing, the Federal Aviation Administration proposes to amend 14 CFR part 71 as follows:

PART 71—DESIGNATION OF CLASS A, B, C, D, AND E AIRSPACE AREAS; AIR TRAFFIC SERVICE ROUTES; AND REPORTING POINTS

1. The authority citation for 14 CFR part 71 continues to read as follows:

Authority: 49 U.S.C. 106(g), 40103, 40113, 40120; E.O. 10854, 24 FR 9565, 3 CFR, 1959–1963 Comp., p. 389.

§ 71.1 [Amended]

2. The incorporation by reference in 14 CFR 71.1 of Federal Aviation Administration Order 7400.9U, *Airspace Designations and Reporting Points,* signed August 18, 2010, and effective September 15, 2010, is to be amended as follows:

* * * * *

Paragraph 6005 Class E airspace extending upward from 700 feet or more above the surface of the earth.

AAL AK E5 Kipnuk, AK [Revised]

Kipnuk Airport, AK

(Lat. 59°55′59″ N., long. 164°01′50″ W)

That airspace extending upward from 700 feet above the surface within a 6.9-mile radius of the Kipnuk Airport, AK and that airspace extending upward from 1,200 feet above the surface within a 73-mile radius of the Kipnuk Airport, AK, excluding that area outside 12 miles from the shoreline within Norton Sound Low and Control 1234L.

Issued in Anchorage, AK, on August 19, 2011.

Marshall G. Severson,

Acting Manager, Alaska Flight Services.

[FR Doc. 2011–22230 Filed 8–30–11; 8:45 am]

BILLING CODE 4910–13–P

DEPARTMENT OF TRANSPORTATION

Federal Aviation Administration

14 CFR Part 71

[Docket No. FAA–2011–0881 Airspace Docket No. 11–AAL–18]

Proposed Amendment of Class E Airspace; Kwigillingok, AK

AGENCY: Federal Aviation Administration (FAA), DOT.

ACTION: Notice of proposed rulemaking (NPRM).

SUMMARY: This action proposes to revise Class E airspace at Kwigillingok, AK. The amendment of two standard instrument approach procedures at the Kwigillingok Airport has made this action necessary to enhance safety and management of Instrument Flight Rules (IFR) operations.

DATES: Comments must be received on or before October 17, 2011.

ADDRESSES: Send comments on the proposal to the Docket Management Facility, U.S. Department of Transportation, 1200 New Jersey Avenue, SE., West Building Ground Floor, Room W12–140, Washington, DC 20590–0001. You must identify the docket number FAA–2011–0881/ Airspace Docket No. 11–AAL–18 at the beginning of your comments. You may also submit comments on the Internet at *http://www.regulations.gov.* You may review the public docket containing the proposal, any comments received, and any final disposition in person in the Dockets Office between 9 a.m. and 5 p.m., Monday through Friday, except Federal holidays. The Docket Office (telephone 1–800–647–5527) is on the plaza level of the Department of Transportation NASSIF Building at the above address.

An informal docket may also be examined during normal business hours at the office of the Manager, Safety, Alaska Flight Service Operations, Federal Aviation Administration, 222 West 7th Avenue, Box 14, Anchorage, AK 99513–7587.

FOR FURTHER INFORMATION CONTACT: Martha Dunn, Federal Aviation Administration, 222 West 7th Avenue, Box 14, Anchorage, AK 99513–7587; telephone number (907) 271–5898; fax: (907) 271–2850; *e-mail: Martha.ctr.Dunn@faa.gov. Internet address: http://www.faa.gov/about/ office_org/headquarters_offices/ato/ service_units/systemops/fs/alaskan/ rulemaking/.*

SUPPLEMENTARY INFORMATION:

Comments Invited

Interested parties are invited to participate in this proposed rulemaking by submitting such written data, views, or arguments as they may desire. Comments that provide the factual basis supporting the views and suggestions presented are particularly helpful in developing reasoned regulatory decisions on the proposal. Comments are specifically invited on the overall regulatory, aeronautical, economic, environmental, and energy-related aspects of the proposal. Communications should identify both docket numbers and be submitted in triplicate to the address listed above. Commenters wishing the FAA to acknowledge receipt of their comments on this notice must submit with those comments a self-addressed, stamped postcard on which the following statement is made: ''Comments to Docket No. FAA–2011–0881/Airspace Docket No. 11–AAL–18.'' The postcard will be date/time stamped and returned to the commenter.

All communications received on or before the specified closing date for comments will be considered before taking action on the proposed rule. The proposal contained in this notice may be changed in light of comments received. All comments submitted will be available for examination in the public docket both before and after the closing date for comments. A report summarizing each substantive public contact with FAA personnel concerned with this rulemaking will be filed in the docket.

Availability of NPRMs

An electronic copy of this document may be downloaded through the Internet at *http://www.regulations.gov.* Recently published rulemaking documents can also be accessed through the FAA's web page at *http:// www.faa.gov/airports_airtraffic/ air_traffic/publications/ airspace_amendments/.*

Additionally, any person may obtain a copy of this notice by submitting a request to the Federal Aviation Administration, Office of Air Traffic Airspace Management, ATA–400, 800 Independence Avenue, SW., Washington, DC 20591 or by calling (202) 267–8783. Communications must identify both docket numbers for this notice. Persons interested in being placed on a mailing list for future NPRM's should contact the FAA's Office of Rulemaking, (202) 267–9677, to request a copy of Advisory Circular No. 11–2A, Notice of Proposed Rulemaking Distribution System, which describes the application procedure.

The Proposal

This action proposes to amend Title 14 Code of Federal Regulations (14 CFR) part 71 by revising Class E5 airspace at the Kwigillingok Airport in Kwigillingok, AK, to accommodate the revision of two standard instrument approach procedures at the Kwigillingok Airport. This Class E airspace would provide adequate controlled airspace upward from the 700 feet and 1,200 feet above the surface, for the safety and management of IFR operations at the Kwigillingok Airport. A portion of the airspace lies further than 12 miles offshore and overlaps Norton Sound Low offshore airspace area. Norton Sound Low offshore airspace area will be amended in a future rule-making action.

Class E5 airspace designated as 700 and 1200 foot transition areas are published in paragraph 6005 in FAA Order 7400.9U, Airspace Designations and Reporting Points, signed August 18, 2010, and effective September 15, 2010, which is incorporated by reference in 14 CFR 71.1. The airspaces listed in this document would be subsequently published in that Order.

The FAA has determined that this proposed regulation only involves an established body of technical regulations for which frequent and routine amendments are necessary to keep them operationally current. It, therefore—(1) Is not a ''significant regulatory action'' under Executive Order 12866; (2) is not a ''significant rule'' under DOT Regulatory Policies and Procedures (44 FR 11034; February 26, 1979); and (3) does not warrant preparation of a regulatory evaluation as the anticipated impact is so minimal. Because this is a routine matter that will only affect air traffic procedures and air navigation, it is certified that this rule, when promulgated, will not have a significant economic impact on a substantial number of small entities under the criteria of the Regulatory Flexibility Act.

The FAA's authority to issue rules regarding aviation safety is found in Title 49 of the United States Code. subtitle 1, section 106 describes the authority of the FAA Administrator. Subtitle VII, Aviation Programs, describes in more detail the scope of the agency's authority.

This rulemaking is promulgated under the authority described in subtitle VII, part A, subpart 1, Section 40103, Sovereignty and use of airspace. Under that section, the FAA is charged with prescribing regulations to ensure the

safe and efficient use of the navigable airspace. This regulation is within the scope of that authority because it proposes to revise Class E airspace at the Kwigillingok Airport, Kwigillingok, AK, and represents the FAA's continuing effort to safely and efficiently use the navigable airspace.

List of Subjects in 14 CFR Part 71

Airspace, Incorporation by reference, Navigation (air).

The Proposed Amendment

In consideration of the foregoing, the Federal Aviation Administration proposes to amend 14 CFR part 71 as follows:

PART 71—DESIGNATION OF CLASS A, B, C, D, AND E AIRSPACE AREAS; AIR TRAFFIC SERVICE ROUTES; AND REPORTING POINTS

1. The authority citation for 14 CFR part 71 continues to read as follows:

Authority: 49 U.S.C. 106(g), 40103, 40113, 40120; E.O. 10854, 24 FR 9565, 3 CFR, 1959–1963 Comp., p. 389.

§ 71.1 [Amended]

2. The incorporation by reference in 14 CFR 71.1 of Federal Aviation Administration Order 7400.9U, *Airspace Designations and Reporting Points,* signed August 18, 2010, and effective September 15, 2010, is to be amended as follows:

* * * * *

Paragraph 6005 Class E airspace extending upward from 700 feet or more above the surface of the earth.

AAL AK E5 Kwigillingok, AK [Revised]

Kwigillingok Airport, AK
(Lat. 59°52′35″ N., long. 163°10′07″ W)

That airspace extending upward from 700 feet above the surface within a 6.6-mile radius of the Kwigillingok Airport, AK and that airspace extending upward from 1,200 feet above the surface within a 74-mile radius of the Kwigillingok Airport, AK., excluding that area outside 12 miles from the shoreline within Norton Sound Low.

Issued in Anchorage, AK, on August 19, 2011.

Marshall G. Severson,

Acting Manager, Alaska Flight Services.

[FR Doc. 2011–22229 Filed 8–30–11; 8:45 am]

BILLING CODE 4910–13–P

DEPARTMENT OF TRANSPORTATION

Federal Aviation Administration

14 CFR Part 71

[Docket No. FAA–2011–0865; Airspace Docket No. 11–AAL–14]

Proposed Amendment of Class E Airspace Galbraith Lake, AK

AGENCY: Federal Aviation Administration (FAA), DOT.

ACTION: Notice of proposed rulemaking (NPRM).

SUMMARY: This action proposes to amend Class E airspace at Galbraith Lake AK. The creation of two special instrument approach procedures at the Galbraith Lake Airport has made this action necessary to enhance safety and management of Instrument Flight Rules (IFR) operations.

DATES: Comments must be received on or before October 17, 2011.

ADDRESSES: Send comments on the proposal to the Docket Management Facility, U.S. Department of Transportation, 1200 New Jersey Avenue, SE., West Building Ground Floor, Room W12–140, Washington, DC 20590–0001. You must identify the docket number FAA–2011–0865/ Airspace Docket No. 11–AAL–14 at the beginning of your comments. You may also submit comments on the Internet at *http://www.regulations.gov.* You may review the public docket containing the proposal, any comments received, and any final disposition in person in the Dockets Office between 9 a.m. and 5 p.m., Monday through Friday, except Federal holidays. The Docket Office (telephone 1–800–647–5527) is on the plaza level of the Department of Transportation NASSIF Building at the above address.

An informal docket may also be examined during normal business hours at the office of the Manager, Safety, Alaska Flight Service Operations, Federal Aviation Administration, 222 West 7th Avenue, Box 14, Anchorage, AK 99513–7587.

FOR FURTHER INFORMATION CONTACT: Martha Dunn, Federal Aviation Administration, 222 West 7th Avenue, Box 14, Anchorage, AK 99513–7587; telephone number (907) 271–5898; fax: (907) 271–2850; *e-mail: Martha.ctr.Dunn@faa.gov. Internet address: http://www.faa.gov/about/ office_org/headquarters_offices/ato/ service_units/systemops/fs/alaskan/ rulemaking/.*

SUPPLEMENTARY INFORMATION:

Comments Invited

Interested parties are invited to participate in this proposed rulemaking by submitting such written data, views, or arguments as they may desire. Comments that provide the factual basis supporting the views and suggestions presented are particularly helpful in developing reasoned regulatory decisions on the proposal. Comments are specifically invited on the overall regulatory, aeronautical, economic, environmental, and energy-related aspects of the proposal. Communications should identify both docket numbers and be submitted in triplicate to the address listed above. Commenters wishing the FAA to acknowledge receipt of their comments on this notice must submit with those comments a self-addressed, stamped postcard on which the following statement is made: ''Comments to Docket No. FAA–2011–0865/Airspace Docket No. 11–AAL–14.'' The postcard will be date/time stamped and returned to the commenter.

All communications received on or before the specified closing date for comments will be considered before taking action on the proposed rule. The proposal contained in this notice may be changed in light of comments received. All comments submitted will be available for examination in the public docket both before and after the closing date for comments. A report summarizing each substantive public contact with FAA personnel concerned with this rulemaking will be filed in the docket.

Availability of NPRMs

An electronic copy of this document may be downloaded through the Internet at *http://www.regulations.gov.* Recently published rulemaking documents can also be accessed through the FAA's web page at *http:// www.faa.gov/airports_airtraffic/air_ traffic/publications/airspace_ amendments/.*

Additionally, any person may obtain a copy of this notice by submitting a request to the Federal Aviation Administration, Office of Air Traffic Airspace Management, ATA–400, 800 Independence Avenue, SW., Washington, DC 20591 or by calling (202) 267–8783. Communications must identify both docket numbers for this notice. Persons interested in being placed on a mailing list for future NPRMs should contact the FAA's Office of Rulemaking, (202) 267–9677, to request a copy of Advisory Circular No. 11–2A, Notice of Proposed Rulemaking

Distribution System, which describes the application procedure.

The Proposal

This action proposes to amend Title 14 Code of Federal Regulations (14 CFR) part 71 by revising Class E5 airspace at the Galbraith Lake Airport in Galbraith Lake, AK, to accommodate the creation of two special instrument approach procedures at the Galbraith Lake Airport. These special instrument approach procedures were created in 2009, and the need for Class E transition area airspace upward from 1200 feet above the surface was only recently identified. This amended Class E airspace would provide adequate controlled airspace upward from the 700 feet and 1,200 feet above the surface, for the safety and management of IFR operations at the Galbraith Lake Airport.

Class E5 airspace areas designated as 700 and 1200 foot transition areas are published in paragraph 6005 in FAA Order 7400.9U, Airspace Designations and Reporting Points, signed August 18, 2010, and effective September 15, 2010, which is incorporated by reference in 14 CFR 71.1. The airspaces listed in this document would be subsequently published in that Order.

The FAA has determined that this proposed regulation only involves an established body of technical regulations for which frequent and routine amendments are necessary to keep them operationally current. It, therefore—(1) Is not a ''significant regulatory action'' under Executive Order 12866; (2) is not a ''significant rule'' under DOT Regulatory Policies and Procedures (44 FR 11034; February 26, 1979); and (3) does not warrant preparation of a regulatory evaluation as the anticipated impact is so minimal. Because this is a routine matter that will only affect air traffic procedures and air navigation, it is certified that this rule, when promulgated, will not have a significant economic impact on a substantial number of small entities under the criteria of the Regulatory Flexibility Act.

The FAA's authority to issue rules regarding aviation safety is found in Title 49 of the United States Code. Subtitle 1, Section 106 describes the authority of the FAA Administrator. Subtitle VII, Aviation Programs, describes in more detail the scope of the agency's authority.

This rulemaking is promulgated under the authority described in subtitle VII, part A, subpart 1, Section 40103, Sovereignty and use of airspace. Under that section, the FAA is charged with prescribing regulations to ensure the safe and efficient use of the navigable airspace. This regulation is within the scope of that authority because it proposes to revise Class E airspace at the Galbraith Lake Airport, Galbraith Lake, AK, and represents the FAA's continuing effort to safely and efficiently use the navigable airspace.

List of Subjects in 14 CFR Part 71

Airspace, Incorporation by reference, Navigation (air).

The Proposed Amendment

In consideration of the foregoing, the Federal Aviation Administration proposes to amend 14 CFR part 71 as follows:

PART 71—DESIGNATION OF CLASS A, B, C, D, AND E AIRSPACE AREAS; AIR TRAFFIC SERVICE ROUTES; AND REPORTING POINTS

1. The authority citation for 14 CFR part 71 continues to read as follows:

Authority: 49 U.S.C. 106(g), 40103, 40113, 40120; E.O. 10854, 24 FR 9565, 3 CFR, 1959–1963 Comp., p. 389.

§ 71.1 [Amended]

2. The incorporation by reference in 14 CFR 71.1 of Federal Aviation Administration Order 7400.9U, *Airspace Designations and Reporting Points,* signed August 18, 2010, and effective September 15, 2010, is to be amended as follows:

* * * * *

Paragraph 6005 Class E airspace extending upward from 700 feet or more above the surface of the earth.

AAL AK E5 Galbraith Lake, AK [Revised]

Galbraith Lake Airport, AK
(Lat. 68°28′47″ N., long. 149°29′24″ W)

That airspace extending upward from 700 feet above the surface within a 9.5-mile radius of the Galbraith Lake Airport, AK and that airspace extending upward from 1,200 feet above the surface within a 62-mile radius of the Galbraith Lake Airport, AK.

Issued in Anchorage, AK, on August 19, 2011.

Marshall G. Severson,

Acting Manager, Alaska Flight Services.

[FR Doc. 2011–22228 Filed 8–30–11; 8:45 am]

BILLING CODE 4910–13–P

DEPARTMENT OF TRANSPORTATION

Federal Aviation Administration

14 CFR Part 71

[Docket No. FAA–2010–1328; Airspace Docket No. 10–AEA–26]

Proposed Amendment of Class D and Class E Airspace; Baltimore, MD

AGENCY: Federal Aviation Administration (FAA), DOT.

ACTION: Notice of proposed rulemaking (NPRM).

SUMMARY: This action proposes to amend Class D and Class E Airspace at Baltimore, MD, as the Martin Non-Directional Beacon (NDB) has been decommissioned and new Standard Instrument Approach Procedures have been developed at Martin State Airport. This action would also update the geographic coordinates of the Baltimore VORTAC. This action would enhance the safety and airspace management of Instrument Flight Rules (IFR) operations at the airport.

DATES: Comments must be received on or before October 17, 2011. The Director of the Federal Register approves this incorporation by reference action under title 1, Code of Federal Regulations, part 51, subject to the annual revision of FAA, Order 7400.9 and publication of conforming amendments.

ADDRESSES: Send comments on this rule to: U.S. Department of Transportation, Docket Operations, West Building Ground Floor, Room W12–140, 1200 New Jersey Avenue, SE., Washington, DC 20590–0001; Telephone: 1–800–647–5527; Fax: 202–493–2251. You must identify the Docket Number FAA–2010–1328; Airspace Docket No. 10–AEA–26, at the beginning of your comments. You may also submit and review received comments through the Internet at *http://www.regulations.gov.*

FOR FURTHER INFORMATION CONTACT: John Fornito, Operations Support Group, Eastern Service Center, Federal Aviation Administration, P.O. Box 20636, Atlanta, Georgia 30320; telephone (404) 305–6364.

SUPPLEMENTARY INFORMATION:

Comments Invited

Interested persons are invited to comment on this rule by submitting such written data, views, or arguments, as they may desire. Comments that provide the factual basis supporting the views and suggestions presented are particularly helpful in developing reasoned regulatory decisions on the proposal. Comments are specifically

invited on the overall regulatory, aeronautical, economic, environmental, and energy-related aspects of the proposal.

Communications should identify both docket numbers (FAA Docket No. FAA–2010–1328; Airspace Docket No. 10–AEA–26) and be submitted in triplicate to the Docket Management System (see **ADDRESSES** section for address and phone number). You may also submit comments through the Internet at *http://www.regulations.gov.*

Annotators wishing the FAA to acknowledge receipt of their comments on this action must submit with those comments a self-addressed stamped postcard on which the following statement is made: ''Comments to Docket No. FAA–2010–1328; Airspace Docket No. 10–AEA–26.'' The postcard will be date/time stamped and returned to the commenter.

All communications received before the specified closing date for comments will be considered before taking action on the proposed rule. The proposal contained in this notice may be changed in light of the comments received. A report summarizing each substantive public contact with FAA personnel concerned with this rulemaking will be filed in the docket.

Availability of NPRMs

An electronic copy of this document may be downloaded from and comments submitted through *http://www.regulations.gov.* Recently published rulemaking documents can also be accessed through the FAA's Web page at *http://www.faa.gov/airports_airtraffic/air_traffic/publications/airspace_amendments/.*

You may review the public docket containing the proposal, any comments received, and any final disposition in person in the Dockets Office (see the **ADDRESSES** section for address and phone number) between 9 a.m. and 5 p.m., Monday through Friday, except Federal Holidays. An informal docket may also be examined during normal business hours at the office of the Eastern Service Center, Federal Aviation Administration, room 210, 1701 Columbia Avenue, College Park, Georgia 30337.

Persons interested in being placed on a mailing list for future NPRMs should contact the FAA's Office of Rulemaking, (202) 267–9677, to request a copy of Advisory circular No. 11–2A, Notice of Proposed Rulemaking distribution System, which describes the application procedure.

The Proposal

The FAA is considering an amendment to Title 14, Code of Federal Regulations (14 CFR) part 71 to amend Class D airspace and Class E surface airspace at Martin State Airport, Baltimore, MD. Airspace reconfiguration is necessary due to the decommissioning of the Martin NDB and cancellation of the NDB approach, and for continued safety and management of IFR operations at the airport. The geographic coordinates for the Baltimore VORTAC also would be adjusted to coincide with the FAAs aeronautical database.

Class D and E airspace designations are published in Paragraph 5000, 6002, and 6004 of FAA order 7400.9U, dated August 18, 2010, and effective September 15, 2010, which is incorporated by reference in 14 CFR 71.1. The Class D and E airspace designations listed in this document would be published subsequently in the Order.

The FAA has determined that this proposed regulation only involves an established body of technical regulations for which frequent and routine amendments are necessary to keep them operationally current. It, therefore, (1) Is not a ''significant regulatory action'' under Executive Order 12866; (2) is not a ''significant rule'' under DOT Regulatory Policies and Procedures (44 FR 11034; February 26, 1979); and (3) does not warrant preparation of a Regulatory Evaluation as the anticipated impact is so minimal. Since this is a routine matter that will only affect air traffic procedures and air navigation, it is certified that this proposed rule, when promulgated, would not have a significant economic impact on a substantial number of small entities under the criteria of the Regulatory Flexibility Act.

The FAA's authority to issue rules regarding aviation safety is found in Title 49 of the United States Code. Subtitle I, Section 106 describes the authority of the FAA Administrator. Subtitle VII, Aviation Programs, describes in more detail the scope of the agency's authority. This proposed rulemaking is promulgated under the authority described in Subtitle VII, Part, A, Subpart I, Section 40103. Under that section, the FAA is charged with prescribing regulations to assign the use of airspace necessary to ensure the safety of aircraft and the efficient use of airspace. This proposed regulation is within the scope of that authority as it would amend Class D and E airspace at Martin State Airport, Baltimore, MD.

Lists of Subjects in 14 CFR Part 71

Airspace, Incorporation by reference, Navigation (air).

The Proposed Amendment

In consideration of the foregoing, the Federal Aviation Administration proposes to amend 14 CFR part 71 as follows:

PART 71—DESIGNATION OF CLASS A, B, C, D, AND E AIRSPACE AREAS; AIR TRAFFIC SERVICE ROUTES; AND REPORTING POINTS

1. The authority citation for part 71 continues to read as follows:

Authority: 49 U.S.C. 106(g); 40103, 40113, 40120; E.O. 10854, 24 FR 9565, 3 CFR, 1959–1963 Comp., p. 389.

§ 71.1 [Amended]

2. The incorporation by reference in 14 CFR 71.1 of Federal Aviation Administration Order 7400.9U, Airspace Designations and Reporting Points, dated August 18, 2010, effective September 15, 2010, is amended as follows:

Paragraph 5000 Class D airspace.

* * * * *

AEA MD D Baltimore, Martin State Airport, MD [Amended]

Martin State Airport, Baltimore, MD
(Lat. 39°19′32″ N., long. 76°24′50″ W.)
Baltimore VORTAC
(Lat. 39°10′12″ N., long. 76°39′30″ W.)

That airspace extending upward from the surface to and including 2,500 feet MSL within a 5.2-mile radius of the Martin State Airport and within 4.4 miles each side of a 14.7-mile radius arc of the Baltimore VORTAC extending clockwise from the Baltimore VORTAC 030° radial to the VORTAC 046° radial, excluding that airspace within the Washington Tri-Area Class B airspace area and Restricted Areas R–4001A and R–4001B when they are in effect. This Class D airspace area is effective during the specific dates and times established in advance by a Notice to Airmen. The effective date and time will thereafter be continuously published in the Airport/Facility Directory.

Paragraph 6002 Class E airspace designated as surface areas.

* * * * *

AEA MD E2 Baltimore, Martin State Airport, MD [Amended]

Martin State Airport, MD
(Lat. 39°19′32″ N., long. 76°24′50″ W.)
Baltimore VORTAC
(Lat. 39°10′12″ N., long. 76°39′30″ W.)

Within a 5.2-mile radius of the Martin State Airport and within 4.4 miles each side of a 14.7-mile radius arc of the Baltimore VORTAC extending clockwise from the Baltimore VORTAC 030° radial to the VORTAC 046° radial, excluding that airspace within the Washington Tri-Area Class B

airspace area and Restricted Areas R–4001A and R–4001B when they are in effect. This Class E airspace area is effective during the specific dates and times established in advance by a Notice to Airmen. The effective date and time will thereafter be continuously published in the Airport/Facility Directory.

Paragraph 6004 Class E airspace designated as an extension to a class D surface area.

* * * * *

AEA MD E4 Baltimore, Martin State Airport, MD [Amended]

Martin State Airport, MD
(Lat. 39°19′32″ N., long. 76°24′50″ W.)

That airspace extending upward from the surface within 4 miles each side of a 134° bearing from the Martin State Airport extending from the 5.2-mile radius of the Martin State Airport to 9.2 miles southeast of the airport, excluding that airspace within the Washington Tri-Area Class B airspace area and Restricted Areas R–4001A and R–4001B when they are in effect. This Class E airspace area is effective during the specific dates and times established in advance by a Notice to Airmen. The effective date and time will thereafter be continuously published in the Airport/Facility Directory.

Issued in College Park, Georgia, on August 19, 2011.

Mark D. Ward,

Manager, Operations Support Group, Eastern Service Center, Air Traffic Organization.

[FR Doc. 2011–22319 Filed 8–30–11; 8:45 am]

BILLING CODE 4910–13–P

DEPARTMENT OF TRANSPORTATION

Federal Aviation Administration

14 CFR Part 71

[Docket No. FAA–2011– 0766; Airspace Docket No. 11–AEA–19]

Proposed Establishment of Class E Airspace; Danville, PA

AGENCY: Federal Aviation Administration (FAA), DOT.

ACTION: Notice of proposed rulemaking (NPRM).

SUMMARY: This action proposes to establish Class E Airspace at Danville, PA, to accommodate new Area Navigation (RNAV) Global Positioning System (GPS) Standard Instrument Approach Procedures at Danville Airport. This action would enhance the safety and airspace management of Instrument Flight Rules (IFR) operations at the airport.

DATES: Comments must be received on or before October 17, 2011.

ADDRESSES: Send comments on this rule to: U.S. Department of Transportation, Docket Operations, West Building Ground Floor, Room W12–140, 1200 New Jersey Avenue, SE., Washington, DC 20590–0001; Telephone: 1–800–647–5527; Fax: 202–493–2251. You must identify the Docket Number FAA–2011–0766; Airspace Docket No. 11–AEA–19, at the beginning of your comments. You may also submit and review received comments through the Internet at *http://www.regulations.gov.*

FOR FURTHER INFORMATION CONTACT: John Fornito, Operations Support Group, Eastern Service Center, Federal Aviation Administration, P.O. Box 20636, Atlanta, Georgia 30320; telephone (404) 305–6364.

SUPPLEMENTARY INFORMATION:

Comments Invited

Interested persons are invited to comment on this rule by submitting such written data, views, or arguments, as they may desire. Comments that provide the factual basis supporting the views and suggestions presented are particularly helpful in developing reasoned regulatory decisions on the proposal. Comments are specifically invited on the overall regulatory, aeronautical, economic, environmental, and energy-related aspects of the proposal.

Communications should identify both docket numbers (FAA Docket No. FAA–2011–0766; Airspace Docket No. 11–ASO–19) and be submitted in triplicate to the Docket Management System (see **ADDRESSES** section for address and phone number). You may also submit comments through the Internet at *http://www.regulations.gov.*

Annotators wishing the FAA to acknowledge receipt of their comments on this action must submit with those comments a self-addressed stamped postcard on which the following statement is made: ''Comments to Docket No. FAA–2011–0766; Airspace Docket No. 11–ASO–19.'' The postcard will be date/time stamped and returned to the commenter.

All communications received before the specified closing date for comments will be considered before taking action on the proposed rule. The proposal contained in this notice may be changed in light of the comments received. A report summarizing each substantive public contact with FAA personnel concerned with this rulemaking will be filed in the docket.

Availability of NPRMs

An electronic copy of this document may be downloaded from and comments submitted through *http://www.regulations.gov.* Recently published rulemaking documents can also be accessed through the FAA's Web page at *http://www.faa.gov/airports_airtraffic/air_traffic/publications/airspace_amendments/.*

You may review the public docket containing the proposal, any comments received and any final disposition in person in the Dockets Office (see the **ADDRESSES** section for address and phone number) between 9 a.m. and 5 p.m., Monday through Friday, except Federal Holidays. An informal docket may also be examined during normal business hours at the office of the Eastern Service Center, Federal Aviation Administration, room 340, 1701 Columbia Avenue, College Park, Georgia 30337.

Persons interested in being placed on a mailing list for future NPRMs should contact the FAA's Office of Rulemaking, (202) 267–9677, to request a copy of Advisory circular No. 11–2A, Notice of Proposed Rulemaking distribution System, which describes the application procedure.

The Proposal

The FAA is considering an amendment to Title 14, Code of Federal Regulations (14 CFR) part 71 to establish Class E airspace at Danville, PA, providing the controlled airspace required to support the new RNAV GPS standard instrument approach procedures for Danville Airport. Controlled airspace extending upward from 700 feet above the surface would be established for the safety and management of IFR operations at the airport.

Class E airspace designations are published in Paragraph 6005 of FAA Order 7400.9U, dated August 18, 2010, and effective September 15, 2010, which is incorporated by reference in 14 CFR 71.1. The Class E airspace designation listed in this document will be published subsequently in the Order.

The FAA has determined that this proposed regulation only involves an established body of technical regulations for which frequent and routine amendments are necessary to keep them operationally current. It, therefore, (1) Is not a ''significant regulatory action'' under Executive Order 12866; (2) is not a ''significant rule'' under DOT Regulatory Policies and Procedures (44 FR 11034; February 26, 1979); and (3) does not warrant preparation of a Regulatory Evaluation as the anticipated impact is so minimal. Since this is a routine matter that will only affect air traffic procedures and air navigation, it is certified that this proposed rule, when promulgated, would not have a significant economic impact on a substantial number of small

entities under the criteria of the Regulatory Flexibility Act.

The FAA's authority to issue rules regarding aviation safety is found in Title 49 of the United States Code. Subtitle I, Section 106 describes the authority of the FAA Administrator. Subtitle VII, Aviation Programs, describes in more detail the scope of the agency's authority. This proposed rulemaking is promulgated under the authority described in Subtitle VII, Part, A, Subpart I, Section 40103. Under that section, the FAA is charged with prescribing regulations to assign the use of airspace necessary to ensure the safety of aircraft and the efficient use of airspace. This proposed regulation is within the scope of that authority as it would establish Class E airspace at Danville Airport, Danville, PA.

Lists of Subjects in 14 CFR Part 71

Airspace, Incorporation by reference, Navigation (air).

The Proposed Amendment

In consideration of the foregoing, the Federal Aviation Administration proposes to amend 14 CFR part 71 as follows:

PART 71—DESIGNATION OF CLASS A, B, C, D, AND E AIRSPACE AREAS; AIR TRAFFIC SERVICE ROUTES; AND REPORTING POINTS

1. The authority citation for part 71 continues to read as follows:

Authority: 49 U.S.C. 106(g); 40103, 40113, 40120; E.O. 10854, 24 FR 9565, 3 CFR, 1959–1963 Comp., p. 389.

§ 71.1 [Amended]

2. The incorporation by reference in 14 CFR 71.1 of Federal Aviation Administration Order 7400.9U, Airspace Designations and Reporting Points, dated August 18, 2010, effective September 15, 2010, is amended as follows:

Paragraph 6005 Class E airspace areas extending upward from 700 feet or more above the surface of the earth.

* * * * *

AEA PA E5 Danville, PA [New]

Danville Airport, PA
(Lat. 40°56′90″ N., long. 76°38′64″ W.)

That airspace extending upward from 700 feet above the surface within a 10.7-mile radius of Danville Airport.

Issued in College Park, Georgia, on August 19, 2011.

Mark D. Ward,

Manager, Operations Support Group, Eastern Service Center, Air Traffic Organization.

[FR Doc. 2011–22317 Filed 8–30–11; 8:45 am]

BILLING CODE 4910–13–P

DEPARTMENT OF TRANSPORTATION

Federal Highway Administration

23 CFR Part 655

[FHWA Docket No. FHWA–2010–0159]

RIN 2125–AF43

National Standards for Traffic Control Devices; the Manual on Uniform Traffic Control Devices for Streets and Highways; Revision

AGENCY: Federal Highway Administration (FHWA), Department of Transportation (DOT).

ACTION: Notice of proposed amendments; request for comments.

SUMMARY: The MUTCD is incorporated in our regulations, approved by the Federal Highway Administration, and recognized as the national standard for traffic control devices used on all streets, highways, bikeways, and private roads open to public travel. The FHWA proposes to revise certain information relating to target compliance dates for traffic control devices. Consistent with Executive Order 13563, and in particular its emphasis on burden-reduction and on retrospective analysis of existing rules, the proposed changes are intended to reduce the costs and impacts of compliance dates on State and local highway agencies and to streamline and simplify the information.

DATES: Comments must be received on or before October 31, 2011. Late comments will be considered to the extent practicable.

ADDRESSES: Mail or hand deliver comments to the U.S. Department of Transportation, Dockets Management Facility, 1200 New Jersey Avenue, SE., Washington, DC 20590, or submit electronically at *http://www.regulations.gov* or fax comments to (202) 493–2251. All comments should include the docket number that appears in the heading of this document. All comments received will be available for examination and copying at the above address from 9 a.m. to 5 p.m., E.T., Monday through Friday, except Federal holidays. Those desiring notification of receipt of comments must include a self-addressed, stamped postcard or may print the acknowledgment page that appears after submitting comments electronically. Anyone is able to search the electronic form of all comments received into any of our dockets by the name of the individual submitting the comment (or signing the comment, if submitted on behalf of an association, business, labor union, *etc.*). You may review DOT's complete Privacy Act Statement in the **Federal Register** published on April 11, 2000 (Volume 65, Number 70, Page 19477–78) or you may visit *http://dms.dot.gov.*

FOR FURTHER INFORMATION CONTACT: Mr. Hari Kalla, Office of Transportation Operations, (202) 366–5915; or Mr. William Winne, Office of the Chief Counsel, (202) 366–1397, Federal Highway Administration, 1200 New Jersey Ave., SE., Washington, DC 20590. Office hours are from 8 a.m. to 4:30 p.m., E.T., Monday through Friday, except Federal holidays.

SUPPLEMENTARY INFORMATION:

Electronic Access and Filing

This document, the notice of and request for comments, and all comments received may be viewed online through the Federal eRulemaking portal at *http://www.regulations.gov.* Electronic submission and retrieval help and guidelines are available under the help section of the Web site. It is available 24 hours each day, 365 days each year. Please follow the instructions. An electronic copy of this document may also be downloaded from the Office of the Federal Register's home page at: *http://www.archives.gov* and the Government Printing Office's Web page at: *http://www.access.gpo.gov/nara.*

To help make the FHWA's docket comment review process more efficient, the FHWA requests that commenters cite the Section number identified in Table I–2 for any comment to the docket about a specific proposed revision to the text of the table.

Background

When new provisions are adopted in a new edition or revision of the MUTCD, any new or reconstructed traffic control devices installed after adoption are required to be in compliance with the new provisions. For existing devices in the field that do not comply with the new MUTCD provisions, 23 CFR 655.603(d)(1), authorizes the FHWA to establish target compliance dates for compliance of particular existing devices. Table I–2 in the Introduction of the 2009 edition of the MUTCD lists 58 specific provisions for which the FHWA has established target compliance dates for upgrading existing devices in the field via the Federal rulemaking process in Final Rules issued in 2000,[1] 2003,[2] 2007,[3] and 2009.[4]

In the absence of a specific target compliance date, existing devices in the

[1] 65 FR 78923, December 18, 2000.
[2] 68 FR 65496, November 20, 2003.
[3] 72 FR 72574, December 21, 2007.
[4] 74 FR 66732, December 16, 2009.

field that do not meet the new MUTCD provisions are expected to be upgraded by highway agencies over time to meet the new provisions via a systematic upgrading process as required by 23 CFR 655.603(d)(1), but there are no specific dates for required completion of the upgrades. Systematic upgrading programs enable highway agencies to prioritize traffic control upgrades based on a variety of factors such as relative safety needs, costs, and available resources. Agencies can decide, where appropriate, to defer upgrading certain non-compliant devices until the device wears out, is damaged or destroyed, or is replaced.

In response to concerns about the potential costs and impact of previously adopted MUTCD compliance dates on State and local governments in the current economic climate, on November 30, 2010, the FHWA published in the **Federal Register** a Request for Comments [5] on traffic control device compliance dates. The FHWA asked for responses to a series of seven questions about compliance dates, their benefits and potential economic impacts, especially economic hardships to State and local governments that might result from specific target compliance dates for upgrading certain non-compliant existing devices.

By the end of the comment period, the FHWA received 592 letters to the docket. The comments were submitted by 360 private citizens, 168 local government highway agencies, 28 State DOTs, 16 industry representatives, 6 national associations representing practitioners, 5 national associations representing safety advocates, 5 elected officials, and 4 traffic engineering consultants.

The overwhelming majority of comments from all responders addressed the target compliance dates associated with maintaining minimum levels of sign retroreflectivity and with minimum letter heights for street name signs. There were also many comments from private citizens expressing concerns about requiring the use of mixed-case lettering for street name signs and other guide signs.

Comments from private citizens were evenly balanced between support for and opposition to compliance dates for upgrading existing signs that do not meet minimum levels of retroreflectivity. Often emphasizing the current economic climate, local highway agencies predominantly expressed concerns about the target compliance dates for sign retroreflectivity because of economic concerns. Similarly, State DOTs and national associations representing practitioners generally suggested that all dates should be eliminated or extended because of current economic conditions. Representatives of the traffic control materials industry and national safety associations supported retaining all existing compliance dates for safety reasons, often specifically citing concerns about the needs of older road users. Also, a variety of comments indicated confusion about target compliance dates in general and that the number and complexity of compliance dates listed in Table I–2 makes it difficult for agencies to understand what is required in order to take appropriate actions.

In general, the FHWA has intended that target compliance dates coincide with the useful service life of the devices that would need to be replaced to meet any new requirements, thus minimizing economic and logistical impacts on highway agencies. This approach is consistent with Executive Order 13563 and in particular its emphasis on the avoidance of unjustified costs. Some comments indicated that variations in climate and other environmental conditions around the country may result in considerably longer useful service lives of certain devices than the estimates used by the FHWA in establishing the compliance dates. In such cases, compliance dates can create an undue burden for the agency, requiring device replacement before the end of actual useful service life.

The FHWA has carefully reviewed and considered all of the comments received in response to the request for comments. It has decided to propose revisions to Table I–2 to simplify it and reduce the impacts of target compliance dates on agencies by eliminating, extending, or otherwise revising most of the dates. This approach is consistent with the requirements of Executive Order 13563, including its emphasis on consideration of benefits and costs (sections 1(a) and 1(b)), its requirement of an open exchange of information with stakeholders (section 2(a)), and, in particular, its call for retrospective analysis of existing rules, including streamlining and modification to make such rules less burdensome (section 6). This approach is also consistent with Presidential Memorandum, Administrative Flexibility, which calls for reducing burdens and promoting flexibility for State and local governments.

Proposed Amendment

Of the 58 items for which target compliance dates are currently listed in Table I–2, the FHWA proposes to eliminate altogether the compliance dates for 46 items (8 that have already expired and 38 that have future compliance dates) and to extend and/or revise the dates for 4 items. We are not proposing a change for the dates for the other eight items, which actually represent only six specific requirements in the MUTCD, since three of the eight items are all related to the required use of high-visibility apparel by workers in the right-of-way. For these six requirements, the compliance dates would remain in effect.

A summary of the specific proposed changes in Table I–2 of the MUTCD is included in the following section.

The text of this proposed revision to the 2009 edition of the MUTCD is available for inspection and copying, as prescribed in 49 CFR part 7, at the FHWA Office of Transportation Operations (HOTO–1), 1200 New Jersey Avenue, SE., Washington, DC 20590. Furthermore, the text of the proposed revision is available on the MUTCD Internet Web site *http://mutcd.fhwa.dot.gov* and on the docket for this rulemaking at *http://www.regulations.gov.* The proposed text is available in two formats. The first format shows the current MUTCD text of Table I–2 with proposed additions in blue, underlined text and proposed deletions as red strikeout text. The second format shows a ''clean'' version of Table I–2, with all the proposed changes incorporated. The complete 2009 edition of the MUTCD is also available on the same Internet Web site.

This NPA is being issued to provide an opportunity for public comment on the desirability of these proposed amendments to the MUTCD. The FHWA is interested in receiving comments regarding the safety benefits provided by traffic device uniformity, the costs and other burdens associated with achieving compliance for existing non-compliant devices, and the proposed revisions, extensions, eliminations, and retention of compliance dates outlined in this notice. In all cases, and consistent with Executive Order 13563, section 2, the FHWA seeks comments not only on its proposals but also on possible alternative approaches. Based on the comments received and its own experience, the FHWA may issue a Final Rule concerning the proposed changes included in this notice.

[5] 75 FR 74128, November 30, 2010.

Discussion of Proposed Amendments to Table I–2

1. The FHWA proposes to eliminate target compliance dates, which were based on estimated useful service lives, for 33 items in Table I–2 that were established in the Final Rules for the 2000 and 2003 editions of the MUTCD, that have not yet expired. These 33 target compliance dates proposed for elimination are for provisions in Sections 2B.03, 2B.10, 2B.11, 2B.13, 2B.26, 2B.55, 2C.04, 2C.13, 2C.20, 2C.38, 2C.40, 2C.41, 2C.42, 2C.46, 2C.49, 2C.61, 2C.63, 2D.43 (two provisions), 2D.44, 2G.01 through 2G.07, 2G.11 through 2G.15, 2H.05 and 2H.06, 2I.09, 2I.10, 2N.03, 3B.18, 4D.01, 4D.31, 4E.07, 5C.05, 7B.16, and 8C.09. These items mostly involve new or revised sign designs, including larger letter heights and/or larger sizes for some signs, and certain other changes in traffic control device design, location, or operation that have made some existing devices in the field obsolete. Based on comments received and other communications with State and local highway agencies, the FHWA believes that these 33 dates in Table I–2 may create fiscal and logistical burdens on highway agencies. Based on comments received, the FHWA believes that agencies can better organize and track the replacement or upgrade of these devices in the ordinary course of implementation of their systematic upgrading programs. Additionally, highway agencies are in the best position to make decisions on device replacements based on actual useful service lives in their particular climates and environments, rather than having a universal compliance date based on estimated useful service life. The FHWA requests comments on the safety benefits, the costs, and other burdens associated with achieving compliance for existing non-compliant devices, and the proposed elimination of these compliance dates. The FHWA also requests comments on alternative approaches, such as extending rather than eliminating these compliance dates.

2. The FHWA proposes to eliminate the target compliance dates for three items in Table I–2 that were established with the Final Rule for the 2009 edition of the MUTCD. Although these dates were recently established, the FHWA believes their elimination is warranted based on consideration of specific concerns raised in responses to the November 30, 2010, Request for Comments, as explained below. For each of these three items, the FHWA requests comments on the safety benefits, the costs, and other burdens associated with achieving compliance for these existing non-compliant devices, and the proposed elimination of these compliance dates.

The December 31, 2019, target compliance date would be eliminated for a provision in Section 2D.45 that requires multilane conventional road approaches to interchanges to have guide signs to identify which direction of turn is necessary for access to each direction of the freeway or expressway. Agencies expressed confusion about this date because they interpreted it as requiring the replacement of existing overhead sign structures (which typically have a very long useful service life, well beyond 10 years) in order to install the required new signs. The MUTCD allows post-mounted signs to be used to provide the needed information to road users about turn directions at the interchange, even if overhead sign structures are present for other signs. The FHWA believes that eliminating this target compliance date will reduce the confusion. Highway agencies will still need to install the required signs under their systematic upgrading programs, but will not have a specific date by which this must be accomplished.

The target compliance date of December 31, 2016, or at resurfacing, whichever comes first, would be eliminated for provisions in Sections 3B.04 and 3B.05 that require dotted, rather than broken, lane lines for dropped lanes and for acceleration, deceleration, and auxiliary lanes. Some agencies indicated that they have durable markings for lane lines that have a useful service life that will extend beyond the 2016 date. Some agencies also use recessed or inlaid markings, for which it is not practical to change the marking pattern from broken to dotted until the next resurfacing occurs, but resource constraints will cause the resurfacing cycle to exceed 7 years. Some agencies also indicated it would be very difficult to meet the 2016 compliance date because of the large number of individual pavement marking layout drawings for individual existing intersections and interchanges that need to be revised to show the locations and lengths of dotted lane lines before crews can be instructed to revise the markings in the field. Eliminating this target compliance date would allow agencies to implement the new marking requirement when existing lines become significantly worn to the point they can be marked over without causing road user confusion, or when resurfacing occurs.

The December 31, 2014, target compliance date for the provision in Section 8C.12 that requires a traffic queuing study of grade crossings within 200 feet of roundabouts or other circular intersections would be eliminated. Based on knowledge gained from frequent interactions with State and local agencies, the FHWA believes that there are extremely few existing roundabouts or other circular intersections within 200 feet of a grade crossing and that those that do exist have likely already been studied for queuing issues as a part of or subsequent to their original design. As roundabouts are increasingly being given consideration as an alternative to installing a traffic signal, any such considerations at locations near grade crossings will be required by the language in Section 8C.12 to be studied as a part of the process of evaluating whether to construct a roundabout.

The FHWA requests comments on the safety benefits, the costs, and other burdens associated with the proposed elimination of these compliance dates. The FHWA also requests comments on alternative approaches, such as extending rather than eliminating these compliance dates.

3. The FHWA proposes to eliminate from Table I–2 eight items for which the previously established target compliance dates have expired. These dates (pertaining to certain provisions in Sections 2B.09, 2C.30, 2C.50, 2J.05, 7B.11, 7B.12, 8B.19 and 8C.02 through 8C.05, and 9B.18) were established in the Final Rules for the 2000 and 2003 editions of the MUTCD. Elimination of these items from the table is consistent with the FHWA's previous practice of eliminating target compliance dates from subsequent MUTCD editions after they have expired. Based on frequent communications and interactions with numerous State and local highway agencies, the FHWA believes that most agencies have already upgraded these devices as their useful service lives have been reached. Although some of these non-compliant devices might still exist in the field, they are expected to be replaced with compliant devices under agencies' systematic upgrading programs. The FHWA requests comments on this proposal.

4. The FHWA proposes to revise the January 22, 2012, target compliance date that was established in December 2007, with the Final Rule for Revision 2 of the 2003 edition of the MUTCD, for the Section 2A.08 provision that requires agencies to implement an assessment or management method designed to maintain sign retroreflectivity at or above the established minimum levels.

This compliance date does not require any signs to be replaced by a given date. It requires highway agencies to implement an assessment or management method for maintaining sign retroreflectivity by the compliance date in accordance with section 406 of the Department of Transportation and Related Agencies Appropriations Act, 1993 (Pub. L. 102–388; October 6, 1992). The compliance date for this requirement would be extended to a date 2 years after the effective date of the Final Rule for this proposed revision of the MUTCD. This would provide agencies with an estimated additional 1 to 2 years to implement their chosen assessment or management method. Additionally, the FHWA proposes to make the new compliance date apply only to implementing an assessment or management method for regulatory and warning signs. The requirement in the MUTCD language to implement a method for all types of signs would remain, but there would not be a specific target compliance date for required implementation of the method for signs other than regulatory and warning signs. Based on our subject matter expertise and experience with the benefits and impacts of traffic control devices, the FHWA believes that, because of the critical safety nature of the messages they convey, especially for older road users, regulatory and warning signs constitute the highest priority for assessing retroreflectivity of existing signs. The proposed revisions to the compliance date and its applicability will provide relief and enable agencies to determine when their resources will allow them to add signs other than regulatory and warning signs to their retroreflectivity assessment or management method.

Additionally, the FHWA proposes to eliminate the two existing target compliance dates for replacement of signs that are identified using the assessment or management method as failing to meet the established minimum retroreflectivity levels. The January 22, 2015, date for regulatory, warning, and post-mounted guide (except street name) signs and the January 22, 2018, date for street name signs and overhead guide signs would both be eliminated. Without specific compliance dates for these items, agencies will still need to replace any sign they identify as not meeting the established minimum retroreflectivity levels.

The FHWA requests comments on the safety benefits, the costs, and other burdens associated with achieving compliance with this requirement, and the proposed revisions of these compliance dates. The FHWA also requests comments on alternative approaches, including retention of the current compliance dates and extending rather than eliminating some of them.

5. The FHWA proposes to revise the target compliance date of December 31, 2014, or when timing adjustments are made to the individual intersection and/or corridor, whichever occurs first, that applies to provisions on timing requirements for vehicular yellow and red clearance intervals in Section 4D.26 and pedestrian clearance intervals in Section 4E.06. These compliance dates were established with the Final Rule for the 2009 edition of the MUTCD. As noted in that Final Rule, the compliance dates were established to achieve a more rapid implementation of these new requirements at existing locations, because safety studies found that significant crash reductions were achieved where the required timing methods were used to determine the yellow and red clearance intervals, and because the FHWA believes that the new requirements for pedestrian clearance intervals are needed to provide a buffer between pedestrian movements and vehicular movements. The compliance dates were based on what FHWA believed to be the typical signal retiming frequency of about 5 years. Some agencies commented that current budgetary constraints have made it difficult to retime all of their traffic signals on a 5-year cycle. The FHWA proposes to extend the existing compliance date to a date of 5 years after the effective date of the Final Rule for this proposed revision of the MUTCD, or when timing adjustments are made to the individual intersection and/or corridor, whichever occurs first. This would provide agencies with an estimated additional 2 years to implement the new requirements of Sections 4D.26 and 4E.06 at any locations that have not already been made compliant under a previous intersection or corridor retiming.

The FHWA requests comments on the safety benefits, the costs, and other burdens associated with achieving compliance for these existing non-compliant devices, and the proposed revision of this compliance date. The FHWA also requests comments on alternative approaches, including retention of the current compliance dates and extending them for a longer period.

6. The FHWA proposes to revise and extend the compliance date for the provisions in Sections 8B.03 and 8B.04 that require a retroreflective strip on the back of Crossbuck signs and on the front and back of supports for Crossbuck signs at passive grade crossings. The existing compliance date of January 17, 2011, was established with the Final Rule for the 2000 edition of the MUTCD. The 2003 edition of the MUTCD eliminated the requirement to install the retroreflective strips on the fronts of Crossbuck sign supports, if a *Yield* or *Stop* sign is present along with the Crossbuck sign. During the last decade, the FHWA was considering establishing requirements to add a *Yield* or *Stop* sign at all passive railroad crossings. The addition of a *Yield* or *Stop* sign could necessitate replacing the Crossbuck support post in order to achieve minimum mounting heights. As a result, many railroad companies and highway agencies have deferred installing the retroreflective strips until a final decision was made on this issue in order to avoid unnecessary expense and to achieve the economies of sending sign crews to crossings only once rather than twice. The December 2009 Final Rule for the 2009 MUTCD did incorporate the requirement for YIELD or STOP signs at passive crossings in Section 8B.04, and a target compliance date for adding these signs at existing crossings was established as December 31, 2019. The January 12, 2011, compliance date for the retroreflective strips provided railroads and public agencies with only 1 year after the final decision on the rule for *Yield* or *Stop* signs to install the retroreflective strips at the thousands of crossings where such work was deferred.

The FHWA proposes to extend the target compliance date for the retroreflective strips to December 31, 2019, to coincide with the date for adding *Yield* or *Stop* signs with Crossbuck signs at passive grade crossings. As noted in the Final Rule that established the target compliance date for the retroreflective strips, the addition of such strips provides safety benefits that justify having a target compliance date, but having a single compliance date for both the retroreflective strips and the *Yield* or *Stop* signs at grade crossings is more practical. The FHWA also proposes to adjust the item for Section 8B.03 in Table I–2 to more accurately reflect that the requirements for retroreflective strips are in Section 8B.04 as well as in Section 8B.03 and to accurately reflect that the compliance date was also intended to apply to the retroreflective strips on the backs of the Crossbuck signs.

The FHWA requests comments on the safety benefits, the costs, and other burdens associated with achieving compliance for these existing non-compliant devices, and the proposed revision of this compliance date. The

FHWA also requests comments on alternative approaches, including retention of the current compliance dates and extending them for a longer period.

7. The FHWA proposes to retain the existing target compliance dates in Table I–2 for eight items that we deem to be of critical safety importance, based on existing evidence and our subject matter expertise and experience in traffic control device matters. For each of these eight items, the Final Rules establishing the compliance dates clearly identified the safety justification for such compliance dates. These justifications remain valid, as summarized below. For each of these eight items, the FHWA requests comments on the safety benefits, the costs, and other burdens associated with achieving compliance for these existing non-compliant devices, and the proposed retention of this compliance date. The FHWA also requests comments on alternative approaches, including extension of the current compliance dates.

The January 17, 2013, compliance date for Section 2A.19 provisions requiring crashworthiness of existing sign supports on roads with posted speed limits of 50 mph or higher was established in the Final Rule for the 2003 edition of the MUTCD to be consistent with information previously communicated to jurisdictions in a variety of training and presentations by the FHWA Office of Safety regarding roadside safety and countermeasures for run-off-the-road crashes. Eliminating fixed-object hazards such as non-crashworthy sign supports on high-speed roads remains a critical safety need due to the deaths and severe injuries that high-speed run-off-the-road crashes can result in when a non-crashworthy sign support is struck. Therefore, the 10-year period for compliance from the 2003 Final Rule is proposed to be retained.

The Final Rule for the 2009 edition of the MUTCD established new requirements in Section 2B.40 to install additional *One Way* signs at certain types of intersections and established a December 31, 2019, compliance date for adding the required signs at existing intersections where the signs are not in place in the required number and location. This 10-year period was established because of the demonstrated safety issues associated with wrong-way travel on divided highways, research on the needs of older drivers, and because the additional signs would provide significant safety benefits to road users. These safety benefits justify retaining the existing compliance date for installing the critically-needed *One Way* signs at existing intersections.

In Sections 2C.06 through 2C.14, revised requirements on the use of various horizontal alignment warning signs and determinations of advisory speed values were adopted in the Final Rule for the 2009 edition of the MUTCD and a compliance date of December 31, 2019, was established for any required revisions in posted advisory speeds and for installing any newly-required horizontal alignment warning signs that are not currently in place at existing curves. This 10-year compliance date was established because of the demonstrated safety issues associated with run-off-the-road crashes at horizontal curves. Fatalities at horizontal curves account for approximately 25 percent of all highway fatalities, yet horizontal curves are only a small portion of the Nation's highway mileage. The more rational and uniform posting of advisory speeds and the installation of the required additional horizontal alignment warning signs at existing locations will provide significant safety benefits to road users and a 10-year period for achieving compliance is remains appropriate.

The Final Rule for the 2009 edition of the MUTCD established new requirements in Sections 2E.31, 2E.33, and 2E.36 for the use of black-on-yellow ''*Left*'' or ''*Left Exit*'' plaques on guide signs for all left-hand freeway and expressway exits and established a compliance date of December 31, 2014, for adding such plaques to existing guide signs. This 5-year target compliance date was established to address a recommendation of the National Transportation Safety Board as a result of a significant safety concern exhibited with left-hand exits. The installation of these plaques at all existing left-hand exits within 5 years is necessary to achieve critical safety improvements for road users at left-side exits. The installation of these plaques generally does not require replacement of the existing sign or sign supports and this change affects relatively few existing locations throughout the country.

The Final Rule for the 2009 edition of the MUTCD also established new requirements in Sections 6D.03, 6E.02, and 7D.04 that all workers, including flaggers and school crossing guards, within the right-of-way of all highways, not just Federal-aid highways, must wear high-visibility apparel, and established a 2-year target compliance date of December 31, 2011. Required compliance of apparel for workers, including law enforcement officers, on Federal-aid highways has been in effect since November 24, 2008. The 2-year target compliance date for these three provisions applicable to non-Federal-aid highways was established to be consistent with the 2-year compliance period that was previously established for workers on Federal-aid highways. The December 31, 2011, compliance date remains appropriate for this low-cost, but highly critical, safety requirement and no changes are proposed to the compliance dates for Sections 6D.03, 6E.02, and 7D.04.

In Section 8B.04, as discussed above, a new requirement was adopted in the Final Rule for the 2009 edition of the MUTCD to require the use of either a *Yield* or *Stop* sign with the Crossbuck sign at all passive grade crossings, and a target compliance date of December 31, 2019, was established for adding these signs at existing crossings. This 10-year compliance date was established to promote increased safety at passive grade crossings, especially during nighttime hours. Although the new requirements involve conducting engineering studies for some locations and installing signs that do not currently exist at existing grade crossings, the existing 10-year target compliance date for installation of the required additional signs at existing locations remains appropriate.

Conclusion

The proposed revisions to Table I–2 are intended to reduce the regulatory burden and provide increased flexibility to State and local highway agencies and to enable those agencies to make decisions on when to replace or upgrade existing noncompliant devices in accordance with their own local environmental conditions and the competing priorities in their communities for a wide variety of safety-related measures that might be needed in the context of limited budgets. The proposed revisions also simplify procedures for traffic control device replacements and reinforce the principle that most noncompliant traffic control devices can be replaced in the ordinary course of routine maintenance and/or when the useful life of such devices has expired. The few items for which target compliance dates are proposed to be retained or extended are, based on FHWA's experience and subject matter expertise on traffic control device issues, considered to be essential for statutory or safety reasons and/or of relatively low-cost to implement.

It is important to understand that elimination of a compliance date for a given Standard contained in the MUTCD does not eliminate the

regulatory requirement to comply with that Standard. The Standard itself remains in the MUTCD and applies to any new installations, but the firm fixed date for replacing noncompliant devices that exist in the field is eliminated.

On April 22, 2010, a separate NPA was published in the **Federal Register** [6] proposing to revise the 2009 edition of the MUTCD regarding maintaining minimum retroreflectivity of longitudinal pavement markings. The deadline for comments to that docket has passed and the FHWA is currently reviewing the docket comments received. In that NPA, FHWA suggested that the proposed revisions regarding maintaining minimum retroreflectivity of longitudinal pavement markings would be designated as Revision 1 to the 2009 edition of the MUTCD. Actual designation of revision numbers will depend on the relative timing of any Final Rules that may be issued by the FHWA as a result of the April 22, 2010, NPA, this NPA, and any other NPAs regarding the MUTCD.

Rulemaking Analysis and Notices

Executive Order 12866 (Regulatory Planning and Review), Executive Order 13563 (Improving Regulation and Regulatory Review), and DOT Regulatory Policies and Procedures

The FHWA has determined that this action would be a significant regulatory action within the meaning of Executive Order 12866 and within the meaning of DOT regulatory policies and procedures due to the significant public interest in issues surrounding the MUTCD. This action complies with Executive Orders 12866 and 13563 to improve regulation. In particular, this action is consistent with, and can be seen as directly responsive to, the requirements of Executive Order 13563, and in particular its requirement for retrospective analysis of existing rules (section 6), with an emphasis on streamlining its regulations. This approach is also consistent with Presidential Memorandum, Administrative Flexibility, which calls for reducing burdens and promoting flexibility for State and local governments.

The proposed changes in the MUTCD would reduce burdens on State and local government in the application of traffic control devices. They would provide additional clarification, guidance, and flexibility to such governments. The uniform application of traffic control devices will greatly improve roadway safety and traffic operations efficiency. The standards, guidance, options, and support are also used to create uniformity and to enhance safety and mobility. The proposed changes in this rulemaking will not require the expenditure of funds, but rather will provide State and local governments with the flexibility to allocate scarce financial resources based on local conditions and the useful service life of its traffic control devices. It is anticipated that the economic impact of this rulemaking would be minimal and indeed costs and burdens will be reduced, not increased; therefore, a full regulatory evaluation is not required.

As noted, this action streamlines existing significant regulation to reduce burden and promote the flexibilities of State and local governments under Executive Order 13563. In response to concerns about the potential impact of previously adopted MUTCD compliance dates on State and local governments in the current economic climate, the FHWA published a Request for Comments on traffic control device compliance dates. The FHWA asked for responses to a series of seven questions about compliance dates, their benefits and potential economic impacts, especially economic hardships to State and local governments that might result from specific target compliance dates for upgrading certain non-compliant existing devices. The responses received from that notice were considered in the development of this proposal. The FHWA anticipates that this proposed rulemaking will reduce the impacts of compliance dates on State and local highway agencies and will streamline and simplify information contained in the MUTCD.

Regulatory Flexibility Act

In compliance with the Regulatory Flexibility Act (Pub. L. 96–354, 5 U.S.C. 601–612), the FHWA has evaluated the effects of these changes on small entities and anticipates that this action would not have a significant economic impact on a substantial number of small entities. This proposed rule would reduce burdens and provide clarification and additional flexibility, and would not require an expenditure of funds.

Unfunded Mandates Reform Act of 1995

This proposed rule would not impose unfunded mandates as defined by the Unfunded Mandates Reform Act of 1995 (Pub. L. 104–4, 109 Stat. 48, March 22, 1995). On the contrary, the proposed changes provide additional guidance, flexibility, and clarification and would not require an expenditure of funds. This action would not result in the expenditure by State, local, and tribal governments, in the aggregate, or by the private sector, of $140.8 million or more in any 1 year (2 U.S.C. 1532). Further, in compliance with the Unfunded Mandates Reform Act of 1995, FHWA will evaluate any regulatory action that might be proposed in subsequent stages of the proceeding to assess the effects on State, local, and tribal governments and the private sector.

Executive Order 13132 (Federalism)

This action has been analyzed in accordance with the principles and criteria contained in Executive Order 13132 dated August 4, 1999. This action would increase flexibility for State and local governments. The FHWA has determined that this action would not have sufficient federalism implications to warrant the preparation of a federalism assessment. The FHWA has also determined that this rulemaking will not preempt any State law or State regulation or affect the States' ability to discharge traditional State governmental functions. The MUTCD is incorporated by reference in 23 CFR part 655, subpart F. These proposed amendments are in keeping with the Secretary of Transportation's authority under 23 U.S.C. 109(d), 315, and 402(a) to promulgate uniform guidelines to promote the safe and efficient use of the highway. The overriding safety benefits of the uniformity prescribed by the MUTCD are shared by all of the State and local governments, and changes made to this rule are directed at enhancing safety. In general, the proposed amendments increase flexibility for States and local governments. To the extent that these proposed amendments override any existing State requirements regarding traffic control devices, they do so in the interest of national uniformity.

Executive Order 13175 (Tribal Consultation)

The FHWA has analyzed this action under Executive Order 13175, dated November 6, 2000, and believes that it would not have substantial direct effects on one or more Indian tribes; would not impose substantial direct compliance costs on Indian tribal governments; and would not preempt tribal law. Therefore, a tribal summary impact statement is not required.

Executive Order 13211 (Energy Effects)

The FHWA has analyzed this action under Executive Order 13211, Actions Concerning Regulations That Significantly Affect Energy Supply, Distribution, or Use. We have

[6] 75 FR 20935, April 22, 2010.

determined that it is not a significant energy action under that order because it is not likely to have a significant adverse effect on the supply, distribution, or use of energy. Therefore, a Statement of Energy Effects under Executive Order 13211 is not required.

Executive Order 12372 (Intergovernmental Review)

Catalog of Federal Domestic Assistance program Number 20.205, Highway Planning and Construction. The regulations implementing Executive Order 12372 regarding intergovernmental consultation on Federal programs and activities apply to this program.

Paperwork Reduction Act

Under the Paperwork Reduction Act of 1995 (PRA) (44 U.S.C. 3501, *et seq.*), Federal agencies must obtain approval from the Office of Management and Budget for each collection of information they conduct, sponsor, or require through regulations. The FHWA has determined that this action does not contain collection information requirements for purposes of the PRA.

Executive Order 12988 (Civil Justice Reform)

This action meets applicable standards in sections 3(a) and 3(b)(2) of Executive Order 12988, Civil Justice Reform, to minimize litigation, eliminate ambiguity, and reduce burden.

Executive Order 13045 (Protection of Children)

The FHWA has analyzed this action under Executive Order 13045, Protection of Children from Environmental Health Risks and Safety Risks. The FHWA certifies that this action would not concern an environmental risk to health or safety that might disproportionately affect children.

Executive Order 12630 (Taking of Private Property)

The FHWA does not anticipate that this action would affect a taking of private property or otherwise have taking implications under Executive Order 12630, Governmental Actions and Interference with Constitutionally Protected Property Rights.

National Environmental Policy Act

The agency has analyzed this action for the purpose of the National Environmental Policy Act of 1969 (42 U.S.C. 4321–4347) and has determined that it would not have any effect on the quality of the environment.

Regulation Identification Number

A regulation identification number (RIN) is assigned to each regulatory action listed in the Unified Agenda of Federal Regulations. The Regulatory Information Service Center publishes the Unified Agenda in April and October of each year. The RIN contained in the heading of this document can be used to cross reference this action with the Unified Agenda.

List of Subjects in 23 CFR Part 655

Design standards, Grant programs—transportation, Highways and roads, Incorporation by reference, Signs, Traffic regulations.

Issued on: August 23, 2011.

Victor M. Mendez,

Administrator.

In consideration of the foregoing, the FHWA proposes to amend title 23, Code of Federal Regulations part 655 as follows:

PART 655—TRAFFIC OPERATIONS

1. The authority citation for part 655 continues to read as follows:

Authority: 23 U.S.C. 101(a), 104, 109(d), 114(a), 217, 315, and 402(a); 23 CFR 1.32; and, 49 CFR 1.48(b).

Subpart F—Traffic Control Devices on Federal-Aid and Other Streets and Highways—[Amended]

2. Revise § 655.601(a), to read as follows:

§ 655.601 Purpose.

* * * * *

(a) Manual on Uniform Traffic Control Devices for Streets and Highways (MUTCD), 2009 Edition, with Revision(s) number _____ [revision number to be inserted] incorporated, FHWA, dated _____ [date to be inserted]. This publication is incorporated by reference in accordance with 5 U.S.C. 552(a) and 1 CFR part 51 and is on file at the National Archives and Records Administration (NARA). For information on the availability of this material at NARA call (202) 741–6030, or go to *http://www.archives.gov/federal_register/code_of_federal_regulations/ibr_locations.html.* It is available for inspection and copying at the Federal Highway Administration, 1200 New Jersey Avenue, SE., Washington, DC 20590, telephone 202–366–1993, as provided in 49 CFR part 7. The text is also available from the FHWA Office of Operations Web site at: *http://mutcd.fhwa.dot.gov.*

* * * * *

[FR Doc. 2011–22006 Filed 8–30–11; 8:45 am]

BILLING CODE 4910–22–P

DEPARTMENT OF THE INTERIOR

Bureau of Indian Affairs

25 CFR Chapter I

No Child Left Behind School Facilities and Construction Negotiated Rulemaking Committee—Notice of Meeting

AGENCY: Bureau of Indian Affairs, Interior.

ACTION: Notice of meeting.

SUMMARY: In accordance with the Federal Advisory Committee Act, the Bureau of Indian Affairs is announcing that the No Child Left Behind School Facilities and Construction Negotiated Rulemaking Committee will hold its seventh and final meeting in Washington, DC. The purpose of the meeting is to finalize the language and appearance of a final report to Congress and the Secretary as required under the No Child Left Behind Act of 2001.

DATES: The Committee's seventh meeting will begin at 8 a.m. on September 19, 2011, and end at 12:30 p.m. on September 22, 2011.

ADDRESSES: The meeting will be held at the Residence Inn Capitol Marriott, 333 E Street, SW., Washington, DC 20024.

FOR FURTHER INFORMATION CONTACT: The Designated Federal Official, Michele F. Singer, Director, Office of Regulatory Affairs and Collaborative Action, Office of the Assistant Secretary—Indian Affairs, 1001 Indian School Road, NW., Suite 312, Albuquerque, NM 87104; telephone (505) 563–3805; fax (505) 563–3811.

SUPPLEMENTARY INFORMATION: The No Child Left Behind School Facilities and Construction Negotiated Rulemaking Committee was established to prepare and submit to the Secretary a catalog of the conditions at Bureau-funded schools, and to prepare reports covering: The school replacement and new construction needs at Bureau-funded school facilities; a formula for the equitable distribution of funds to address those needs; a list of major and minor renovation needs at those facilities; and a formula for equitable distribution of funds to address those needs. The reports are to be submitted to Congress and to the Secretary. The Committee also expects to draft

proposed regulations covering construction standards for heating, lighting, and cooling in home-living (dormitory) situations.

The following items will be on the agenda:

- Review all suggestions and feedback from five tribal consultation sessions and comment period;
- Discuss and reach consensus on all final recommendations in the reports;
- Finalize language and appearance of final report;
- Discuss implementation proposals for all committee recommendations;
- Meet with and share recommendations with Department of the Interior, Bureau of Indian Affairs, Bureau of Indian Education, and Congressional Officials; and
- Public comments.

Written comments may be sent to the Designated Federal Official listed in the **FOR FURTHER INFORMATION CONTACT** section above. All meetings are open to the public; however, transportation, lodging, and meals are the responsibility of the participating public.

Dated: August 24, 2011.

Donald E. Laverdure,

Principal Deputy Assistant Secretary—Indian Affairs.

[FR Doc. 2011–22302 Filed 8–30–11; 8:45 am]

BILLING CODE 4310–W7–P

DEPARTMENT OF LABOR

Mine Safety and Health Administration

30 CFR Part 75

RIN 1219–AB65

Proximity Detection Systems for Continuous Mining Machines in Underground Coal Mines

AGENCY: Mine Safety and Health Administration, Labor.

ACTION: Proposed rule; notice of public hearings.

SUMMARY: The Mine Safety and Health Administration (MSHA) is proposing to require underground coal mine operators to equip continuous mining machines (except full-face continuous mining machines) with proximity detection systems. Miners working near continuous mining machines face pinning, crushing, and striking hazards that have resulted, and continue to result, in accidents involving life threatening injuries and death. The proposal would strengthen the protections for miners by reducing the potential for pinning, crushing, or striking accidents in underground coal mines.

DATES: *Comment date:* All comments must be received or postmarked by midnight Eastern Standard Time on November 14, 2011.

Compliance dates: See proposed compliance dates under the **SUPPLEMENTARY INFORMATION** section.

Hearing dates: Hearings will be held on October 18, 2011, October 20, 2011, and October 25, 2011, at the locations listed in the **SUPPLEMENTARY INFORMATION** section of this document.

ADDRESSES: Comments, requests to speak, and informational materials for the rulemaking record may be sent to MSHA by any of the following methods. Clearly identify all submissions in the subject line of the message with ''RIN 1219–AB65''.

- *Federal E-Rulemaking Portal: http://www.regulations.gov.* Follow the on-line instructions for submitting comments.
- *Facsimile:* 202–693–9441.
- *Mail or Hand Delivery:* MSHA, Office of Standards, Regulations, and Variances, 1100 Wilson Blvd., Room 2350, Arlington, VA 22209–3939. For hand delivery, sign in at the receptionist's desk on the 21st floor.

Information Collection Requirements

Comments concerning the information collection requirements of this proposed rule must be clearly identified with ''RIN 1219–AB65'' and sent to both the Office of Management and Budget (OMB) and MSHA. Comments to OMB may be sent by mail addressed to the Office of Information and Regulatory Affairs, Office of Management and Budget, New Executive Office Building, 725 17th Street, NW., Washington, DC 20503, Attn: Desk Officer for MSHA. Comments to MSHA may be transmitted by any of the methods listed above in this section.

FOR FURTHER INFORMATION CONTACT: Roslyn B. Fontaine, Acting Director, Office of Standards, Regulations, and Variances, MSHA, at *fontaine.roslyn@dol.gov* (e-mail), 202–693–9440 (voice), or 202–693–9441 (facsimile).

SUPPLEMENTARY INFORMATION:

I. Introduction
  A. Availability of Information
  B. Public Hearings
  C. Information Collection Supporting Statement
  D. Proposed Compliance Dates
II. Discussion of Proposed Rule
  A. Background
  B. Section-by-Section Analysis
III. Preliminary Regulatory Economic Analysis
  A. Executive Orders (E.O.) 12866 and 13563
  B. Population at Risk
  C. Benefits
  D. Compliance Costs
  E. Net Benefits
IV. Feasibility
  A. Technological Feasibility
  B. Economic Feasibility
V. Regulatory Flexibility Act and Small Business Regulatory Enforcement Fairness Act
  A. Definition of a Small Mine
  B. Factual Basis for Certification
VI. Paperwork Reduction Act of 1995
  A. Summary
  B. Procedural Details
VII. Other Regulatory Considerations
  A. The Unfunded Mandates Reform Act of 1995
  B. Executive Order 13132: Federalism
  C. The Treasury and General Government Appropriations Act of 1999: Assessment of Federal Regulations and Policies on Families
  D. Executive Order 12630: Government Actions and Interference With Constitutionally Protected Property Rights
  E. Executive Order 12988: Civil Justice Reform
  F. Executive Order 13045: Protection of Children From Environmental Health Risks and Safety Risks
  G. Executive Order 13175: Consultation and Coordination With Indian Tribal Governments
  H. Executive Order 13211: Actions Concerning Regulations That Significantly Affect Energy Supply, Distribution, or Use
VIII. References

I. Introduction

A. Availability of Information

Public Comments: MSHA posts all comments without change, including any personal information provided. Access comments electronically on *http://www.regulations.gov* and on *http://www.msha.gov/currentcomments.asp.* Review comments in person at the Office of Standards, Regulations, and Variances, 1100 Wilson Boulevard, Room 2350, Arlington, Virginia. Sign in at the receptionist's desk on the 21st floor.

E-mail notification: MSHA maintains a list that enables subscribers to receive e-mail notification when the Agency publishes rulemaking documents in the **Federal Register.** To subscribe, go to *http://www.msha.gov/subscriptions/subscribe.aspx.*

B. Public Hearings

MSHA will hold three public hearings on the proposed rule to provide the public with an opportunity to present their views on this rulemaking. The public hearings will begin at 9 a.m. MSHA is holding the hearings on the following dates at the locations indicated:

Date	Location	Contact No.
October 18, 2011	Embassy Suites, Denver, Downtown/Convention Center, 1420 Stout Street, Denver, Colorado 80202.	303–592–1000.
October 20, 2011	Embassy Suites, Charleston, 300 Court St., Charleston, WV 25301	304–347–8700.
October 25, 2011	Courtyard Washington, Meadow Lands, 1800 Tanger Boulevard, Washington, Pennsylvania 15301.	724–222–5620.

The hearings will begin with an opening statement from MSHA, followed by an opportunity for members of the public to make oral presentations. Persons do not have to make a written request to speak; however, persons and organizations wishing to speak are encouraged to notify MSHA in advance for scheduling purposes. MSHA requests that parties making presentations at the hearings submit them no later than five days prior to the hearing. Presentations and accompanying documentation will be included in the rulemaking record.

The hearings will be conducted in an informal manner. Formal rules of evidence and cross examination will not apply. The hearing panel may ask questions of speakers and speakers may ask questions of the hearing panel. Verbatim transcripts of the proceedings will be prepared and made a part of the rulemaking record. Copies of the transcripts will be available to the public. The transcripts may be viewed at *http://www.regulations.gov* or *http://www.msha.gov/tscripts.htm*.

C. Information Collection Supporting Statement

MSHA posts Information Collection Supporting Statements on *http://www.regulations.gov* and on MSHA's Web site at *http://www.msha.gov/regspwork.htm*. A copy of the information collection package is also available from the Department of Labor by request to Michel Smyth at *smyth.michel@dol.gov* (e-mail) or 202 693 4129 (voice); or from MSHA by request to Roslyn Fontaine at *fontaine.roslyn@dol.gov* (e mail) or 202–693–9440 (voice) or 202–693–9441 (facsimile).

D. Proposed Compliance Dates

Under the proposed rule, each underground coal mine operator would be required to install proximity detection systems on continuous mining machines based on the date of manufacture of the machine according to the following schedule. MSHA considers the date of manufacture as the date identified on the machine or otherwise provided by the manufacturer.

1. By [Date 3 months after the publication date of the final rule] for continuous mining machines (except full-face continuous mining machines) manufactured after [date of publication of the final rule].

2. By February 28, 2013 for continuous mining machines (except full-face continuous mining machines) manufactured on or before August 31, 2011.

TABLE 1—PROPOSED RULE COMPLIANCE DATES

Compliance date	Machine type	Date of manufacture
3 months after the publication date of final rule.	Continuous Mining Machines (except full-face continuous mining machines).	After the publication date of final rule.
18 months after the publication date of final rule.	Continuous Mining Machines (except full-face continuous mining machines).	On or before the publication date of final rule.

II. Discussion of Proposed Rule

A. Background

This proposed rule is issued under section 101 of the Federal Mine Safety and Health Act of 1977 (Mine Act), as amended. The proposed rule would require mine operators to install proximity detection systems on continuous mining machines in underground coal mines according to a phased-in schedule for newly manufactured and existing equipment. It would also establish performance and maintenance requirements for proximity detection systems and require training for installation and maintenance. The proposed requirements would strengthen protections for miners by reducing the potential for pinning, crushing, or striking fatalities and injuries to miners who work near continuous mining machines.

Miners are exposed to hazards that are a result of working near continuous mining machines in the confined space of an underground coal mine. Working conditions in underground mines that contribute to these hazards may include limited visibility, limited space around mobile machines, and uneven and slippery ground conditions which may contain debris.

MSHA has conducted a review of fatal and nonfatal pinning, crushing, and striking accidents in underground coal mines involving continuous mining machines to identify those that could have been prevented by using a proximity detection system. Of the deaths in underground coal mines from 1984 through 2010, MSHA estimates that 30 could have been prevented by installing proximity detection systems on continuous mining machines. During this same time period, of all the injuries due to pinning, crushing, and striking accidents in underground coal mines, approximately 220 could have been prevented with proximity detection systems installed on continuous mining machines.

MSHA's analysis of fatalities and nonfatal accidents during the 1984 through 2010 period indicates that many of these accidents occurred in confined areas in underground coal mines where a proximity detection system could have warned the miners and stopped the machines before the accident. Proximity detection systems are needed because training and outreach initiatives alone have not prevented these accidents and the systems can provide necessary protections for miners. In 2004, MSHA introduced a special initiative to inform underground coal mine operators and miners about the dangers of pinning, crushing, or striking hazards. MSHA's outreach efforts included webcasts, special alerts, videos, bulletins, and inspector-to-miner instruction. Despite these efforts, pinning, crushing, and striking accidents still occur. There were two fatalities and four injuries in

2010 where a continuous mining machine pinned, crushed, or struck a miner. In 2011, a continuous mining machine operator was fatally injured. The preliminary report of the accident states the operator was pinned by the machine.

Proximity detection is a technology that uses electronic sensors to detect motion or the location of one object relative to another. Proximity detection systems can provide a warning and stop mobile machines before a pinning, crushing, or striking accident occurs that could result in injury or death to miners.

In 1998, MSHA evaluated accidents involving remote controlled mining machines and determined that proximity detection systems have the potential to prevent accidents that occur when the machine operator or another miner gets too close to the machine (Dransite, 1998). MSHA noted that if changes in work practices or machine design do not prevent miners from being placed in unsafe locations, the Agency should consider a requirement for proximity detection by means of signal detectors with automatic machine shutdown. No MSHA-approved proximity detection systems were commercially available for underground mines at that time.

In 2002, following a series of fatal pinning, crushing, and striking accidents, MSHA decided to work with the coal mining industry to develop a proximity detection system. MSHA evaluated: (1) The Bureau of Mines' Hazardous Area Signaling and Ranging Device (HASARD) system; (2) the Nautilus, International ''Buddy System''; and (3) the International Mining Technologies ''Mine Mate'' system. MSHA selected the Nautilus, International ''Buddy System'' for testing because it could be adapted to remote controlled continuous mining machines in the least amount of time. MSHA first tested the system in July 2003. MSHA, a mine operator, a machine manufacturer, and Nautilus, International developed performance criteria for field testing the system (MSHA Proximity Protection System Specification, October 4, 2004). MSHA evaluated the system for permissibility under 30 CFR 18.82 and issued an experimental permit on May 30, 2003. After several revisions, the Agency field tested the system in March 2006 and determined that it met the established performance criteria. While MSHA was testing the Nautilus system, another manufacturer developed a similar system, the Geosteering Tramguard™ System, which MSHA tested in June 2005 under an experimental permit on a remote controlled continuous mining machine. In November 2005, MSHA field tested the Geosteering Tramguard™ System in accordance with MSHA established criteria and it performed successfully.

MSHA approved the Nautilus, International ''Buddy System'' and the Geosteering Tramguard™ System in 2006 and a third system, the Matrix Design Group M3–1000 Proximity Monitoring System, in 2009, under existing regulations for permissibility in 30 CFR part 18. These approvals are intended to ensure that the systems will not introduce an ignition hazard when operated in potentially explosive atmospheres. MSHA's approval regulations under 30 CFR part 18 do not address how systems will perform in reducing pinning, crushing, or striking hazards.

The three MSHA-approved proximity detection systems operate using electromagnetic technology. The Nautilus, International ''Buddy System'' and the Strata Mining Products HazardAvert™ System (formerly the Geosteering Tramguard™ System) require a miner to wear a component that measures the strength of an electromagnetic field generated by antennas strategically located on the machine. A microprocessor onboard the machine is interconnected with the machine control circuitry and communicates with the miner-wearable component. The microprocessor sends a signal to activate a warning or stop machine movement when the miner wearing the component is within a prescribed distance of the machine.

The Matrix Design Group (now partnered with Joy Mining Machinery to commercialize the system for continuous mining machines) M3–1000 Proximity Monitoring System operates in a similar manner but generates the magnetic field around the miner-wearable component. In this case, the machine is equipped with sensors that detect the magnetic field around the miner. The sensors are connected to a microprocessor which interprets the signals and communicates warning and stop commands to the machine. MSHA did not participate in the development of Matrix Design Group's proximity detection system for remote controlled continuous mining machines because Matrix did not request assistance.

At least 35 remote controlled continuous mining machines in underground coal mines in the United States are equipped with proximity detection systems. MSHA monitors the installation and development of these systems to maintain up-to-date information on the number of proximity detection systems being used and the capabilities of the various systems.

MSHA also evaluated the use of proximity detection systems in underground mines in the Republic of South Africa (South Africa). MSHA staff traveled to South Africa in April 2010 to observe the performance of several proximity detection systems, including the Strata Safety Products HazardAvert™ System that was developed in the United States. One of the mines visited began testing the Strata system in 2008 and, at the time of the MSHA visit, had equipped all mobile machines on three complete underground coal mine sections with the system. The mine is using the proximity detection system on remote controlled continuous mining machines, shuttle cars, roof bolting machines, feeder breakers, and load-haul-dump machines (scoops). In addition to the Strata system, MSHA also observed the Booyco Collision Warning System (CWS) being used on continuous mining machines. The mining operations, conditions, and machines in underground coal mines in South Africa are similar to those in underground coal mines in the United States. The South African mines that MSHA visited are room and pillar operations with approximately 10-foot high and 22-foot wide entries.

The Strata Safety Products HazardAvert™ System used in South Africa is similar to the HazardAvert™ System used in underground coal mines in the United States. The HazardAvert™ System for continuous mining machines provides two zones. When a miner is within the outer zone, an audible and visual signal is activated. When a miner is within the inner zone, machine movement is stopped. The miner-wearable component is incorporated into the cap lamp battery and includes a warning buzzer and flashing LED that clips to the hardhat.

The Booyco system, observed in South Africa, provides warning signals to miners and machine operators. It does not stop machine movement. There are two zones associated with the Booyco system. When a miner enters the outer zone, an audible and visual warning signal is provided to the miner working near the machine. When a miner enters the inner zone, an audible and visual warning signal is provided to both the miner and the machine operator. This system could be modified to stop machine movement. The Booyco system is not MSHA-approved and is not being used in the United States.

In 2004, MSHA initiated a safety campaign to raise the mining industry's awareness of pinning, crushing, and

striking hazards associated with remote controlled continuous mining machines. This safety campaign was targeted to the underground coal mining industry and included webcasts, special alerts, videos, bulletins, and inspector-to-miner instruction. There were no fatalities associated with continuous mining machines between 2005 and 2007 indicating the safety campaign may have had a positive impact on fatal accidents. However, pinning, crushing, and striking accidents continue to occur. Two fatalities in 2010 related to pinning, crushing, or striking accidents involving a continuous mining machine could have been prevented by using proximity detection systems.

The Agency published a Request for Information (RFI) on proximity detection systems in the **Federal Register** on February 1, 2010 (75 FR 5009). The comment period closed on April 2, 2010. MSHA received comments from: Mining associations; mining companies; manufacturers; and state, Federal, and an international government entity.

Comments addressed specific questions regarding function, application, training, costs, and benefits of proximity detection systems to reduce the risk of accidents. Some commenters stated that proximity detection systems are beneficial and can prevent pinning, crushing, and striking accidents. Commenters stated that conditions in the mining environment, including blocked visibility and limited space, or simply the lack of sight due to limited light, can cause an accident and that the only way to address these hazards is to equip mining vehicles with a proximity detection system. A commenter stated that, when it comes to safety, engineering barriers are required when the behavior of everyone, whether due to the lack of training or taking shortcuts, cannot be relied on. Several commenters stated that the technology needs further development and testing.

RFI comments related to specific provisions of the proposed rule are addressed in the section-by-section analysis.

B. Section-by-Section Analysis

The proposed rule would require underground coal mine operators to equip continuous mining machines (except full-face continuous mining machines) with proximity detection systems over an 18-month phase-in period.

1. Section 75.1732(a) Machines Covered

Proposed § 75.1732(a) would require operators to equip continuous mining machines (except full-face continuous mining machines) with a proximity detection system in accordance with the following dates: 3 months after August 31, 2011 for machines manufactured after August 31, 2011; and 18 months after August 31, 2011 for machines manufactured on or before August 31, 2011.

A commenter, in response to the RFI, stated that MSHA's approval process does not include an evaluation of the system's functional readiness to perform in the underground mine environment. This commenter indicated that only a handful of mines have operational experience with approved systems and that a thorough examination of the operational readiness of these systems must be undertaken to address safety issues before they are required. Several other commenters stated that proximity detection systems have not proven reliable and that more testing is needed. One of these commenters stated that establishing a set distance from a miner at which a machine would shut down needs further analysis due to its potential to force machine operators out of previously safe areas into potentially less safe areas in order to avoid shutdown.

In response to the RFI, a proximity detection system manufacturer stated that it has experience with proximity detection systems on remote controlled continuous mining machines in five coal mines in the United States and on machines in mines within South Africa and Australia. A representative of a South African mining company that uses this system on continuous mining machines stated in its comments that the system is very reliable. This South African mining company reported that it did not have a single reliability problem over a period of 18 months. A second proximity detection system manufacturer stated that its proximity detection system is installed on many types of underground mobile machines in Canada and Australia and that there has not been a serious injury or fatality reported on any machine using its proximity detection system. A coal mine operator and a third manufacturer commented jointly and stated that development of a proximity detection system for remote controlled continuous mining machines is still in the early stages and it is premature to consider rulemaking for other types of mobile underground equipment. However, this commenter also stated that applying proximity detection systems to all mobile machines should be a ''long-term goal'' that could provide safety benefits and that the coal mine operator plans to voluntarily equip its entire fleet of remote controlled continuous mining machines with proximity detection systems.

The proposed rule would require underground coal mine operators to equip continuous mining machines (except full-face continuous mining machines) with proximity detection systems. MSHA has determined that continuous mining machines expose miners to dangers when working in underground coal mines and that these machines have resulted in injuries and fatalities to miners. Of the 70 fatalities resulting from pinning, crushing, and striking accidents from 1984 through 2010 in underground coal mines, 30 were associated with a continuous mining machine. Use of proximity detection systems could have prevented these accidents and the fatalities by stopping continuous mining machine movement before miners were pinned, crushed, or struck by the machine.

Proposed § 75.1732(a) would not require underground coal mine operators to equip full-face continuous mining machines with a proximity detection system. A full-face continuous mining machine includes integral roof bolting equipment and develops the full width of the mine entry in a single cut, generally without having to change its location. Full-face continuous mining machines can be operated remotely or by an operator positioned in a compartment on the machine (on-board operator). Continuous mining machines that are not full-face machines are place-changing continuous mining machines because they must change places to cut the full width of an entry.

A commenter on the RFI stated that current proximity detection system designs should only apply to remote controlled continuous mining machines that are considered place-changing machines and not full-face continuous mining machines. This same commenter indicated that a proximity detection system for full-face continuous mining machines would require a significantly more complicated design to accommodate the miners who operate the roof and rib bolting equipment. Another commenter on the RFI stated that an MSHA standard could address all continuous mining machines except those with integral/satellite bolters (full-face continuous mining machines.)

After a review of comments, accident data, and Agency experience, MSHA is not proposing that proximity detection systems be required for full-face continuous mining machines since they present fewer hazards to miners. Full-face continuous mining machines involve less frequent place-changing and repositioning, resulting in fewer pinning, crushing, or striking hazards to

miners. MSHA is not aware of any fatal or nonfatal accidents involving either remote controlled or on-board operated full-face continuous mining machines that a proximity detection system could have prevented. Also, MSHA does not have experience with proximity detection systems on remote controlled or on-board operated full-face continuous mining machines.

Except for full-face continuous mining machines, the proposed rule would require proximity detection systems to be installed on both on-board operated and remote controlled continuous mining machines. Remote controlled continuous mining machines account for the greater number of fatalities. Operators not in an operator's compartment and miners working near the continuous mining machine are at risk from pinning, crushing, and striking hazards. More accidents are associated with remote controlled continuous mining machines because approximately 97% of continuous mining machines are remote controlled and because the machine operator is not protected from pinning, crushing, and striking accidents by an on-board operator's compartment. However, on-board operated continuous mining machines also present a pinning, crushing, and striking hazard to miners other than the operator and would be required to be equipped with proximity detection systems. On-board operated continuous mining machines were involved in 2 of the 30 fatalities that could have been prevented by use of a proximity detection system.

MSHA solicits comments on how full-face continuous mining machines should be addressed. Comments should be specific and include alternatives, rationale for suggested alternatives, safety benefits to miners, technological and economic feasibility considerations, and supporting data.

The proposed rule would phase in the use of proximity detection systems on newly manufactured continuous mining machines and continuous mining machines in service on the publication date of the final rule over an 18-month period. The phase-in period is based on the availability of systems, the time necessary to process approvals for proximity detection systems, projected time needed to install systems, and MSHA and industry experience.

The Agency recognizes that it will take time for proximity detection system manufacturers, machine manufacturers, and mine operators to obtain approval under 30 CFR part 18. It will also take time for manufacturers and mine operators to produce and install proximity detection systems.

Several commenters on the RFI recommended that MSHA consider a phase-in approach with separate compliance dates addressing new equipment, rebuilt equipment, and equipment in service in underground mines. One commenter encouraged MSHA to proceed cautiously and to provide the time required to assure the development of reliable and effective systems. Another commenter stated that most machines will be retrofitted with proximity detection systems in a shop or during rebuild. A proximity detection system manufacturer stated that a proximity detection system can be installed and calibrated on a remote controlled continuous mining machine in one midnight shift.

MSHA has determined that three months would be an appropriate amount of time for operators to install proximity detection systems on continuous mining machines (except full-face continuous mining machines) that are manufactured after [the publication date of the final rule].

In selecting this three-month time frame, MSHA took into consideration the time period for the rulemaking, availability of three existing MSHA-approved proximity detection systems for continuous mining machines, the estimated number of continuous mining machines that would be replaced by newly manufactured machines during this period, and manufacturers' capacity to produce and install systems for these machines. The three-month time period allows mine operators some time to inform and train their workforce on proximity detection systems.

The proposed rule would provide an additional 15 months for operators to retrofit continuous mining machines, except full-face continuous mining machines, that are manufactured on or before the publication date of the final rule with proximity detection systems. MSHA estimates that there are 1,150 place-changing continuous mining machines in underground coal mines. These machines would need to be replaced by a new machine with a proximity detection system or retrofitted with a proximity detection system. MSHA has determined that 18 months would provide both operators and manufacturers with enough time to retrofit place-changing continuous mining machines manufactured on or before the publication date of the final rule with proximity detection systems. MSHA recognizes that these machines, which are in service when the final rule goes into effect, will need to be taken out of service for a period of time. The additional 15 months would allow mine operators to schedule the installation during planned rebuilds or scheduled maintenance and would allow mine operators some time to inform and train their workforce on proximity detection systems.

Continuous mining machines addressed in this proposal must be approved by MSHA as permissible equipment under existing regulations in 30 CFR part 18 before they can be used in underground coal mines. The machine manufacturer or the mine operator can obtain MSHA approval. Machine manufacturers with MSHA approvals may submit an application to MSHA's Approval and Certification Center (A&CC) to add a proximity detection system to their approval. MSHA projects that machine manufacturers would submit applications to allow all of their new and many of their older models to be equipped with proximity detection systems. In instances where the equipment manufacturer is no longer in business or chooses not to seek approval, the mine operator has the option to apply for a field modification or a district field change to equip the machines with a proximity detection system. A mine operator can either request a field modification through the A&CC or a field change through MSHA's District Offices.

MSHA permissibility approvals include both evaluation of the proximity detection systems and the addition of the systems to MSHA-approved continuous mining machines. MSHA offers an optional Proximity Detection Acceptance (PDA) program which allows a proximity detection system manufacturer to obtain MSHA acceptance for a proximity detection system (PDA Acceptance Number). This acceptance states that the proximity detection system has been evaluated under 30 CFR part 18 and is suitable for incorporation on an MSHA-approved machine. It permits the manufacturer or owner of a machine to add the proximity detection system to a machine by requesting MSHA to add the acceptance number to the machine approval. However, a proximity detection system manufacturer is not required to obtain a proximity detection system acceptance. MSHA could also approve a machine modification submitted by a continuous mining machine manufacturer or a field modification submitted by a mine operator that includes a complete evaluation of a proximity detection system that has not been evaluated under a PDA acceptance.

Based on conversations with manufacturers of the three MSHA-approved proximity detection systems,

MSHA estimates that together they can produce approximately 350 units per month. MSHA estimates that the manufacturers can increase production to about 400 to 600 units per month, if necessary, within approximately three to six months. MSHA determined that it would take approximately eight months to provide a sufficient number of units to equip approximately 1,150 place-changing continuous mining machines with proximity detection systems. However, the two phase-in periods are based on the time needed for: Providing sufficient numbers of systems; installing the systems on newly manufactured and existing machines; obtaining necessary MSHA approvals and test systems; and informing and training the workforce.

MSHA solicits comments on the proposed compliance dates. Comments should be specific and include alternatives, rationale for suggested alternatives, safety benefits to miners, technological and economic feasibility considerations, and supporting data.

As the proximity detection systems are phased in, mine operators would be required to provide miners with new task training under existing part 48. MSHA intends that mine operators would address safety issues that might arise during the phase-in period, such as some machines being equipped with proximity detection systems while others are not, through existing new task training requirements. In addition, MSHA recently introduced a new initiative titled ''Safety Practices Around Shuttle Cars and Scoops in Underground Coal Mines.'' This outreach program includes training programs and best practices to encourage mine operators to train underground coal miners to exercise caution when working around mobile machines. Information regarding this initiative is available at: *http://www.msha.gov/focuson/watchout/watchout.asp.*

In response to the RFI, some commenters stated that miners will need task training when machines are equipped with a proximity detection system. Miners working near proximity detection systems would probably need to engage in different and unfamiliar machine operating procedures resulting from new work positions, machine movements, and new visual or auditory signals. Existing § 48.7(a) requires that miners assigned to new work tasks as mobile equipment operators shall not perform new work tasks until training has been completed. In addition, § 48.7(c) requires miners assigned a new task not covered in § 48.7(a) be instructed in the safety and health aspects and safe work procedures of the task prior to performing such task.

Miners must receive new task and equipment training on the proper functioning of a proximity detection system before operating or working near a machine equipped with a proximity detection system. New task training (which is separate from new miner training under existing § 48.5 and annual refresher training under existing § 48.8) must occur before miners operate machines equipped with a proximity detection system. New task training helps assure that miners have the necessary skills to perform new tasks prior to assuming responsibility for the tasks. Mine operators should assure that this training include hands-on training during supervised non-production activities. The hands-on training allows miners to experience how the systems work and to locate the appropriate work positions around machines. Based on Agency experience, the hands-on training is most effective when provided in miners' work locations. As required by existing § 48.7(a)(3) for new or modified machines and equipment, equipment and machine operators shall be instructed in safe operating procedures applicable to new or modified machines or equipment to be installed or put into operation in the mine, which require new or different operating procedures.

MSHA requests comments on the training of miners who use proximity detection systems or work near machines equipped with these systems. Comments should address the type of training, frequency of training, content of training, and which miners should be trained. Comments should be specific and include alternatives, rationale for suggested alternatives, safety benefits to miners, technological and economic feasibility considerations, and supporting data.

2. Section 75.1732(b) Requirements for Proximity Detection Systems

Proposed § 75.1732(b) would address requirements for proximity detection systems.

Proposed paragraph (b)(1) would require that a proximity detection system cause a machine to stop no closer than three feet from a miner. This proposed requirement would prevent pinning, crushing, and striking accidents.

In the RFI, MSHA asked for comments on the size and shape of the area around machines that a proximity detection system monitors and how systems can be programmed and installed to provide different zones of protection depending on machine function. Some commenters stated that an effective proximity detection system should cause the machine to stop before a miner enters the hazardous area around the machine and a warning should be provided before the proximity detection system causes the machine to stop.

Some commenters stated that zone size should be determined using a risk assessment considering the speed at which the proximity detection system can alert the operator, the reaction time of the operator, and the number of people in the working area. Another commenter stated that work practices vary among mines so that one specified zone may not work for all mines. Another commenter stated that fixed zone sizes are used in the commenter's operations because using different zones of protection based on equipment function could confuse miners and zone sizes should be kept small to avoid nuisance alarms but not so small so as to allow a dangerous condition. One commenter stated that establishing a set distance from a miner at which a machine would shut down needs further analysis due to its potential to force machine operators out of previously safe areas into potentially less safe areas in order to avoid shutdown.

NIOSH has performed research on proximity detection systems. NIOSH has an Internet Web Page (*http://www.cdc.gov/niosh/mining/topics/topicpage58.htm*) that provides publications on proximity detection systems and technology. The publications address measurement and analysis issues related to the work positions of continuous mining machine operators, needs and practices of machine operators while controlling the machine, and the reasons for needing particular operational cues, machine-related injuries in and priorities for safety research, and operating speed assessments of underground mining equipment. Several other publications on this Web page discuss the application of proximity detection systems as engineering controls to prevent mining accidents.

In their comments on the RFI, NIOSH stated that the goal of a proximity detection system should be to prevent machine actions or situations that injure workers while not placing restrictions on how the workers do their jobs. NIOSH also stated that the total time required for performing proximity detection system functions, plus a safety factor, should be used to define the size of detection zones around machines. NIOSH stated that the total time required includes these components: (1) Detection of a potential victim; (2)

decision processing to determine if a collision-avoidance function is needed; (3) an initiation of the collision-avoidance function; and (4) implementation of the collision-avoidance function. NIOSH stated that any rulemaking should be performance-based.

MSHA's experience with testing and observing proximity detection systems indicates that causing a machine to stop no closer than three feet from a miner would provide an appropriate distance, or margin of safety, between a machine and a miner to prevent pinning, crushing, or striking hazards. In addition, MSHA consulted relevant published studies. A team of NIOSH researchers evaluated operator interactions with continuous mining machines and roof bolting machines. The researchers concluded that by maintaining a minimum 910 mm (3 ft) distance from the machine, continuous mining machine operators can substantially reduce their risk of being struck (Bartels, 2009). MSHA believes that this distance includes a margin of safety and is necessary to account for varying mining conditions, differences in the operating condition of machines, and variations in the positioning of miner-wearable components of the proximity detection system in relation to machines.

The proposed three-foot stopping requirement is consistent with MSHA's observations of operating proximity detection systems in an underground coal mine in South Africa. During MSHA's visit, staff observed that the proximity detection systems installed on continuous mining machines caused the machine to stop before getting closer than three feet from a miner. Prior to the introduction of proximity detection systems at their mines, the company's policy was that miners must maintain a minimum distance of three feet from all operating mobile machines.

Each of the three proximity detection systems approved for underground coal mines in the United States has a miner-wearable component. Because the location of the miner-wearable component is the point at which the systems measure distance, a part of the miner's body may be further from or closer to the machine when the miner-wearable component is exactly three feet from a machine. For these systems, MSHA intends that the three-foot distance be measured from the surface of the machine closest to the miner-wearable component. MSHA intends that the machine remain stopped (or will not move) while any miner is three feet or closer to the nearest surface of the machine.

One method a mine operator could use to determine that a proximity detection system will cause the machine to stop no closer than three feet from a miner is to suspend a miner-wearable component from the mine roof, move the machine towards the suspended component, and after the machine stops movement, measure the distance between the machine and the suspended component to check whether the three-foot distance has been met. MSHA recognizes that many factors would be considered when determining whether the proximity detection system will cause the machine to stop no closer than three feet from a miner. These factors, among others, include machine speed, slope of entries, and wet roadways.

MSHA considered proposing a performance-oriented requirement that would not specify a specific distance a machine must stop from a miner, *e.g.,* ''before contacting a miner.'' MSHA also considered proposing other specific stopping distances, *e.g.,* six feet from a miner but concluded that longer stopping distances may increase the frequency of machine shutdowns while offering little additional benefit to miners. MSHA solicits comments on the proposed three-foot stopping distance requirement and on other alternatives to this proposed provision. Comments should be specific and address how the requirement impacts miner safety. Comments should include safety benefits to miners, technological and economic feasibility considerations, and supporting data.

MSHA recognizes that there are different points that could be used to measure the proposed three-foot distance from a machine to a miner when the proximity detection system requires the miner to wear a component and solicits comments on the point at which the three-foot stopping distance should be measured. Comments should be specific and include suggested alternatives, rationale for suggested alternatives, safety benefits to miners, technological and economic feasibility considerations, and supporting data.

The proposed rule would require that all machine movement be stopped when a miner gets closer than three feet except for the continuous mining machine operator when cutting coal or rock. It is important to note that the proposed exception would only apply when the machine operator is actually cutting coal or rock. Some current proximity detection systems on continuous mining machines are installed to stop machine tram movement and the conveyor swing function when the system is activated while permitting other machine movement, such as rotation of the cutter head and movement of the gathering arms. MSHA solicits comments on whether all movement should be stopped. Comments should be specific and include alternatives, rationale for suggested alternatives, safety benefits to miners, technological and economic feasibility considerations, and supporting data.

The three MSHA-approved proximity detection systems have a miner-wearable component. These systems cannot detect a miner who is not wearing the component. The cost estimates for the miner-wearable components included in the Preliminary Regulatory Economic Analysis (PREA) are based on miners on the working section being equipped with these components. MSHA solicits comments on which miners working around continuous mining machines should be required to have a miner-wearable component. Comments should be specific and include alternatives, rationale for suggested alternatives, safety benefits to miners, technological and economic feasibility considerations, and supporting data.

Proposed paragraph (b)(1)(i) would provide an exception for a miner who is in an on-board operator's compartment. Machines with an on-board operator will not function if the proximity detection system prevents machine movement when the operator is within three feet of the machine. One proximity detection system is currently designed to allow a miner to be in an on-board operator's compartment while assuring that miners outside the operator's compartment are protected. Proposed paragraph (b)(1)(i) would allow machines equipped with a proximity detection system to move if a miner occupies the operator's compartment. The proposed rule would require that continuous mining machines be stopped if any miner not in the operator's compartment is closer than three feet.

Commenters generally stated that machines with an on-board operator's compartment should have a proximity detection system that allows machines to function when the operator is in the operator's compartment. One commenter stated that a proximity detection system can include exclusion zones to allow mobile machines to move while a miner is in the exclusion zone but still protect other miners.

Proposed paragraph (b)(1)(ii) would provide an exception for a miner who is remotely operating a continuous mining machine while cutting coal or rock. In this case, the proximity detection system would be required to cause the

machine to stop before contacting the machine operator. The use of the term ''cutting coal or rock'' would not include situations where the cutter head is rotating but not removing coal or rock from the face.

In response to the RFI, one commenter stated that a remote controlled continuous mining machine that is tramming presents different hazards than one that is cutting coal. This commenter stated that the size and shape of the detection zone should be changed based on the function of the machine. Some commenters stated that zone sizes could depend on machine function (cutting or tramming). Several commenters suggested that protection zones should be largest when tramming machines and reduced protection zones are needed for certain mining operations such as cutting. Another commenter stated that the proximity detection system for a remote controlled continuous mining machine should keep all personnel at a safe distance from the periphery of the machine except for the operator who should be allowed to approach the machine at designated locations to perform cutting operations, such that if the operator fails to stay in the designated locations, the machine will immediately stop.

MSHA is not aware of a continuous mining machine fatal accident that occurred while the machine was cutting coal or rock. In all the 30 continuous mining machine fatal accidents from 1984 to 2010 which could have been prevented by proximity detection systems, the continuous mining machine was in the process of being moved (trammed) when the accident occurred. In addition, there are certain mining operations where the continuous mining machine operators get closer than within three feet of the machine in order to properly perform the required tasks (*e.g.,* turning crosscuts). In MSHA's experience, when a continuous mining machine is cutting coal or rock, the machine moves in a slower manner, which reduces the hazard. For these reasons, MSHA proposes to allow a continuous mining machine operator to be closer than three feet from the machine while cutting coal or rock; however, the proximity detection system would be required to stop machine movement before contacting the operator. The proximity detection system would be required to stop machine movement if a miner who is not remotely operating the continuous mining machine gets closer than three feet from the machine while the machine is cutting coal or rock. The proximity detection systems that MHSA observed in South Africa do not allow miners within three feet of a continuous mining machine while cutting coal or rock. However, these mines have larger entry dimensions than underground coal mines in the United States, which provides more room for machine operator positioning.

Proposed paragraph (b)(2) would require the proximity detection system to provide an audible or visual warning signal distinguishable from other signals, when the machine is five feet and closer to a miner.

In the RFI, MSHA asked for information on the most effective protection that proximity detection systems could provide. In response, some commenters stated that a proximity detection system should include a warning prior to causing the machine to stop movement. One commenter stated that proximity detection systems should include a range of escalating alerts depending on the proximity to a hazard.

Most proximity detection systems alert miners who get within a certain distance of a machine, before causing machine movement to stop. This provides an added margin of safety and is consistent with most standard safety practices. The Agency recognizes that the use of a proximity detection system that causes frequent machine stops can result in: frustration to miners; miners ignoring warnings; and can possibly lead to unsafe work practices. MSHA believes that an appropriate warning signal is necessary to optimize miner safety when using a proximity detection system.

Based on MSHA's experience, proximity detection systems in the United States provide an audible or visual warning signal when a miner is five feet and closer to a machine. The systems on continuous mining machines in South Africa provide an audible warning signal when a miner is closer than six feet to a machine. However, entries in the United States are typically narrower than those observed in South Africa, making a five-foot distance more appropriate and minimizing unnecessary warning signals. In MSHA's experience, an audible or visual warning signal provided when the machine is five feet and closer to a miner includes a necessary margin of safety and allows the miner an opportunity to be proactive and move away from the machine to avoid danger.

Consistent with proposed paragraph (b)(1)(i), proposed paragraph (b)(2)(i) would provide an exception to the warning signal for the miner who is in an on-board operator's compartment.

Consistent with proposed paragraph (b)(1)(ii), proposed paragraph (b)(2)(ii) would provide an exception to the warning signal for a miner who is remotely operating a continuous mining machine while cutting coal or rock. A five-foot warning signal would not improve safety in this case because the operator may be closer than five feet to the machine for the duration of the activity of cutting coal or rock. Under the proposed rule, the proximity detection system would be required to provide a warning signal when the machine is closer than five feet from miners who are not remotely operating a continuous mining machine while the machine is cutting coal or rock.

Proposed paragraph (b)(3) would require that a proximity detection system provide a visual signal on the machine that indicates the system is functioning properly.

Commenters in response to the RFI generally stated that a proximity detection system should include system diagnostics and indicate that the system is functioning properly. In its comments on the RFI, NIOSH stated that each proximity detection system should perform self-diagnostics to identify software or hardware problems.

The proposed visual signal would allow miners to readily determine that a proximity detection system is functioning properly. MSHA believes that a visual signal is preferable to provide feedback to the miner because, unlike an audible signal, it could not be obscured by surrounding noise. A light-emitting diode (LED) would be an acceptable visual signal.

Proposed paragraph (b)(4) would require that a proximity detection system prevent movement of the machine if the system is not functioning properly. However, as proposed, a system may allow machine movement so that if the system is not functioning properly, the machine can be moved if an audible or visual warning signal, distinguishable from other signals, is provided during movement. Such movement would be permitted only for purposes of relocating the machine from an unsafe location for repair.

Commenters in response to the RFI had different opinions on whether a proximity detection system should be permitted to override the shutdown feature to allow machine movement in a particular circumstance. One commenter stated that a proximity detection system must provide a continuous self-check capability so that if the system is not functioning properly, the machine cannot be operated; this same commenter stated that only an appointed person should

have the authority to override a proximity detection system. Several commenters stated that a proximity detection system should allow for temporary deactivation, such as an emergency override, in case a system is not functioning properly while a machine is under unsupported roof. Another commenter, however, stated that a proximity detection system should not have an override feature.

Proposed paragraph (b)(4) would allow machine movement so that if the proximity detection system is not functioning properly and is in an unsafe location, the machine can be moved if an audible or visual warning signal, distinguishable from other signals, is provided during movement. The proposed provision would allow a machine to be moved if it is not functioning properly and is in an unsafe location, such as under unsupported roof, to protect miners from hazards that could arise if the proximity detection system is not functioning properly and is in an unsafe location. Overriding the proximity detection system should only occur for the time necessary to move the machine to a safe location—for example, the time needed to move a continuous mining machine from under unsupported roof to an appropriate repair location. This movement would be allowed only to relocate the machine for safety reasons. The proposed provision to allow the machine to be moved would require an audible or visual warning signal, distinguishable from other signals, to caution miners when the machine is being moved from an unsafe location.

Proposed paragraph (b)(5) would require that a proximity detection system be installed to prevent interference with or from other electrical systems.

Some commenters in response to the RFI stated that interference of proximity detection systems with other mine electrical systems is a concern. However, manufacturers of the three approved proximity detection systems all stated that their systems do not have significant interference issues. A commenter stated that electromagnetic interference may prevent these systems from providing complete protection to miners. Several commenters stated that systems must be designed and tested for possible and known sources of interference before a requirement for proximity detection is issued. A commenter expressed concern that a proximity detection system may detonate explosives due to electromagnetic field interference.

Electrical systems, including proximity detection systems, used in the mine can adversely affect the function of other electrical systems. The interference results from electromagnetic interference (EMI). There have been instances of adverse performance of remote controlled systems, atmospheric monitoring systems, and cap lamps when a hand-held radio was operated nearby. Electromagnetic output of approved proximity detection systems is substantially lower than other mine electrical systems such as communication and atmospheric monitoring systems, and therefore, the likelihood of encountering interference issues is less.

The mine operator would be required to evaluate the proximity detection system and other electrical systems in the mine and take adequate steps to prevent adverse interference. Steps could include design considerations such as the addition of filters or providing adequate separation between electrical systems. The mine operator would also be required to take steps to prevent interference with any blasting circuits used in the mine.

Proposed paragraph (b)(6) would require that a proximity detection system be installed and maintained by a person trained in the installation and maintenance of the system. The proximity detection systems use advanced technology that often must be coordinated with machine electronics to ensure the system functions properly. MSHA believes this work should be performed by miners who are properly trained to understand the operation of the system and the proper installation techniques.

A commenter in response to the RFI stated that maintenance personnel and machine operators will need training to assure they understand proximity detection system functionality and any maintenance requirements. This commenter also stated that proper installation of a proximity detection system is critical for reliable performance. Another commenter said that a few hours of classroom instruction and approximately one hour of underground training for machine operators has proven adequate and that maintenance training requires about four hours.

Based on MSHA experience with testing of proximity detection systems, proper functioning of a proximity detection system is directly related to the quality of the installation and maintenance of the systems. Training helps assure that the person performing installation and maintenance of a proximity detection system understands the system well enough to perform tasks such as replacing and adjusting system components, adjusting software, and troubleshooting electrical connections.

Based on MSHA's limited experience with proximity detection systems on continuous mining machines in underground coal mines, MSHA anticipates that operators would assign miners to perform most maintenance activities, but representatives of the manufacturer may perform some maintenance. Also, based on Agency experience, operators would generally arrange for proximity detection system manufacturers to provide appropriate training to miners for installation and maintenance. Miners receiving training from manufacturers' representatives would, in most cases, provide training for other miners who become responsible for installation and maintenance duties at the mine. In MSHA's experience, many mines use the train-the-trainer concept for installation and maintenance activities related to certain mining equipment.

MSHA solicits comments on this proposed provision. Comments should be specific and include alternatives, rationale for suggested alternatives, safety benefits to miners, technological and economic feasibility considerations, and supporting data.

3. Section 75.1732(c) Examination and Checking

Proposed § 75.1732(c) would address examination and checking of proximity detection systems.

Proposed paragraph (c)(1) would require that operators designate a person who must perform a visual check of machine-mounted components of the proximity detection system to verify that components are intact, that the system is functioning properly, and take action to correct defects: (i) At the beginning of each shift when the machine is to be used; (ii) immediately prior to the time the machine is to be operated if not in use at the beginning of a shift; or (iii) within one hour of a shift change if the shift change occurs without an interruption in production.

Several commenters stated that a proximity detection system should be checked at the beginning of each shift to verify it is functioning properly. NIOSH commented that the machine operator should have a set of procedures to assess the system at the start of each shift.

A visual check of machine-mounted components of the proximity detection system to verify that components are intact would help assure that proximity detection systems are functioning properly before machines are operated. Some components of a proximity

detection system may be mounted on the outer surfaces of a machine and could be damaged when the machine contacts a rib or heavy material falls against the machine. An appropriate check would include a visual inspection to identify if machine-mounted components are damaged and observing that the system provides a visual signal and that the system is functioning properly so that action can be taken to correct defects.

The proposed visual check would supplement the proposed system design requirement in proposed paragraph (b)(4) that would require that the proximity detection system prevent movement of the machine if the system is not functioning properly. The system may not be able to detect all types of damage such as detached field generators which could affect proper function. Surface-mounted components can be exposed to harsh conditions such as contact with ribs and other machines. The proposed visual check would help assure that proximity detection system components are oriented correctly and mounted properly on the machine.

In most cases, MSHA anticipates that the person making the on-shift dust control parameter check required under existing § 75.362(a)(2) would also make the proposed visual check of the proximity detection system on the continuous mining machine. The person making the on-shift dust control parameter check inspects the water sprays, bits, and lugs on the continuous mining machine and would likely be the designated person making the proposed visual check of the machine-mounted components of the proximity detection system. MSHA also anticipates that both checks would be performed at the same time.

Proposed paragraph (c)(2) would require that miner-wearable components be checked for proper operation at the beginning of each shift that the component is to be used and that defects would be required to be corrected before the component is used.

Several commenters on the RFI stated that the miner-wearable component should be checked at the beginning of each shift and that minimal training is necessary for miners to learn this task.

The proposed requirement that miner-wearable components be checked for proper operation at the beginning of each shift that the component is to be used would help assure that the miner is protected before getting near a machine. MSHA anticipates that under the proposed rule, a miner would visually check the miner-wearable component to see that it is not damaged and has sufficient power to work for the duration of the shift. MSHA intends that this check would be similar to the check that a miner performs of a cap lamp prior to the beginning of a shift. Mine operators are required to provide new task training, under part 48 of 30 CFR, for miners who would be checking the components. If any defect is found, the proposal would require it to be corrected before using the component. Correcting defects before the component is used is intended to assure the system functions properly and helps prevent miners' exposure to pinning, crushing, and striking hazards.

Proposed paragraph (c)(3) would require that the operator designate a qualified person under existing § 75.153 Electrical work; qualified person, to examine proximity detection systems at least every seven days for the requirements in proposed paragraphs (b)(1)–(b)(5) of this section. Defects in the proximity detection system would be required to be corrected before the machine is returned to service.

Several commenters stated that a trained (qualified maintenance) person should examine the basic functionality of the proximity detection system weekly by checking zone sizes, system communication, and warning signals. A commenter stated that the proximity detection system must be examined at regular maintenance intervals and each time there has been a modification to the machines or working environment. Another commenter stated that the person evaluating a proximity detection system should fully understand what the system is intended to do and how electromagnetic field technology operates. This same commenter stated that a properly designed proximity detection system should not require periodic testing.

Proximity detection systems are comprised of complex electrical components. The requirement under proposed paragraph (c)(3) would help assure that the person examining the proximity detection system at least every seven days has the knowledge and skills to understand the purpose of every component, and the hazards associated with failure of the system. The examination in proposed paragraph (c)(3) would be more comprehensive than the checks under proposed paragraphs (c)(1) and (c)(2) of this section. MSHA anticipates that the proposed examination would occur while the machine is not in service. MSHA anticipates the examination of machines with a proximity detection system would be performed in conjunction with the examination requirements under existing § 75.512 Electric equipment; examination, testing and maintenance. The examination in proposed paragraph (c)(3), like the examination required under existing § 75.512, would assure that the electric equipment has not deteriorated into an unsafe condition and the equipment operates properly. The designated qualified person would examine the proximity detection system for the requirements in proposed paragraphs (b)(1) through (b)(5).

Under the proposal, defects in the proximity detection system would be required to be corrected before the machine is returned to service. Correcting defects before the machine is returned to service assures the system is functioning properly and helps prevent miners' exposures to pinning, crushing, and striking hazards.

MSHA solicits comments on the requirements in proposed paragraph (c) of this section. Comments should be specific and include alternatives, rationale for suggested alternatives, safety benefits to miners, technological and economic feasibility considerations, and supporting data.

4. Section 75.1732(d) Certification and Records

Proposed § 75.1732(d) would address certification and records requirements for proximity detection systems.

Proposed paragraph (d)(1) would require that: (1) The operator make a certification at the completion of the check required under proposed paragraph (c)(1) of this section; (2) a certified person specified under existing § 75.100 certify by initials, date, and time that the check was conducted; and (3) defects found as a result of the check in (c)(1) of this section, including corrective actions and date of corrective action, be recorded. Making records of defects and corrective actions provides a history of the defects documented at the mine to alert miners, representatives of miners, mine management and MSHA of recurring problems. The certification in proposed paragraph (c)(1) would assure compliance and miners on the section could confirm that the required check was made. In most cases, MSHA anticipates that the person making the certification required under existing § 75.362(g)(2) would also make this certification. MSHA also anticipates that the certifications would be performed at the same time.

Consistent with proposed paragraph (d)(1), proposed paragraph (d)(2) would require that defects found as a result of the check in (c)(2) of this section, including corrective actions and date of corrective action, be recorded. A certification of the check for proper operation of miner-wearable

components that would be required under proposed paragraph (c)(2) is not necessary because miners can readily check to confirm that the component is working.

MSHA solicits comments on whether the defects and corrective actions in proposed paragraphs (d)(1) and (d)(2) should be recorded. Comments are requested on whether the check for the miner-wearable component that would be required in proposed paragraph (c)(2) should be certified. Comments should be specific and include alternatives, rationale for suggested alternatives, safety benefits to miners, technological and economic feasibility considerations, and supporting data.

Proposed paragraph (d)(3) would require that: (1) The operator make and retain records at the completion of the examination under proposed paragraph (c)(3) of this section; (2) the qualified person conducting the examination would record and certify by signature and date that the examination was conducted; and a description of any defects and corrective actions and the date of corrective actions would be recorded. Making records of defects and corrective actions would provide a history of the defects documented at the mine to alert miners, representatives of miners, mine management and MSHA of recurring problems. MSHA believes that this proposed certification is necessary to assure compliance.

Proposed paragraph (d)(4) would require that the operator make and retain records of the persons trained in the installation and maintenance of proximity detection systems under proposed paragraph (b)(6) of this section. MSHA believes that this proposed record is necessary to assure that there is evidence that persons assigned to install and perform maintenance on proximity detection systems have been trained. MSHA does not anticipate that mine operators would need to make and retain records of training for proximity detection system manufacturers' employees who install or perform maintenance on their systems.

Proposed paragraph (d)(5) would require the operator to maintain records in a secure book or electronically in a secure computer system not susceptible to alteration. The records of checks, examinations, repairs, and training required under proposed paragraphs (d)(1)–(d)(4) of this section would be required to be in a book designed to prevent the insertion of additional pages or the alteration of previously entered information in the record. Based on MSHA's experience with other safety and health records, the Agency believes that records should be maintained so that they cannot be altered. In addition, electronic storage of information and access through computers is increasingly a common business practice in the mining industry. This proposed provision would permit the use of electronically stored records provided they are secure, not susceptible to alteration, able to capture the information and signatures required, and are accessible to the representative of miners and MSHA. MSHA believes that electronic records meeting these criteria are practical and as reliable as paper records. MSHA also believes that once records are properly completed and reviewed, mine management can use them to evaluate whether the same conditions or problems, if any, are recurring, and whether corrective measures are effective. Care must be taken in the use of electronic records to assure that the secure computer system will not allow information to be overwritten after being entered.

Proposed paragraph (d)(6) would require that the operator retain records for at least one year and make them available for inspection by authorized representatives of the Secretary and representatives of miners. This would apply to the records required under proposed paragraphs (d)(1)–(d)(4) of this section. MSHA believes that keeping records for one year provides a history of the conditions documented at the mine to alert miners, representatives of miners, mine management, and MSHA of recurring problems.

MSHA solicits comments on the requirements in proposed paragraph (d) of this section. Comments should be specific and include alternatives, rationale for suggested alternatives, safety benefits to miners, technological and economic feasibility considerations, and supporting data.

5. Section 75.1732(e) New Technology

Proposed § 75.1732(e) would provide that mine operators or manufacturers may apply to MSHA for acceptance of a proximity detection system that incorporates new technology. It would provide that MSHA may accept a proximity detection system if it is as safe as those which meet the requirements of this proposed rule.

NIOSH indicated in its comments on the RFI that it is in the process of developing a prototype system that pinpoints the location of the operator, or other workers, in the proximity of a remote controlled continuous mining machine. By doing so, the system is permitted to make decisions, such as disabling specific movements of the machine, while allowing the machine to continue to operate.

Consistent with MSHA's approach to new technology under existing 30 CFR part 7 Testing by applicant or third party, and existing 30 CFR 18.20(b), this proposed provision would allow for proximity detection systems that include improved technological capability.

This proposed provision would permit MSHA to consider proximity detection technology that may not meet the provisions in this proposal but that does meet the Agency's intent for reducing pinning, crushing, and striking accidents. For example, if a manufacturer develops a technology that can assure at least the same degree of protection as would be provided by this proposal, MSHA could consider such a system under this proposed provision.

In order to install a proximity detection system that does not conform to the requirements in this proposed rule, a mine operator or manufacturer would have to apply to the Chief of the A&CC, 765 Technology Drive, Triadelphia, West Virginia 26059. The mine operator or manufacturer would have to provide the rationale for requesting acceptance of a system. The A&CC would evaluate the proximity detection system to determine if it is as safe as a system meeting the requirements of this proposed rule. The evaluation might include an assessment of the technology used; the reliability of the system; the ability to stop movement of the machine before pinning, crushing, or striking a miner; the capability of providing early warning notification before stopping movement; the ability of the system to work while protecting multiple miners; and an assessment of the system's compatibility with other electrical systems in the mine.

At the conclusion of the A&CC evaluation, the Center Chief would issue a letter to the mine operator or manufacturer stating that the system is as safe as a system meeting the requirements of this proposed rule or explain why the system was found not acceptable. This letter would include any conditions of use that must be maintained to assure appropriate safety. Proposed § 75.1732(e) would apply when a mine operator wants to use a new technology proximity detection system.

MSHA solicits comments on this proposed provision. Comments should be specific and include alternatives, rationale for suggested alternatives, safety benefits to miners, technological and economic feasibility considerations, and supporting data.

III. Preliminary Regulatory Economic Analysis

A. Executive Orders (E.O.) 12866 and 13563

Executive Orders 12866 and 13563 direct agencies to assess all costs and benefits of available regulatory alternatives and, if regulation is necessary, to select regulatory approaches that maximize net benefits (including potential economic, environmental, public health and safety effects, distributive impacts, and equity). Executive Order 13563 emphasizes the importance of quantifying both costs and benefits, of reducing costs, of harmonizing rules, and of promoting flexibility. To comply with these Executive Orders, MSHA has prepared a Preliminary Regulatory Economic Analysis (PREA) for the proposed rule. The PREA contains supporting data and explanation for the summary materials presented in this preamble, including the covered mining industry, costs and benefits, feasibility, small business impacts, and paperwork. The PREA can be accessed electronically at *http://www.msha.gov/REGSINF5.HTM* or *http://www.regulations.gov.* A copy of the PREA can be obtained from MSHA's Office of Standards, Regulations and Variances at the address in the **ADDRESSES** section of this preamble. MSHA requests comments on all estimates of costs and benefits presented in this preamble and in the PREA, and on the data and assumptions the Agency used to develop estimates.

Under E.O. 12866, a significant regulatory action is one meeting any of a number of specified conditions, including the following: Having an annual effect on the economy of $100 million or more, creating a serious inconsistency or interfering with an action of another agency, materially altering the budgetary impact of entitlements or the rights of entitlement recipients, or raising novel legal or policy issues. MSHA has determined that this proposed rule would be a significant regulatory action because it raises novel legal and policy issues.

B. Population at Risk

The proposed rule would apply to all underground coal mines in the United States. For the 12 months ending January 2010, there were 424 underground coal mines employing approximately 47,000 miners and contractors (excluding office workers). MSHA estimates that total 2009 underground coal revenue was $18.5 billion.

C. Benefits

The proposed rule would significantly improve safety protections for underground coal miners by reducing their risk of being crushed, pinned, or struck by continuous mining machines.

MSHA reviewed the Agency's investigation reports for all powered haulage and machinery accidents that occurred during the 1984 through 2010 (27 years) period and determined that the use of proximity detection systems could have prevented 30 fatalities (1 per year) and 220 non-fatal injuries (8 per year) involving pinning, crushing, or striking accidents with mobile machines. This count of fatalities and injuries from pinning, crushing, or striking accidents excludes fatalities and injuries that could not have been prevented by proximity detection systems on continuous mining machines such as when a roof or rib fall pins a miner against a mobile machine or a mobile machine strikes and pushes another machine into a miner. Based on MSHA's historical data, MSHA also estimates that approximately two percent of the non-fatal injuries would be permanent partial or total disability injuries.

To estimate the monetary values of the reductions in fatalities and non-fatal injuries, MSHA performed an analysis of the imputed value of injuries and fatalities prevented based on a willingness-to-pay approach. This approach relies on the theory of compensating wage differentials (*e.g.,* the wage premium paid to workers to accept the risk associated with various jobs) in the labor market. A number of studies have shown a correlation between higher job risk and higher wages, suggesting that employees demand monetary compensation in return for incurring a greater risk of injury or fatality.

Viscusi & Aldy (2003) conducted an analysis of several studies (*i.e.*, meta-analysis) that use a willingness-to-pay methodology to estimate the imputed value of life-saving programs. This meta-analysis found that each fatality prevented was valued at approximately $7 million and each non-fatal injury was valued at approximately $50,000 in 2000 dollars. Using the GDP Deflator (U.S. Bureau of Economic Analysis, 2010), this yields an estimate in 2009 dollars of $8.7 million for each fatality prevented and $62,000 for each non-fatal injury prevented. MSHA is using the $8.7 million estimate for the value of a fatality prevented and $62,000 for each case of a non-fatal injury prevented (other than permanent disability). This value of a statistical life (VSL) estimate is within the range of the substantial majority of such estimates in the literature ($1 million to $10 million per statistical life), as discussed in OMB Circular A–4 (OMB, 2003).

Some of the pinning, crushing, or striking accidents caused permanent disability. Given the significant life-changing consequences of a permanent partial or total disability, MSHA does not believe that using the value estimated for a typical non-fatal injury is appropriate. Instead, MSHA based the value of a permanent partial or total disability prevented on the work of Magat, Viscusi, and Huber (1996), which estimated values for both a non-fatal lymph cancer prevented and a non-fatal nerve disease prevented. The Occupational Safety and Health Administration (OSHA) used this approach in the Final Economic Analysis (FEA) supporting its hexavalent chromium final rule, and the Environmental Protection Agency (EPA) used this approach in its Stage 2 Disinfectants and Disinfection Byproducts water rule (EPA, 2003).

Although permanent partial or total disabilities are neither non-fatal cancers nor nerve diseases, MSHA believes that they have a similar impact on the quality of life and would thus result in similar valuations. The Magat, Viscusi & Huber (1996) study estimates the value of preventing a non-fatal lymph cancer at 58.3 percent of the value of preventing a fatality. Similarly, they estimate the value of preventing a non-fatal nerve disease at 40.0 percent of the value of preventing a fatality. Of the two diseases valued in this study, MSHA believes that a disability resulting from injury more closely resembles the consequences of a nerve disease than the consequences of a non-fatal cancer. For example, loss of strength, inability to move easily, and constant pain are three main consequences of nerve disease that are similar to major consequences caused by a disability from a pinning, crushing, or striking injury. Accordingly, MSHA estimates the value of preventing a permanent disability as approximately equal to the value of preventing a nerve disease. MSHA estimates the value of a permanent partial or total disability prevented to be $3.5 million ($3.5 million = 40 percent of $8.7 million). MSHA solicits comments on its monetized value for permanent disability injuries.

Although MSHA is using the willingness-to-pay approach as the basis for monetizing the expected benefits of the proposed rule, the Agency does so with several reservations, given the methodological difficulties involved in

estimating the compensating wage differentials (Hintermann, Alberini, and Markandya, 2008). Furthermore, these estimates pooled across different industries may not capture the unique circumstances faced by coal miners. For example, some have suggested that VSL models be disaggregated to account for different levels of risk, as might occur in coal mining (Sunstein, 2004). In addition, coal miners may have few employment options and in some cases only one local employer. These near-monopsony or monopsony labor market conditions may depress wages below those in a more competitive labor market.

MSHA recognizes that monetizing the value of a statistical life is difficult and involves uncertainty and imprecision. In the future, MSHA plans to work with other agencies to refine the approach taken in this proposed rule.

MSHA estimates that the annual benefits from the proposed rule would be $1.6 million in the first year, increase to $10.7 million by the third year, and remain at $10.7 million every year thereafter (see Table 4).

MSHA developed the estimates in Table 4 by multiplying the number of fatalities and non-fatal injuries that would be prevented by the proposed rule by the monetized value of each adverse effect [$124,208 for a non-fatal injury (0.9818 × $62,000 + 0.0182 × $3,480,000) and $8.7 million for a fatality].

TABLE 4—MONETIZED ANNUAL VALUE OF FATALITIES AND NON-FATAL INJURIES PREVENTED BY THE PROPOSED RULE

[2009 Dollars]

Year	Benefit from preventing non-fatal injuries	Benefit from preventing fatalities	Total benefit
Year 1	$151,810	$1,450,000	$1,601,810
Year 2	809,652	7,733,333	8,542,985
Years 3+	1,012,065	9,666,667	10,678,732

More detailed information about how MSHA estimated benefits is available in the Preliminary Regulatory Economic Analysis (PREA) supporting this proposed rule. The PREA is available on MSHA's Web site, at *http://www.msha.gov/REGSINF5.HTM* and *http://www.regulations.gov*.

D. Compliance Costs

This section presents MSHA's estimates of costs that would be incurred by underground coal operators to comply with the proposed rule. These costs are based on the assessment by MSHA staff of the most likely actions that would be necessary to comply with the proposed rule. MSHA estimates that the present value of the capital costs of the proposed rule over the 18 month phase-in period discounted at a 7 percent rate would be $36.3 million.

The yearly costs would gradually increase from $4.1 million in the first year to $8.2 million in the second year and every year thereafter, as the requirements are phased in. See Table 5.

TABLE 5—SUMMARY OVER THREE YEARS OF PHASED-IN CAPITAL COST, ANNUALIZED CAPITAL COST, ANNUAL COST, AND YEARLY COST OF PROPOSED RULE

Year	One-time cost of newly phased-in PDS	Annualized one-time cost of newly phased-in PDS [a]	Annual cost of newly phased-in PDS	Yearly cost of previously phased-in PDS	Yearly cost [b]
Year 1	$15,934,628	$2,897,443	$1,228,635	$0	$4,126,078
Year 2	21,793,850	3,094,727	972,001	4,126,078	8,192,806
Years 3+	0	0	0	8,192,806	8,192,806

[a] Annualized One-Time Cost is Capital Cost amortized at a 7 percent discount rate.

[b] Yearly Cost is the sum of Annualized One-Time Cost of Newly Phased-In PDS, Annual Cost of Newly Phased-In PDS, and Yearly Cost of Previously Phased-In PDS.

E. Net Benefits

This section presents a summary of estimated benefits and costs of the proposed rule for informational purposes only. Under the Mine Act, MSHA is not required to use estimated net benefits as the basis for its decision. The estimated yearly costs exceed the estimated yearly benefits in the first year, but in the second and subsequent years the expected benefits exceed the expected cost. However, MSHA does not believe that this presents a complete indication of the net benefits of the proposed rule (see Table 6). The Agency anticipates several benefits from the proposed rule which were not quantified due to data limitations. For example, MSHA anticipates that the proposed rule would result in additional savings to mine operators by avoiding the production delays typically associated with mine accidents. Pinning, crushing, or striking accidents can disrupt production at a mine during the time it takes to remove the injured miners, investigate the cause of the accident, and clean up the accident site. Such delays can last for a shift or more. Factors such as lost production, damaged equipment, and other miscellaneous expenses could result in significant costs to operators; however, MSHA has not quantified these savings due to the imprecision of the data.

TABLE 6—CUMULATED BENEFITS, COSTS, AND NET BENEFITS (NET COSTS) BY YEAR

[2009 Dollars]

Year	Yearly benefits	Yearly costs	Net benefits (net costs)
Year 1	$1,601,810	$4,126,078	($2,524,269)
Year 2	8,542,985	8,192,806	350,179
Years 3+	10,678,732	8,192,806	2,485,926

IV. Feasibility

MSHA has concluded that the requirements of the proposed rule are both technologically and economically feasible, and that the 18 month phase-in period would facilitate implementation of the proposed rule.

A. Technological Feasibility

MSHA concludes that the proposed rule is technologically feasible. Mine operators are capable of equipping continuous mining machines with a proximity detection system in accordance with the compliance dates. The technology necessary to perform the proximity detection function required by the proposed rule on continuous mining machines already exists and is commercially available for underground coal mines.

MSHA has experience with manufacturers of proximity detection systems in the United States and mine operators who have installed proximity detection systems on continuous mining machines in underground coal mines. MSHA has approved three proximity detection systems under existing regulations for permissibility in 30 CFR part 18, and at least 35 continuous mining machines equipped with proximity detection systems are operating in underground coal mines in the United States. MSHA has tested and observed proximity detection systems providing warning and shutdown activation as expected on continuous mining machines in several underground coal mines. MSHA has also observed continuous mining machines equipped with proximity detection systems in South Africa and reviewed comments on the RFI stating that proximity detection systems are used in other countries.

The process of equipping continuous mining machines with proximity detection systems takes time to complete. MSHA would provide operators sufficient time to equip these machines and train miners.

B. Economic Feasibility

MSHA has traditionally used a revenue screening test—whether the yearly compliance costs of a regulation are less than 1 percent of revenues, or are negative (*e.g.*, provide net cost savings)—to establish presumptively that compliance with the regulation is economically feasible for the mining industry. Based upon this test, MSHA has concluded that the requirements of the proposed rule would be economically feasible. For the purpose of this analysis MSHA analyzed the impact of the costs in the second year, as this year represents the yearly cost after all of the requirements of the proposed rule would be in effect.

The yearly compliance cost to underground coal mine operators beginning in the second year would be $8.2 million. This represents approximately 0.04 percent of total annual revenue of $18.5 billion ($8.2 million costs/$18.5 billion revenue) for all underground coal mines. Since the estimated compliance cost is below one percent of estimated annual revenue, MSHA concludes that compliance with the provisions of the proposed rule would be economically feasible for the underground coal industry.

V. Regulatory Flexibility Act and Small Business Regulatory Enforcement Fairness Act

Pursuant to the Regulatory Flexibility Act (RFA) of 1980, as amended by the Small Business Regulatory Enforcement Fairness Act (SBREFA), MSHA has analyzed the compliance cost impact of the proposed rule on small entities. Based on that analysis, MSHA certifies that the proposed rule would not have a significant economic impact on a substantial number of small entities in terms of compliance costs. Therefore, the Agency is not required to develop an initial regulatory flexibility analysis.

The factual basis for this certification is presented in full in Chapter VII of the PREA and in summary form below.

A. Definition of a Small Mine

Under the RFA, in analyzing the impact of a rule on small entities, MSHA must use the Small Business Administration's (SBA's) definition for a small entity, or after consultation with the SBA Office of Advocacy, establish an alternative definition for the mining industry by publishing that definition in the **Federal Register** for notice and comment. MSHA has not established an alternative definition, and is required to use SBA's definition. The SBA defines a small entity in the mining industry as an establishment with 500 or fewer employees.

MSHA has also examined the impact of the proposed rule on mines with fewer than 20 employees, which MSHA and the mining community have traditionally referred to as ''small mines.'' These small mines differ from larger mines not only in the number of employees, but also in economies of scale in material produced, in the type and amount of production equipment, and in supply inventory. Therefore, their costs of complying with MSHA's rules and the impact of the agency's rules on them will also tend to be different.

This analysis complies with the requirements of the RFA for an analysis of the impact on ''small entities'' while continuing MSHA's traditional definition of ''small mines.''

B. Factual Basis for Certification

MSHA's analysis of the economic impact on ''small entities'' begins with a ''screening'' analysis. The screening compares the estimated costs of the proposed rule for small entities to their estimated revenues. When estimated costs are less than one percent of estimated revenues (for the size categories considered), MSHA believes it is generally appropriate to conclude that there is no significant economic impact on a substantial number of small entities. If estimated costs are equal to or exceed one percent of revenues, further analysis may be warranted.

Revenue for underground coal mines is derived from data on coal prices and tonnage. The average open market U.S. sales price of underground coal for 2009 was $55.77 per ton. This average price of underground coal for 2009 is from the Department of Energy (DOE), Energy Information Administration (EIA), *Annual Coal Report 2009,* October 2010, Table 28.

Total underground coal production in 2009 was approximately 5.2 million tons for mines with 1–19 employees. Multiplying tons by the 2009 price per ton, 2009 underground coal revenue

was $287 million for mines with 1–19 employees. Total underground coal production in 2009 was approximately 242 million short tons for mines with 1–500 employees. Multiplying tons by the 2009 price per ton, 2009 underground coal revenue was $13.5 billion for mines with 1–500 employees. Total underground coal production in 2009 was approximately 332 million tons. Multiplying tons by the 2009 price per ton, total estimated revenue in 2009 for underground coal production was $18.5 billion.

For the purpose of this analysis MSHA analyzed the potential impact of the costs in the second year, as this year represents the yearly cost of the proposed rule after all of the requirements would be in effect. The estimated yearly cost of the proposed rule for underground coal mines with 1–19 employees is approximately $0.7 million beginning in the second year, which represents approximately 0.24 percent of annual revenues. MSHA estimates that some mines might experience costs somewhat higher than the average per mine in their size category while others might experience lower costs.

When applying SBA's definition of a small mine, the estimated yearly cost of the proposed rule for underground coal mines with 1–500 employees is approximately $7.5 million beginning in the second year, which represents approximately 0.06 percent of annual revenue.

Based on this analysis, MSHA has determined that the proposed rule would not have a significant economic impact in terms of compliance costs on a substantial number of small underground coal mines. MSHA has certified that the proposed rule would not have a significant impact on a substantial number of small mining entities, as defined by SBA. MSHA has provided, in the PREA accompanying this proposed rule, a complete analysis of the proposed cost impact on this category of mines.

VI. Paperwork Reduction Act of 1995

A. Summary

In the first three years the proposed rule would be in effect, the mining community would incur 2,582 annual burden hours with related annual burden costs of approximately $99,460, and other annual costs related to the information collection package of approximately $18,517.

B. Procedural Details

The information collection package for this proposed rule has been submitted to OMB for review under 44 U.S.C. 3504, paragraph (h) of the Paperwork Reduction Act (PRA) of 1995, as amended. For a detailed summary of the burden hours and related costs by provision, see the information collection package accompanying this proposed rule. A copy of the information collection package can be obtained from *http://www.msha.gov/regspwork.htm* or *http://www.regulations.gov* on the day following publication of this notice in the **Federal Register** or from the Department of Labor by electronic mail request to Michel Smyth at *smyth.michel@dol.gov* (e-mail) or (202) 693–4129 (voice) or Roslyn Fontaine at *fontaine.roslyn@dol.gov* or by phone request to (202) 693–9440 (voice).

MSHA requests comments to:

- Evaluate whether the proposed collection of information is necessary for the proper performance of the functions of the agency, including whether the information will have practical utility;
- Evaluate the accuracy of the Agency's estimate of the burden of the proposed collection of information, including the validity of the methodology and assumptions used;
- Enhance the quality, utility, and clarity of the information to be collected; and
- Minimize the burden of the collection of information on those who are to respond, including through the use of appropriate automated, electronic, mechanical, or other technological collection techniques or other forms of information technology, *e.g.,* permitting electronic submission of responses.

Comments on the information collection requirements should be sent to both OMB and MSHA. Addresses for both offices can be found in the **ADDRESSES** section of this preamble. The Department of Labor notes that, under the PRA, affected parties do not have to comply with the information collection requirements in § 75.1732 until the Department of Labor publishes a notice in the **Federal Register** that they have been approved by the Office of Management and Budget (OMB). A delayed implementation of information collection requirements would not affect the implementation of the underlying substantive requirements.

The total information collection burden is summarized as follows:

Title of Collection: Proximity Detection Systems.

OMB Control Number: 1219–NEW NUMBER.

Affected Public: Private Sector-Businesses or other for-profits.

Estimated Number of Respondents: 433 respondents.

Estimated Number of Responses: 565,613 responses.

Estimated Annual Burden Hours: 2,582 hours.

Estimated Annual Cost Related to Burden Hours: $99,460.

Estimated Other Annual Costs Related to the Information Collection Package: $18,517.

VII. Other Regulatory Considerations

A. The Unfunded Mandates Reform Act of 1995

MSHA has reviewed the proposed rule under the Unfunded Mandates Reform Act of 1995 (2 U.S.C. 1501 *et seq.*). MSHA has determined that the proposed rule would not include any Federal mandate that may result in increased expenditures by State, local, or Tribal governments; nor would it increase private sector expenditures by more than $100 million in any one year or significantly or uniquely affect small governments. Accordingly, the Unfunded Mandates Reform Act of 1995 requires no further Agency action or analysis.

MSHA estimates that the costs of the rule would vary by year, because of the different phase-in periods. The cost within each year is the sum of one-time costs of newly phased-in proximity detection systems and the annual cost of all phased-in systems. MSHA estimates the rule would cost approximately: $17.2 million ($15,934,628 + $1,228,635) in the first year, $24 million ($21,793,850 + $1,228,635 + $972,001) in the second year, and $2.2 million ($1,228,635 + $972,001) in each subsequent year. Since the proposed rule would not cost over $100 million in any one year, the proposed rule would not be a major rule under the Unfunded Mandates Reform Act of 1995.

B. Executive Order 13132: Federalism

The proposed rule does not have ''federalism implications'' because it would not ''have substantial direct effects on the States, on the relationship between the national government and the States, or on the distribution of power and responsibilities among the various levels of government.'' Accordingly, under E.O. 13132, no further Agency action or analysis is required.

C. The Treasury and General Government Appropriations Act of 1999: Assessment of Federal Regulations and Policies on Families

Section 654 of the Treasury and General Government Appropriations

Act of 1999 (5 U.S.C. 601 note) requires agencies to assess the impact of Agency action on family well-being. MSHA has determined that the proposed rule would have no effect on family stability or safety, marital commitment, parental rights and authority, or income or poverty of families and children. Accordingly, MSHA certifies that this proposed rule would not impact family well-being.

D. Executive Order 12630: Government Actions and Interference With Constitutionally Protected Property Rights

The proposed rule would not implement a policy with takings implications. Accordingly, under E.O. 12630, no further Agency action or analysis is required.

E. Executive Order 12988: Civil Justice Reform

The proposed rule was written to provide a clear legal standard for affected conduct and was carefully reviewed to eliminate drafting errors and ambiguities, so as to minimize litigation and undue burden on the Federal court system. Accordingly, the proposed rule would meet the applicable standards provided in section 3 of E.O. 12988, Civil Justice Reform.

F. Executive Order 13045: Protection of Children From Environmental Health Risks and Safety Risks

The proposed rule would have no adverse impact on children. Accordingly, under E.O. 13045, no further Agency action or analysis is required.

G. Executive Order 13175: Consultation and Coordination With Indian Tribal Governments

This proposed rule does not have ''Tribal implications'' because it would not ''have substantial direct effects on one or more Indian Tribes, on the relationship between the Federal government and Indian Tribes, or on the distribution of power and responsibilities between the Federal government and Indian Tribes.'' Accordingly, under E.O. 13175, no further Agency action or analysis is required.

H. Executive Order 13211: Actions Concerning Regulations That Significantly Affect Energy Supply, Distribution, or Use

Executive Order 13211 requires agencies to publish a statement of energy effects when a rule has a significant energy action that adversely affects energy supply, distribution or use. MSHA has reviewed this proposed rule for its energy effects because the proposed rule would apply to the underground coal mining sector. Because this proposed rule would result in maximum yearly costs of approximately $8.2 million to the underground coal mining industry, relative to annual revenues of $18.5 billion in 2009, MSHA has concluded that it would not be a significant energy action because it is not likely to have a significant adverse effect on the supply, distribution, or use of energy. Accordingly, under this analysis, no further Agency action or analysis is required.

I. Executive Order 13272: Proper Consideration of Small Entities in Agency Rulemaking

MSHA has reviewed the proposed rule to assess and take appropriate account of its potential impact on small businesses, small governmental jurisdictions, and small organizations. MSHA has determined and certified that the proposed rule would not have a significant economic impact on a substantial number of small entities.

VIII. References

Bartels, J.R., D.H. Ambrose, S.G. Gallagher. ''Analyzing Factors Influencing Struck-By Accidents of a Moving Mining Machine by Using Motion Capture and DHM Simulations,'' *SAE Int J Passeng Cars, Electron Electr Syst,* 1(1):559–604, April 2009.

Dransite, Jerry, G. Clark, B. Warnock, D. Wease. ''Remotely Controlled Mining Machinery Study,'' MSHA Approval and Certification Center, August 3, 1998.

Rasche, Tilman. ''Bowtie Analysis of Vehicle Collision Accidents—a Case for Proximity Detection and Vehicle Collision Avoidance Systems,'' Queensland, Australia: Department of Employment, Economic Development and Innovation, 2009.

Ruff, TM. ''Recommendations for evaluating and implementing proximity warning systems on surface mining equipment,'' Spokane, WA: U.S. Department of Health and Human Services, Centers for Disease Control and Prevention, National Institute for Occupational Safety and Health, DHHS (NIOSH) Publication No. 2007–146, RI 9672, 2007.

Schiffbauer, W. H. ''An Active Proximity Warning System for Surface and Underground Mining Applications,'' *Min Eng,* 54(12):40–48, 2002.

U.S. Department of Labor, Mine Safety and Health Administration, ''Program Policy Manual, Vol. V—Coal Mines, Criteria—Mantrips,'' October 2003 (Release V–34), pp. 126 and 127.

U.S. Department of Labor, Mine Safety and Health Administration, ''Proximity Protection System Specification.'' October 4, 2004.

U.S. Department of Labor, Mine Safety and Health Administration, Request for Information. ''Proximity Detection Systems for Underground Mines,'' **Federal Register**, Vol. 75, pg. 2009, February 1, 2010.

U.S. Department of Labor, Mine Safety and Health Administration. ''Preliminary Regulatory Economic Analysis for Proximity Detection Systems for Continuous Mining Machines in Underground Coal Mines, Proposed Rule (RIN 1219–AB65),'' *http://www.msha.gov/rea.HTM,* August, 2011.

List of Subjects in 30 CFR Part 75

Mine safety and health, Reporting and recordkeeping requirements, Underground coal mines.

Dated: August 25, 2011.

Joseph A. Main,

Assistant Secretary of Labor for Mine Safety and Health.

For the reasons set out in the preamble and under the authority of the Federal Mine Safety and Health Act of 1977, as amended, MSHA is proposing to amend chapter I of title 30 of the Code of Federal Regulations as follows:

PART 75—MANDATORY SAFETY STANDARDS—UNDERGROUND COAL MINES

1. The authority citation for part 75 continues to read as follows:

Authority: 30 U.S.C. 811.

2. Add § 75.1732 to subpart R to read as follows:

§ 75.1732 Proximity detection systems.

Operators shall install proximity detection systems on certain mobile machines.

(a) *Machines covered.* Operators must equip continuous mining machines (except full-face continuous mining machines) with a proximity detection system in accordance with the following dates.

Compliance date	Machine type	Date of manufacture
November 30, 2011	Continuous Mining Machines (except full-face continuous mining machines)	After August 31, 2011.
February 28, 2013	Continuous Mining Machines (except full-face continuous mining machines)	On or before August 31, 2011.

(b) *Requirements for proximity detection systems.* A proximity detection system must:

(1) Cause a machine to stop no closer than 3 feet from a miner except for a miner who is:

(i) In the on-board operator's compartment; or

(ii) Remotely operating a continuous mining machine while cutting coal or rock, in which case, the proximity detection system must cause the machine to stop before contacting the machine operator.

(2) Provide an audible or visual warning signal, distinguishable from other signals, when the machine is 5 feet and closer to a miner except for a miner who is:

(i) In the on-board operator's compartment; or

(ii) Remotely operating a continuous mining machine while cutting coal or rock.

(3) Provide a visual signal on the machine that indicates the system is functioning properly;

(4) Prevent movement of the machine if the system is not functioning properly. However, a system that is not functioning properly may allow machine movement if an audible or visual warning signal, distinguishable from other signals, is provided during movement. Such movement is permitted only for purposes of relocating the machine from an unsafe location for repair;

(5) Be installed to prevent interference with or from other electrical systems; and

(6) Be installed and maintained by a person trained in the installation and maintenance of the system.

(c) *Examination and checking.* Operators must:

(1) Designate a person who must perform a visual check of machine-mounted components of the proximity detection system to verify that components are intact, that the system is functioning properly, and take action to correct defects—

(i) At the beginning of each shift when the machine is to be used;

(ii) Immediately prior to the time the machine is to be operated if not in use at the beginning of a shift; or

(iii) Within 1 hour of a shift change if the shift change occurs without an interruption in production.

(2) Check for proper operation of miner-wearable components at the beginning of each shift that the component is to be used. Defects must be corrected before the component is used.

(3) Designate a qualified person under § 75.153 to examine proximity detection systems for the requirements in paragraphs (b)(1) through (5) of this section at least every 7 days. Defects in the proximity detection system must be corrected before the machine is returned to service.

(d) Certification and records. The operator must make and retain certification and records as follows:

(1) At the completion of the check required under paragraph (c)(1) of this section, a certified person under § 75.100 must certify by initials, date, and time that the check was conducted. Defects found as a result of the check in (c)(1) of this section, including corrective actions and date of corrective action, must be recorded.

(2) Defects found as a result of the check in (c)(2) of this section, including corrective actions and date of corrective action, must be recorded.

(3) At the completion of the examination required under paragraph (c)(3) of this section, the qualified person must record and certify by signature and date that the examination was conducted. Defects, including corrective actions and date of corrective action, must be recorded.

(4) Make a record of the persons trained in the installation and maintenance of proximity detection systems required under paragraph (b)(6) of this section.

(5) Maintain records in a secure book or electronically in a secure computer system not susceptible to alteration.

(6) Retain records for at least one year and make them available for inspection by authorized representatives of the Secretary and representatives of miners.

(e) *New technology.* Mine operators or manufacturers may apply to MSHA for acceptance of a proximity detection system that incorporates new technology. MSHA may accept a proximity detection system if it is as safe as those which meet the requirements of this section.

[FR Doc. 2011–22125 Filed 8–29–11; 11:15 am]

BILLING CODE 4510–43–P

POSTAL REGULATORY COMMISSION

39 CFR Parts 3001 and 3025

[Docket No. RM2011–13; Order No. 814]

Appeals of Post Office Closings

AGENCY: Postal Regulatory Commission.

ACTION: Proposed rulemaking.

SUMMARY: This document proposes revisions to the Commission's rules for appeals of post office closings. The existing rules are unnecessarily complex and outmoded. The revisions update the rules and shorten the appeal process. They also provide a clearer explanation of the appeal process, of how to participate in that process, and of the nature of the Commission's review. The Commission invites comments on the proposed revisions.

DATES: *Comments are due:* October 3, 2011.

ADDRESSES: Submit comments electronically by accessing the ''Filing Online'' link in the banner at the top of the Commission's Web site (*http://www.prc.gov*) or by directly accessing the Commission's Filing Online system at *https://www.prc.gov/prc-pages/filing-onling/login.aspx.* Commenters who cannot submit their views electronically should contact the person identified in the **FOR FURTHER INFORMATION CONTACT** section for advice on alternatives to electronic filing.

FOR FURTHER INFORMATION CONTACT: Stephen L. Sharfman, General Counsel, at 202–789–6820 (for proposal-related information) or *DocketAdmins@prc.gov* (for electronic filing assistance.)

SUPPLEMENTARY INFORMATION:

Table of Contents

I. Introduction
II. Advantages of the New Rules
III. Obsolete Practices
IV. New Postal Service Regulations
V. Appeals From Closings of Stations and Branches
VI. Suspended Offices
VII. Section-by-Section Analysis
VIII. Conclusion

I. Introduction

Section 404(d)(5) of title 39, U.S. Code, provides that when the Postal Service makes a decision to close or consolidate a post office, customers of the post office may appeal the decision to the Postal Regulatory Commission. The Commission's rules governing such

appeals were adopted over 30 years ago in 1977 and are unnecessarily complex. The Commission's practices have evolved since then. Also, the Postal Service has recently revised its rules setting out procedures for the closing or consolidation of post offices. Accordingly, the Commission proposes revisions to its rules governing appeals of post office closings and consolidations to make them more accurately reflect current practices and more user friendly.

II. Advantages of the New Rules

The new rules streamline the procedures for appeals. Under current practice, the Commission posts petitions for review on its Web site and sends a notice (PRC Form 56) to the Postal Service. *See, e.g.,* Docket No. A2011–14, Notice of Filing Under 39 U.S.C. 404(d), May 5, 2011. Under the new rules this procedural step will be unnecessary. The posting of documents on the Commission's Web site has become the standard method of serving documents. 39 CFR 3001.12. The posting of a petition for review on the Commission's Web site will provide notice to the Postal Service of an appeal.

The new rules simplify the procedures for persons wishing to appeal a post office closing or consolidation. The new rules excuse petitioners and persons other than the Postal Service from electronic filing requirements. Since the Commission's electronic filing requirements were enacted, numerous requests for waiver of those requirements have accompanied appeals of post office closings or consolidations. The Commission has always granted waivers and allowed appeals filed by First-Class Mail. The requirement to obtain a waiver of those requirements places unnecessary burdens on persons appealing a post office closing or consolidation.

The new rules also excuse participants who choose to file by First-Class Mail from service on other participants. The new rules provide for service of documents by First-Class Mail to participants (but not the Postal Service) who do not use Filing Online. The Secretary of the Commission would be responsible for sending the documents by mail. This rule only would apply to appeals of post office closings and consolidations. The administrative record would not be served by mail. Rather, the Postal Service would have to notify by First-Class Mail participants who do not use electronic filing both when the administrative record is filed and where it is available for review. The Postal Service must make the administrative record and all filings in the appeal available at the post office to be closed or consolidated and at post offices likely to serve a significant number of customers of the post office under study.

The new rules remove the requirement for participants to file a notice of intervention. Rather, interested persons may simply file comments or briefs by deadlines established in these rules. The new rules reflect Commission practice to accept comments or statements without requiring a notice of intervention.

The new rules specifically clarify that when a retail facility is relocated within a community so that the number of facilities within that community does not change, that relocation is not a closing that can be appealed to the Commission.

The current rules are unnecessarily difficult to understand. *See, e.g.*, Docket No. A2011–15, Initial Brief in Support of Petition, June 7, 2011, at 15 (suggesting a need for ''[b]etter notification of the right to appeal and more detailed guidance for a layperson undertaking a highly legalistic venture * * *.''). Most petitioners are not lawyers and do not employ counsel. Accordingly, the Commission has edited the rules by shortening sentences and removing legal jargon wherever possible.

The new rules are intended to eliminate delay in filing the administrative record. In appeals of the closings of stations and branches, the Postal Service has previously not filed an administrative record because ''In the Postal Service's view, the discontinuance of [a s]tation does not require an official administrative record conforming to Post Office discontinuance regulations in 39 CFR Part 241.3 and Handbook PO–101. * * *'' Docket No. A2011–16, Notice of United States Postal Service, May 31, 2011, at 1–2. In some cases this has resulted in unnecessary expense and delay. *See, e.g.*, Docket No. A2011–16, City of Akron, Ohio's Motion to Compel Administrative Record and Extend the Deadline for Petitioner and City of Akron, Ohio to File Form 61 and/or an Initial Brief, June 10, 2011. In other cases, the Commission has had to obtain the administrative record by issuing an information request. *See, e.g.*, Docket No. A2011–13, Commission Information Request No. 1, June 9, 2011. This, in turn, has caused delay in the filing of briefs. *See, e.g.*, Docket No. A2011–16, Order Granting Extension and Modifying Procedural Schedule, June 23, 2011.

The Postal Service has now revised its regulations so that the rules for creating an administrative record apply when the Postal Service considers closing or consolidating any Postal Service operated retail facility. 39 CFR 241.3(a)(1)(i), 76 FR 41420 (July 14, 2011). However, the Postal Service's new rules do not apply to closings or consolidations that were already under study prior to July 14, 2011. 39 CFR 241.3(a)(1)(ii), 76 FR 41420 (July 14, 2011). Thus, the Commission may still receive appeals in which the supporting documentation was created ''pursuant to specially crafted procedures for stations and branches'' and is not considered by the Postal Service to be a proper ''administrative record.'' Docket No. A2011–17, United States Postal Service Notice of Filing and Application for Non-Public Status, July 1, 2011, at 2. In order to forestall delays of the type described above, the Commission is defining ''administrative record'' to include all the documentation that supports the decision for which review is sought.

The new rules provide for a more rapid procedural schedule. The administrative record is due 10 days after the posting of a petition for review on the Commission's Web site. The current rules provide 15 days. The shortening of this time should not present difficulties for the Postal Service. The Postal Service has stated that documents regarding closings and consolidations are ''typically transmitted electronically * * *.'' 76 FR 17794, 17796 (March 31, 2011). If the administrative record is in electronic form, it should be easy to file it electronically within 10 days.

Petitioner's statement or brief is due 20 days after the filing of the administrative record. This is the same amount of time provided under the current rules. The responsive brief or statement of the Postal Service is due 14 days from the filing of petitioner's statement or brief. This has been shortened from 20 days under the current rules. The reply to the Postal Service response is due 7 days from the filing of the response. This has been shortened from 15 days under the current rules. The new deadlines will allow for speedier decisions. Although by law the Commission has up to 120 days to issue its decision in these cases, Commission decisions would now be expected to issue within 75 days.

Section 404(d)(5) grants the Commission authority to suspend the effectiveness of a final determination until an appeal has been decided. The existing rules require an appellant or intervenor to file an application for

suspension and allow 10 days for a Postal Service answer. The new rules simply suspend the effectiveness of a final determination until an appeal is decided. The Commission believes that, absent extraordinary circumstances, no post office should be closed or consolidated if an appeal is pending, and requiring a petitioner to apply for a suspension causes unnecessary paperwork for both the petitioner and for the Postal Service. However, the Commission recognizes that this proposed rule could lead to some additional expense for the Postal Service. Therefore, the Postal Service is requested to address this potential with reference to the Commission's expectation that the revisions in these rules should allow more rapid decisions on appeals.

III. Obsolete Practices

Several features of the existing rules do not reflect current practice. The existing rules prescribe the content of briefs in great detail. In recent years briefs have seldom been filed. Petitioners, for the most part, file PRC Form 61, which provides a template for petitioners to use for submitting their arguments, in lieu of an initial brief, and the Postal Service has taken to filing comments in lieu of an answering brief. Petitioners rarely file reply briefs, although they sometimes send a letter disputing the Postal Service's comments. The new rules establish that petitioners and other interested persons may file comments in addition to or in place of a brief. The new rules also delete the detailed format and content requirements for briefs.

An oral argument has never been held in an appeal of a post office closing or consolidation. The current rules allow for oral argument only under unusual circumstances. The Commission has decided to remove the rule providing for oral argument. The Commission's experience with appeals of post office closings and consolidations reveals that written pleadings provide sufficient bases for decisions.

IV. New Postal Service Regulations

The Postal Service recently adopted new regulations governing the closing or consolidation of post offices. 76 FR 41413 (July 14, 2011). According to the Postal Service, the Commission's advisory opinion on the closing of stations and branches in Docket No. N2009–1 ''had a major influence on the Postal Service's larger effort to revise its discontinuance procedures * * *.'' [1] *Id.* at 41418. The Commission appreciates the Postal Service's responsiveness to the recommendations in that opinion.

The Postal Service's new regulations set out a three-stage procedure for closing or consolidating Postal Service operated retail facilities. The Postal Service has taken a major step by applying the same rules to the closing of stations and branches as apply to the closing or consolidation of post offices. This was one of the principle recommendations in the Commission's advisory opinion.

The first stage of the closing process is an ''initial feasibility study.'' 39 CFR 241.3(a)(5); 76 FR 41421. Such a feasibility study may be initiated by a district manager or the responsible headquarters vice president. The feasibility study is preliminary to the statutorily mandated stages of proposal and written determination. *See* 39 U.S.C. 404(d)(1), (3). During the feasibility study, customers must be sent a questionnaire and notice that the facility is under study for closing or consolidation. The Postal Service has also expanded the types of customers who must receive notice by mail. These steps are a response to Commission recommendations that all potential customers of a facility receive actual notice of possible closing. 76 FR 41418.

The second stage of the closing process is publication of a formal proposal to close. Section 404(d)(1) of title 39, United States Code, requires the Postal Service to give ''adequate'' notice of its intent to close or consolidate a post office to persons served by that post office. Prior to adopting new rules, the Postal Service's practice of giving notice varied. The Postal Service has been known to send notice of intent to close (in the form of questionnaires) to thousands of customers of a station or branch. *See* Docket No. A2011–8, Comments of the United States Postal Service, April 11, 2011, at 2–3. On the other hand, the Postal Service has sent letters just to ''community leaders.'' Docket No. A2011–12, Notice of United States Postal Service, April 12, 2011, at 3. In the case of suspended post offices, the Postal Service posted a notice in some other post office. Docket No. A2011–3, Order Dismissing Appeal, February 11, 2011, at 3. Adequate notice is essential so that patrons can communicate their concerns prior to a final determination and have an opportunity to correct Postal Service errors by appealing a final determination. The Postal Service's new rules now require that better notice be given to all patrons of post offices, stations, and branches even if a facility is suspended.

The Postal Service's new regulations provide that notice of a proposed closing or consolidation must be posted at the facility being studied and at nearby facilities. An invitation to comment must also be posted at those facilities. 39 CFR 241.3(d)(1); 76 FR 41423. Customers must be given 60 days to submit comments, 39 CFR 241.3(d)(2), and a public meeting with customers must be held. *Id.* at 241.3(d)(3). The new Postal Service regulations represent an expansion of notice and comment opportunities. Previously, notice of a proposal to close might only be posted in the facility being studied. Customers of stations and branches had only 10 days to comment. Holding a public meeting was optional. The Commission recommended these expansions in its Docket No. N2009–1 Advisory Opinion on station and branch closings. These new procedures will significantly reduce concerns about the adequacy of notice and may well reduce the number of appeals.

The third stage of the closing process is publication of a written determination to close. By statute, the written determination must ''be made available to persons served by'' the post office to be closed or consolidated. 39 U.S.C. 404(d)(3). Patrons of the post office to be closed are entitled to appeal to the Postal Regulatory Commission. The Commission's rules have always required the Postal Service to give notice to patrons of their right to appeal. *See* 39 CFR 3001.110. The Postal Service's former rules had a similar provision. *See* former 39 CFR 241.3(f)(2)(ii) (2009). The Postal Service's new rules retain this provision, but do not require notice of appeal rights to cover stations and branches. 39 CFR 241.3(f)(2)(ii); 76 FR 41424. Proposed rule 3025.3(b) applies the Commission determination that patrons of any Postal Service operated retail facility may appeal a Postal Service determination to close or consolidate that facility.

In summary, the Postal Service has responded to many of the concerns expressed in the Commission's Advisory Opinion on closing of stations and branches. During its initial feasibility study, the Postal Service will mail notices and questionnaires to all delivery addresses in the Zip Code of the post office under study and to delivery addresses for which the post office under study provides allied delivery services. During the proposal and final determination stages, the Postal Service will post notice at the

[1] Docket No. N2009–1, Advisory Opinion Concerning the Process for Evaluating Closing Stations and Branches, March 10, 2010 (Docket No. N2009–1 Advisory Opinion).

post office under study, at the post office that will serve as a supervising facility, and at any retail facility likely to serve a significant number of customers of the facility under study. These steps will help ensure that customers receive adequate notice of possible closings and consolidations of post offices.

V. Appeals From Closings of Stations and Branches

There has been disagreement and resulting confusion about the scope of the Commission's authority under section 404(d)(5) to hear appeals of a ''determination by the Postal Service to close or consolidate any post office * * *.'' The Commission seeks to clarify the scope of its authority and eliminate any public confusion on when persons served by a particular office may appeal a determination to close or consolidate that office. Thus, the Commission includes a proposed definition of the term ''post office'' as it is used in these rules governing appeals of closings and consolidations.[2]

The Commission believes that its proposed definition, that ''post office'' means ''a Postal Service operated retail facility'' reflects the plain meaning of the term ''post office'' as it is used in section 404(d)(5). The Commission has always considered retail outlets classified as stations and branches by the Postal Service for internal administrative purposes to be included within the terms ''post offices'' and ''offices'' appearing in section 404(d)(5). *See* Docket No. N2009–1, Advisory Opinion at 65. In interpreting the scope of its authority under that section, the Commission has consistently held that persons served by stations and branches have the right to appeal determinations to close their offices.

The Postal Service has argued that the Commission has been inconsistent in its decisions allowing appeals relating to various types of retail facilities. *See* Docket No. A2010–3, Comments of United States Postal Service Regarding Jurisdiction Under (Current) Section 404(d), April 19, 2010, at 10–19 (Docket No. A2010–3 Comments). These alleged inconsistencies evaporate, however, when one distinguishes cases finding *sufficient* conditions for appealability from cases establishing *necessary* conditions. The Postal Service has interpreted cases establishing *a* basis for Commission jurisdiction as if they established *the* basis for jurisdiction. For example, the Postal Service cites Docket No. A83–30, Knob Creek, WV, as establishing a standard that section 404(d) only applies when a closed retail facility is the only retail facility in a community. Docket No. A2010–3 Comments at 10–11. However, the Commission was careful to state

> An important intent, *but not the only one,* of Congress was to apply § 404(b) to the closing of the sole postal retail facility serving a community.

Docket No. A83–30, Commission Opinion Remanding Determination for Further Consideration, January 18, 1984, at 8 (emphasis added) (Docket No. A83–30 Opinion). That opinion also relied on the definition of ''post office''—a retail facility where patrons may purchase postal services, and dispatch and possibly receive mail—that is consistent, albeit less precise, than the one proposed herein. *Id.* at 3. There was certainly no declaration that section 404(d) (then 404(b)) applied only to the closing or consolidation of the sole retail facility in a community.

The Commission will carefully review alternative definitions offered by the Postal Service and any other interested commenters. A thorough review of the issue and the establishment of a clear and understandable definition through rulemaking will eliminate confusion to the benefit of the Commission, the Postal Service, and all postal patrons.

VI. Suspended Offices

The Commission welcomes the Postal Service's establishment of uniform notice requirements. These new requirements represent the clear intent of the Postal Service to take reasonable steps to ensure that patrons receive actual notice of proposals to close and of final determinations to close. The Commission's concern that patrons receive actual notice was expressed in its advisory opinion on station and branch closings and in its comments on the Postal Service's proposed rules for closings and consolidations. However, that concern persists with respect to post offices where service was suspended prior to the initiation of the three-step process. Patrons of suspended post offices have complained that the posting of a proposal to close or a final determination at a distant post office fails to provide adequate notice. *See, e.g.,* Docket No. A2011–3, Request to File an Appeal Regarding the Final Determination to Close the Suspended Graves Mill, VA Post Office and Continue to Provide Rural Route Service, November 22, 2010, at 3 (suggesting that the Postal Service should have notified customers by letter that a final determination to close a suspended office had been posted at distant post offices).

The Postal Service's new rules do not specifically change the practice of posting at potentially distant post offices proposals to close and final determinations to close suspended post offices. 39 CFR 241.3(d)(1)(iv), 241.3(g)(1)(i); 76 FR 41423–24. The Commission proposes rule 3025.3(c) requiring that customers of suspended post offices receive notice of proposals to close and final determinations by First-Class Mail. If providing such notice is likely to unduly burden the Postal Service, it should discuss the issue in its comments on these rules.

VII. Section-by-Section Analysis

Paragraph 3001.9(a) is amended by revising it to allow participants (other than the Postal Service) in appeals of post office closings and consolidations to file hard-copy documents.

Section 3001.10, concerning the form and number of copies of documents, is amended by revising it so as not to apply to participants (other than the Postal Service) in appeals of post office closings and consolidations.

Paragraph 3001.12(a) is amended by revising it to provide for service of documents (other than an administrative record) by the Secretary on participants (other than the Postal Service) in appeals of post office closings and consolidations who do not use Filing Online.

Paragraph 3001.17(b) is amended by revising it to change a reference from subpart H, which is being repealed, to part 3025.

Subpart H of part 3001 of chapter III of title 39 which deals with appeals of post office closings and consolidations, is removed in its entirety.

A new section 3025.1 provides definitions of the terms ''final determination,'' ''administrative record,'' ''petitioner,'' ''post office,'' and ''relocate.'' The definition of ''post office'' makes clear that stations and branches are post offices for purposes of appealing a closing or consolidation.

Section 3025.2 replaces § 3001.110. New § 3025.2 sets out when the rules of part 3025 apply. A new paragraph has been added clarifying that the relocation of a post office within a community is not a closing or consolidation.

Section 3025.3 contains new notice requirements. If the Postal Service decides to propose to close or consolidate a post office, it must give to all persons served by that post office notice of its intent to close or consolidate. The notice must inform patrons that they may submit

[2] The definition of this term in the context of appeals of determinations to close or consolidate offices does not prevent the Postal Service from attaching a different meaning to that term for internal administrative or other purposes.

comments, state the deadline for filing comments, and identify the address to which comments should be sent. If the Postal Service makes a final determination to close or consolidate a post office, it must notify patrons of the post office and make the final determination prominently available at the post office. Patrons must be informed that a person served by the post office may appeal to the Postal Regulatory Commission within 30 days of the availability of the final determination. For customers of suspended post offices, notice must be given by First-Class Mail.

Sections 3025.10 through 3025.14 replace § 3001.111. Section 3025.10 states that an appeal can be initiated simply by notifying the Commission in writing. Any such notification that includes the name and address of petitioner, the name or location of the post office, and that petitioner is served by the post office will be treated as a Petition for Review. The latter is a statutory requirement.

Section 3025.11 explains how to send an appeal to the Commission—either by mail or by filing electronically.

Section 3025.12 states that multiple appeals of the same closing or consolidation will be merged into a single docket.

Section 3025.13 sets out deadlines for filing appeals.

Section 3025.14 allows for comments from other interested parties. Persons submitting comments must either be served by the office to be closed or consolidated or have a demonstrable interest in the closing or consolidation.

Section 3025.20 describes the record created by the Postal Service that the Commission reviews. It also provides that participants in an appeal may dispute factual matters or conclusions drawn in the record, and that the Commission may take official notice of facts (*e.g.,* census data) that might be judicially noticed by the courts of the United States, or of any other matter within the general knowledge of the Commission as an expert agency.

Section 3025.21 requires the Postal Service to file the administrative record within 10 days of the posting of a petition for review on the Commission's Web site. This section also requires the Postal Service to notify participants who do not use filing online when the administrative record is filed. Notification is by First-Class Mail.

Section 3025.22 provides that all filings, including the administrative record, related to an appeal are to be available for public inspection at the post office whose closing or consolidation is under review. If the post office has been suspended or closed, the filings are to be available at the nearest open post office.

Section 3025.30 suspends the closure or consolidation of a post office until the appeal is resolved.

Section 3025.40 describes how PRC Form 61 serves as a means for petitioners and other participants to submit their views to the Commission. This section also describes the instructions to be included with the form.

Section 3025.41 provides that petitioner's statement or brief (and the statements or briefs of participants supporting petitioner) are due 20 days after the filing of the administrative record.

Section 3025.42 provides that the Postal Service's statement or brief (and the statements or briefs of participants supporting the Postal Service) are due 14 days after the date the filing of petitioner's statement or brief.

Section 3025.43 provides that petitioner, and participants supporting petitioner, may file a reply to the Postal Service's response within 7 days of the date the response is filed. This section limits replies to issues discussed in the Postal Service response.

VIII. Conclusion

The Commission seeks comments on its proposed rules applicable to appeals of Postal Service determinations to close or consolidate post offices.

It Is Ordered:

1. Comments on proposed part 3025 of chapter III of title 39, Code of Federal Regulations, are due October 3, 2011.

2. The Commission designates Richard A. Oliver to represent the interests of the general public in this proceeding.

3. The Secretary shall arrange for publication of this notice in the **Federal Register.**

By the Commission.

Shoshana M. Grove,

Secretary.

List of Subjects

Part 3001

Administrative practice and procedure; Freedom of information; Postal Service; Sunshine Act.

Part 3025

Administrative practice and procedure; Postal Service.

For the reasons discussed in the preamble, the Postal Regulatory Commission proposes to amend chapter III of title 39 of the Code of Federal Regulations as follows.

PART 3001—[Amended]

1. The authority citation for part 3001 continues to read as follows:

Authority: 39 U.S.C. 404(d); 503; 504; 3661.

Subpart A—Rules of General Applicability

2. In § 3001.9, revise paragraph (a) to read as follows:

Subpart A—Rules of General Applicability

* * * * *

§ 3001.9 Filing of documents.

(a) Filing with the Commission. The filing of each written document required or authorized by these rules or any applicable statute, rule, regulation, or order of the Commission, or by direction of the presiding officer, shall be made using the Internet (Filing Online) pursuant to § 3001.10(a) at the Commission's Web site (*http://www.prc.gov*), unless a waiver is obtained. If a waiver is obtained, a hardcopy document may be filed either by mailing or by hand delivery to the Office of the Secretary, Postal Regulatory Commission, 901 New York Ave., NW., Suite 200, Washington, DC 20268–0001 during regular business hours on a date no later than that specified for such filing. The requirements of this section do not apply to participants other than the Postal Service in proceedings conducted pursuant to part 3025 of this chapter.

* * * * *

3. In § 3001.10, add paragraph (d) to read as follows:

§ 3001.10 Form and number of copies of documents.

* * * * *

(d) Exception for appeals of post office closings and consolidations. The requirements of this section do not apply to participants other than the Postal Service in proceedings conducted pursuant to part 3025 of this chapter.

4. In § 3001.12, add new paragraph (a)(3) to read as follows:

§ 3001.12 Service of documents.

(a) * * *

(3). In proceedings conducted pursuant to part 3025 of this chapter, the Secretary will serve documents (except an administrative record) on participants who do not use Filing Online. Service will be by First-Class Mail.

* * * * *

5. In § 3001.17, revise paragraph (b) to read as follows:

§ 3001.17 Notice of proceeding.

* * * * *

(b) *Appellate proceedings under 39 U.S.C. 404(d).*

The Commission shall issue a notice of proceeding to be determined on a record compiled by the Postal Service whenever:

(1) An appeal of a determination to close or consolidate a post office is taken to the Postal Regulatory Commission pursuant to part 3025 of this chapter; or

(2) An application to suspend the effective date of a determination of the Postal Service to close or consolidate a post office pending appeal to the Postal Regulatory Commission is made pursuant to part 3025 of this chapter.

* * * * *

Subpart H—[Removed]

5. Subpart H consisting of §§ 3001.10 through 3001.117, is removed.

6. Add Part 3025, to read as follows:

PART 3025—RULES FOR APPEALS OF POSTAL SERVICE DETERMINATIONS TO CLOSE OR CONSOLIDATE POST OFFICES

Sec.

3025.1 Definitions.
3025.2 Applicability.
3025.3 Notice by the Postal Service.
3025.10 Starting an appeal.
3025.11 Transmitting an appeal.
3025.12 Duplicate appeals.
3025.13 Deadlines for appeals.
3025.14 Participation by others.
3025.20 The record on review.
3025.21 Filing of the administrative record.
3025.22 Making documents available for inspection by the public.
3025.30 Suspension pending review.
3025.40 Participant statement.
3025.41 Due date for participant statement.
3025.42 Due date for Postal Service response.
3025.43 Due date for replies to the Postal Service.

Authority: 39 U.S.C. 404(d).

§ 3025.1 Definitions.

The following definitions apply in this part:

(a) *Final determination* means the written determination and findings required by 39 U.S.C. 404(d)(3).

(b) *Administrative record* means all documents and materials created by the Postal Service or made available by the public to the Postal Service for its review in anticipation of the action for which review is sought.

(c) *Petitioner* means a person who files a document that the Commission accepts as an appeal of a post office closing or consolidation.

(d) *Post office* means a Postal Service-operated retail facility.

(e) *Relocate* means that the location of a post office within a community changes, but the total number of post offices within the community remains the same or increases.

§ 3025.2 Applicability.

(a) The rules in this part apply when:

(1) The Postal Service decides to close or consolidate a post office, and

(2) A patron of that post office wants to appeal the closing or consolidation.

(b) The following sections in part 3001, subpart A of this chapter apply to appeals of post office closings or consolidations: §§ 3001.1 through 3001.9 of this chapter, §§ 3001.11 through 3001.17 of this chapter, and §§ 3001.20 through 3001.22 of this chapter.

(c) This part does not apply when the Postal Service relocates a post office within a community.

§ 3025.3 Notice by the Postal Service.

(a) *Notice of proposal to close or consolidate a post office.* If the Postal Service proposes to close or consolidate a post office, it must give persons served by that post office notice of its intent to close or consolidate. This notice must be adequate to reasonably inform patrons that they may comment on the proposed closing or consolidation, how and where the comments may be submitted, and when the comments are due.

(b) *Notice of final determination to close or consolidate a post office.* When the Postal Service makes a final determination to close or consolidate a post office, it must give notice to persons served by that post office. The notice must be adequate to reasonably inform them that they may file an appeal with the Postal Regulatory Commission (*http://www.prc.gov*) within 30 days of the final determination's being made. Notice must be prominently displayed at the post office to be closed or consolidated and at the facility(ies) expected to provide replacement service.

(c) *Notice of suspension.* If a post office to be closed or consolidated is suspended, the Postal Service must notify patrons (both delivery and retail) by First-Class Mail of both the proposal to close or consolidate and the final determination.

§ 3025.10 Starting an appeal.

(a) A Postal Service decision to close or consolidate a post office may be appealed by a person served by that office. An appeal is begun by notifying the Postal Regulatory Commission in writing. Such a notification is known as a Petition for Review.

(b) The Petition for Review must state that the person(s) submitting it is/are served by the post office that the Postal Service has decided to close or consolidate. The petition should include the name(s) and address(es) of the person(s) filing it and the name or location of the post office to be closed. A petitioner may include other information deemed pertinent.

§ 3025.11 Transmitting an appeal.

A Petition for Review may be sent by mail or electronically through the Commission's Web site, *http://www.prc.gov.* Petitions for review may also be brought to the Commission's offices at 901 New York Avenue, NW., Suite 200, Washington, DC 20268–0001.

§ 3025.12 Duplicate appeals.

If the Commission receives more than one Petition for Review of the same post office closing or consolidation, the petitions will be considered in a single docket.

§ 3025.13 Deadlines for appeals.

(a) *In general.* If the Postal Service has issued a final determination to close or consolidate a post office, an appeal is due within 30 days of the final determination's being made available in conformance with § 3025.3(b).

(b) *Appeals sent by mail.* If sent by mail, a Petition for Review must be postmarked no later than 30 days after the final determination has been made available.

(c) *Appeals sent by other physical delivery.* If sent by some other form of physical delivery, a Petition for Review must be received in the Commission's Docket Section no later than 4:30 p.m. on the 30th day after the final determination has been made available.

(d) *Appeals sent electronically.* If submitted electronically, a Petition for Review must be received in the Commission's Docket Section no later than 4:30 p.m. on the 30th day after the final determination has been made available.

§ 3025.14 Participation by others.

(a) Any person:

(1) Served by a post office to be closed or consolidated, or

(2) With a demonstrable interest in the closing or consolidation may participate in an appeal. A person may participate in an appeal by sending written comments to the Postal Regulatory Commission in the manner described in § 3025.11.

(b) Persons may submit comments in support of a petitioner or in support of the Postal Service in accordance with the deadlines established in this part.

Commenters may use PRC Form 61, which is available on the Commission's Web site, *http://www.prc.gov.*

§ 3025.20 The record on review.

(a) The record on review includes:

(1) The final determination;

(2) The notices to persons served by the post office to be closed or consolidated;

(3) The administrative record;

(4) All documents submitted in the appeal proceeding; and

(5) Facts of which the Commission can properly take official notice.

(b) However, a petitioner or commenter may dispute factual matters or conclusions drawn in the administrative record.

§ 3025.21 Filing of the administrative record.

The Postal Service shall file the administrative record within 10 days of the date of posting of a Petition for Review on the Commission's Web site. The Commission may alter this time for good cause. The Postal Service shall notify participants who do not file electronically of the filing of the administrative record. Such notification shall be made by First-Class Mail.

§ 3025.22 Making documents available for inspection by the public.

Copies of all filings (including the administrative record) related to an appeal shall be available for public inspection at the post office whose closure or consolidation is under review. If that post office has been suspended or closed, the filings shall be available at the nearest open post office. The Postal Service must notify all petitioners and commenters of the location(s) (other than the Commission offices) where the filings may be inspected. Such notification shall be made by First-Class Mail.

§ 3025.30 Suspension pending review.

A final determination to close or consolidate a post office is suspended until final disposition by the Commission when a person files a timely Petition for Review.

§ 3025.40 Participant statement.

(a) When a timely Petition for Review of a decision to close or consolidate a post office is filed, the Secretary shall furnish petitioner with a copy of PRC Form 61. This form is designed to inform petitioners on how to make a statement of his/her arguments in support of the petition.

(b) The instructions for Form 61 shall provide:

(1) A concise explanation of the purpose of the form;

(2) A copy of section 404(d)(2)(A) of title 39, U.S. Code; and

(3) Notification that, if petitioner prefers, he or she may file a brief in lieu of or in addition to completing PRC Form 61.

§ 3025.41 Due date for participant statement.

The statement or brief of petitioner and of any other participant supporting petitioner shall be filed not more than 20 days after the filing of the administrative record.

§ 3025.42 Due date for Postal Service response.

The statement or brief of the Postal Service and of any other participant supporting the Postal Service shall be filed not more than 14 days after the date for filing of petitioner's statement.

§ 3025.43 Due date for replies to the Postal Service.

Petitioner and any other participant supporting petitioner may file a reply to the Postal Service response not more than 7 days after the date of the Postal Service response. Replies are limited to issues discussed in the Postal Service's response.

[FR Doc. 2011–22009 Filed 8–30–11; 8:45 am]

BILLING CODE 7710–FW–P

ENVIRONMENTAL PROTECTION AGENCY

40 CFR Part 180

[EPA–HQ–OPP–2011–0702; FRL–8886–2]

Fenamiphos; Proposed Data Call-In Order for Pesticide Tolerance

AGENCY: Environmental Protection Agency (EPA).

ACTION: Proposed order.

SUMMARY: This document proposes to require the submission of various data required to support the continuation of the tolerances for the pesticide fenamiphos. Pesticide tolerances are established under the Federal Food, Drug, and Cosmetic Act (FFDCA).

DATES: Comments must be received on or before October 31, 2011.

ADDRESSES: Submit your comments, identified by docket identification (ID) number EPA–HQ–OPP–2011–0702, by one of the following methods:

- *Federal eRulemaking Portal: http://www.regulations.gov.* Follow the on-line instructions for submitting comments.
- *Mail:* Office of Pesticide Programs (OPP) Regulatory Public Docket (7502P), Environmental Protection Agency, 1200 Pennsylvania Ave., NW., Washington, DC 20460–0001.
- *Delivery:* OPP Regulatory Public Docket (7502P), Environmental Protection Agency, Rm. S–4400, One Potomac Yard (South Bldg.), 2777 S. Crystal Dr., Arlington, VA. Deliveries are only accepted during the Docket Facility's normal hours of operation (8:30 a.m. to 4 p.m., Monday through Friday, excluding legal holidays). Special arrangements should be made for deliveries of boxed information. The Docket Facility telephone number is (703) 305–5805.

Instructions: Direct your comments to docket ID number EPA–HQ–OPP–2011–0702. EPA's policy is that all comments received will be included in the docket without change and may be made available on-line at *http://www.regulations.gov,* including any personal information provided, unless the comment includes information claimed to be Confidential Business Information (CBI) or other information whose disclosure is restricted by statute. Do not submit information that you consider to be CBI or otherwise protected through *regulations.gov* or e-mail. The *regulations.gov* Web site is an ''anonymous access'' system, which means EPA will not know your identity or contact information unless you provide it in the body of your comment. If you send an e-mail comment directly to EPA without going through *regulations.gov*, your e-mail address will be automatically captured and included as part of the comment that is placed in the docket and made available on the Internet. If you submit an electronic comment, EPA recommends that you include your name and other contact information in the body of your comment and with any disk or CD–ROM you submit. If EPA cannot read your comment due to technical difficulties and cannot contact you for clarification, EPA may not be able to consider your comment. Electronic files should avoid the use of special characters, any form of encryption, and be free of any defects or viruses.

Docket: All documents in the docket are listed in the docket index available at *http://www.regulations.gov.* Although listed in the index, some information is not publicly available, e.g., CBI or other information whose disclosure is restricted by statute. Certain other material, such as copyrighted material, is not placed on the Internet and will be publicly available only in hard copy form. Publicly available docket materials are available either in the electronic docket at *http://www.regulations.gov,* or, if only available in hard copy, at the OPP Regulatory Public Docket in Rm. S–4400, One Potomac Yard (South Bldg.),

2777 S. Crystal Dr., Arlington, VA. The hours of operation of this Docket Facility are from 8:30 a.m. to 4 p.m., Monday through Friday, excluding legal holidays. The Docket Facility telephone number is (703) 305–5805.

FOR FURTHER INFORMATION CONTACT: Eric Miederhoff, Pesticide Re-evaluation Division (7508P), Office of Pesticide Programs, Environmental Protection Agency, 1200 Pennsylvania Ave, NW., Washington, DC 20460–0001; telephone number: (703) 347–8028; e-mail address: *miederhoff.eric@epa.gov.*

SUPPLEMENTARY INFORMATION:

I. General Information

A. Does this action apply to me?

You may be potentially affected by this action if you are an agricultural producer, food manufacturer, or pesticide manufacturer. Potentially affected entities may include, but are not limited to:

- Crop production (NAICS code 111).
- Animal production (NAICS code 112).
- Food manufacturing (NAICS code 311).
- Pesticide manufacturing (NAICS code 32532).

This listing is not intended to be exhaustive, but rather provides a guide for readers regarding entities likely to be affected by this action. Other types of entities not listed in this unit could also be affected. The North American Industrial Classification System (NAICS) codes have been provided to assist you and others in determining whether this action might apply to certain entities. If you have any questions regarding the applicability of this action to a particular entity, consult the person listed under **FOR FURTHER INFORMATION CONTACT**.

B. What should I consider as I prepare my comments for EPA?

1. *Submitting CBI.* Do not submit this information to EPA through *regulations.gov* or e-mail. Clearly mark the part or all of the information that you claim to be CBI. For CBI information in a disk or CD–ROM that you mail to EPA, mark the outside of the disk or CD–ROM as CBI and then identify electronically within the disk or CD–ROM the specific information that is claimed as CBI. In addition to one complete version of the comment that includes information claimed as CBI, a copy of the comment that does not contain the information claimed as CBI must be submitted for inclusion in the public docket. Information so marked will not be disclosed except in accordance with procedures set forth in 40 CFR part 2.

2. *Tips for preparing your comments.* When submitting comments, remember to:

i. Identify the document by docket ID number and other identifying information (subject heading, **Federal Register** date and page number).

ii. Follow directions. The Agency may ask you to respond to specific questions or organize comments by referencing a Code of Federal Regulations (CFR) part or section number.

iii. Explain why you agree or disagree; suggest alternatives and substitute language for your requested changes.

iv. Describe any assumptions and provide any technical information and/or data that you used.

v. If you estimate potential costs or burdens, explain how you arrived at your estimate in sufficient detail to allow for it to be reproduced.

vi. Provide specific examples to illustrate your concerns and suggest alternatives.

vii. Explain your views as clearly as possible, avoiding the use of profanity or personal threats.

viii. Make sure to submit your comments by the comment period deadline identified.

II. FFDCA Data Call-In Authority

In this document, EPA proposes to issue an order requiring the submission of various data to support the continuation of the fenamiphos tolerances at 40 CFR 180.349. Under section 408(f) of FFDCA, 21 U.S.C. 346a(f), EPA is authorized to require, by order, submission of data ''reasonably required to support the continuation of a tolerance'' when such data cannot be obtained under the Data Call-In authority of section 3(c)(2)(B) of the Federal Insecticide, Fungicide, and Rodenticide Act (''FIFRA''), 7 U.S.C. 136a(c)(2)(B), or section 4 of the Toxic Substances Control Act (''TSCA''), 15 U.S.C. 2603. A section 408(f) Data Call-In order may only be issued following notice and a comment period of not less than 60 days.

A section 408(f) Data Call-In order must contain the following elements:

- A requirement that one or more persons submit to EPA a notice identifying the person(s) who commit(s) to submit the data required in the order;
- A description of the required data and the required reports connected to such data;
- An explanation of why the required data could not be obtained under section 3(c)(2)(B) of FIFRA or section 4 of TSCA; and
- The required submission date for the notice identifying one or more interested persons who commit to submit the required data and the required submission dates for all the data and reports required in the order. (21 U.S.C. 346a(f)(1)(C)).

EPA may by order modify or revoke the affected tolerances if any one of the following submissions is not made in a timely manner:

- A notice identifying the one or more interested persons who commit to submit the data;
- The data itself; or
- The reports required under a section 408(f) order are not submitted by the date specified in the order. (21 U.S.C. 346a(f)(2)).

III. Regulatory Background for Fenamiphos

Fenamiphos is an organophosphate nematicide/insecticide. It is not currently registered under FIFRA. Fenamiphos' last FIFRA registration was canceled in 2007. However, four FFDCA tolerances remain for residues of fenamiphos on the following commodities: Pineapples, grapes, raisins, and bananas (40 CFR 180.349). Since there are currently no domestic registrations for fenamiphos, these tolerances are referred to as ''import tolerances.''

Fenamiphos is a member of a family of pesticides known as the organophosphates. EPA has concluded fenamiphos and other organophosphate pesticides share a common mechanism of toxicity. As with other organophosphates, the principal toxic effects induced by fenamiphos are related to its cholinesterase-inhibiting activity. In animal laboratory studies, it produces the associated clinical signs such as tremors, unsteady gait, decreased activity, salivation, and disturbed balance in rats and rabbits, and decreased cholinesterase activity (plasma, brain) in rats and rabbits following acute, subchronic, and chronic oral exposure.

In February 2002, EPA issued an Interim Reregistration Eligibility Decision (IRED) for fenamiphos. The IRED evaluated the potential human health and ecological risks associated with all registered uses of fenamiphos. In connection with its obligation under the Food Quality Protection Act of 1996 (FQPA), the Agency also evaluated whether all fenamiphos tolerances in existence at the time of the passage of FQPA met the revised safety standard that the FQPA adopted for FFDCA section 408. In the IRED, EPA concluded that the risks of fenamiphos when evaluated in isolation from other organophosphates met the revised safety standard in FFDCA section 408. This

conclusion was labeled ''interim,'' however, because EPA had not yet completed a cumulative risk assessment for the organophosphates. In July 2006, EPA completed its cumulative risk assessment for the organophosphate pesticides finding that these tolerances met the revised safety standard.

In June 2010, in response to a registrant's interest in supporting tolerances for import purposes, the Agency completed a revised human health risk assessment for fenamiphos. As there are no domestic registrations for fenamiphos products, the assessment was limited to an evaluation of the potential dietary risk from exposure to fenamiphos residues in imported food commodities. This assessment utilized updated risk assessment methodologies from those that were used for the IRED's dietary assessment. The 2010 assessment concluded that potential exposure to fenamiphos residues in or on imported food commodities exceeds the Agency's level of concern.

The 2010 assessment identified several studies that were needed to verify the accuracy of the assumptions used in the Agency's evaluation of dietary exposure to imported commodities treated with fenamiphos or that were needed to meet a new data requirement. The necessary data include: A comparative chlolinesterase assay, residue data for grape, and an immunotoxicity study. These data requirements are discussed in detail in Unit IV.

Under section 3(g) of FIFRA and implementing regulations, EPA has established a review program for pesticides registered under FIFRA. The goal of that program is for there to be a periodic review of pesticide registrations every 15 years to ensure that the registrations satisfy FIFRA standards and are based on ''current scientific and other knowledge regarding the pesticide.'' (40 CFR 155.40(a)). EPA is in the preliminary stages of the registration review process for organophosphate pesticides. Although fenamiphos is not registered under FIFRA, EPA will be reexamining fenamiphos with the other registered organophosphates because of the organophosphates' shared mechanism of toxicity.

IV. Data Requirements

A. Required Data and Reports

Pursuant to FFDCA section 408(f), EPA has determined that additional data are reasonably required to support the continuation of the import tolerances for fenamiphos which are codified at 40 CFR 180.349. These data cannot be obtained under FIFRA section 3(c)(2)(B) because fenamiphos is not registered under FIFRA, and the data call-in authority under that section only extends to registered pesticides. These data cannot be obtained under TSCA because pesticides are excluded from coverage under that statute. 15 U.S.C. 2602(2)(B)(ii).

Accordingly, EPA proposes to issue a final order requiring the submission of the following data:

1. *Comparative Cholinesterase Assay (870.6300).* A protocol and a final report are required.

Rationale: As an organophosphate pesticide (OP), inhibition of acetylcholinesterase (AChE) is the critical effect for use in human health risk assessment. Many OPs were subject to a Data Call-In for the developmental neurotoxicity study (DNT). This Data Call-In also included the requirement for AChE inhibition data to evaluate comparative sensitivity in juvenile and adult rats. These data are most often collected in a study called the comparative cholinesterase assay (CCA). Since that time, CCA studies for more than 20 OPs have been submitted. Although for some OPs no difference in sensitivity has been observed in juvenile and adult animals, for many of the OPs, juveniles have been shown to be more sensitive. At this time, OPP has determined that a CCA is required for fenamiphos to evaluate the potential for increased sensitivity in juvenile animals compared with that of adult animals. Given that the AChE data provided in the CCAs have provided more sensitive results than DNT studies for the OPs, a DNT study for fenamiphos is not required at this time.

2. *Immunotoxicity study (870.7800).* A final report and protocol are required.

Rationale: This is a new data requirement under 40 CFR part 158 as a part of the data requirements for registration of a pesticide (food and non-food uses) and for establishment of a tolerance.

The Immunotoxicity Test Guideline (OPPTS 870.7800) prescribes functional immunotoxicity testing and is designed to evaluate the potential of a repeated chemical exposure to produce adverse effects (*i.e.,* suppression) on the immune system. Immunosuppression is a deficit in the ability of the immune system to respond to a challenge of bacterial or viral infections such as tuberculosis (TB), Severe Acquired Respiratory Syndrome (SARS), or neoplasia. An immunotoxicity study for fenamiphos has not been submitted.

3. *Crop field trials—grapes* (860.1500). A final report is required.

Rationale: Field trials are required for each commodity/commodity group under 40 CFR part 158. These data are used to establish the legal maximum residue that may remain on food and to assess the risk posed by the pesticide residue. While residue data for fenamiphos use on grape is adequate to support several application methods, the Agency has not received data to support the current foliar use of fenamiphos on grape in Mexico.

EPA guidelines recommend that crop field trials be designed to take into account where the crop is grown and how much of the crop is grown. Field trials are required for each type of formulation because the formulation can have a significant effect on the magnitude of the pesticide residue left on the crop. Residue trials also need to represent the maximum application rate on the label and have a geographic distribution representative of the commodity/commodity group. On June 1, 2000 (65 FR 35069) (FRL–6559–3), EPA published in the **Federal Register** a Notice which provided detailed guidance on applying current U.S. data requirements for the establishment or continuance of tolerances for pesticide residues in or on imported foods. A copy of that Notice is available in the docket of this proposed order. That Notice contains instructions for determining the number and location of field trials.

B. Persons Who Commit To Submit the Required Data

After the 60-day comment period closes, the Agency will respond to comments, if appropriate, and may issue a final order requiring the submission of various data for fenamiphos in the **Federal Register**. If EPA issues such an order, persons who are interested in the continuation of the fenamiphos tolerances must notify the Agency by completing and submitting the required ''Section 408(f) Order Response'' form (available in the docket) within 90 days after publication of the final Order in the **Federal Register**.

The ''Section 408(f) Order Response Form'' requires the identification of persons who will submit the required data and lists the options available to support the required data:

1. Develop new data.
2. Submit an existing study—submit existing data not submitted previously to the Agency by anyone.
3. Upgrade a study—submit or cite data to upgrade a study classified by EPA as partially acceptable and upgradable.
4. Cite an existing study—cite an existing study that EPA classified as

acceptable or an existing study that has been submitted but not reviewed by the Agency.

C. Required Dates for Submission of Data/Reports

The following table lists the time allocated for both the completion and submission of each study. The required submission date is calculated from the date of publication in the **Federal Register** of the final order.

Guideline requirement No.	Study title	Timeframe for protocol submission	Timeframe for data submission
870.6300	Comparative Cholinesterase Assay	6 months	12 months.
870.7800	Immunotoxicity Study	6 months	12 months.
860.1500	Crop Field Trials (grapes)	Not Required	24 months.

D. Failure To Submit

If the Agency does not receive a Section 408(f) Response Form identifying a person who agrees to submit the required data within 90 days after publication of the final order in the **Federal Register**, EPA will proceed to revoke the fenamiphos tolerances at 40 CFR 180.349. Such revocation order is subject to the objection and hearing procedures in FFDCA section 408(g)(2), but the only material issue in such a procedure is whether a submission required by the order was made in a timely fashion.

Additional events that may be the basis for modification or revocation of fenamiphos tolerances include, but are not limited to, the following:

1. No person submits on the required schedule an acceptable proposal or final protocol when such is required to be submitted to the Agency for review.
2. No person submits on the required schedule an adequate progress report on a study as required by the order.
3. No person submits on the required schedule acceptable data as required by the final order.
4. No person submits supportable certifications as to the conditions of submitted data, where required by order and where no other cited or submitted study meets the data requirements the study was intended to fulfill.

V. Statutory and Executive Order Reviews

As required by statute, this proposal to require submission of data in support of tolerances is in the form of an order and not a rule. (21 U.S.C. 346a(f)(1)(C)). Under the Administrative Procedures Act, orders are expressly excluded from the definition of a rule. (5 U.S.C. 551(4)). Accordingly, the regulatory assessment requirements imposed on rulemaking do not, therefore, apply to this action.

List of Subjects in 40 CFR Part 180

Environmental protection, Administrative practice and procedure, Agricultural commodities, Pesticides and pests, Reporting and recordkeeping requirements.

Dated: August 22, 2011.

Peter Caulkins,

Acting Director, Pesticide Re-evaluation Division, Office of Pesticide Programs.

[FR Doc. 2011–22127 Filed 8–30–11; 8:45 am]

BILLING CODE 6560–50–P

FEDERAL COMMUNICATIONS COMMISSION

47 CFR Part 73

[MB Docket No. 11–137, RM–11637; DA 11–1414]

Television Broadcasting Services; Montgomery, AL

AGENCY: Federal Communications Commission.

ACTION: Proposed rule.

SUMMARY: The Commission has before it a petition for rulemaking filed by Channel 32 Montgomery, LLC (''Channel 32''), the licensee of WNCF(TV), channel 32, Montgomery, Alabama, requesting the substitution of channel 31 for channel 32 at Montgomery. Channel 32 believes operating on channel 31 would offer more meaningful replication of the station's former analog service area, and would significantly increase the geographic area within the station's protected contour.

DATES: Comments must be filed on or before September 30, 2011, and reply comments on or before October 17, 2011.

ADDRESSES: Federal Communications Commission, Office of the Secretary, 445 12th Street, SW., Washington, DC 20554. In addition to filing comments with the FCC, interested parties should serve counsel for petitioner as follows: Louis Wall, Channel 32 Montgomery, LLC, 525 Blackburn Drive, Augusta, Georgia 30907.

FOR FURTHER INFORMATION CONTACT: Joyce L. Bernstein, *joyce.bernstein@fcc.gov*, Media Bureau, (202) 418–1647.

SUPPLEMENTARY INFORMATION: This is a synopsis of the Commission's Notice of Proposed Rulemaking, MB Docket No. 11–100, adopted June 9, 2011, and released June 10, 2011. The full text of this document is available for public inspection and copying during normal business hours in the FCC's Reference Information Center at Portals II, CY–A257, 445 12th Street, SW., Washington, DC 20554. This document will also be available via ECFS (*http://www.fcc.gov/cgb/ecfs/*). (Documents will be available electronically in ASCII, Word 97, and/or Adobe Acrobat.) This document may be purchased from the Commission's duplicating contractor, Best Copy and Printing, Inc., 445 12th Street, SW., Room CY–B402, Washington, DC 20554, telephone 1–800–478–3160 or via e-mail *http://www.BCPIWEB.com.* To request this document in accessible formats (computer diskettes, large print, audio recording, and Braille), send an e-mail to *fcc504@fcc.gov* or call the Commission's Consumer and Governmental Affairs Bureau at (202) 418–0530 (voice), (202) 418–0432 (TTY). This document does not contain proposed information collection requirements subject to the Paperwork Reduction Act of 1995, Public Law 104–13. In addition, therefore, it does not contain any proposed information collection burden ''for small business concerns with fewer than 25 employees,'' pursuant to the Small Business Paperwork Relief Act of 2002, Public Law 107–198, *see* 44 U.S.C. 3506(c)(4).

Provisions of the Regulatory Flexibility Act of 1980 do not apply to this proceeding. Members of the public should note that from the time a Notice of Proposed Rulemaking is issued until the matter is no longer subject to Commission consideration or court review, all *ex parte* contacts (other than *ex parte* presentations exempt under 47 CFR 1.1204(a)) are prohibited in Commission proceedings, such as this one, which involve channel allotments. See 47 CFR 1.1208 for rules governing restricted proceedings.

For information regarding proper filing procedures for comments, see 47 CFR 1.415 and 1.420.

List of Subjects in 47 CFR Part 73

Television, Television broadcasting.

Federal Communications Commission.

Barbara A. Kreisman,

Chief, Video Division, Media Bureau.

Proposed Rules

For the reasons discussed in the preamble, the Federal Communications Commission proposes to amend 47 CFR part 73 as follows:

PART 73—RADIO BROADCAST SERVICES

1. The authority citation for part 73 continues to read as follows:

Authority: 47 U.S.C. 154, 303, 334, 336, and 339.

§ 73.622(i) [Amended]

2. Amend § 73.622(i), the Post-Transition Table of DTV Allotments, by removing 32 under Alabama and adding channel 31 at Montgomery.

[FR Doc. 2011–22296 Filed 8–30–11; 8:45 am]

BILLING CODE 6712–01–P

FEDERAL COMMUNICATIONS COMMISSION

47 CFR Part 73

[MB Docket No. 11–139, RM–11636; DA 11–1401]

Television Broadcasting Services; Hampton-Norfolk, Virginia; Norfolk, Virginia-Elizabeth City, NC

AGENCY: Federal Communications Commission.

ACTION: Proposed rule.

SUMMARY: The Commission has before it a petition for rulemaking filed by Hampton Roads Educational Telecommunications Association (''HRETA''), the licensee of noncommercial educational television station WHRO–TV, channel *16, Hampton-Norfolk, Virginia, requesting the reallotment of its channel *16 to Norfolk, Virginia-Elizabeth City, North Carolina, as Elizabeth City's first local TV service. HRETA also requests modification of station WHRO–TV's license to specify Norfolk, Virginia-Elizabeth City, North Carolina as its community of license. There is presently a freeze on the filing of television allotment rulemaking petitions, but since HRETA'S proposal contemplates no changes in the technical specifications of WHRO–TV, a grant of its request for a waiver of the freeze will not undermine the underlying purpose of the freeze. Waiving the freeze will serve the public interest by moving forth with HRETA's proposal to change its community of license to provide Elizabeth City with its first television broadcast station.

DATES: Comments must be filed on or before September 30, 2011, and reply comments on or before October 17, 2011.

ADDRESSES: Federal Communications Commission, Office of the Secretary, 445 12th Street, SW., Washington, DC 20554. In addition to filing comments with the FCC, interested parties should serve counsel for petitioner as follows: Lauren A. Colby, *Esq.*, 10 E. Fourth Street, P.O. Box 113, Frederick, Maryland 21701.

FOR FURTHER INFORMATION CONTACT: Joyce L. Bernstein, *joyce.bernstein@fcc.gov,* Media Bureau, (202) 418–1600.

SUPPLEMENTARY INFORMATION: This is a synopsis of the Commission's Notice of Proposed Rule Making, MB Docket No. 11–139, adopted August 15, 2011, and released August 17, 2011. The full text of this document is available for public inspection and copying during normal business hours in the FCC's Reference Information Center at Portals II, CY–A257, 445 12th Street, SW., Washington, DC 20554. This document will also be available via ECFS (*http://www.fcc.gov/cgb/ecfs/*). (Documents will be available electronically in ASCII, Word 97, and/or Adobe Acrobat.) This document may be purchased from the Commission's duplicating contractor, Best Copy and Printing, Inc., 445 12th Street, SW., Room CY–B402, Washington, DC 20554, telephone 1–800–478–3160 or via e-mail *http://www.BCPIWEB.com.* To request this document in accessible formats (computer diskettes, large print, audio recording, and Braille), send an e-mail to *fcc504@fcc.gov* or call the Commission's Consumer and Governmental Affairs Bureau at (202) 418–0530 (voice), (202) 418–0432 (TTY). This document does not contain proposed information collection requirements subject to the Paperwork Reduction Act of 1995, Public Law 104–13. In addition, therefore, it does not contain any proposed information collection burden ''for small business concerns with fewer than 25 employees,'' pursuant to the Small Business Paperwork Relief Act of 2002, Public Law 107–198, *see* 44 U.S.C. 3506(c)(4).

Provisions of the Regulatory Flexibility Act of 1980 do not apply to this proceeding. Members of the public should note that from the time a Notice of Proposed Rule Making is issued until the matter is no longer subject to Commission consideration or court review, all *ex parte* contacts (other than *ex parte* presentations exempt under 47 CFR 1.1204(a)) are prohibited in Commission proceedings, such as this one, which involve channel allotments. See 47 CFR 1.1208 for rules governing restricted proceedings.

For information regarding proper filing procedures for comments, see 47 CFR 1.415 and 1.420.

List of Subjects in 47 CFR Part 73

Television, Television broadcasting.

Federal Communications Commission.

Barbara A. Kreisman,

Chief, Video Division, Media Bureau.

Proposed Rules

For the reasons discussed in the preamble, the Federal Communications Commission proposes to amend 47 CFR part 73 as follows:

PART 73—RADIO BROADCAST SERVICES

1. The authority citation for part 73 continues to read as follows:

Authority: 47 U.S.C. 154, 303, 334, 336, and 339.

§ 73.622(i) [Amended]

2. Amend § 73.622(i), the Post-Transition Table of DTV Allotments, by adding Channel *16 at Elizabeth City under North Carolina, deleting Channel *16 at Hampton-Norfolk under Virginia, and adding Channel *16 at Norfolk.

[FR Doc. 2011–22200 Filed 8–30–11; 8:45 am]

BILLING CODE 6712–01–P

Notices

Federal Register

Vol. 76, No. 169

Wednesday, August 31, 2011

This section of the FEDERAL REGISTER contains documents other than rules or proposed rules that are applicable to the public. Notices of hearings and investigations, committee meetings, agency decisions and rulings, delegations of authority, filing of petitions and applications and agency statements of organization and functions are examples of documents appearing in this section.

DEPARTMENT OF AGRICULTURE

Proposed Privacy Act System of Records

AGENCY: Office of the Chief Information Officer (OCIO), Departmental Management (DM).

ACTION: Notice of Proposed Privacy Act System of Records.

SUMMARY: In accordance with the requirements of the Privacy Act of 1974, as amended, the U.S. Department of Agriculture (USDA), OCIO gives notice of a new Privacy Act System of Records.

DATES: This notice will be effective without further notice on October 31, 2011 unless modified by a subsequent notice to incorporate comments received from the public. Written or electronic comments must be received by the contact person listed below on or before September 30, 2011 to be assured consideration.

ADDRESSES: You may submit written or electronic comments on this notice by any of the following methods:

- *Federal eRulemaking Portal: http://www.regulations.gov.* Follow the online instructions for submitting comments.
- *Mail:* Phyllis Holmes, Compliance Officer, DM, USDA, 1400 Independence Avenue, Room 2916, SW., Washington, DC 20250.
- *E-mail: Phyllis.Holmes@dm.usda.gov.*
- *Fax:* (202) 720–0105.

All comments will become a matter of public record and should be identified as ''FOIAXpress System of Records Comments,'' making reference to the date and page number of this issue of the **Federal Register**. Comments will be available for public inspection in the above office during regular business hours (7 CFR 1.27(b)). Please call Phyllis Holmes at (202) 720–0068 to make an appointment to read comments.

FOR FURTHER INFORMATION CONTACT: Phyllis Holmes, Compliance Officer, DM, USDA, at (202) 720–0068.

SUPPLEMENTARY INFORMATION: The Freedom of Information Act (FOIA), 5 U.S.C. 552, was enacted in 1966 and gives any person the right to request access to almost any Federal agency record, except those protected from disclosure by legal exemptions and exclusions (*e.g.,* classified national security, business proprietary, personal privacy, and investigative documents). The public may submit a FOIA request to USDA by sending a written request for the records directly to the USDA component responsible for the records sought. In addition, the Privacy Act, 5 U.S.C. 552a, provides individuals with certain rights to request and amend information maintained by USDA about them. In addition, the Privacy Act restricts USDA's ability to disclose certain information about individuals maintained in an agency Privacy Act System of Records. Individuals may submit Privacy Act requests to USDA in writing in accordance with USDA Privacy Act procedures.

In March, 2009, Attorney General Eric Holder issued comprehensive new FOIA guidelines. In addition to establishing criteria governing the presumption of disclosure, the Attorney General's FOIA guidelines emphasized that agencies must have effective systems in place for responding to FOIA requests. In response, the USDA Freedom of Information Act Express (FX) Project was undertaken to increase openness with the public and to address the current lack of standardized reporting and tracking of USDA's FOIA data and information requests. Currently, USDA's FOIA program is decentralized, with each mission area and agency managing its respective FOIA programs. At the end of each year, each agency must collect and report the appropriate data for the FOIA Annual Report. Currently the annual reporting process is manual and time consuming.

The purpose of the USDA FX system is to transform the USDA FOIA management experience from a manual task to an efficient business process across the enterprise. This technology implementation will allow for real-time tracking, management, centralized oversight, and quality control across the USDA FOIA program. With FX, USDA agencies anticipate a more efficient process, resulting in quicker responses to requests for information. In addition, the process of capturing, collating, and calculating values for the Annual Report will be enhanced and fully automated. As a result, the USDA FOIA program will be streamlined. The USDA FOIA Officer will be able to maintain a real time snapshot of the activities of every agency at any given time.

Signed at Washington, DC, on August 19, 2011.

Pearlie S. Reed,

Assistant Secretary of Agriculture for Administration.

SYSTEM NAME:

Freedom of Information Act Express (FX).

SECURITY CLASSIFICATION:

None.

SYSTEM LOCATION:

The records in this system are collected in a Web-based system located on servers in Gaithersburg, Maryland. The system is an enterprise solution that operates through USDA. A list of USDA FOIA servicing centers can be found at *http://www.dm.usda.gov/foia_public_liaisons.htm.* FX will be used by FOIA servicing centers and staff offices responsible for processing FOIA and Privacy Act requests throughout USDA.

CATEGORIES OF INDIVIDUALS COVERED BY THE SYSTEM:

Individuals covered by this system of records include: individuals who submit FOIA requests, FOIA appeals, and Privacy Act requests and appeals to USDA; individuals whose requests, appeals, and/or records have been referred to USDA by other agencies; attorneys or other persons representing individuals submitting such requests and appeals or litigation; individuals who are the subjects of such requests; and government personnel assigned to handle such requests or appeals.

CATEGORIES OF RECORDS IN THE SYSTEM:

Categories of records in this system may include the following records received, created, or compiled in processing FOIA and Privacy Act requests or appeals: Original requests and administrative appeals; documents relating to payment of FOIA fees; correspondence between the agency and the FOIA or Privacy Act requester; and internal agency records relating to the processing of FOIA and Privacy Act requests and appeals. In some cases, the

records responsive to the request may be included in the database.

Types of information in the records may include requesters' and their attorneys' or representatives' names, addresses, e-mail addresses, telephone numbers, and FOIA case numbers; office telephone numbers, and office routing symbols of USDA employees and contractors; names, telephone numbers, and addresses of the submitter of the information requested; and unique case identifier or other identifier assigned to the request or appeal.

AUTHORITY FOR MAINTENANCE OF THE SYSTEM:

FOIA Act, 5 U.S.C. 552, As Amended By Public Law No. 104–231, 110 Stat. 3048 and the Privacy Act of 1974, 5 U.S.C. 552a Section (e)(4)(A).

PURPOSE(S):

The purpose of this system of records is to permit the USDA's OCIO to administer and manage FOIA requests. The system will also assist the FOIA Officials at the USDA agencies to process and track FOIA requests for records. Currently, USDA agencies utilize multiple manual and office suite products to track, respond to, and close out FOIA requests. The OCIO, in an effort to streamline the FOIA process, is implementing a solution, FX, that will allow USDA to enter, view, update, process, and track real time FOIA requests received. FX will allow the public to submit FOIA requests online utilizing FX's Public Access Link (PAL). PAL is a Web front-end portal that will allow requestors the opportunity to send, and see in real time, the status of their FOIA request. Individuals wishing to use PAL, when available, will be required to establish a USDA e-authentication account. This system of records will have several routine uses to enable USDA to comply with the FOIA, 5 U.S.C. 552, as amended by Public Law No. 104–231, 110 Stat. 3048, and the Privacy Act of 1974, 5 U.S.C. 552a Section (e)(4)(A).

ROUTINE USES OF RECORDS MAINTAINED IN THE SYSTEM INCLUDING CATEGORIES OF USERS AND PURPOSES OF SUCH USES:

These records may be disclosed:

A. To the Department of Justice (DOJ) or other Federal agency conducting litigation or in proceedings before any court, adjudicative or administrative body, when:

1. USDA or any USDA agency;

2. Any employee of USDA in his/her official capacity;

3. Any employee of USDA in his/her individual capacity where DOJ or USDA has agreed to represent the employee; or

4. The United States or any agency thereof, is a party to the litigation or has an interest in such litigation, and USDA determines that the records are both relevant and necessary to the litigation, and the use of such records is compatible with the purpose for which USDA collected the records.

B. To a congressional office in response to an inquiry from that congressional office made at the request of the individual to whom the record pertains.

C. To the National Archives and Records Administration (NARA) or other Federal government agencies pursuant to records management inspections being conducted under the authority of 44 U.S.C. 2904 and 2906.

D. To an agency, organization, or individual for the purpose of performing audit or oversight operations as authorized by law, but only such information as is necessary and relevant to such audit or oversight function.

E. To appropriate agencies, entities, and persons when:

1. USDA suspects or has confirmed that the security or confidentiality of information in the system of records has been compromised;

2. The Department has determined that as a result of the suspected or confirmed compromise there is a risk of harm to economic or property interests, identity theft or fraud, or harm to the security or integrity of this system or other systems or programs (whether maintained by USDA or another agency or entity) that rely upon the compromised information;

3. The disclosure made to such agencies, entities, and persons is reasonably necessary to assist in connection with USDA's efforts to respond to the suspected or confirmed compromise and prevent, minimize, or remedy such harm.

F. To contractors and their agents, grantees, experts, consultants, and others performing or working on a contract, service, grant, cooperative agreement, or other assignment for USDA, when necessary to accomplish an agency function related to this system of records. Individuals provided information under this routine use are subject to the same Privacy Act requirements and limitations on disclosure as are applicable to USDA officers and employees.

G. To an appropriate Federal, State, Tribal, local, international, or foreign law enforcement agency or other appropriate authority charged with investigating or prosecuting a violation or enforcing or implementing a law, rule, regulation, or order, where a record, either on its face or in conjunction with other information, indicates a violation or potential violation of law, which includes criminal, civil, or regulatory violations, and such disclosure is proper and consistent with the official duties of the person making the disclosure.

H. When a record on its face, or in conjunction with other records, indicates a violation or potential violation of law, whether civil, criminal, or regulatory in nature, and whether arising by general statute or particular program statute, or by regulation, rule, or order issued pursuant thereto, disclosure may be made to the appropriate public authority, whether Federal, foreign, State, local, or Tribal, or otherwise, responsible for enforcing, investigating or prosecuting such violation or charged with enforcing or implementing the statute, or rule, regulation, or order issued pursuant thereto, if the information disclosed is relevant to any enforcement, regulatory, investigative, or prosecutorial responsibility of the receiving entity.

DISCLOSURE TO CONSUMER REPORTING AGENCIES:

None.

POLICIES AND PRACTICE FOR STORING, RETRIEVING, ACCESSING, RETAINING AND DISPOSING OF RECORDS IN THE SYSTEM STORAGE:

Electronic records are maintained on a server at a secure contractor facility within the Washington, DC, metropolitan area. Access to the system is restricted and role based. Access to information is granted only to those individuals assigned or working on a FOIA case.

RETRIEVABILITY:

Data will be indexed by first name, last name, case number, or other agency identifier.

SAFEGUARDS:

The system itself will be secured in a restricted area within USDA owned/operated computer space. Access to this space is strictly controlled using multiple physical access control security systems. This space can only be accessed by authorized personnel with the appropriate access devices. Electronic access to records is role based and controlled through a system of computer access identification and authorization utilizing passwords. Access is granted by the system administrator, and controlled by the database management system software. The system of records will not be exempt from any provisions of the Privacy Act.

RETENTION AND DISPOSAL:

Records in this system will be retained in accordance with NARA's

General Records Schedule 14, but may be retained for a longer period as required by litigation or open investigations or audits. A FOIA record deals with significant policy-making issues; it is a permanent record. A FOIA record may qualify as a permanent Federal Record. A permanent record is one that has been determined by NARA to have sufficient value to warrant its preservation in the National Archives of the United States. Permanent records include all records accessioned by NARA into the National Archives of the United States and later increments of the same records, and those for which the disposition is permanent on SF 115s, Request for Records Disposition Authority, approved by NARA on or after May 14, 1973.

SYSTEM MANAGER(S) AND ADDRESS:

The System manager for this system is the FX Program Manager. The mailing address for the USDA System Manager is 1400 Independence Ave., SW., Washington, DC 20250.

NOTIFICATION PROCEDURES:

Individuals seeking notification of and access to any record contained in this system of records, or seeking to contest its content, may submit a request in writing to the headquarters or component's FOIA Official, whose contact information can be found at *http://www.dm.usda.gov/foia.htm* under ''contacts.'' If an individual believes more than one component maintains Privacy Act records concerning him or her, the individual may submit the request to the Chief Privacy Act Officer, Department of Agriculture, 1400 Independence Avenue SW., Room 408–W, Washington, DC 20250. When seeking records about yourself from this system of records, or any other USDA system of records, your request must conform with the Privacy Act regulations set forth in 6 CFR part 5. You must first verify your identity, meaning that you must provide your full name, current address, and date and place of birth. You must sign your request, and your signature must either be notarized or submitted under 28 U.S.C. 1746, a law that permits statements to be made under penalty of perjury as a substitute for notarization. While no specific form is required, you may obtain forms for this purpose from the Chief FOIA Officer, Department of Agriculture, 1400 Independence Avenue, SW., Washington, DC 20250. In addition, you should provide the following:

- An explanation of why you believe USDA would have information on you,
- Identify which component(s) of USDA you believe may have the information about you,
- Specify when you believe the records would have been created,
- Provide any other information that will help the FOIA staff determine which USDA component agency may have responsive records,
- If your request is seeking records pertaining to another living individual, you must include a statement from that individual certifying his/her agreement for you to access his/her records. Without this bulleted information, the component(s) may not be able to conduct an effective search, and your request may be denied due to lack of specificity or lack of compliance with applicable regulations.

EXEMPTIONS CLAIMED FOR THE SYSTEM:

During the course of a FOIA/Privacy Act action, exempt material from other systems of records may become part of the case records in this system of records. To the extent that copies of exempt records from these other systems of records are entered into these Privacy Act case records, USDA hereby claims the same exemptions for the records as claimed in the original, primary system of records from which they originated, or in which they are maintained.

United States Department of Agriculture OCIO–01—FOIAXPRESS (FX)Narrative Statement

The purpose of the Freedom of Information Act Express (FX) system is to streamline and transform the USDA FOIA and Privacy Act request response process from a manual process to an automated system. Pursuant to FOIA and the Privacy Act, members of the public make information requests for agency records. Processing these requests requires the agency to maintain information on the requesters, including information necessary to correspond with the requesters, collect applicable fees, and search for requested records. FX will give USDA FOIA Officials and Privacy Act Officials the ability to enter FOIA requests into the system, track status, prepare responses, redact records, and complete the FOIA processing. FX has a Public Access Link (PAL) that will allow the public to submit and track their FOIA requests online. FX will be used by USDA to compile the annual FOIA report. FX will contain contact information about the individuals requesting records. Copies of the original agency records reviewed or processed in response to the request will be subject to the provisions of the Privacy Act System or Records from which they originated, if any. The authority to operate this system comes from the Freedom of Information Act, 5 U.S.C. 552, as amended by Public Law 104–231,110 Stat. 3048 and the Privacy Act of 1974, 5 U.S.C. 552a (e)(4)(A).

While the information in this system may be made available outside USDA as set forth in the routine uses, in most cases, the information was voluntarily submitted by the individual or their representative either as part of a request for information from USDA, or an appeal. USDA requires the accumulation of some privacy data in order to contact and correspond with individuals requesting information. Use of this system, as established, should not result in undue infringement of any individual's right to privacy.

The records contained in the system are protected by the confidentiality requirements of the USDA Office of the Chief Information Officer (OCIO) Cyber Security Manuals and the provisions of the Privacy Act. The vendor hosting the solution will operate the system in an approved, certified datacenter in the Washington, DC, metropolitan area. The system will not be hosted on a platform that shares applications or hardware with other organizations, or other organizational data.

Only authorized USDA FOIA or Privacy Act officials will have access to the records in this system on a need-to-know basis. Role-based access controls are used, and FX is only accessible via the Internet using USDA e-authentication application. Records in the system are encrypted. Users of the system are granted access upon successful completion of security training. User access is role based and restricted based on the least privilege allowed for performing the job function principle.

Due to the sensitive nature of FX, the system also adheres to the National Institute of Standards and Technology Special Publication 800–53 security controls, and Federal Information Processing Systems (FIPS) 199 and 200.

Moreover, specific USDA security requirements are adhered to through the USDA Cyber Security Manuals, including, but not limited to, DM3545–000 Personnel Security.

Supporting Documentation: Systems Notice: The Department of Agriculture has attached advance copies of the **Federal Register** notice of the new system of records.

[FR Doc. 2011–22241 Filed 8–30–11; 8:45 am]

BILLING CODE 3412–BA–P

DEPARTMENT OF AGRICULTURE

Animal and Plant Health Inspection Service

[Docket No. APHIS–2011–0076]

Fiscal Year 2012 Veterinary Import/Export, Diagnostic Services, and Export Certification for Plants and Plant Products User Fees

AGENCY: Animal and Plant Health Inspection Service, USDA.

ACTION: Notice.

SUMMARY: This notice pertains to user fees charged for Veterinary Services animal quarantine and other import- and export-related services that we provide for animals, animal products, birds, germ plasm, organisms, and vectors; for certain veterinary diagnostic services; and for export certification of plants and plant products. The purpose of this notice is to remind the public of the user fees for fiscal year 2012 (October 1, 2011, through September 30, 2012).

FOR FURTHER INFORMATION CONTACT: For information on user fee rate development, contact Mrs. Kris Caraher, Accountant, Financial Services Branch, FMD, APHIS, 4700 River Road, Unit 55, Riverdale, MD 20737–1231; (301) 734–0882.

For information on Veterinary Services animal quarantine and other import and export program operations, contact Ms. Carol A. Tuszynski, Director, Planning, Finance, and Strategy, VS, APHIS, 4700 River Road Unit 58, Riverdale, MD 20737–1231; (301) 734–0832.

For information on plant and plant product export certification program operations, contact Mr. Marcus McElvaine, Senior Export Specialist, Phytosanitary Issues Management, Plant Health Programs, PPQ, APHIS, 4700 River Road Unit 50, Riverdale, MD 20737–1231; (301) 734–8414.

For information concerning veterinary diagnostic program operations, contact Dr. Elizabeth Lautner, Director, National Veterinary Services Laboratories, VS, APHIS, 1800 Dayton Ave., Ames, IA 50010; (501) 663–7301.

SUPPLEMENTARY INFORMATION:

Background

Veterinary Import/Export User Fees

The regulations in 9 CFR part 130 (referred to below as the regulations) list user fees for import- and export-related services provided by the Animal and Plant Health Inspection Service (APHIS) for animals, animal products, birds, germ plasm, organisms, and vectors.

These user fees are authorized by section 2509(c)(1) of the Food, Agriculture, Conservation, and Trade Act of 1990, as amended (21 U.S.C. 136a), which provides that the Secretary of Agriculture may establish and collect fees that will cover the cost of providing import- and export-related services for animals, animal products, birds, germ plasm, organisms, and vectors.

The veterinary import/export user fees are found in §§ 130.2 through 130.11 and §§ 130.20 through 130.30 of the regulations and cover the following:

- Any service rendered by an APHIS representative for each animal or bird receiving standard housing, care, feed, and handling while quarantined in an APHIS-owned or -operated animal import center or quarantine facility;
- Birds or poultry, including zoo birds or poultry, receiving nonstandard housing, care, or handling to meet special requirements while quarantined in an APHIS-owned or -operated animal import center or quarantine facility;
- Exclusive use of space at APHIS Animal Import Centers;
- Processing import permit applications;
- Any service rendered by an APHIS representative for live animals presented for importation or entry into the United States through a land border port along the United States-Mexico border;
- Any service rendered for live animals at land border ports along the United States-Canada border;
- Miscellaneous services;
- Pet birds quarantined in an animal import center or other APHIS-owned or -supervised quarantine facility;
- The inspection of various import and export facilities and establishments;
- The endorsement of export health certificates that do not require the verification of tests or vaccinations;
- The endorsement of export health certificates that require the verification of tests and vaccinations; and
- Hourly rate and minimum user fees.

On October 1, 2011, the veterinary import/export user fees for fiscal year 2012 will take effect. You may view the regulations in 9 CFR part 130, which includes charts showing all of the fiscal year 2012 veterinary import/export user fees, on the Internet at: *http://www.access.gpo.gov/nara/cfr/waisidx_11/9cfr130_11.html.*

Veterinary Diagnostic Services User Fees

User fees to reimburse APHIS for the costs of providing veterinary diagnostic services are also contained in 9 CFR part 130. These user fees are authorized in section 2509(c) of the Food, Agriculture, Conservation, and Trade Act of 1990, as amended (21 U.S.C. 136a), which provides that the Secretary of Agriculture may, among other things, prescribe regulations and collect fees to recover the costs of veterinary diagnostics relating to the control and eradication of communicable diseases of livestock and poultry within the United States.

Veterinary diagnostics is the work performed in a laboratory to determine whether a disease-causing organism or chemical agent is present in body tissues or cells and, if so, to identify those organisms or agents. Services in this category include: (1) Performing identification, serology, and pathobiology tests and providing diagnostic reagents and other veterinary diagnostic materials and services for the National Veterinary Services Laboratories (NVSL) in Ames, IA; and (2) performing laboratory tests and providing reagents and other veterinary diagnostic materials and services at the NVSL Foreign Animal Disease Diagnostic Laboratory (NVSL FADDL) in Greenport, NY.

The veterinary diagnostic services user fees are found in §§ 130.14 through 130.19 and cover the following:

- Bacteriology isolation and identification tests performed at NVSL (excluding FADDL) or other authorized sites;
- Virology identification tests performed at NVSL (excluding FADDL) or other authorized sites;
- Bacteriology serology tests performed at NVSL (excluding FADDL) or other authorized sites;
- Virology serology tests performed at NVSL (excluding FADDL) or other authorized sites;
- Veterinary diagnostic tests performed at the Pathobiology Laboratory at NVSL (excluding FADDL) or other authorized sites;
- Bacteriology reagents produced by the Diagnostic Bacteriology Laboratory at NVSL (excluding FADDL) or other authorized sites;
- Virology reagents produced by the Diagnostic Virology Laboratory at NVSL (excluding FADDL) or other authorized sites; and
- Other veterinary diagnostic services or materials available from NVSL (excluding FADDL).

On October 1, 2011, the veterinary diagnostic services user fees for fiscal year 2012 will take effect. You may view the regulations in 9 CFR part 130, which includes charts showing all of the fiscal year 2012 veterinary import/export user fees, on the Internet at: *http://www.access.gpo.gov/nara/cfr/waisidx_11/9cfr130_11.html.*

User Fees for Export Certification of Plants and Plant Products

User fees for the issuance of export certificates for plants and plant products are contained in 7 CFR part 354. Export certificates issued in accordance with the regulations certify agricultural products as being considered free from plant pests, according to the phytosanitary requirements of the foreign countries to which the plants and plant products may be exported. Export certificates are also issued to certify that reexported plants or plant products conform to the most current phytosanitary requirements of the importing country and that, during storage in the United States, the consignment has not been subjected to risk of infestation or infection. These export certificates must be issued in accordance with 7 CFR part 353 to be accepted in international commerce.

In a final rule published in the **Federal Register** on July 8, 2009 (74 FR 32391–32400, Docket No. APHIS–2006–0137), and effective October 1, 2009, we established, for fiscal years 2007 through 2012 and beyond, user fees charged for export certification of plants and plant products. Services for this category include: (1) Certification for export or reexport of a commercial shipment; (2) certification for export or reexport of a low-value commercial or noncommercial shipment; and (3) replacement of any certificate for export or reexport.

The user fees charged for export certification of plants and plant products are found in § 354.3(g) and cover the following:

- Administrative fee for exporters who receive a certificate issued on behalf of APHIS by a designated State or county inspector;
- Fee for export or reexport certification of a commercial shipment;
- Fee for export or reexport certification of a low-value commercial shipment;
- Fee for export or reexport certification of a noncommercial shipment; and
- Fee for replacing any certificate.

On October 1, 2011, the user fees charged for export certificates for plants and plant products for fiscal year 2012 will take effect. You may view the regulations in 7 CFR part 354, which includes charts showing all of the fiscal year 2012 user fees charged for export certificates for plants and plant products, on the Internet at: *http://www.access.gpo.gov/nara/cfr/waisidx_11/7cfr354_11.html.*

Done in Washington, DC, this 25th day of August 2011.

Kevin Shea,

Acting Administrator, Animal and Plant Health Inspection Service.

[FR Doc. 2011–22242 Filed 8–30–11; 8:45 am]

BILLING CODE 3410–34–P

DEPARTMENT OF AGRICULTURE

Food Safety and Inspection Service

[Docket No. FSIS–2011–0013]

Availability of Final Compliance Guide for the Use of Video or Other Electronic Monitoring or Recording Equipment in Federally Inspected Establishments

AGENCY: Food Safety and Inspection Service, USDA.

ACTION: Notice of availability.

SUMMARY: The Food Safety and Inspection Service (FSIS) is announcing the availability of the final compliance guide on the use of video or other electronic monitoring or recording equipment in federally inspected establishments. FSIS has received Office of Management and Budget (OMB) approval of information collection under the Paperwork Reduction Act (PRA) related to Hazard Analysis and Critical Control Point (HACCP) and Sanitation Standard Operating Procedures (Sanitation SOP) video records. FSIS made changes to the final compliance guide based on comments received on the draft guide. FSIS has posted this final compliance guide on its Significant Guidance Documents Web page (*http://www.fsis.usda.gov/Significant_Guidance/index.asp*).

DATES: *Effective Date:* August 31, 2011.

FOR FURTHER INFORMATION CONTACT: Isabel Arrington, U.S. Department of Agriculture (USDA), FSIS, by phone at (402) 344–5000 or by e-mail at *Isabel.Arrington@fsis.usda.gov*.

SUPPLEMENTARY INFORMATION:

Background

On October 15, 2010 (75 FR 63434), FSIS posted on its Web site a draft guide on the use of video or other electronic monitoring or recording equipment in federally inspected establishments. The Agency issued the document as a draft guide because it needed Office of Management and Budget PRA approval on the information collection and stated that when it received OMB approval on the information collection, it would issue a final guide. FSIS also solicited comments on the compliance guide. FSIS now has OMB approval. The OMB approval number is 0583–0103. The guide is final, and establishments can use the recommendations in this guide on the use of video or other electronic monitoring or recording equipment for monitoring operations and facilities. The final compliance guide reflects comments received.

This compliance guide provides information to industry to help it maintain compliance with Federal regulations, including humane treatment of livestock and the use of good commercial practices in poultry.

FSIS is providing this guide to advise establishments that video or other electronic monitoring or recording equipment can be used in federally inspected establishments. This guide informs establishments of the Agency's expectations if they decide to use this type of equipment to create records to meet the requirements of the HACCP regulations, or the regulations governing Sanitation SOPs. In addition, this guide provides information on issues establishments should consider if they use this equipment for any other purpose, such as part of their food defense plans.

Comments

FSIS received a total of 1,217 comments on the draft compliance guide. Of those comments, 813 were a letter campaign form requesting that the use of video be mandated in establishments. In addition, 400 of them were general statements that video use should be made mandatory in establishments or expressed concerns about humane handling and worker safety. Another individual commented that FSIS should also require an accredited third party to audit the required video use in establishments.

Requiring video cameras in establishments is not necessary to ensure that animals are handled humanely in conjunction with slaughter. FSIS inspection program personnel (IPP) verify that establishments are meeting regulatory requirements for humane handling in livestock slaughter and good commercial practices in poultry slaughter. Worker safety issues are outside the scope of the compliance guide. Establishments that have video or electronic monitoring or recording equipment may choose to have a third party audit their use of such equipment.

Additionally, one meat and poultry trade association and one video company, recommended the guide state more clearly that the following video records are not subject to routine access by FSIS: Video records not designated by establishments for use in their

HACCP plan or Sanitation SOPs, video records that are used for food defense security, or video records that are used for other purposes in which recordkeeping is not required. In addition, these commenters requested a reference to congressional testimony by the video company regarding video systems and their use in the final compliance guide.

The final guide makes clearer which video records are subject to routine access by FSIS. Such records would include HACCP and Sanitation SOP records and records associated with other programs that are prerequisites to HACCP. FSIS did not include the reference to the congressional testimony by the video company in the final compliance guide because including that testimony would highlight one specific company.

A commenter from a non-profit organization for humane handling of animals and birds recommended that the guide state that video technology serves as a supplemental tool for establishments' humane handling and good commercial practice activities. The commenter also recommended that the guide state the importance of effective implementation of video monitoring to result in trustworthy and accurate information that helps to prevent inhumane treatment or poor commercial practices. Also, the commenter recommended that cameras for video should be positioned and operating in such a way to allow continuous viewing of all steps from unloading to stunning of livestock and poultry.

FSIS made changes in the final guide to address those comments.

USDA Nondiscrimination Statement

USDA prohibits discrimination in all its programs and activities on the basis of race, color, national origin, gender, religion, age, disability, political beliefs, sexual orientation, and marital or family status. (Not all prohibited bases apply to all programs.) Persons with disabilities who require alternative means for communication of program information (Braille, large print, audiotape, *etc.*) should contact USDA's Target Center at (202) 720–2600 (voice and TTY).

To file a written complaint of discrimination, write USDA, Office of the Assistant Secretary for Civil Rights, 1400 Independence Avenue, SW., Washington, DC 20250–9410 or call (202) 720–5964 (voice and TTY). USDA is an equal opportunity provider and employer.

Additional Public Notification

Public awareness of all segments of rulemaking and policy development is important. Consequently, in an effort to ensure that minorities, women, and persons with disabilities are aware of this notice, FSIS will announce it online through the FSIS Web page located at *http://www.fsis.usda.gov/regulations_&_policies/Federal_Register_Notices/index.asp.*

FSIS will also make copies of this **Federal Register** publication available through the FSIS Constituent Update, which is used to provide information regarding FSIS policies, procedures, regulations, **Federal Register** notices, FSIS public meetings, and other types of information that could affect or would be of interest to constituents and stakeholders. The Update is communicated via Listserv, a free electronic mail subscription service for industry, trade groups, consumer interest groups, health professionals, and other individuals who have asked to be included. The Update is also available on the FSIS Web page. Through the Listserv and Web page, FSIS is able to provide information to a much broader and more diverse audience. In addition, FSIS offers an electronic mail subscription service which provides automatic and customized access to selected food safety news and information. This service is available at *http://www.fsis.usda.gov/News_&_Events/Email_Subscription/.* Options range from recalls to export information to regulations, directives and notices. Customers can add or delete subscriptions themselves, and have the option to password protect their accounts.

Alfred V. Almanza,

Administrator.

[FR Doc. 2011–22286 Filed 8–30–11; 8:45 am]

BILLING CODE 3410–DM–P

DEPARTMENT OF AGRICULTURE

Forest Service

2010 Resources Planning Act (RPA) Assessment Draft

AGENCY: Forest Service, USDA.

ACTION: Notice of availability; request for comment.

SUMMARY: The draft 2010 Resources Planning Act (RPA) Assessment is available for review and comment at *http://www.fs.fed.us/research/rpa/.* The RPA Assessment is a legislatively mandated periodic assessment of the condition and trends of the Nation's renewable resources on forests and rangelands.

DATES: Comments must be received in writing or electronically on or before September 30, 2011, to be assured of consideration. Comments received after that date will be considered to the extent practicable.

ADDRESSES: Comments concerning this notice should be addressed to Dr. Linda Langner, Quantitative Sciences Staff, Forest Service, 1400 Independence Avenue, SW., Mailstop 1115, Washington, DC 20250–1115. Comments also may be submitted via facsimile to 703–605–5131 or by email using the comment form on the Web site *http://www.fs.fed.us/research/rpa/.* All comments, including names and addresses when provided, are placed in the record and are available for public inspection and copying. The public may inspect comments received at USDA Forest Service, 1400 Independence Avenue, SW., Washington DC, during normal business hours. Visitors are encouraged to call ahead to 202–205–1665 to facilitate entry to the building.

FOR FURTHER INFORMATION CONTACT: Dr. Linda Langner, Quantitative Sciences Staff by phone at 703–605–4886 or by email to *llangner@fs.fed.us.* Additional information about the RPA Assessment can be obtained on the Internet at *http://www.fs.fed.us/research/rpa/.*

Individuals who use telecommunication devices for the deaf (TDD) may call the Federal Relay Service (FRS) at 1–800–877–8339 between 8 a.m. and 8 p.m., Eastern Standard Time, Monday through Friday.

SUPPLEMENTARY INFORMATION: The 2010 Resources Planning Act (RPA) Assessment is the fifth prepared in response to the mandate in the Forest and Rangeland Renewable Resources Planning Act (Pub. L. 93–378, 88 Stat. 475, as amended) that was enacted in 1974. The RPA Assessment is intended to provide reliable information on the status, trends, and projected future of the Nation's forests and rangelands on a 10-year cycle. The RPA Assessment includes analyses of forests, rangelands, wildlife and fish, biodiversity, water, outdoor recreation, wilderness, urban forests, and the effects of climate change upon these resources.

Dated: August 23, 2011.

Jimmy L. Reaves,

Deputy Chief, Research and Development.

[FR Doc. 2011–22240 Filed 8–30–11; 8:45 am]

BILLING CODE 3410–11–P

DEPARTMENT OF AGRICULTURE

Forest Service

Eastern Washington Cascades Provincial Advisory Committee and the Yakima Provincial Advisory Committee

AGENCY: Forest Service, USDA.

ACTION: Notice of meeting.

SUMMARY: The Eastern Washington Cascades Provincial Advisory Committee and the Yakima Provincial Advisory Committee will meet on September 15, 2011 from 9 a.m. to 3 p.m. at the Okanogan-Wenatchee National Forest Headquarters Office, 215 Melody Lane, Wenatchee, WA. During this meeting information will be shared about prescribed burning and smoke management, Holden Mine clean-up operations, insect infestations on Blewett Pass and a report on Forest Plan Revision public meetings. All Eastern Washington Cascades and Yakima Province Advisory Committee meetings are open to the public.

FOR FURTHER INFORMATION CONTACT: Direct questions regarding this meeting to Clint Kyhl, Designated Federal Official, USDA, Okanogan-Wenatchee National Forest, 215 Melody Lane, Wenatchee, Washington 98801, phone 509–664–9200.

Dated: August 25, 2011.

Clinton Kyhl,

Designated Federal Official, Okanogan-Wenatchee National Forest.

[FR Doc. 2011–22255 Filed 8–30–11; 8:45 am]

BILLING CODE 3410–11–P

DEPARTMENT OF AGRICULTURE

Forest Service

Public Meeting, Cherokee National Forest Secure Rural Schools Resource Advisory Committee

AGENCY: Forest Service, USDA.

ACTION: Notice of meeting.

SUMMARY: In accordance with the Secure Rural Schools and Community Self Determination Act of 2000 (Pub. L. 106–393), [as reauthorized as part of Pub. L. 110–343] and the Federal Advisory Committee Act of 1972 (FACA), the U.S. Department of Agriculture, Forest Service, Cherokee National Forest Secure Rural Schools Resource Advisory Committee will meet as indicated below.

DATES: The Cherokee National Forest Secure Rural Schools Resource Advisory Committee meeting will be conducted on Wednesday, September 21, 2011, from 12:30–4:30 p.m.

ADDRESSES: The Cherokee National Forest Secure Rural Schools Resource Advisory Committee meeting will be held at the Bass Pro Shop at 3629 Outdoor Sportsmans Place in Kodak, TN 37764. Phone (865) 932–5600. The facility is located approximately 20 miles north of Knoxville, TN off I–40 at exit #407 (Sevierville, TN—Winfield Dunn Parkway).

FOR FURTHER INFORMATION CONTACT: Terry Bowerman, Designated Federal Official, Cherokee National Forest, 4900 Asheville Hwy SR 70, Greeneville, TN 37743: Telephone: 423–638–4109, e-mail *tbowerman@fs.fed.us.*

SUPPLEMENTARY INFORMATION: The Cherokee National Forest Secure Rural Schools Resource Advisory Committee (RAC) proposes projects and funding to the Secretary of Agriculture under Section 203 of the Secure Rural Schools and Community Self-Determination Act of 2000 (as reauthorized as part of Pub. L. 110–343). The Cherokee National Forest RAC consists of 15 people selected to serve on the committee by Secretary of Agriculture Tom Vilsack. Certain Tennessee counties are setting aside a percentage of their Secure Rural Schools Act payment under Title II of the Act to be used for projects on federal land. The RAC will ultimately review and recommend projects to be funded from this money. Projects approved must benefit National Forests lands. Projects can maintain infrastructure, improve the health of watersheds and ecosystems, protect communities, and strengthen local economies.

The agenda for the September 21, 2011, meeting of the Cherokee National Forest RAC will focus on review and consideration of proposed projects. RAC meetings are open to the public.

Dated: August 12, 2011.

H. Thomas Speaks, Jr.,

Forest Supervisor, Cherokee National Forest.

[FR Doc. 2011–21474 Filed 8–30–11; 8:45 am]

BILLING CODE 3410–11–M

COMMISSION ON CIVIL RIGHTS

Sunshine Act Notice

AGENCY: United States Commission on Civil Rights.

ACTION: Notice of meeting.

DATE AND TIME: Friday, September 9, 2011; 9:30 a.m. EDT.

PLACE: 624 Ninth Street, NW., Room 540, Washington, DC 20425.

Meeting Agenda

This meeting is open to the public.

I. Approval of Agenda.

II. Approval of the August 12, 2011 Meeting Minutes.

III. Program Planning:
- Approval of Age Discrimination briefing report.
- Approval of the 2012 Enforcement Report Project Outline and Discovery Plan.

IV. Management and Operations:
- Staff Director's report.
- Discussion of the 2013 Budget.
- Discussion of the use of Commissioner Letterhead.
- Discussion of the 2012 Meeting Calendar.

V. State Advisory Committee Issues:
- Re-chartering the California SAC.
- Re-chartering the Georgia SAC.

VI. Adjourn.

CONTACT PERSON FOR FURTHER INFORMATION: Lenore Ostrowsky, Acting Chief, Public Affairs Unit (202) 376–8591.

Hearing-impaired persons who will attend the meeting and require the services of a sign language interpreter should contact Pamela Dunston at (202) 376–8105 or at *signlanguage@usccr.gov* at least seven business days before the scheduled date of the meeting.

Kimberly A. Tolhurst,

Senior Attorney-Advisor.

[FR Doc. 2011–22425 Filed 8–29–11; 4:15 pm]

BILLING CODE 6335–01–P

DEPARTMENT OF COMMERCE

Membership of the Departmental Performance Review Board

AGENCY: Department of Commerce.

ACTION: Notice of membership on the Departmental Performance Review Board.

SUMMARY: In accordance with 5 U.S.C., 4314(c)(4), Department of Commerce (DOC) announces the appointment of persons to serve as members of the Departmental Performance Review Board (DPRB). The DPRB provides an objective peer review of the initial performance ratings, performance-based pay adjustments and bonus recommendations, higher-level review requests and other performance-related actions submitted by appointing authorities for Senior Executive Service (SES) members whom they directly supervise, and makes recommendations based upon its review. The term of the new members of the DPRB will expire December 31, 2013.

DATES: *Effective Date:* The effective date of service of appointees to the Departmental Performance Review Board is based upon publication of this notice.

FOR FURTHER INFORMATION CONTACT: Denise A. Yaag, Director, Office of Executive Resources, Office of Human Resources Management, Office of the Director, 14th and Constitution Avenue, NW., Washington, DC 20230, (202) 482–3600.

SUPPLEMENTARY INFORMATION: The names and position titles of the members of the DPRB are set forth below by organization:

Department of Commerce Departmental Performance Review Board Membership 2011–2013

Office of the Secretary, John C. Connor, Director for White House Liaison, Ellen Herbst, Senior Advisor for Policy & Program Integration.

Office of General Counsel, Michael A. Levitt, Assistant General Counsel for Legislation and Regulation, Barbara S. Fredericks, Assistant General Counsel for Administration, Geovette E. Washington, Deputy General Counsel.

Chief Financial Officer and Assistant Secretary for Administration, William J. Fleming, Director for Human Resources Management.

Office of the Chief Information Officer, Earl B. Neal, Director of Information Technology, Security, Infrastructure and Technology.

Bureau of Industry and Security, Gay G. Shrum, Director of Administration.

Bureau of the Census, Arnold A. Jackson, Associate Director for Decennial Census, Marilia A. Matos, Associate Director for Field Operations.

Economics and Statistics Administration, Nancy Potok, Deputy Under Secretary for Economic Affairs, Joanne Buenzli Crane, Chief Financial Officer and Director for Administration.

Economics and Development Administration, Thomas Guevara, Deputy Assistant Secretary for Regional Affairs, Sandra Walters, Chief Financial Officer and Director of Administration.

International Trade Administration, Michelle O'Neill, Deputy Under Secretary for International Trade, Stephen P. Jacobs, Deputy Assistant Secretary for Market Access and Compliance, Rene A. Macklin, Chief Information Officer.

Minority Business Development Agency, Alejandra Y. Castillo, Deputy Director, Edith J. McCloud, Associate Director for Management.

National Oceanic and Atmospheric Administration, Robert J. Byrd, Chief Financial Officer/Chief Administrative Officer, NWS, Joseph, F. Klimavicz, Chief Information Officer and Director of High Performance Computing and Communications, Maureen Wylie, Chief Financial Officer, NOAA, Kathleen A. Kelly, Director, Office of Satellite Operations, NESDIS.

National Technical Information Service, Bruce E. Borzino, Director, National Technical Information Service.

National Telecommunications and Information Administration, Anna M. Gomez, Deputy Assistant Secretary for Communications and Information, Bernadette McGuire-Rivera, Associate Administrator for Telecommunications and Information Applications.

National Institute of Standards and Technology, Richard F. Kayser, Jr., Chief Safety Officer.

Dated: August 22, 2011.

Denise A. Yaag,

Director, Office of Executive Resources.

[FR Doc. 2011–22099 Filed 8–30–11; 8:45 am]

BILLING CODE 3510–BS–M

DEPARTMENT OF COMMERCE

Membership of the Office of the Secretary Performance Review Board

AGENCY: Department of Commerce.

ACTION: Notice of membership on the Office of the Secretary Performance Review Board.

SUMMARY: In accordance with 5 U.S.C., 4314 (c)(4), Department of Commerce (DOC) announces the appointment of persons to serve as members of the Office of the Secretary (OS) Performance Review Board (PRB). The OS PRB is responsible for reviewing performance ratings, pay adjustments and bonuses of Senior Executive Service (SES) members. The term of the new members of the OS PRB will expire December 31, 2013.

DATES: *Effective Date:* The effective date of service of appointees to the Office of the Secretary Performance Review Board is upon publication of this notice.

FOR FURTHER INFORMATION CONTACT: Denise A. Yang, Director, Office of Executive Resources, Office of Human Resources Management, Office of the Director, 14th and Constitution Avenue, NW., Washington, DC 20230, (202) 482–3600.

SUPPLEMENTARY INFORMATION: The names, position titles, and type of appointment of the members of the OS/PRB are set forth below by organization:

Department of Commerce

Office of the Secretary

2011–2013 Performance Review Board Membership

Office of the Secretary

John Connor, Director, Office of White House Liaison.

Earl B. Neal, Director, Office of Information Technology, Security, Infrastructure, and Technology.

Ellen Herbst, Senior Advisor for Policy & Program Integration.

Office of Assistant Secretary for Administration

Suzan J. Aramaki, Director, Office of Civil Rights.

Alfred J. Broadbent, Director, Office of Security.

Economic Development Administration

Barry Bird, Chief Counsel for Economic Development.

National Oceanic and Atmospheric Administration

James M. Turner, Deputy Assistant Secretary for International Affairs.

Office of the General Counsel

Michael A. Levitt, Assistant General Counsel for Legislation and Regulation.

Barbara S. Fredericks, Assistant General Counsel for Administration (Alternate).

Dated: August 22, 2011.

Denise A. Yaag,

Director, Office of Executive Resources.

[FR Doc. 2011–22101 Filed 8–30–11; 8:45 am]

BILLING CODE 3510–BS–M

DEPARTMENT OF COMMERCE

Bureau of the Census

Census Scientific Advisory Committee

AGENCY: Bureau of the Census, U.S. Department of Commerce.

ACTION: Notice of public meeting.

SUMMARY: The Bureau of the Census (U.S. Census Bureau) is giving notice of a meeting of the Census Scientific Advisory Committee (C–SAC). The Committee will address policy, research, and technical issues relating to a full range of Census Bureau programs and activities, including communications, decennial, demographic, economic, field operations, geographic, information technology, and statistics. Last minute changes to the agenda are possible, which could prevent giving advance public notice of schedule adjustments.

DATES: September 22 and 23, 2011. On September 22, the meeting will begin at approximately 8:30 a.m. and adjourn at approximately 5 p.m. On September 23, the meeting will begin at approximately 8:30 a.m. and adjourn at 12:30 p.m.

ADDRESSES: The meeting will be held at the U.S. Census Bureau Conference Center, 4600 Silver Hill Road, Suitland, Maryland 20746.

FOR FURTHER INFORMATION CONTACT: Jeri Green, Committee Liaison Officer, U.S. Department of Commerce, U.S. Census Bureau, Room 8H182, 4600 Silver Hill Road, Washington, DC 20233, telephone 301–763–6590. For TTY callers please use the Federal Relay Service 1–800–877–8339.

SUPPLEMENTARY INFORMATION: Members of the C–SAC are appointed by the Director, U.S. Census Bureau. The Committee provides scientific and technical expertise, as appropriate, to address Census Bureau program needs and objectives. The Committee has been established in accordance with the Federal Advisory Committee Act (Title 5, United States Code, Appendix 2, Section 10).

The meeting is open to the public, and a brief period is set aside for public comments and questions. Persons with extensive questions or statements must submit them in writing at least three days before the meeting to the Committee Liaison Officer named above. If you plan to attend the meeting, please register by Monday, September 19, 2011. You may access the online registration form with the following link: *http://www.regonline.com/csacsep2011*. Seating is available to the public on a first-come, first-served basis.

This meeting is physically accessible to people with disabilities. Requests for sign language interpretation or other auxiliary aids should also be directed to the Committee Liaison Officer as soon as known, and preferably two weeks prior to the meeting.

Dated: August 25, 2011.

Robert M. Groves,

Director, Bureau of the Census.

[FR Doc. 2011–22276 Filed 8–30–11; 8:45 am]

BILLING CODE 3510–07–P

DEPARTMENT OF COMMERCE

Bureau of Industry and Security

Mahan Airways, Et al.; Order Renewing Order Temporarily Denying Export Privileges and Also Making that Temporary Denial of Export Privileges Applicable co Additional Related Persons

Mahan Airways, Mahan Tower, No. 21, Azadegan St., M.A. Jenah Exp. Way, Tehran, Iran;
Zarand Aviation, a/k/a GIE Zarand Aviation, 42 Avenue Montaigne, 75008 Paris, France; and 112 Avenue Kleber, 75116 Paris, France;
Gatewick LLC, a/k/a Gatewick Freight & Cargo Services, a/k/a Gatewick Aviation Services, G#22 Dubai Airport Free Zone, P.O. Box 393754, Dubai, United Arab Emirates; and P.O. Box 52404, Dubai, United Arab Emirates; and
Mohamed Abdulla Alqaz Building, Al Maktoum Street, Al Rigga, Dubai, United Arab Emirates;
Pejman Mahmood Kosarayanifard, a/k/a Kosarian Fard, P.O. Box 52404, Dubai, United Arab Emirates;
Mahmoud Amini, G#22 Dubai Airport Free Zone, P.O. Box 393754, Dubai, United Arab Emirates; and P.O. Box 52404, Dubai, United Arab Emirates; and
Mohamed Abdulla Alqaz Building, Al Maktoum Street, Al Rigga, Dubai, United Arab Emirates;
Kerman Aviation, a/k/a GIE Kerman Aviation, 42 Avenue Montaigne 75008, Paris, France;
Sirjanco Trading, P.O. Box 8709, Dubai, United Arab Emirates;
Ali Eslamian, 4th Floor, 33 Cavendish Square, London, W1G0PW, United Kingdom; and 2 Bentinck Close, Prince Albert Road St. Johns Wood, London NW87RY, United Kingdom.

Pursuant to Section 766.24 of the Export Administration Regulations, 15 CFR parts 730–774 (2011) (''EAR'' or the ''Regulations''), I hereby grant the request of the Office of Export Enforcement (''OEE'') to renew the February 25, 2011 Order Temporarily Denying the Export Privileges of Mahan Airways, Zarand Aviation, Gatewick LLC, Pejman Mahmood Kosarayanifard, and Mahmoud Amini, as I find that renewal of the Temporary Denial Order (''TDO'') is necessary in the public interest to prevent an imminent violation of the EAR.[1] Additionally, pursuant to Section 766.23 of the Regulations, including the provision of notice and an opportunity to respond, I find it necessary to add the following persons as related persons in order to prevent evasion of the TDO:

Kerman Aviation, a/k/a GIE Kerman Aviation, 42 Avenue Montaigne 75008, Paris, France;
Sirjanco Trading LLC, P.O. Box 8709, Dubai, United Arab Emirates; and
Ali Eslamian, 4th Floor, 33 Cavendish Square, London, W1G0PW, United Kingdom; and
2 Bentinck Close, Prince Albert Road St. Johns Wood, London NW87RY, United Kingdom.

I. Procedural History

On March 17, 2008, Darryl W. Jackson, the then-Assistant Secretary of Commerce for Export Enforcement (''Assistant Secretary''), signed a TDO denying Mahan Airways' export privileges for a period of 180 days on the grounds that its issuance was necessary in the public interest to prevent an imminent violation of the Regulations. The TDO also named as denied persons Blue Airways, of Yerevan, Armenia (''Blue Airways of Armenia''), as well as the ''Balli Group Respondents,'' namely, Balli Group PLC, Balli Aviation, Balli Holdings, Vahid Alaghband, Hassan Alaghband, Blue Sky One Ltd., Blue Sky Two Ltd., Blue Sky Three Ltd., Blue Sky Four Ltd., Blue Sky Five Ltd., and Blue Sky Six Ltd., all of the United Kingdom. The TDO was issued *ex parte* pursuant to Section 766.24(a), and went into effect on March 21, 2008, the date it was published in the **Federal Register.**[2] The TDO was most recently renewed on February 25, 2011, while also adding Pejman Mahmood Kosarayanifard a/k/a Kosarian Fard and Mahmoud Amini to the TDO as related persons. Additionally, on July 1, 2011, the TDO was modified by adding Zarand Aviation as a respondent in order to prevent an imminent violation. Specifically, Zarand Aviation owned an aircraft subject to the Regulations being operated for the benefit of Mahan Airways in violation of both the TDO and the Regulations.

On August 3, 2011, BIS, through its Office of Export Enforcement (''OEE''), filed a written request for renewal of the TDO. The current TDO dated February 25, 2011, as modified on July 1, 2011, will expire, unless renewed, on August 24, 2011. Notice of the renewal request

[1] The February 25, 2011 Order was published in the **Federal Register** on March 7, 2011. *See* 76 FR 112318.

[2] The TDO was subsequently renewed in accordance with Section 766.24(d) of the Regulations on September 17, 2008, March 16, 2009, September 11, 2009, March 9, 2010, September 3, 2010, and most recently on February 24, 2011. Prior to each renewal, each Respondent was given the opportunity to oppose renewal in accordance with Section 766.24(d)(3) of the Regulations. Each renewal or modification order was published in the **Federal Register**. As of March 9, 2010, the Balli Group Respondents and Blue Airways were no longer subject to the TDO.

was provided to Mahan Airways and Zarand Aviation by delivery of a copy of the request in accordance with Sections 766.5 and 766.24(d) of the Regulations. No opposition to any aspect of renewal of the TDO has been received from either Mahan Airways or Zarand Aviation, while neither Gatewick, nor Kosarian Fard nor Mahmoud Amini has at any time appealed the related person determinations I made as part of the September 3, 2010 and February 25, 2011 Renewal Orders.[3]

Additionally, OEE has requested the addition of Kerman Aviation, Sirjanco Trading LLC, and Ali Eslamian as related persons in accordance with Section 766.23. Each proposed related person was provided written notice of BIS's intent to add them to the TDO pursuant to Section 766.23(b) of the Regulations along with an opportunity to respond. No opposition was received from either Sirjanco Trading LLC or Kerman Aviation, while Ali Eslamian, via counsel, made two written submissions dated April 19, 2011 and August 19, 2011, respectively, opposing his addition to the TDO. In addition, after making his initial written submission, Ali Eslamian offered, via counsel, to meet with OEE/BIS, and he and his counsel subsequently met with BIS Special Agents on June 23, 2011.

II. Renewal of the TDO

A. Legal Standard

Pursuant to Section 766.24(b) of the Regulations, BIS may issue an order temporarily denying a Respondent's export privileges upon a showing that the order is necessary in the public interest to prevent an ''imminent violation'' of the Regulations. 15 CFR 766.24(b)(1). ''A violation may be 'imminent' either in time or degree of likelihood.'' 15 CFR 766.24(b)(3). BIS may show ''either that a violation is about to occur, or that the general circumstances of the matter under investigation or case under criminal or administrative charges demonstrate a likelihood of future violations.'' *Id.* As to the likelihood of future violations, BIS may show that ''the violation under investigation or charges is significant, deliberate, covert and/or likely to occur again, rather than technical or negligent [.]'' *Id.* A ''lack of information establishing the precise time a violation may occur does not preclude a finding that a violation is imminent, so long as there is sufficient reason to believe the likelihood of a violation.'' *Id.*

B. The TDO and BIS's Request for Renewal

OEE's request for renewal is based upon the facts underlying the issuance of the initial TDO and the TDO renewals in this matter and the evidence developed over the course of this investigation indicating Mahan Airways' blatant disregard of U.S. export controls and the TDO. The initial TDO was issued as a result of evidence that showed that Mahan Airways and other parties engaged in conduct prohibited by the EAR by knowingly re-exporting to Iran three U.S.-origin aircraft, specifically Boeing 747s (''Aircraft 1–3''), items subject to the EAR and classified under Export Control Classification Number (''ECCN'') 9A991.b, without the required U.S. Government authorization. Further evidence submitted by BIS indicated that Mahan Airways was involved in the attempted re-export of three additional U.S.-origin Boeing 747s (''Aircraft 4–6'') to Iran.

As discussed in the September 17, 2008 TDO Renewal Order, evidence presented by BIS indicated that Aircraft 1–3 continued to be flown on Mahan Airways' routes after issuance of the TDO, in violation of the Regulations and the TDO itself.[4] It also showed that Aircraft 1–3 had been flown in further violation of the Regulations and the TDO on the routes of Iran Air, an Iranian Government airline. Moreover, as discussed in the March 16, 2009, September 11, 2009 and March 9, 2010 Renewal Orders, Mahan Airways registered Aircraft 1–3 in Iran and were issued Iranian tail numbers, including EP–MNA and EP–MNB, and continued to operate at least two of Aircraft 1–3 in violation of the Regulations and the TDO,[5] while also committing an additional knowing and willful violation of the Regulations and the TDO when it negotiated for and acquired an additional U.S.-origin aircraft. The additional aircraft was an MD–82 aircraft, which was subsequently painted in Mahan Airways livery and flown on multiple Mahan Airways' routes under tail number TC–TUA.

The March 9, 2010 Renewal Order also noted that a court in the United Kingdom (''U.K.'') had found Mahan Airways in contempt of court on February 1, 2010, for failing to comply with that court's December 21, 2009 and January 12, 2010 orders compelling Mahan Airways to remove the Boeing 747s from Iran and ground them in the Netherlands. Mahan Airways and the Balli Group Respondents have been litigating before the U.K. court concerning ownership and control of Aircraft 1–3. In a letter to the U.K. court dated January 12, 2010, Mahan Airways' Chairman indicated, inter alia, that Mahan Airways opposes U.S. Government actions against Iran, that it continued to operate the aircraft on its routes in and out of Tehran (and had 158,000 ''forward bookings'' for these aircraft), and that it wished to continue to do so and would pay damages if required by that court, rather than ground the aircraft. The September 3, 2010 Renewal Order pointed out that Mahan Airways' violations of the TDO extended beyond operating U.S.-origin aircraft in violation of the TDO and attempting to acquire additional U.S.-origin aircraft. In February 2009, while subject to the TDO, Mahan Airways participated in the export of computer motherboards, items subject to the Regulations and designated as EAR99, from the United States to Iran, via the UAE, in violation of both the TDO and the Regulations, by transporting and/or forwarding the computer motherboards from the UAE to Iran. Mahan Airways' violations were facilitated by Gatewick, which not only participated in the transaction, but also has stated to BIS that it is Mahan Airways' sole booking agent for cargo and freight forwarding services in the UAE.

Moreover, in a January 24, 2011 filing in the U.K. Court, Mahan Airways asserted that Aircraft 1–3 are not being used, but stated in pertinent part that the aircraft are being maintained in Iran especially ''in an airworthy condition'' and that, depending on the outcome of its U.K. Court appeal, the aircraft ''could immediately go back into service * * * on international routes into and out of Iran.'' Mahan Airways' January 24, 2011 submission to U.K. Court of Appeal, at p. 25, paragraphs 108,110. This clearly stated intent, both on its own and in conjunction with Mahan Airways' prior misconduct and statements, demonstrates the need to renew the TDO in order to prevent imminent future violations.

Most recently, OEE has presented evidence that Mahan Airways continues to evade U.S. export control laws by operating a French registered Airbus A310 aircraft (tail number F–OJHH), an

[3] A party named or added as a related person may not oppose the issuance or renewal of the underlying temporary denial order, but may file an appeal of the related person determination in accordance with Section 766.23(c).

[4] Engaging in conduct prohibited by a denial order violates the Regulations. 15 CFR 764.2(a) and (k).

[5] The third Boeing 747 appeared to have undergone significant service maintenance and may not have been operational at the time of the March 9, 2010 Renewal Order.

aircraft subject to the Regulations,[6] which bears Mahan Airways livery, colors and logo on flights into and out of Iran. The aircraft is owned by Zarand Aviation, an entity whose corporate registration lists Mahan Air General Trading as a member of the Groupement D'interet Economique (''Economic Interest Group''). This aircraft has been temporarily grounded at Birmingham airport in the United Kingdom (''U.K''). Prior to its grounding by U.K. officials, this aircraft was scheduled to depart from the U.K. to Tehran, Iran. Publically available evidence submitted by OEE showed the aircraft bearing the livery, colors and logo of Mahan Airways. Moreover, French Civil Aviation records showed the aircraft is being leased to Mahan Airways.

C. Findings

Under the applicable standard set forth in Section 766.24 of the Regulations and my review of the record here, I find that the evidence presented by BIS convincingly demonstrates that Mahan Airways has continually violated the EAR and the TDO, that such knowing violations have been significant, deliberate and covert, and that there is a likelihood of future violations. Additionally, should the U.K. grounding order be lifted there is a significant risk that the Zarand Aviation aircraft will be re-exported to Iran for the use or benefit of Mahan Airways in violation of the TDO. Therefore, renewal of the TDO is necessary to prevent further violations and will give notice to persons and companies in the United States and abroad that they should continue to cease dealing with Mahan Airways and Zarand Aviation in export transactions involving items subject to the EAR and is consistent with the public interest to prevent imminent violation of the EAR.

III. Addition of Related Persons

A. Legal Standard

Section 766.23 of the Regulations provides that ''[i]n order to prevent evasion, certain types of orders under this part may be made applicable not only to the respondent, but also to other persons then or thereafter related to the respondent by ownership, control, position of responsibility, affiliation, or other connection in the conduct of trade or business. Orders that may be made applicable to related persons include those that deny or affect export privileges, including temporary denial orders * * *.'' 15 CFR 766.23(a).

B. Analysis and Findings

OEE has requested that Kerman Aviation, Sirjanco Trading LLC, and Ali Eslamian be added as related persons in order to prevent evasion of the TDO. As noted above, each entity was provided written notice of OEE's intent to add them as a related person to the TDO. No response was received from either Kerman Aviation or Sirjanco Trading LLC. Mr. Eslamian, as discussed in further detail below, submitted two written responses opposing his addition to the TDO.

Kerman Aviation

In accordance with Section 766.23 of the Regulations, OEE provided Kerman Aviation with notice of its intent to seek an order adding Kerman to the TDO as a related person to Mahan Airways in order to prevent evasion of the TDO, via a notice letter sent on July 5, 2011. No response has been received from Kerman Aviation.

Kerman Aviation's corporate registration and civil aviation documents show a significant corporate relationship with and/or business connection to Mahan Airways. French Civil Aviation registration records show that Kerman Aviation's fleet consists entirely of one active and airworthy Airbus A310 (tail number F–OJHI), an item subject to the Regulations based on its U.S.-origin engines, which bears the livery, logo and colors of Mahan Airways and is listed as being leased to Mahan. Moreover, according to Kerman Aviation's French corporate registration documents, both Mahan Aviation Services Company and Mahan Air General Trading are listed as Economic Interest Group members. I would note that Mahan Air General Trading is also listed as an Economic Interest Group member for Zarand Aviation, an entity which, as discussed *supra*, owns one Airbus A310 aircraft being operated by and for the benefit of Mahan Airways. In addition, Kerman Aviation shares the same address with Zarand Aviation.

I find pursuant to Section 766.23 that Kerman Aviation is a related person to Mahan Airways, and that adding Kerman Aviation to the TDO is necessary to prevent evasion of the TDO.

Sirjanco Trading LLC

In accordance with Section 766.23 of the Regulations, OEE provided Sirjanco Trading LLC with notice of its intent to seek an order adding Sirjanco Trading LLC to the TDO as a related person to Mahan Airways in order to prevent evasion of the TDO, via a notice letter sent on April 7, 2011. No response has been received from Sirjanco Trading LLC.

OEE has presented evidence that Sirjanco Trading LLC, a company which acquires and resells aircraft parts and components, is a related person to Mahan Airways. Sirjanco Trading LLC's primary owner is Ghulam Redha Khodrat Mahmoudi (a/k/a Gholamreza Mahmoudi), who signed a written witness statement dated May 31, 2009, as part of the U.K. litigation between Mahan Airways and the Balli Group, admitting to being both a Mahan Airways' shareholder and its vice president for business development. Moreover, Sirjanco shares the same Dubai mailing address and telephone number with another Mahan Airways affiliate, Mahan Air General Trading. Lastly, Ali Eslamain, as discussed in more detail below, informed OEE on June 23, 2011, that Sirjanco is currently managed by Hamid Reza Malakotipour, who is also the Managing Director of Mahan Air General Trading.[7]

I find pursuant to Section 766.23 that Sirjanco Trading LLC is a related person to Mahan Airways, and that adding Sirjanco Trading LLC to the TDO is necessary to prevent evasion of the TDO.

Ali Eslamian

OEE notified Mr. Eslamian of its intent to add him to the TDO as a person related to Mahan Airways, via a written notice letter dated and sent on April 7, 2011. That letter apprised Mr. Eslamian of his opportunity to make a submission opposing his addition.

OEE has produced evidence, including, but not limited to, a February 6, 2009 signed witness statement by Mr. Eslamian submitted during the Mahan Airways-Balli Group U.K. litigation described above. Eslamian's written testimony details his longstanding business relationship with Mahan Airways' senior officers and his specific involvement in Mahan Airways' original conspiracy to acquire U.S.-origin 747s. Eslamian admits he was originally approached by Mahan Airways' Managing Director Hamid Arabnejad and Vice President for Business Development Gholamreza Mahmoudi, who were seeking to establish a company in the United Kingdom for the purpose of ''making arrangements for them which Mahan Air was unable to do directly.'' Eslamian, along with

[6] The aircraft is powered with U.S.-origin engines, items subject to the EAR and classified as Export Control Classification (''ECCN'') 9A991.d. Because the aircraft contains U.S.-origin items valued at more than 10 percent of the total value of the aircraft, it is also subject to the EAR if re-exported to Iran and classified as ECCN 9A991.b.

[7] I note that Mahan Air General Trading is also listed as an Economic Interest Group member of both Zarand Aviation and Kerman Aviation.

Arabnejad and Mahmoudi, subsequently formed Skyco (U.K.) Ltd. (''Skyco)'', which Mr. Eslamian admits buys and sells aircraft, aircraft engines and other aviation related services, and where he remains a shareholder and managing director. Additionally, Eslamian, along with Mahan Airways technicians, inspected Balli Aircraft 4–6 that Mahan was seeking to acquire illegally. At the request of Mahan Airways, he also attended the initial meetings between Mahan Airways and the Balli Group principals during which it was proposed that the Balli Group or Balli entities would act as a front for Mahan Airways in Mahan's scheme to acquire U.S.-origin aircraft.

In response to the April 7, 2011 notice letter, Eslamian submitted a written response dated April 19, 2011, via his U.S.-based counsel, in which he stated that he sold his interest in Sirjanco Trading LLC by agreement dated June 3, 2003. Eslamian's written submission failed to address in any manner the subject of the April 7, 2011 notice letter, specifically his business relationship or connection to Mahan Airways. Instead, it attached a document that appears to be an agreement providing for the sale of Eslamian's shares in Sirjanco Trading LLC to Gholamreza Mahmoudi, the Mahan officer who, as discussed above, co-founded Skyco (U.K.) Ltd. with Eslamian and a Mahan managing director.

Having failed to contest that he had a relationship with Mahan Airways, Eslamian, again via counsel, offered to meet with BIS. Eslamian and his counsel thereafter met with BIS Special Agents at length on June 23, 2011. During that meeting, Eslamian provided information admitting his longstanding business relationship and connections to senior Mahan Airways officers and/or directions, including Hamid Arabnejad and Gholamreza Mahmoudi. Mr. Eslamian also informed OEE that Sirjanco Trading LLC is a significant customer of Skyco, where Eslamian remains a managing director and owner, thereby undermining his efforts via his April 19, 2011 response to deny any continuing connection to Sirjanco Trading. Mr. Eslamian was able to provide detailed insight into how Mahan Airways maintains and repairs its aircraft through the use of facilities in third countries.

While not required by the Regulations, OEE provided Mr. Eslamian with yet a further opportunity to respond regarding his relationship with Mahan Airways and to oppose his addition to the TDO as a related person. Via email correspondence between counsel for BIS and Eslamian's U.S.-based counsel, BIS provided Eslamian notice on August 5, 2011, that BIS would provide an additional 14 days, that is, until August 19, 2011, for a further response to the April 7, 2011 notice letter regarding his relationship with Mahan Airways. In follow-up correspondence between counsel, Eslamian indicated on August 8, 2011, that he would file a response by August 19, 2011, and when he asked for further particulars, BIS referenced Eslamian's role in the Mahan Airways-Balli Group transactions, and his related roles at Skyco and Sirjanco, all matters included in Eslamian's U.K. testimony on behalf of Mahan Airways and/or in the June 23, 2011 meeting.

Eslamian made a second written submission on August 19, 2011, via counsel. This submission reiterated the assertions he made on April 19, 2011, while also raising a second line of argument that he was not given proper notice or opportunity to respond to OEE's assertion that he is a related person to Mahan Airways.

Eslamian's understanding of the Regulations as it relates to related persons is misplaced at best. OEE properly provided Mr. Eslamian written notice of its intent to add him as a related person to the TDO in accordance with Section 766.23(b) of the Regulations, via its notice letter dated April 7, 2011. Having already satisfied the Regulation's notice requirements for related persons, OEE went above what was required and offered Eslamian additional opportunities to respond, including the opportunity for a second written response.

Similarly unsupported is Eslamian's argument that the related person notice was defective on the asserted ground that as a potential related person he was entitled to service of a copy of OEE's renewal request concerning the existing TDO. Eslamian was not a party to the existing TDO in any capacity and his August 19, 2011 submission fails to cite a provision of Part 766 of the Regulations supporting his argument. *See also* Section 766.24(d)(3)(ii) of the Regulations (a person ''designated as a related person may *not* oppose issuance or renewal of the temporary denial order, but may file an appeal [regarding his related person status] in accordance with § 766.23(c) of this part'')(emphasis added).

Eslamian has acknowledged, furthermore, that he did receive a copy of the TDO renewal request, apparently from Mahan Airways and/or Zarand Aviation. His counsel informed BIS counsel on August 18, 2011, that a copy had been obtained that day or the day before. The discussion contained in the renewal request is consistent with the April 7, 2011 notice letter, the June 23, 2011 meeting, and the email correspondence, via counsel, beginning on August 5, 2011.

I find without merit Mr. Eslamian's argument that he did not receive adequate notice or opportunity to contest his addition as a related person pursuant to Section 766.23 of the Regulations, of which he first received notice more than four months ago. In addition to the ample time and multiple opportunities Eslamian had to and did make responses, both in writing and orally, I note that the evidence concerning his relationship with and connection to Mahan Airways is drawn from testimony and statements provided by Eslamian himself.

I further find in accordance with Section 766.23 of the Regulations that Eslamian is a related person to Mahan Airways and that it is necessary to add him to the TDO in order to prevent its evasion. The record amply demonstrates his long-running, varied and ongoing connections to Mahan Airways, based on evidence submitted by BIS and summarized above, including, but not limited to, Eslamian's U.K. testimony and statements and admissions he made during the June 23, 2011 meeting. Moreover, he is positioned, as he has done previously, to participate in or facilitate unlawful conduct by Mahan Airways, as it seeks to obtain or use aircraft, aircraft engines or other parts, and aircraft services, to further its activities in violation of the Regulations and the TDO.

IV. Order

It Is Therefore Ordered:

First, that Mahan Airways, Mahan Tower, No. 21, Azadegan St., M.A. Jenah Exp. Way, Tehran, Iran; Zarand Aviation A/K/A GIE Zarand Aviation, 42 Avenue Montaigne, 75008 Paris, France, and 112 Avenue Kleber, 75116 Paris, France; Gatewick LLC, A/K/A Gatewick Freight & Cargo Services, A/K/A Gatewick Aviation Service, G#22 Dubai Airport Free Zone, P.O. Box 393754, Dubai, United Arab Emirates, and P.O. Box 52404, Dubai, United Arab Emirates, and Mohamed Abdulla Alqaz Building, Al Maktoum Street, Al Rigga, Dubai, United Arab Emirates; Pejman Mahmood Kosarayanifard A/K/A Kosarian Fard, P.O. Box 52404, Dubai, United Arab Emirates; Mahmoud Amini, G#22 Dubai Airport Free Zone, P.O. Box 393754, Dubai, United Arab Emirates, and P.O. Box 52404, Dubai, United Arab Emirates, and Mohamed Abdulla Alqaz Building, Al Maktoum Street, Al Rigga, Dubai, United Arab Emirates; Kerman Aviation A/K/A GIE

Kerman Aviation, 42 Avenue Montaigne 75008, Paris, France; Sirjanco Trading LLC, P.O. Box 8709, Dubai, United Arab Emirates; and Ali Eslamian, 4th Floor, 33 Cavendish Square, London W1G0PW, United Kingdom, and 2 Bentinck Close, Prince Albert Road St. Johns Wood, London NW87RY, United Kingdom and when acting for or on their behalf, any successors or assigns, agents, or employees (each a ''Denied Person'' and collectively the ''Denied Persons'') may not, directly or indirectly, participate in any way in any transaction involving any commodity, software or technology (hereinafter collectively referred to as ''item'') exported or to be exported from the United States that is subject to the Export Administration Regulations (''EAR''), or in any other activity subject to the EAR including, but not limited to:

A. Applying for, obtaining, or using any license, License Exception, or export control document;

B. Carrying on negotiations concerning, or ordering, buying, receiving, using, selling, delivering, storing, disposing of, forwarding, transporting, financing, or otherwise servicing in any way, any transaction involving any item exported or to be exported from the United States that is subject to the EAR, or in any other activity subject to the EAR; or

C. Benefiting in any way from any transaction involving any item exported or to be exported from the United States that is subject to the EAR, or in any other activity subject to the EAR.

Second, that no person may, directly or indirectly, do any of the following:

A. Export or reexport to or on behalf of a Denied Person any item subject to the EAR;

B. Take any action that facilitates the acquisition or attempted acquisition by a Denied Person of the ownership, possession, or control of any item subject to the EAR that has been or will be exported from the United States, including financing or other support activities related to a transaction whereby a Denied Person acquires or attempts to acquire such ownership, possession or control;

C. Take any action to acquire from or to facilitate the acquisition or attempted acquisition from a Denied Person of any item subject to the EAR that has been exported from the United States;

D. Obtain from a Denied Person in the United States any item subject to the EAR with knowledge or reason to know that the item will be, or is intended to be, exported from the United States; or

E. Engage in any transaction to service any item subject to the EAR that has been or will be exported from the United States and which is owned, possessed or controlled by a Denied Person, or service any item, of whatever origin, that is owned, possessed or controlled by a Denied Person if such service involves the use of any item subject to the EAR that has been or will be exported from the United States. For purposes of this paragraph, servicing means installation, maintenance, repair, modification or testing.

Third, that, after notice and opportunity for comment as provided in section 766.23 of the EAR, any other person, firm, corporation, or business organization related to a Denied Person by affiliation, ownership, control, or position of responsibility in the conduct of trade or related services may also be made subject to the provisions of this Order.

Fourth, that this Order does not prohibit any export, reexport, or other transaction subject to the EAR where the only items involved that are subject to the EAR are the foreign-produced direct product of U.S.-origin technology.

In accordance with the provisions of Sections 766.24(e) and 766.23(c)(2) of the EAR, Mahan Airways, Zarand Aviation, Gatewick LLC, Mahmoud Amini, Kosarian Fard, Kerman Aviation, Sirjanco Trading LLC and/or Ali Eslamian may, at any time, appeal this Order by filing a full written statement in support of the appeal with the Office of the Administrative Law Judge, U.S. Coast Guard ALJ Docketing Center, 40 South Gay Street, Baltimore, Maryland 21202–4022.

In accordance with the provisions of Section 766.24(d) of the EAR, BIS may seek renewal of this Order by filing a written request not later than 20 days before the expiration date. A renewal request may be opposed by Mahan Airways and/or Zarand Aviation as provided in Section 766.24(d), by filing a written submission with the Assistant Secretary of Commerce for Export Enforcement, which must be received not later than seven days before the expiration date of the Order.

A copy of this Order shall be provided to Mahan Airways, Zarand Aviation and each related person and shall be published in the **Federal Register**. This Order is effective immediately and shall remain in effect for 180 days.

Dated: August 24, 2011.

Donald G. Salo, Jr.,

Deputy Assistant Secretary of Commerce for Export Enforcement.

[FR Doc. 2011–22284 Filed 8–30–11; 8:45 am]

BILLING CODE P

DEPARTMENT OF COMMERCE

International Trade Administration

[A–357–812]

Honey From Argentina: Preliminary Results of Antidumping Duty New Shipper Review

AGENCY: Import Administration, International Trade Administration, Department of Commerce.

SUMMARY: The Department of Commerce (the Department) is conducting a new shipper review (NSR) under the antidumping duty order on honey from Argentina in response to a request from Villamora S.A. (Villamora), an Argentine exporter of the subject merchandise. The domestic interested parties for this proceeding are the American Honey Producers Association and the Sioux Honey Association (collectively, petitioners).

We preliminarily find that the U.S. sale of subject merchandise exported by Villamora was *bona fide* and not sold below normal value (NV). If these preliminary results are adopted in our final results, the Department intends to instruct U.S. Customs and Border Protection (CBP) to assess antidumping duties on all appropriate entries covered by this review. *See* the ''Assessment Rate'' section of this notice. Interested parties are invited to comment on these preliminary results. *See* the ''Preliminary Results of Review'' section of this notice. The final results will be issued 90 days after the date of signature of these preliminary results, unless extended.

DATES: *Effective Date:* August 31, 2011.

FOR FURTHER INFORMATION CONTACT: Patrick Edwards or Ericka Ukrow, AD/CVD Operations, Office 7, Import Administration, International Trade Administration, U.S. Department of Commerce, 14th Street and Constitution Avenue, NW., Washington, DC 20230; *telephone:* (202) 482–8029 or (202) 482–0405, respectively.

SUPPLEMENTARY INFORMATION:

Background

The Department published the antidumping duty order on honey from Argentina on December 10, 2001. *See Notice of Antidumping Duty Order: Honey from Argentina*, 66 FR 63672 (December 10, 2001). On January 3, 2011, the Department received a timely filed request, dated December 31, 2010, from Villamora, in accordance with section 751(a)(2)(B) of the Tariff Act of 1930, as amended (the Act), and 19 CFR 351.214(b), to conduct a new shipper review of the antidumping duty order

on honey from Argentina. The Department found that the request for review met the statutory and regulatory requirements for initiation set forth in accordance with section 751(a)(2)(B) of the Act and 19 CFR 351.214(d), and initiated the review on January 25, 2011. *See Honey from Argentina: Notice of Initiation of Antidumping Duty New Shipper Review*, 76 FR 5332 (January 31, 2011) (*NSR Initiation*).

On February 7, 2011, the Department issued its new shipper questionnaire to Villamora. On March 14, 2011, Villamora submitted its section A response (AQR). On March 28, 2011, Villamora submitted its responses to sections B and C (BQR and CQR, respectively), and Appendix VIII (customer-specific) of the questionnaire. On May 16, 2011, the Department issued its first supplemental questionnaire to Villamora for which a response was filed on June 9, 2011. The Department also issued to Villamora a questionnaire regarding a ''particular market situation'' in Argentina on June 3, 2011, and a second supplemental questionnaire for sections A through C on June 22, 2011. Villamora submitted its response to the ''particular market situation'' questionnaire on June 29, 2011, and, in combination with its U.S. customer (through Villamora), submitted responses to the second supplemental questionnaire (SSQR) on June 29, 2011, and July 5, 2011.

On July 25, 2011, the Department extended the deadline for the preliminary results to August 23, 2011. *See Honey from Argentina: Extension of Time Limit for Preliminary Results of Antidumping Duty New Shipper Review*, 76 FR 44305 (July 25, 2011). Additionally, on July 28, 2011, the Department issued a third supplemental questionnaire to Villamora. On August 2, 2011, Villamora submitted its response to the third supplemental questionnaire (TSQR).

Scope of the Order

The merchandise subject to the order is honey from Argentina. For purposes of this order, the products covered are natural honey, artificial honey containing more than 50 percent natural honey by weight, preparations of natural honey containing more than 50 percent natural honey by weight, and flavored honey. The subject merchandise includes all grades and colors of honey whether in liquid, creamed, comb, cut comb, or chunk form, and whether packaged for retail or in bulk form.

The merchandise subject to the order is currently classifiable under subheadings 0409.00.00, 1702.90.90, and 2106.90.99 of the *Harmonized Tariff Schedule of the United States* (*HTSUS*). Although the *HTSUS* subheadings are provided for convenience and U.S. Customs and Border Protection (CBP) purposes, the Department's written description of the merchandise under this order is dispositive.

Bona Fides Analysis

Consistent with the Department's practice, we examined the *bona fides* of the new shipper sale at issue. In evaluating whether a sale in a NSR is commercially reasonable, and therefore *bona fide*, the Department considers, *inter alia*, such factors as: (1) The timing of the sale; (2) the price and quantity; (3) the expenses arising from the transaction; (4) whether the goods were resold at a profit; and (5) whether the transaction was made on an arm's-length basis. *See Tianjin Tiancheng Pharmaceutical Co., Ltd.* v. *United States*, 366 F. Supp. 2d 1246, 1250 (Ct. Int'l Trade 2005) (*TTPC*). Accordingly, the Department considers a number of factors in its *bona fides* analysis, ''all of which may speak to the commercial realities surrounding an alleged sale of subject merchandise.'' *See Hebei New Donghua Amino Acid Co., Ltd.* v. *United States*, 374 F. Supp. 2d 1333, 1342 (Ct. Int'l Trade 2005) (*New Donghua*) (citing *Fresh Garlic From the People's Republic of China: Final Results of Antidumping Administrative Review and Rescission of New Shipper Review,* 67 FR 11283 (March 13, 2002), and accompanying Issues and Decision Memorandum (*New Shipper Review of Clipper Manufacturing Ltd.*)). In *TTPC,* the court also affirmed the Department's decision that ''any factor which indicates that the sale under consideration is not likely to be typical of those which the producer will make in the future is relevant,'' (*TTPC*, 366 F. Supp. 2d at 1250), and found that ''the weight given to each factor investigated will depend on the circumstances surrounding the sale.'' *TTPC*, 366 F. Supp. 2d at 1263. Finally, in *New Donghua*, the Court of International Trade affirmed the Department's practice of evaluating the circumstances surrounding a NSR sale, so that a respondent does not unfairly benefit from an atypical sale and obtain a lower dumping margin than the producer's usual commercial practice would dictate.

Based on the totality of circumstances, we preliminarily find that the sale made by Villamora during the POR was a *bona fide* commercial transaction. The facts that led us to this preliminary conclusion include the following: (1) Neither the price nor quantity of the sale were outside normal bounds; (2) neither Villamora nor its customer incurred any extraordinary expenses arising from this transaction; (3) the sale was made between unaffiliated parties at arm's length; and (4) the timing of the sale does not indicate that the sale was not *bona fide.* Since much of the factual information used in our analysis of the *bona fides* of the transaction involves business proprietary information, a full discussion of the basis for our decision is set forth in the Memorandum to Angelica Mendoza, Program Manager, from Ericka Ukrow and Patrick Edwards, International Trade Compliance Analysts, regarding Bona Fide Nature of the Sale in the Antidumping Duty New Shipper Review of Honey from Argentina: Villamora S.A. (Bona Fides Memorandum), dated concurrently with this notice and on file in the Central Records Unit (CRU), room 7046 of the main Department of Commerce building. We will continue to examine the *bona fides* of Villamora's sale after the preliminary results.

Period of Review

The period of review (POR) for this NSR is December 1, 2009, through November 30, 2010.

Fair Value Comparisons

To determine whether Villamora's sale of subject merchandise from Argentina was made in the United States at less than NV, we compared the export price (EP) to the NV, as described in the ''U.S. Price'' and ''Normal Value'' section of this notice in accordance with section 777A(d)(2) of the Act.

Home Market Viability

In order to determine whether there is a sufficient volume of sales in the home market to serve as a viable basis for calculating NV (*i.e.*, the aggregate volume of home market sales of the foreign like product is five percent or more of the aggregate volume of U.S. sales), we compared the volume of Villamora's home market sales of the foreign like product to the volume of its U.S. sale of subject merchandise, in accordance with section 773(a)(1)(B)(ii)(II) of the Act. Based on this comparison, we determined that Villamora's home market was viable during the POR. However, section 773(a)(1)(C)(iii) of the Act provides that the Department may determine that home market sales are inappropriate as a basis for determining NV if a particular market situation would not permit a proper comparison with EP or constructed export price (CEP). After reviewing information provided by

Villamora regarding the honey industry in Argentina, the Department has determined that a ''particular market situation'' exists with respect to the honey market in Argentina during the POR for Villamora, rendering the Argentine market inappropriate for purposes of determining NV. *See* Memorandum to Richard Weible, Director AD/CVD Operations, Office 7, from Patrick Edwards and Ericka Ukrow, entitled ''Whether a particular market situation exists such that the Argentine honey market is not an appropriate comparison market for establishing normal value,'' dated August 24, 2011 (Particular Market Situation Memorandum). *See also* the discussion of ''Selection of Comparison Market'' under ''Normal Value'' below.

Product Comparisons

Pursuant to section 771(16)(A) of the Act, for purposes of determining appropriate product comparisons to the U.S. sales, the Department considers all products, as described in the ''Scope of the Order'' section of this notice above, that were sold in the comparison or third-country market in the ordinary course of trade. In accordance with sections 771(16)(B) and (C) of the Act, where there are no sales of identical merchandise in the comparison or third-country market made in the ordinary course of trade, we compare U.S. sales to sales of the most similar foreign like product based on the characteristics listed in sections B and C of our antidumping questionnaire: Type, grade or color, and form. We found that Villamora had sales of foreign like product that were identical in these respects to the merchandise sold in the United States, and therefore compared the U.S. product with the identical merchandise sold in the third-country market, *i.e.*, Germany, based on the characteristics listed above, in that order of priority.[1]

Date of Sale

Pursuant to 19 CFR 351.401(i), the Department will normally use the date of invoice as the date of sale, unless a different date better reflects the date on which the material terms of sale are established. In its initial response, Villamora reported invoice date as the date of sale for its third-country market sales and its U.S. sale. Moreover, Villamora reported that for both markets, it issues the invoice concurrently with the departure of the vessel. *See* Villamora's BQR at 10 and CQR at 9. In its first supplemental questionnaire reponse (FSQR), dated June 9, 2011, Villamora clarified that while the purchase order generally sets the expected terms of sale, such orders are subject to change prior to shipment. Furthermore, Villamora notes that the quantity specified in the purchase order is not always identical to the actual quantity shipped. *See* Villamora's FSQR, dated June 9, 2011, at 16–18. Accordingly, we preliminarily find that there is potential for change to the essential terms of sale between the order date and invoice date, and therefore, invoice date continues to be the appropriate date of sale with respect to Villamora's sales to the U.S. and third-country markets. However, during the POR, for all of Villamora's sales, shipment occurred prior to invoice and, consistent with past segments of this proceeding and the Department's practice, we used the shipment date as the date of sale. *See Stainless Steel Sheet and Strip in Coils from the Republic of Korea: Preliminary Results and Partial Rescission of Antidumping Duty Administrative Review*, 71 FR 18074, 18079–80 (April 10, 2006), unchanged in *Stainless Steel Sheet and Strip in Coils from the Republic of Korea; Final Results and Rescission of Antidumping Duty Administrative Review in Part*, 72 FR 4486 (January 31, 2007), and the accompanying Issues and Decision Memorandum at Comments 4 and 5; *Certain Cold-Rolled and Corrosion-Resistant Carbon Steel Flat Products From Korea: Final Results of Antidumping Duty Administrative Reviews*, 63 FR 13170, 13172–73 (March 18, 1998).

U.S. Price

Section 772(a) of the Act defines EP as ''the price at which the subject merchandise is first sold (or agreed to be sold) before the date of importation by the producer or exporter of subject merchandise outside of the United States to an unaffiliated purchaser in the United States or to an unaffiliated purchaser for exportation to the United States, as adjusted under (section 772(c) of the Act).'' Section 772(b) of the Act defines CEP as ''the price at which the subject merchandise is first sold (or agreed to be sold) in the United States before or after the date of importation by or for the account of the producer or exporter of such merchandise or by a seller affiliated with the producer or exporter, to a purchaser not affiliated with the producer or exporter,'' as adjusted under sections 772(c) and (d) of the Act. For purposes of this new shipper review, Villamora classified their U.S. sale as EP because this sale was made before the date of importation directly to an unaffiliated customer in the U.S. market. For purposes of these preliminary results, we have accepted this classification. We calculated EP using the price Villamora charged its unaffiliated customer. We made deductions and adjustments, where appropriate, for movement expenses, export taxes, inland insurance, shipping revenues, brokerage and handling, and other expenses incurred in Argentina.

Information about the specific adjustments and our analysis of the adjustments is business proprietary, and is detailed in the Memorandum to The File, through Angelica Mendoza, Program Manager, from Patrick Edwards and Ericka Ukrow, International Trade Compliance Analysts, Analysis Memorandum for the Preliminary Results of the Antidumping Duty New Shipper Review of Honey from Argentina: Villamora S.A., dated concurrently with this notice (Preliminary Analysis Memorandum).

Normal Value

1. Selection of Comparison Market

In accordance with section 773(a)(1)(C) of the Act, to determine whether there was a sufficient volume of sales in the home market to serve as a viable basis for calculating NV (*i.e.,* the aggregate volume of home market sales of the foreign like product is greater than or equal to five percent of the aggregate volume of U.S. sales), we compared Villamora's aggregate volume of home market sales of the foreign like product to its aggregate volume of U.S. sales of subject merchandise. Villamora's volume of home market sales were greater than five percent of the aggregate volume of U.S. sales. However, section 773(a)(1)(C)(iii) of the Act provides that the Department may determine that home market sales are inappropriate as a basis for determining NV if a particular market situation would not permit a proper comparison with EP and CEP.

As noted above, the Department determined that a particular market situation does, in fact, exist with respect to Villamora's sales of honey in Argentina, rendering the Argentine market inappropriate for purposes of determining NV. *See* Particular Market Situation Memorandum.

When sales in the home market are not suitable to serve as the basis for NV, section 773(a)(1)(B)(ii) of the Act provides that sales to a third-country market may be utilized if: (i) The prices in such market are representative; (ii) the aggregate quantity of the foreign like product sold by the producer or exporter in the third-country market is

[1] *See* ''Selection of Comparison Market'' section below.

five percent or more of the aggregate quantity of the subject merchandise sold in or to the United States; and (iii) the Department does not determine that a particular market situation in the third-country market prevents a proper comparison with the EP or CEP. In terms of volume of sales (and with five percent or more of sales by quantity to the United States), Villamora reported Germany as its largest third-country market during the POR.

The Department preliminarily finds there is no evidence on the record to demonstrate that these prices in Germany are not representative. *See* Villamora's AQR at Exhibit A.1. In addition, the record shows the aggregate quantity of Villamora's sales to Germany is greater than five percent of Villamora's sales to the United States. Nor is there evidence that any other third-country market to which Villamora sells would offer greater similarity of product to that sold to the United States. Further, we find there is no particular market situation in Germany with respect to Villamora or the general honey market that would prevent a proper comparison to EP. As a result, we preliminarily find Villamora's sales to Germany serve as the most appropriate basis for NV.

In addition to looking at volume, we also examined and found product similarity between Villamora's product sold to the largest third-country market and the product sold to the United States. Thus, the Department determines to select Germany as the appropriate comparison market for Villamora.

Therefore, Villamora's NV is based on its German sales to unaffiliated purchasers made in commercial quantities and in the ordinary course of trade. For NV, we used the prices at which the foreign like product was first sold for consumption in the usual commercial quantities, in the ordinary course of trade, and at the same level of trade (LOT) as the EP. *See* ''Level of Trade'' section below. We calculated NV as noted in the relevant section of this notice, *infra.*

2. Affiliated Entities

Villamora claimed in its responses that Enzo Juan Garaventa is affiliated with Villamora. *See* Villamora's AQR at A–9; *see also* Villamora's response to the Department's letter titled ''Antidumping Duty New Shipper Review of Honey from Argentina: Treatment of Certain Information as Business Proprietary,'' dated July 25, 2011. Much of the discussion concerning Villamora and its affiliate, Enzo Juan Garaventa, is proprietary in nature. Therefore, for a complete analysis of the affiliation that exists between the two entities, *see* Memorandum to Richard Weible, Office Director, from Patrick Edwards and Ericka Ukrow, International Trade Compliance Analysts, titled ''Antidumping Duty New Shipper Review of Honey from Argentina: Analysis of the Relationship Between Villamora S.A. (Villamora) and Enzo Juan Garaventa (Garaventa),'' dated August 24, 2011 (Affiliation and Collapsing Memorandum). As a result of our analysis and pursuant to section 771(33)(E) of the Act and 19 CFR 351.102(b)(3), we preliminarily find that Villamora and Enzo Juan Garaventa are affiliated.

Pursuant to 19 CFR 351.401(f), the Department will treat two or more affiliated producers as a single entity where: (1) Those producers have production facilities for similar or identical product that would not require substantial retooling of either facility; and (2) there is a significant potential for manipulation of price or production. Evidence on the record shows that Enzo Juan Garaventa and Villamora produce similar or identical merchandise. Additionally, the nature of their affiliation, as well as Enzo Juan Garaventa's involvement in several aspects of Villamora's operations, demonstrates a significant potential for manipulation of price and/or production between the two entities. Therefore, for purposes of this new shipper review, the Department has also preliminarily determined that it is appropriate to treat Enzo Juan Garaventa and Villamora as a single entity, pursuant to 19 CFR 351.401(f)(1) and (2). For a more detailed discussion of our collapsing analysis, *see* Affiliation and Collapsing Memorandum.

Level of Trade

In accordance with section 773(a)(1)(B)(i) of the Act, to the extent practicable, we determine NV based on sales in the comparison market at the same LOT as the EP or CEP sales in the U.S. market. For further discussion of our LOT analysis, *see* Preliminary Analysis Memorandum.

After analyzing the information on the record with respect to these selling functions, we preliminarily find that all reported sales are made at the same LOT. For a further discussion of LOT, *see* ''Level of Trade'' section in the Preliminary Analysis Memorandum.

Calculation of Normal Value

We based NV on the third-country prices to unaffiliated customers in Germany. Pursuant to section 773(a)(6)(B)(ii) of the Act, we made adjustments, where applicable, for movement expenses (*i.e.*, inland freight, export taxes, and shipping revenues). In accordance with section 773(a)(6)(C)(iii) of the Act and 19 CFR 351.410(c), we made, where appropriate, circumstance-of-sale adjustments for third-country market and U.S. direct selling expenses including imputed credit and warranty expenses. *See* Preliminary Analysis Memorandum.

Currency Conversion

The Department's preferred source for daily exchange rates is the Federal Reserve Bank. *See Preliminary Results of Antidumping Duty Administrative Review: Stainless Steel Sheet and Strip in Coils from France,* 68 FR 47049, 47055 (August 7, 2003) (unchanged in *Notice of Final Results of Antidumping Duty Administrative Review: Stainless Steel Sheet and Strip in Coils From France,* 68 FR 69379 (December 12, 2003)). However, the Federal Reserve Bank does not track or publish exchange rates for the Argentine peso. Therefore, we made currency conversions from Argentine pesos to U.S. dollars based on the daily exchange rates from Factiva, a Dow Jones retrieval service. Factiva publishes exchange rates for Monday through Friday only. We used the rate of exchange on the most recent Friday for conversion dates involving Saturday through Sunday where necessary.

Preliminary Results of New Shipper Review

As a result of our review, we preliminarily find, in accordance with 19 CFR 351.214(i)(1), that the following weighted-average dumping percentage margin exists for Enzo Juan Garaventa/Villamora for the period December 1, 2009, through November 30, 2010:

Manufacturer/Exporter	Weighted-Average margin (percent)
Enzo Juan Garaventa or Villamora S.A./Enzo Juan Garaventa or Villamora S.A. ...	0.00

Assessment Rate

Upon completion of this new shipper review, the Department shall determine, and CBP shall assess, antidumping duties on all appropriate entries, in accordance with 19 CFR 351.212(b). The Department intends to issue assessment instructions for Enzo Juan Garaventa/Villamora directly to CBP 15 days after the date of publication of the final results of this new shipper review.

Pursuant to 19 CFR 351.212(b)(1), we will calculate an importer-specific assessment rate on the basis of the ratio

of the total amount of antidumping duties calculated for the examined sales and the total entered value of the examined sales. We will instruct CBP to assess antidumping duties on all appropriate entries covered by this review if the importer-specific assessment rate calculated in the final results of this review is above *de minimis* (*i.e.*, at or above 0.50 percent). Pursuant to 19 CFR 351.106(c)(2), we intend to instruct CBP to liquidate without regard to antidumping duties any entries for which the assessment rate is zero or *de minimis* (*i.e.*, less than 0.50 percent). *See* 19 CFR 351.106(c)(1).

Cash Deposit Requirements

The following cash deposit requirements will be effective for all shipments of the subject merchandise entered, or withdrawn from warehouse, for consumption on or after the publication date of the final results of this new shipper review, as provided by section 751(a)(2)(C) of the Act: (1) The cash deposit rate for subject merchandise that is manufactured by Enzo Juan Garaventa or Villamora and exported by Enzo Juan Garaventa or Villamora will be the rate established in the final results of this new shipper review, except no cash deposit will be required if its weighted-average margin is *de minimis* (*i.e.*, less than 0.5 percent); (2) if the exporter is not a firm covered in this review, but was covered in a previous review or the original less-than-fair-value (LTFV) investigation, the cash deposit rate will continue to be the company-specific rate published for the most recent period; (3) if the exporter is not a firm covered in this review, a previous review, or the original LTFV investigation, but the manufacturer is, the cash deposit rate will be the rate established for the most recent period for the manufacturer of the merchandise; and (4) the cash deposit rate for all other manufacturers and/or exporters of this merchandise, shall be 30.24 percent, the all-others rate established in the LTFV investigation. *See Notice of Antidumping Duty Order; Honey From Argentina*, 66 FR 63672 (December 10, 2001). These requirements, when imposed, shall remain in effect until further notice.

Further, effective upon publication of the final results, we intend to instruct CBP that importers may no longer post a bond or other security in lieu of a cash deposit on imports of honey from Argentina, manufactured by Enzo Juan Garaventa or Villamora and exported by Enzo Juan Garaventa or Villamora. These cash deposit requirements, when imposed, shall remain in effect until further notice.

Disclosure and Public Hearing

The Department will disclose to parties the calculations performed in connection with these preliminary results within five days of the date of public announcement. *See* 19 CFR 351.224(b). Unless notified by the Department, pursuant to 19 CFR 351.309(c)(ii), interested parties may submit cases briefs not later than 30 days after the date of publication of this notice. Rebuttal briefs, limited to issues raised in the case briefs, may be filed not later than five days after the deadline for filing the case briefs. *See* 19 CFR 351.309(d). Parties who submit case briefs or rebuttal briefs in this proceeding are requested to submit with each argument: (1) A statement of the issue; (2) a brief summary of the argument; and (3) a table of authorities. Additionally, parties are requested to provide their case briefs and rebuttal briefs in electronic format (*e.g.*, WordPerfect, Microsoft Word, Adobe Acrobat, *etc.*).

Interested parties who wish to request a hearing or to participate if one is requested must submit a written request to the Assistant Secretary for Import Administration within 30 days of the date of publication of this notice. Requests should contain: (1) The party's name, address and telephone number; (2) the number of participants; and (3) a list of issues to be discussed. Issues raised in the hearing will be limited to those raised in the case and rebuttal briefs. *See* 19 CFR 351.310(c).

Beginning August 5, 2011, with certain limited exceptions, interested parties are required to file electronically all submissions for all proceedings using Import Administration's Antidumping and Countervailing Duty Centralized Electronic Service System (IA ACCESS). An electronically-filed document must be successfully received in its entirety by the Department's electronic records system, IA ACCESS, by the time and date of the above-referenced deadline for the submission of case briefs. Documents excepted from the electronic submission requirements, must be filed manually (*i.e.*, in paper form) with the APO/Dockets Unit in Room 1870 and stamped with the date and time of receipt by the deadline. *See Antidumping and Countervailing Duty Proceedings: Electronic Filing Procedures; Administrative Protective Order Procedures*, 76 FR 39263 (July 6, 2011).[2]

The Department will issue the final results of this review, including the results of its analysis of issues raised in any written briefs, within 90 days of signature of these preliminary results, unless the final results are extended. *See* section 751(a)(2)(B)(iv) of the Act.

Notification to Importers

This notice serves as a preliminary reminder to importers of their responsibility under 19 CFR 351.402(f)(2) to file a certificate regarding the reimbursement of antidumping duties prior to liquidation of the relevant entries during this review period. Failure to comply with this requirement could result in the Secretary's presumption that reimbursement of antidumping duties occurred and the subsequent assessment of double antidumping duties.

This new shipper review is issued and published in accordance with sections 751(a)(2)(B)(iv) and 777(i)(1) of the Act, as well as 19 CFR 351.214(i).[3]

Dated: August 24, 2011.

Ronald K. Lorentzen,

Deputy Assistant Secretary for Import Administration.

[FR Doc. 2011–22332 Filed 8–30–11; 8:45 am]

BILLING CODE 3510–DS–P

[2] Available online at *http://www.gpo.gov/fdsys/pkg/FR-2011-07-06/pdf/2011-16352.pdf.*

[3] There was an earthquake on Tuesday, August 23, 2011, which resulted in the Commerce building being closed from 2 pm until COB on that day. Because the closure affected our ability to issue this determination within the statutory deadline, we have tolled the deadline by one day.

DEPARTMENT OF COMMERCE

International Trade Administration

[A–588–815]

Gray Portland Cement and Clinker From Japan: Final Results of the Expedited Third Sunset Review of the Antidumping Duty Order

AGENCY: Import Administration, International Trade Administration, Department of Commerce.

SUMMARY: The Department has conducted an expedited (120-day) third sunset review of the antidumping duty order on gray portland cement and clinker from Japan. As a result of this third sunset review, the Department finds that revocation of the antidumping duty order would be likely to lead to continuation or recurrence of dumping as indicated in the ''Final Results of Review'' section of this notice.

DATES: *Effective Date:* August 31, 2011.

FOR FURTHER INFORMATION CONTACT: Catherine Cartsos or Minoo Hatten, AD/CVD Operations, Office 5, Import Administration, International Trade Administration, U.S. Department of Commerce, 14th Street and Constitution

Avenue, NW., Washington, DC 20230; telephone: (202) 482–1757 or (202) 482–1690, respectively.

SUPPLEMENTARY INFORMATION:

Background

On May 2, 2011, the Department published the notice of initiation of the third sunset review of the antidumping duty order on gray portland cement and clinker from Japan [1] pursuant to section 751(c) of the Tariff Act of 1930, as amended (the Act). See *Initiation of Five-Year (''Sunset'') Review,* 76 FR 24459 (May 2, 2011) (*Notice of Initiation*).

The Department received notice of intent to participate in this third sunset review from the domestic interested party, Committee for Fairly Traded Japanese Cement (domestic interested party), within the 15-day period specified in 19 CFR 351.218(d)(1)(i). The domestic interested party claimed interested-party status under section 771(9)(E) of the Act as a trade or business association, a majority of whose members manufacture, produce or wholesale a domestic like product in the United States.

The Department received a complete substantive response to the *Notice of Initiation* from the domestic interested party within the 30-day period specified in 19 CFR 351.218(d)(3)(i). The Department received no responses from any respondent interested parties. In accordance with section 751(c)(3)(B) of the Act and 19 CFR 351.218(e)(1)(ii)(C)(2), the Department is conducting an expedited (120-day) third sunset review of the antidumping duty order on gray portland cement and clinker from Japan.

Scope of the Order

The products covered by the order are cement and cement clinker from Japan. Cement is a hydraulic cement and the primary component of concrete. Cement clinker, an intermediate material produced when manufacturing cement, has no use other than grinding into finished cement. Microfine cement was specifically excluded from the antidumping duty order. Cement is currently classifiable under the Harmonized Tariff Schedule (HTS) item number 2523.29 and cement clinker is currently classifiable under HTS item number 2523.10. Cement has also been entered under HTS item number 2523.90 as ''other hydraulic cements.'' The HTS item numbers are provided for convenience and customs purposes. The written product description remains dispositive as to the scope of the product covered by the order.[2]

Analysis of Comments Received

All issues raised in this review are addressed in the ''Issues and Decision Memorandum for the Final Results of the Expedited Third Sunset Review of the Antidumping Duty Order on Gray Portland Cement and Clinker from Japan'' from Christian Marsh, Deputy Assistant Secretary for Antidumping and Countervailing Duty Operations, to Ronald K. Lorentzen, Deputy Assistant Secretary for Import Administration, dated concurrently with this notice (I&D Memo), which is hereby adopted by this notice. The issues discussed in the I&D Memo include the likelihood of continuation or recurrence of dumping and the magnitude of the dumping margins likely to prevail if the order was revoked. Parties can find a complete discussion of all issues raised in this review and the corresponding recommendations in this public memorandum which is on file in the Central Records Unit, room 7046 of the main Department of Commerce building.

In addition, a complete version of the I&D Memo can be accessed directly on the Web at *http://ia.ita.doc.gov/frn.* The paper copy and electronic version of the I&D Memo are identical in content.

Final Results of Review

The Department determines that revocation of the antidumping duty order on gray portland cement and clinker from Japan would be likely to lead to continuation or recurrence of dumping at the following weighted-average dumping margins:

Company	Weighted-Average dumping margin (percent)
Onoda Cement Company, Ltd ...	70.52
Nihon Cement Company, Ltd	69.89
All Other Manufacturers/Producers/Exporters	70.23

Notification Regarding APO

This notice serves as a reminder to parties subject to administrative protective order (APO) of their responsibility concerning the disposition of proprietary information disclosed under APO in accordance with 19 CFR 351.305(a). Timely written notification of the destruction of APO materials or conversion to judicial protective order is hereby requested. Failure to comply with the regulations and terms of an APO is a violation which is subject to sanction.

The Department is issuing and publishing the final results and notice in accordance with sections 751(c), 752(c), and 777(i)(1) of the Act.

Dated: August 18, 2011.

Christian Marsh,

Acting Deputy Assistant Secretary for Import Administration.

[FR Doc. 2011–22334 Filed 8–30–11; 8:45 am]

BILLING CODE 3510–DS–P

DEPARTMENT OF COMMERCE

International Trade Administration

[A–475–822]

Stainless Steel Plate in Coils From Italy: Revocation of Antidumping Duty Order

AGENCY: Import Administration, International Trade Administration, Department of Commerce.

SUMMARY: On June 2, 2010, the Department of Commerce (the Department) initiated a second sunset review of the antidumping duty order on stainless steel plate in coils (SSPC) from Italy. See Initiation of Five-Year (''Sunset'') Review, 75 FR 30777 (June 2, 2010) (Initiation). Pursuant to section 751(c) of the Tariff Act of 1930, as amended (the Act), the International Trade Commission (ITC) determined that revocation of this order would not be likely to lead to continuation or recurrence of material injury to an industry in the United States within a reasonably foreseeable time. See Stainless Steel Plate From Belgium, Italy, Korea, South Africa, and Taiwan, 76 FR 50495 (August 15, 2011) (ITC Final). Therefore, pursuant to section 751(d)(2) of the Act and 19 CFR 351.222(i)(1)(iii), the Department is revoking the antidumping duty order on SSPC from Italy.

DATES: *Effective Date:* July 18, 2010.

FOR FURTHER INFORMATION CONTACT: Hector Rodriguez or Elizabeth Eastwood, AD/CVD Operations, Office 2, Import Administration, International

---

[1] See *Antidumping Duty Order and Amendment to Final Determination of Sales at Less Than Fair Value: Gray Portland Cement and Clinker From Japan,* 56 FR 21658 (May 10, 1991), and *Amended Final Determination of Sales at Less Than Fair Value and Antidumping Order: Gray Portland Cement and Clinker From Japan,* 60 FR 39150 (August 1, 1995).

[2] The Department has made two scope rulings regarding subject merchandise. See *Scope Rulings,* 57 FR 19602 (May 7, 1992) (classes G and H of oil well cement are within the scope of the order), and *Scope Rulings,* 58 FR 27542 (May 10, 1993) (''Nittetsu Super Fine'' cement is not within the scope of the order).

Trade Administration, U.S. Department of Commerce, 14th Street and Constitution Avenue, NW., Washington, DC 20230; *telephone:* (202) 482–0629 or (202) 482–3874.

SUPPLEMENTARY INFORMATION:

Background

On June 2, 2010, the Department published the notice of initiation of the sunset reviews of the antidumping duty orders on SSPC from Belgium, Italy, Korea, South Africa, and Taiwan pursuant to section 751(c) of the Act. See Initiation.

On July 20, 2011, the ITC determined, pursuant to section 751(c) of the Act, that revocation of this order would not be likely to lead to continuation or recurrence of material injury to an industry in the United States within a reasonably foreseeable time. See ITC Final and Stainless Steel Plate in Coils from Belgium, Italy, Korea, South Africa, and Taiwan (Inv. Nos. 701–TA–379 and 731–TA–788, 790–793 (Second Review), USITC Publication 4248 (Aug. 2011).

Scope of the Order

Stainless steel is an alloy steel containing, by weight, 1.2 percent or less of carbon and 10.5 percent or more of chromium, with or without other elements. The subject plate products are flat-rolled products, 254 mm or over in width and 4.75 mm or more in thickness, in coils, and annealed or otherwise heat treated and pickled or otherwise descaled. The subject plate may also be further processed (*e.g.,* cold-rolled, polished, *etc.*) provided that it maintains the specified dimensions of plate following such processing. Excluded from the scope of the order are the following: (1) Plate not in coils, (2) plate that is not annealed or otherwise heat treated and pickled or otherwise descaled, (3) sheet and strip, and (4) flat bars.

The merchandise subject to the order is currently classifiable in the Harmonized Tariff Schedule of the United States (HTSUS) at subheadings: 7219.11.00.30, 7219.11.00.60, 7219.12.00.06, 7219.12.00.21, 7219.12.00.26, 7219.12.00.51, 7219.12.00.56, 7219.12.00.66, 7219.12.00.71, 7219.12.00.81, 7219.31.00.10, 7219.90.00.10, 7219.90.00.20, 7219.90.00.25, 7219.90.00.60, 7219.90.00.80, 7220.11.00.00, 7220.20.10.10, 7220.20.10.15, 7220.20.10.60, 7220.20.10.80, 7220.20.60.05, 7220.20.60.10, 7220.20.60.15, 7220.20.60.60, 7220.20.60.80, 7220.90.00.10, 7220.90.00.15, 7220.90.00.60, and 7220.90.00.80. Although the HTSUS subheadings are provided for convenience and customs purposes, the written description of the merchandise subject to the order is dispositive.

Revocation

As a result of the determination by the ITC that revocation of the order is not likely to lead to the continuation or recurrence of material injury to an industry in the United States, the Department, pursuant to section 751(d) of the Act, is revoking the antidumping duty order on SSPC from Italy. Pursuant to section 751(d)(2) of the Act and 19 CFR 351.222(i)(2)(i), the effective date of revocation is July 18, 2010 (*i.e.,* the fifth anniversary of the date of publication in the **Federal Register** of the notice of continuation of the antidumping duty order). The Department will notify U.S. Customs and Border Protection (CBP) to discontinue suspension of liquidation and collection of cash deposits on entries of SSPC from Italy entered or withdrawn from warehouse on or after July 18, 2010, the effective date of revocation of the antidumping duty order. The Department will further instruct CBP to refund with interest any cash deposits on entries made on or after July 18, 2010.

This revocation and notice are issued in accordance with section 751(d)(2) of the Act and published pursuant to section 777(i)(1) of the Act and 19 CFR 351.222(i)(2).

Dated: August 22, 2011.

Ronald K. Lorentzen,

Deputy Assistant Secretary for Import Administration.

[FR Doc. 2011–22153 Filed 8–30–11; 8:45 am]

BILLING CODE 3510–DS–M

DEPARTMENT OF COMMERCE

International Trade Administration

[A–570–890]

Wooden Bedroom Furniture From the People's Republic of China: Initiation of Antidumping Duty New Shipper Review

AGENCY: Import Administration, International Trade Administration, Department of Commerce.

DATES: *Effective Date:* August 31, 2011.

SUMMARY: The Department of Commerce (''Department'') has determined that a request for a new shipper review of the antidumping duty order on wooden bedroom furniture from the People's Republic of China (''PRC'') meets the statutory and regulatory requirements for initiation. The period of review (''POR'') for the new shipper review is January 1, 2011, through June 30, 2011.

FOR FURTHER INFORMATION CONTACT: Patrick O'Connor or Rebecca Pandolph, AD/CVD Operations, Office 4, Import Administration, International Trade Administration, U.S. Department of Commerce, 14th Street and Constitution Avenue, NW., Washington, DC 20230; telephone: (202) 482–0989 or (202) 482–3627 respectively.

SUPPLEMENTARY INFORMATION:

Background

The antidumping duty order on wooden bedroom furniture from the PRC was published on January 4, 2005. *See Notice of Amended Final Determination of Sales at Less Than Fair Value and Antidumping Duty Order: Wooden Bedroom Furniture From the People's Republic of China,* 70 FR 329 (January 4, 2005). On August 1, 2011, pursuant to section 751(a)(2)(B)(i) of the Tariff Act of 1930, as amended (the ''Act''), and 19 CFR 351.214(c), the Department received a timely request for a new shipper review from Marvin Furniture (Shanghai) Co. Ltd. (''Marvin''). On August 11, 2011, and August 19, 2011, the Department issued supplemental questionnaires to Marvin. On August 19, 2011, Marvin submitted its response to the August 11, 2011 supplemental questionnaire. On August 19, 2011, the Department placed entry data received from U.S. Customs and Border Protection (''CBP'') on the record of this proceeding and provided interested parties with an opportunity to comment on the data. On August 24, 2011, Marvin commented on the CBP data and requested an extension to file its response to the August 19, 2011 supplemental questionnaire.

Marvin stated that it is both the exporter and producer of the subject merchandise upon which its request for a new shipper review is based. Pursuant to section 751(a)(2)(B)(i)(I) of the Act and 19 CFR 351.214(b)(2)(i), Marvin certified that it did not export wooden bedroom furniture to the United States during the period of investigation (''POI''). In addition, pursuant to section 751(a)(2)(B)(i)(II) of the Act and 19 CFR 351.214(b)(2)(iii)(A), Marvin certified that, since the initiation of the investigation, it has never been affiliated with any PRC exporter or producer who exported wooden bedroom furniture to the United States during the POI, including those not individually examined during the investigation. As required by 19 CFR 351.214(b)(2)(iii)(B), Marvin also certified that its export activities were not controlled by the central government of the PRC. *See*

generally, Memorandum to the File through Abdelali Elouaradia, Director, AD/CVD Operations, Office 4: Initiation of Antidumping New Shipper Review of Wooden Bedroom Furniture from the People's Republic of China: Marvin Furniture (Shanghai) Co. Ltd.: (''Initiation Checklist''), dated concurrently with this notice.

In addition to the certifications described above, pursuant to 19 CFR 351.214(b)(2)(iv), Marvin submitted documentation establishing the following: (1) The date on which it first shipped wooden bedroom furniture for export to the United States and the date on which the wooden bedroom furniture was first entered, or withdrawn from warehouse, for consumption; (2) the volume of its first shipment; and (3) the date of its first sale to an unaffiliated customer in the United States. *See generally,* Initiation Checklist.

The Department conducted a CBP database query and confirmed by examining the results of the CBP data query that Marvin's subject merchandise entered the United States during the POR specified by the Department's regulations. *See* 19 CFR 351.214(g)(1)(i)(A). Pursuant to 19 CFR 351.221(c)(1)(i), the Department will publish the notice of initiation of a new shipper review no later than the last day of the month following the anniversary or semiannual anniversary month of the order.

Initiation of New Shipper Review

Pursuant to section 751(a)(2)(B) of the Act, 19 CFR 351.214(b), and the information on the record, the Department finds that Marvin meets the threshold requirements for initiation of a new shipper review of its shipment(s) of wooden bedroom furniture from the PRC. *See generally,* Initiation Checklist. The POR for the new shipper review of Marvin is January 1, 2011, through June 30, 2011. *See* 19 CFR 351.214(g)(1)(i)(B). The Department intends to issue the preliminary results of this review no later than 180 days from the date of initiation, and the final results of this review no later than 270 days from the date of initiation. *See* section 751(a)(2)(B)(iv) of the Act.

It is the Department's usual practice, in cases involving non-market economies, to require that a company seeking to establish eligibility for an antidumping duty rate separate from the country-wide rate provide evidence of *de jure* and *de facto* absence of government control over the company's export activities. Accordingly, we will issue a questionnaire to Marvin which will include a separate rate section. The review of the exporter will proceed if the response provides sufficient indication that the exporter is not subject to either *de jure* or *de facto* government control with respect to its exports of wooden bedroom furniture.

We will instruct CBP to allow, at the option of the importer, the posting, until the completion of the review, of a bond or security in lieu of a cash deposit for certain entries of the subject merchandise from Marvin in accordance with section 751(a)(2)(B)(iii) of the Act and 19 CFR 351.214(e). Because Marvin stated that it both produces and exports the subject merchandise, the sales of which form the basis for its new shipper review request, we will instruct CBP to permit the use of a bond only for entries of subject merchandise which the respondent both produced and exported.

Interested parties requiring access to proprietary information in this new shipper review should submit applications for disclosure under administrative protective order in accordance with 19 CFR 351.305 and 351.306.

This initiation and notice are published in accordance with section 751(a)(2)(B) of the Act and 19 CFR 351.214 and 351.221(c)(1)(i).

Dated: August 25, 2011.

Christian Marsh,

Deputy Assistant Secretary for Antidumping and Countervailing Duty Operations.

[FR Doc. 2011–22327 Filed 8–30–11; 8:45 am]

BILLING CODE 3510–DS–P

DEPARTMENT OF COMMERCE

International Trade Administration

[C–580–818]

Corrosion-Resistant Carbon Steel Flat Products From the Republic of Korea: Preliminary Results of Countervailing Duty Administrative Review

AGENCY: Import Administration, International Trade Administration, Department of Commerce.

SUMMARY: The Department of Commerce (the Department) is conducting an administrative review of the countervailing duty (CVD) order on corrosion-resistant carbon steel flat products (CORE) from the Republic of Korea (Korea) for the period of review (POR) January 1, 2009, through December 31, 2009. For information on the net subsidy for Hyundai HYSCO Ltd. (HYSCO), the company reviewed, see the ''Preliminary Results of Review'' section of this notice. Interested parties are invited to comment on these preliminary results. *See* the ''Public Comment'' section of this notice.

DATES: *Effective Date:* August 31, 2011.

FOR FURTHER INFORMATION CONTACT: Gayle Longest, AD/CVD Operations, Office 3, Import Administration, International Trade Administration, U.S. Department of Commerce, Room 4014, 14th Street and Constitution Ave., NW., Washington, DC 20230; telephone: (202) 482–3338.

SUPPLEMENTARY INFORMATION:

Background

On August 17, 1993, the Department published in the **Federal Register** the CVD order on CORE from Korea. *See Countervailing Duty Orders and Amendments of Final Affirmative Countervailing Duty Determinations: Certain Steel Products from Korea*, 58 FR 43752 (August 17, 1993). On August 2, 2010, the Department published a notice of opportunity to request an administrative review of this CVD order. *See Antidumping or Countervailing Duty Order, Finding, or Suspended Investigation: Opportunity to Request Administrative Review*, 75 FR 45094 (August 2, 2010).

On August 31, 2010, we received timely requests for review and partial revocation of the countervailing duty order from Dongbu Steel Co., Ltd. (Dongbu) and Pohang Iron and Steel Co., Ltd. (POSCO); we also received a timely request for review from Hyundai HYSCO Ltd. On September 29, 2010, the Department published a notice of initiation of the administrative review of the CVD order on CORE from Korea covering the period January 1, 2009, through December 31, 2009. *See Initiation of Antidumping and Countervailing Duty Administrative Reviews and Requests for Revocation in Part* (*Initiation*), 75 FR 60076 (September 29, 2010).

On September 27, 2010, and October 1, 2010, Dongbu and POSCO, respectively, withdrew their requests for review and partial revocation of the CVD order on CORE from Korea. On January 25, 2011, we rescinded, in part, this review of the CVD order of CORE from Korea with regard to Dongbu and POSCO. *See Corrosion-Resistant Carbon Steel Flat Products From the Republic of Korea: Partial Rescission of Countervailing Duty Administrative Review*, 76 FR 4291 (January 25, 2011).

On October 18, 2010, the Department issued the initial questionnaire to HYSCO, and the Government of Korea (GOK). On December 15, 2010, the Department received questionnaire responses from HYSCO and the GOK. On February 17, 2011, March 25, 2011,

and April 27, 2011, the Department issued supplemental questionnaires to the GOK and HYSCO. On March 17, 2011, April 22, 2011, and May 25, 2011, the Department received supplemental questionnaire responses from the GOK and HYSCO. On April 14, 2011, the Department published in the **Federal Register** an extension of its preliminary results of the instant administrative review. *See Corrosion-Resistant Carbon Steel Flat Products from the Republic of Korea: Notice of Extension of Preliminary Results of Countervailing Duty Administrative Review*, 76 FR 20954 (April 14, 2011). On July 18, 2011, the Department issued an additional supplemental questionnaire to the GOK. On August 4, 2011 the Department received the supplemental questionnaire response for the GOK.

In accordance with 19 CFR 351.213(b), this review covers only those producers or exporters for which a review was specifically requested. The company that continues to be subject to this review is HYSCO.

Scope of Order

Products covered by this order are certain corrosion-resistant carbon steel flat products from Korea. These products include flat-rolled carbon steel products, of rectangular shape, either clad, plated, or coated with corrosion-resistant metals such as zinc, aluminum, or zinc-, aluminum-, nickel- or iron-based alloys, whether or not corrugated or painted, varnished or coated with plastics or other nonmetallic substances in addition to the metallic coating, in coils (whether or not in successively superimposed layers) and of a width of 0.5 inch or greater, or in straight lengths which, if of a thickness less than 4.75 millimeters, are of a width of 0.5 inch or greater and which measures at least 10 times the thickness or if of a thickness of 4.75 millimeters or more are of a width which exceeds 150 millimeters and measures at least twice the thickness. The merchandise subject to this order is currently classifiable in the Harmonized Tariff Schedule of the United States (HTSUS) at subheadings: 7210.30.0000, 7210.31.0000, 7210.39.0000, 7210.41.0000, 7210.49.0030, 7210.49.0090, 7210.49.0091, 7210.49.0095, 7210.60.0000, 7210.61.0000, 7210.69.0000, 7210.70.6030, 7210.70.6060, 7210.70.6090, 7210.90.1000, 7210.90.6000, 7210.90.9000, 7212.20.0000, 7212.21.0000, 7212.29.0000, 7212.30.1030, 7212.30.1090, 7212.30.3000, 7212.30.5000, 7212.40.1000, 7212.40.5000, 7212.50.0000, 7212.60.0000, 7215.90.1000, 7215.9030, 7215.90.5000, 7217.12.1000, 7217.13.1000, 7217.19.1000, 7217.19.5000, 7217.20.1500, 7217.22.5000, 7217.23.5000, 7217.29.1000, 7217.29.5000, 7217.30.15.0000, 7217.32.5000, 7217.33.5000, 7217.39.1000, 7217.39.5000, 7217.90.1000 and 7217.90.5000. Although the HTSUS subheadings are provided for convenience and customs purposes, the Department's written description of the merchandise is dispositive.

Subsidies Valuation Information

A. Benchmarks for Short-Term Financing

For those programs requiring the application of a won-denominated, short-term interest rate benchmark, in accordance with 19 CFR 351.505(a)(2)(iv), we used as our benchmark the company-specific weighted-average interest rate for commercial won-denominated loans outstanding during the POR. This approach is in accordance with 19 CFR 351.505(a)(3)(i) and the Department's practice. *See, e.g.*, *Corrosion-Resistant Carbon Steel Flat Products from the Republic of Korea: Final Results of Countervailing Duty Administrative Review*, 74 FR 2512 (January 15, 2009) (*Final Results of CORE from Korea 2006*), and accompanying Issues and Decision Memorandum (CORE from Korea 2006 Decision Memorandum) at ''Benchmarks for Short-Term Financing.''

B. Benchmark for Long-Term Loans

During the POR, HYSCO had outstanding countervailable long-term won-denominated loans from government-owned banks and Korean commercial banks. We used the following benchmarks to calculate the subsidies attributable to respondents' countervailable long-term loans obtained through 2009:

(1) For countervailable, won-denominated long-term loans, we used, where available, the company-specific interest rates on the company's comparable commercial, won-denominated loans. If such loans were not available, we used, where available, the company-specific corporate bond rate on the company's public and private bonds, as we have determined that the GOK did not control the Korean domestic bond market after 1991. *See, e.g.*, *Final Negative Countervailing Duty Determination: Stainless Steel Plate in Coils from the Republic of Korea*, 64 FR 15530, 15531 (March 31, 1999) (*Stainless Steel Investigation*) and ''Analysis Memorandum on the Korean Domestic Bond Market'' (March 9, 1999). The use of a corporate bond rate as a long-term benchmark interest rate is consistent with the approach the Department has taken in several prior Korean CVD proceedings. *See Id.*; *see also Final Affirmative Countervailing Duty Determination: Structural Steel Beams from the Republic of Korea* (*H Beams Investigation*), 65 FR 41051 (July 3, 2000), and accompanying Issues and Decision Memorandum at ''Benchmark Interest Rates and Discount Rates;'' and *Final Affirmative Countervailing Duty Determination: Dynamic Random Access Memory Semiconductors from the Republic of Korea* , 68 FR 37122 (June 23, 2003) (*DRAMS Investigation*), and accompanying Issues and Decision Memorandum at ''Discount Rates and Benchmark for Loans.'' Specifically, in those cases, we determined that, absent company-specific, commercial long-term loan interest rates, the won-denominated corporate bond rate is the best indicator of the commercial long-term borrowing rates for won-denominated loans in Korea because it is widely accepted as the market rate in Korea. *See Final Affirmative Countervailing Duty Determinations and Final Negative Critical Circumstances Determinations: Certain Steel Products from Korea,* 58 FR at 37328, 37345–37346 (July 9, 1993) (*Steel Products from Korea*). Where company-specific rates were not available, we used the national average of the yields on three-year, won-denominated corporate bonds, as reported by the Bank of Korea (BOK). This approach is consistent with 19 CFR 351.505(a)(3)(ii) and our practice. *See, e.g.*, CORE from Korea 2006 Decision Memorandum at ''Benchmark for Long Term Loans.''

In accordance with 19 CFR 351.505(a)(2)(i), our benchmarks take into consideration the structure of the government-provided loans. For countervailable fixed-rate loans, pursuant to 19 CFR 351.505(a)(2)(iii), we used benchmark rates issued in the same year that the government loans were issued.

Average Useful Life

Under 19 CFR 351.524(d)(2), we will presume the allocation period for non-recurring subsidies to be the average useful life (AUL) of renewable physical assets for the industry concerned as listed in the Internal Revenue Service's (IRS) 1997 Class Life Asset Depreciation Range System, as updated by the Department of the Treasury. The presumption will apply unless a party claims and establishes that the IRS tables do not reasonably reflect the

company-specific AUL or the country-wide AUL for the industry under examination and that the difference between the company-specific and/or country-wide AUL and the AUL from the IRS tables is significant. According to the IRS tables, the AUL of the steel industry is 15 years. No interested party challenged the 15-year AUL derived from the IRS tables. Thus, in this review, we have allocated, where applicable, all of the non-recurring subsidies provided to the producers/exporters of subject merchandise over a 15-year AUL.

I. Programs Determined To Be Countervailable

A. Short-Term Export Financing

Export-Import Bank of Korea (KEXIM) supplies two types of short-term loans for exporting companies: short-term trade financing and comprehensive export financing. *See* the GOK's December 15, 2010, questionnaire response (QR) at Exhibit J–1. KEXIM provides short-term loans to Korean exporters that manufacture goods under export contracts. *Id.* The loans are provided up to the amount of the bill of exchange or contracted amount, less any amount already received. *Id.* For comprehensive export financing loans, KEXIM supplies short-term loans to any small or medium-sized company, or any large company that is not included in the five largest conglomerates based on their comprehensive export performance. *Id.* To obtain the loans, companies must report their export performance periodically to KEXIM for review. *Id.* Comprehensive export financing loans cover from 50 to 90 percent of the company's export performance. *Id.*

In *Steel Products from Korea*, the Department determined that the GOK's short-term export financing program was countervailable. *See Final Affirmative Countervailing Duty Determinations and Final Negative Critical Circumstances Determinations: Certain Steel Products From Korea*, 58 FR 37338, 37350 (July 9, 1993) (*Steel Products from Korea*); *see also Notice of Final Affirmative Countervailing Duty Determination: Certain Cold-Rolled Carbon Steel Flat Products From the Republic of Korea*, 67 FR 62102, (October 3, 2002) (*Cold-Rolled Investigation*), and accompanying Issues and Decision Memorandum (Cold-Rolled Decision Memorandum) at ''Short-Term Export Financing'' section. No new information or evidence of changed circumstances was presented in this review to warrant any reconsideration of the countervailability of this program. Therefore, we continue to find this program countervailable. Specifically, we determine that the export financing constitutes a financial contribution in the form of a loan within the meaning of section 771(5)(D)(i) of the Act and confers a benefit within the meaning of section 771(5)(E)(ii) of the Act to the extent that the amount of interest the respondents paid for export financing under this program was less than the amount of interest that would have been paid on a comparable short-term commercial loan. *See* discussion in the ''Subsidies Valuation Information'' section with respect to short-term loan benchmark interest rates. In addition, we preliminarily determine that the program is specific, pursuant to section 771(5A)(A) and (B) of the Act, because receipt of the financing is contingent upon exporting. HYSCO reported using short-term export financing during the POR.

Pursuant to 19 CFR 351.505(a)(1), to calculate the benefit under this program, we compared the amount of interest paid under the program to the amount of interest that would have been paid on a comparable commercial loan. As our benchmark, we used the short-term interest rates discussed above in the ''Subsidies Valuation Information'' section. To calculate the net subsidy rate, we divided the benefit by the free on board (f.o.b.) value of the respective company's total exports. On this basis, we determine the net subsidy rate to be 0.09 percent ad valorem for HYSCO.

B. Act on Special Measures for the Promotion of Specialized Enterprises for Parts and Materials

Under the Act on Special Measures for the Promotion of Specialized Enterprises for Parts and Materials (Promotion of Specialized Enterprises Act), the GOK shares the costs of research and development (R&D) projects with companies or research institutions. The goal of the program is to support technology development for core parts and materials necessary for technological innovation and improvement in competitiveness. *See* GOK's December 15, 2010 QR at Exhibit P–1. The program is administered by the Ministry of Knowledge Economy (MKE) and Korea Evaluation Institute of Industrial Technology (KEIT). *Id.*

In accordance with Articles 3 and 4 of the Promotion of Specialized Enterprises Act, MKE prepares a base plan and a yearly execution plan for the development of the parts and materials industry. *See* GOK's December 15, 2010 QR at Exhibit P–1. Under the execution plan, MKE announces to the public a detailed business plan for the development of parts and materials technology. *Id.* at 2. This business plan includes support areas, qualifications, and the application process. *Id.* According to the GOK, any person or company can participate in the program by preparing an R&D business plan that conforms with the requirements set forth in the MKE business plan. *Id.* The completed application must then be submitted to KEIT, which evaluates the application and selects the projects eligible for government support. *Id.* After the selected application is finally approved by MKE, MKE and the participating companies enter into an R&D agreement and then MKE provides the grant. *Id.* at 3.

R&D project costs are shared by the GOK and companies or research institutions as follows: (1) When the group of companies involved in the research is made up of a ratio above two-thirds small to medium-sized companies, the GOK provides a grant up to three-fourths of the project cost; (2) when the group of companies involved in the research is made up of a ratio below two-thirds small to medium-sized companies, the GOK provides a grant up to one-half of the project cost. *See* GOK's December 10, 2010 QR, Exhibit P–1.

Upon completion of the project, if the GOK evaluates the project as ''successful,'' the participating companies must repay 40 percent of the R&D grant to the GOK over five years. *See* GOK's December 10, 2010 QR, Exhibit P–1 at 2. However, if the project is evaluated by the GOK as ''not successful,'' the company does not have to repay any of the grant amount to the GOK. *Id.*

In the final results of administrative review of the CVD order on CORE from Korea covering the period January 1, 2008 through December 31, 2008, the Department determined that the Promotion of Specialized Enterprises Act was *de jure* specific under section 771(5A)(D)(i) of the Act, because it is expressly limited to (1) enterprises specializing in components and materials and (2) enterprises specializing in development of technology for components and materials. *See Corrosion-Resistant Carbon Steel Flat Products from the Republic of Korea: Final Results of Countervailing Duty Administrative Review*, 76 FR 3613 (January 20, 2011) (*Final Results of CORE from Korea 2008*), and accompanying Decision Memorandum (CORE 2008 Decision Memorandum) at ''The Act on Special Measures for the Promotion of Specialized Enterprises for Parts and Materials'' section. The Department

preliminarily determines in this administrative review that the Promotion of Specialized Enterprises Act is specific for the same reasons. We also preliminarily find that a financial contribution was provided within the meaning of section 771(5)(D)(i) of the Act because the GOK's payments constitute a direct transfer of funds. *See Corrosion-Resistant Carbon Steel Flat Products from the Republic of Korea: Preliminary Results and Partial Rescission of Countervailing Duty Administrative Review*, 75 FR 55745; 55750.

HYSCO reported that during the POR, it was involved in one R&D project under this program. *See* HYSCO's December 15, 2010 QR at 18. In a prior review, we found that the R&D grants HYSCO received under this program are for the development of specialized technologies associated with the production of subject merchandise. *See Preliminary Results of CORE from Korea 2008*, 75 FR at 55749, unchanged in *Final Results of CORE from Korea 2008*, 76 FR 3613 and CORE 2008 Decision Memorandum at ''The Act on Special Measures for the Promotion of Specialized Enterprises for Parts and Materials'' section. We have reached the same conclusion in these preliminary results.

In the *Final Results of CORE from Korea 2008,* we treated a portion of the subsidy that does not have to be repaid as a grant and the remaining portion of the subsidy that may have to be repaid as a long-term, interest-free contingent liability loan. *See Final Results of CORE from Korea 2008*, 76 FR 3613 and CORE 2008 Decision Memorandum at ''The Act on Special Measures for the Promotion of Specialized Enterprises for Parts and Materials'' section. This approach is consistent with the Department's regulation and practice. *See* 19 CFR 351.505(d)(1); *see also Certain Hot-Rolled Carbon Steel Flat Products From India: Final Results of Countervailing Duty Administrative Review*, 73 FR 40295 (July 14, 2008) and accompanying Issues and Decision Memorandum at ''Export Promotion Capital Goods Scheme (EPCGS).'' We have adopted the same approach in these preliminary results.

To determine the benefit from the GOK funds HYSCO received under the Specialized Enterprises Act program, we calculated the GOK's contribution for the assistance that was apportioned to HYSCO. *See* 19 CFR 351.504(a). As described immediately above, we treated a portion of this benefit as a grant. In accordance with 19 CFR 351.524(b)(2), we determined whether to allocate the non-recurring benefit from the grants over a 15-year AUL by dividing the GOK-approved grant amount by the company's total sales in the year of approval. Because the approved amount was less than 0.5 percent of the company's total sales, we expensed the grant to the year of receipt, *i.e.*, to 2009, the POR in this review.

With respect to the portion of the subsidy that we are treating as a long-term, interest-free contingent liability loan, pursuant to 19 CFR 351.505(d)(1) for the reasons described above, we find the benefit to be equal to the interest that HYSCO would have paid during the POR had it borrowed the full amount of the contingent liability loan during the POR. Pursuant to 19 CFR 351.505(d)(1), we used a long-term interest rate as our benchmark to calculate the benefit of a contingent liability interest-free loan because the event upon which repayment of the duties depends (*i.e.*, the completion of the R&D project) occurs at a point in time more than one year after the date in which the grant was received. Specifically, we used the long-term benchmark interest rates as described in the ''Subsidies Valuation'' section of these preliminary results.

To calculate the total net subsidy amount for this program, we summed the benefits provided under this program. Next, to calculate the net subsidy rate, we divided the portion of the benefit allocated to the POR by HYSCO's total f.o.b. sales for 2009. *See* 19 CFR 351.525(b)(3). On this basis, we preliminarily determine the net subsidy rate under this program to be 0.02 percent *ad valorem* for HYSCO.

II. Programs Preliminarily Determined Not To Confer a Benefit During the POR

A. Research and Development Grants Under the Industrial Development Act (IDA)

The GOK, through the Ministry of Knowledge Economy (MKE),[1] provides R&D grants to support numerous projects pursuant to the IDA, including technology for core materials, components, engineering systems, and resource technology. *See Corrosion-Resistant Carbon Steel Flat Products From the Republic of Korea: Preliminary Results of Countervailing Duty Administrative Review (Preliminary Results of CORE from Korea 2007*), 74 FR 46100, 46102 (September 8, 2009) unchanged in *Corrosion-Resistant Carbon Steel Flat Products From the Republic of Korea: Final Results of Countervailing Duty Administrative Review* (*Final Results of CORE from Korea 2007*), 74 FR 55192 (October 27, 2009). The IDA is designed to foster the development of efficient technology for industrial development.[2] *See Preliminary Results of CORE from Korea 2007,* 74 FR at 46102. To participate in this program a company may: (1) Perform its own R&D project, (2) participate through the Korea Association of New Iron and Steel Technology (KANIST),[3] which is an association of steel companies established for the development of new iron and steel technology, and/or (3) participate in another company's R&D project and share R&D costs as well as funds received from the GOK. *Id.* To be eligible to participate in this program, the applicant must meet the qualifications set forth in the basic plan and must perform R&D as set forth under the Notice of Industrial Basic Technology Development Plan. *Id.* If the R&D project is not successful, the company must repay the full amount of the grants provided by the GOK. *Id.*

In the *H Beams Investigation,* the Department determined that through KANIST, the Korean steel industry receives funding specific to the steel industry. Therefore, given the nature of KANIST, the Department found projects under KANIST to be specific. *See Preliminary Negative Countervailing Duty Determination with Final Antidumping Duty Determination: Structural Steel Beams From the Republic of Korea,* 64 FR 69731, 69740 (December 14, 1999) (unchanged in the final results, 65 FR 69371 (July 3, 2000), and accompanying Issues and Decision Memorandum at ''R&D Grants Under the Korea New Iron & Steel Technology Research Association (KNISTRA)''). Further, we found that the grants constitute a financial contribution under section 771(5)(D)(i) of the Act in the form of a grant, and bestow a benefit under section 771(5)(E) of the Act in the amount of the grant. *Id.* No new factual information or evidence of changed circumstances has been provided to the Department with respect to this program. Therefore, we preliminarily continue to find that this program is *de jure* specific within the meaning of section 771(5A)(D)(i) of the Act and this program constitutes a financial contribution and confers a benefit under sections 771(5)(D)(i) and 771(5)(E) of the Act, respectively.

[1] Prior to February 29, 2008, MKE was known as the Ministry of Commerce, Industry, and Energy (MOCIE).

[2] The exact nature of the IDA projects are proprietary and therefore cannot be revealed in this public notice. Details on these projects may be found at HYSCO's December 15, 2010 QR at Exhibit G–2.

[3] Also known as Korea New Iron & Steel Technology Research Association (KNISTRA).

HYSCO benefitted from this program during the POR. *See* HYSCO's December 15, 2010, QR at 13. HYSCO participated in a project indirectly through KANIST. *Id.* However, according to HYSCO, the project for which grants were received from the government was not related to subject merchandise. *Id.* at 14. The nature of the project for which HYSCO received the grant is business proprietary and cannot be discussed in this public notice. For information on this project, *see* Memorandum to the File titled ''HYSCO's R&D Grants under the IDA/ITIPA'' (August 31, 2011) (HYSCO IDA/ITIPA Grant Memorandum), of which a public version is on file in the Central Records Unit (CRU).

The Department has previously determined that grants HYSCO received for this particular project under this program are attributable to the production of non-subject merchandise. *See Corrosion-Resistant Carbon Steel Flat Products From the Republic of Korea: Preliminary Results of Countervailing Duty Administrative Review* (*Preliminary Results of CORE from Korea 2007*), 74 FR 46100; 46102 (September 8, 2010) unchanged in *Corrosion-Resistant Carbon Steel Flat Products From the Republic of Korea: Final Results of Countervailing Duty Administrative Review* (*Final Results of CORE from Korea 2007*), 74 FR 55192 (October 27, 2008); and Memorandum to the File titled ''HYSCO's R&D Grants Under the IDA Memorandum to the file in the Countervailing Duty Administrative Review for the period of review (POR) January 1, 2007 through December 31, 2007'' (August 31, 2009) (HYSCO IDA Grants Memorandum), of which a public version is on file in the CRU. *See also* HYSCO's December 10, 2010, QR at Exhibit G–5. Therefore, consistent with 19 CFR 351.525(b)(5) and our past practice, we preliminarily determine that these grants for the project in question are tied to non-subject merchandise and, thus, did not confer a benefit to HYSCO's production or sales of subject merchandise during the POR.

B. Research and Development Grants Under the Industrial Technology Innovation Promotion Act (ITIPA)

The GOK's Industrial Technology Innovation Promotion Act program is designed to foster future new industries and enhance the competitiveness of primary industries through fundamental technology development. *See* GOK's December 15, 2010, QR at Exhibit G–3. The program is administered by MKE and the Korean Evaluation Institute of Industrial Technology (KEIT). *Id.*

Under the Industrial Technology Innovation Promotion Act, GOK provides R&D grants to support the areas of transportation system, industrial materials, robots, biomedical equipment, clean manufacturing foundation, knowledge services and industry convergence technology. *See* GOK's December 15, 2010, QR at Exhibit G–3 at 1–2.

Pursuant to Article 11 of the Industrial Technology Innovation Promotion Act, KEIT prepares a basic plan for the development of technology, on behalf of MKE. *Id.* at 3. This plan includes the R&D projects that are eligible, describes the application process, and designates the supporting documentation required. *Id.* The plan is announced to the public. *Id.* According to the GOK, any person who wishes to participate in the program prepares an R&D business plan that meets the requirements set forth in the basic plan and then submits the application to the GOK's Application Review Committee, which then evaluates the application to determine if it conforms to the terms and conditions set forth in the basic plan. *Id.* If the application is approved, MKE and the company enter into an R&D agreement and then MKE provides the grant. *Id.*

The costs of the R&D projects under this program are shared by the company (or research institution) and the GOK. *See* GOK's December 15, 2010, QR at Exhibit G–3 at 2. Specifically, the grant ratio for project costs are as follows: (1) For projects with one small/medium-sized enterprise (SME), the GOK provides grants up to three-fourths of the project costs, (2) for projects with one conglomerate, the GOK provides grants up to one-half of the project costs, (3) for projects with more than two participants of which SMEs comprise more than two-thirds of the participant ratio, the GOK provides up to three-fourths of the project costs, and (4) for projects with more than two participants of which SMEs comprise less than two-thirds of the participant ratio, the GOK provides up to one-half of the project costs. *Id.*

When the project is evaluated as ''successful'' upon completion, the participating companies must repay 40 percent of the R&D grant to the GOK over five years. *Id.* at 2. However, when the project is evaluated as ''not successful,'' the company does not have to repay the GOK any of the grant amount. *Id.*

During the POR, HYSCO received grants under the Industrial Technology Innovation Promotion Act for two R&D projects in which the company participated with other firms. *See* GOK's December 15, 2010, QR at 10 and G–3; *see also* HYSCO's December 15, 2010, QR at 13, G–3, and G–4. Based upon our review of program documents submitted in the response, we preliminarily determine that one grant received is related to the first step of the project discussed above in the section ''Research and Development Grants Under the Industrial Development Act (IDA).'' *See* HYSCO's December 15, 2010, QR at 14. Therefore, we preliminarily determine that this grant is attributable to the production of non-subject merchandise. *See* the HYSCO IDA/ITIPA Grant Memorandum.

The second step of this project is being performed under the auspices of the ITIPA. *Id.* at 13 and G–3. Upon review of the information submitted by HYSCO, we preliminarily determined that this grant pertains specifically to production of a product that is not subject merchandise. *See* Memorandum to the File titled ''HYSCO's R&D Grants Under the IDA/ITIPA.'' (August 31, 2011), of which a public version is on file in the CRU. Therefore, consistent with 19 CFR 351.525(b)(5) and our past practice, we preliminarily determine that this grant is tied to non-subject merchandise. Hence we did not include this grant in our benefit calculations.

In addition, HYSCO reports receiving another grant during the POR for a project that is being performed under the ITIPA. *See* HYSCO's December 15, 2010, QR at 14. Dividing this grant amount by HYSCO's total sales results in a net subsidy rate that is less than 0.005 percent *ad valorem.* Thus, consistent with the Department's practice, we find that the benefit received in connection with this grant is not measurable. *See, e.g.,* CORE from Korea 2006 Decision Memorandum at ''GOK's Direction of Credit'' section. Consequently, we preliminarily determine that it is not necessary for the Department to make a finding as to the countervailability of this program in this review. If a future administrative review of this proceeding is requested, we will further examine grants provided under ITIPA.

C. R&D Grants Under the Act on the Promotion of the Development, Use, and Diffusion of New and Renewable Energy

The GOK's Development of Use, and Diffusion of New and Renewable Energy program (formerly the Development of Alternative Energy program) is reportedly designed to contribute to the preservation of the environment, the sound and sustainable development of the national economy, and the promotion of national welfare by diversifying energy resources through

promoting technological development, the use and diffusion of alternative energy, and reducing the discharge of gases harmful to humans or the environment by activating the new and renewable energy industry. *See* GOK's December 15, 2010, QR at Exhibit O–1. The program is administered by the Ministry of Knowledge Economy (MKE), Korea Energy Management Corporation (KEMCO), and the Korea Institute of Energy Technology Evaluation and Planning (KETEP). *Id.*

Under the Act on the Promotion of the Development, Use, and Diffusion of New and Renewable Energy (New and Renewable Energy Act), the GOK provides R&D grants to support the following businesses: (1) Electric and Nuclear Power Development, (2) Energy and Resources Technology Development, and (3) New and Renewable Energy Technology Development. *Id.,* at 2.

Pursuant to Articles 5 and 6 of the New and Renewable Energy Act, MKE prepares a base plan and a yearly execution plan for the development of new and renewable energy. *Id.* at 3. The base and execution plans are announced to the public. *Id.* According to the GOK, any person who wishes to participate in the program prepares an R&D business plan and then submits the application to the KETEP, which then evaluates the application and selects the projects eligible for government support. *Id.* After the selected application is finally approved by MKE, KEMCO, and the general supervising institute of the consortium enter into an R&D agreement and then MKE provides the grant through KEMCO. *Id.*

The costs of the R&D projects under this program are shared by the company (or research institution) and the GOK. *Id.* at 2. Specifically, the grant ratio for project costs are as follows: (1) For large companies, the GOK provides grants up to one-half of the project costs, (2) for small/medium-sized companies, the GOK provides grants up to three-fourths of the project costs, (3) for a consortium,[4] the GOK provides grants up to three-fourths of the project costs, and (4) for others, the GOK provides grants up to one-half of the project costs. *Id.*

When the project is evaluated as ''successful'' upon completion, the participating companies must repay 40 percent of the R&D grant to the GOK. *Id.* at 2. However, when the project is evaluated as ''not successful'', the company does not have to repay any of the grant amount to the GOK. *Id.*

During the POR, HYSCO received an energy-related grant under the New and Renewable Energy Act for a project in which the company participated with other firms. *See* GOK's December 15, 2010, QR at 14–15 and Exhibit O–1. HYSCO reported that the R&D grant under the New and Renewable Energy Act are provided with respect to specific projects, which are generally multi-year projects where the amount of funds to be provided by the GOK is set out in the project contract. *See* HYSCO's December 15, 2010, QR at Exhibit O–3. The cost of R&D projects under this program is shared by the participating companies and the GOK. *Id.* HYSCO claims that the project for which the grant was received from the government was not related to subject merchandise. *Id.* at 18.

Upon review of the information submitted by HYSCO, we preliminarily determine that the grant pertains specifically to production of a product that is not subject merchandise. *See* Memorandum to the File titled ''HYSCO's R&D Grants under the Act on the Promotion of the Development, Use, and Diffusion of New and Renewable Energy'' (August 31, 2011) (*HYSCO New and Renewable Energy Grant Memorandum*), of which a public version is on file in the CRU. Therefore, consistent with 19 CFR 351.525(b)(5), we preliminarily determine that this grant is tied to non-subject merchandise. Hence, we preliminarily determine that the New and Renewable Energy Act did not confer a benefit during the POR.

D. Reduction in Taxes for Operation in Regional and National Industrial Complexes

Under Article 46 of the Industrial Cluster Development and Factory Establishment Act (Industrial Cluster Act), a state or local government may provide tax exemptions as prescribed by the Restriction of Special Taxation Act. In accordance with this authority, Article 276 of the Local Tax Act provides that an entity that acquires real estate in a designated industrial complex for the purpose of constructing new buildings or enlarging existing facilities is exempt from the acquisition and registration tax. In addition, the entity is exempt from 50 percent of the property tax on the real estate (*i.e.,* the land, buildings, or facilities constructed or expanded) for five years from the date the tax liability becomes effective. The exemption is increased to 100 percent of the relevant land, buildings, or facilities that are located in an industrial complex outside of the Seoul metropolitan area. The GOK established the tax exemption program under Article 276 in December 1994, to provide incentives for companies to relocate from populated areas in the Seoul metropolitan region to industrial sites in less populated parts of the country. The program is administered by the local tax officials of the county where the industrial complex is located.

During the POR, pursuant to Article 276 of the Local Tax Act, HYSCO received exemptions from the acquisition tax, registration tax, and property tax based on the location of its manufacturing facilities, Suncheon Works, in the Yulchon Industrial Complex, a government-sponsored industrial complex designated under the Industrial Cluster Act. In addition, HYSCO received an exemption from the local education tax during the POR. The local education tax is levied at 20 percent of the property tax. The property tax exemption, therefore, results in an exemption of the local education tax.

In the *CFS Paper Investigation,* the Department determined that the tax exemptions under Article 276 of the Local Tax Act are countervailable subsidies. *See Coated Free Sheet Paper from the Republic of Korea: Notice of Final Affirmative Countervailing Duty Determination,* 72 FR 60639 (October 25, 2007) (*CFS Paper Investigation*), and accompanying Issues and Decision Memorandum at ''Reduction in Taxes for Operation in Regional and National Industrial Complexes'' (CFS Paper Decision Memorandum).

Dividing the total tax exemptions received under this program during the POR by HYSCO's total sales for the POR results in a net subsidy rate of less than 0.005 percent *ad valorem.* Consistent with the Department's practice, we find that the benefits received under this program are not measurable and, therefore, we have not included any benefits under this program in the net subsidy rate. *See, e.g.,* CORE from Korea 2006 Decision Memorandum at ''GOK's Direction of Credit'' section. We will continue to examine this program in future reviews.

E. Overseas Resource Development Program: Loan From Korea Resources Corporation (KORES)

In *Final Results of CORE from Korea 2006,* the Department found that the GOK enacted the Overseas Resource Development (ORD) Business Act in order to establish the foundation for securing the long-term supply of essential energy and major material minerals, which are mostly imported because of scarce domestic resources.

[4] If the ratio of small to medium-sized companies in a consortium is above two-thirds, the GOK provides grants up to one-half of the project costs. *See* GOK's December 10, 2010, QR, Exhibit P–1.

See Preliminary Results of CORE from Korea 2006, 73 FR 52315; 52326 (September 9, 2008) unchanged in *Final Results of CORE from Korea 2006,* 74 FR 2512 (January 15, 2009), and accompanying Issues and Decision Memorandum at ''Programs Determined To Be Not Used'' section. Pursuant to Article 11 of this Act, MKE annually announces its budget and the eligibility criteria to obtain a loan from MKE. *See* GOK's May 25, 2011, QR at Exhibit A–9. Any company that meets the eligibility criteria may apply for a loan to MKE. *Id.* The loan evaluation committee evaluates the applications, selects the recipients and gets approval from the minister of MKE. *Id.* For projects related to the development of strategic mineral resources, the Korean Resources Corporation (KORES) lends the funds to the company for foreign resources development. *Id.*

During the POR, HYSCO obtained loans from KORES for investment in a copper mine in Mexico. *See* HYSCO's December 22, 2009, QR at 11, Exhibit 8 at 24, HYSCO's April 22, 2011 QR at Exhibit A–8 and HYSCO's May 25, 2011, QR at Exhibit A–14. Based upon examination of the loan documents, we preliminarily determine that the KORES loans are tied to copper, which is non-subject merchandise. Further, we find that copper is not an input primarily dedicated to the production of subject merchandise. On this basis, we find the KORE loans are attributable to non-subject merchandise. *See* 19 CFR 351.525(b)(5). Therefore, we preliminarily determine that HYSCO did not receive a benefit from this program with respect to the subject merchandise during the POR.

F. Overseas Resource Development Program: Loan From Korea National Oil Corporation (KNOC)

In *Final Results of CORE from Korea 2007,* the Department found that the GOK enacted the Overseas Resource Development (ORD) Business Act in order to establish the foundation for securing the long-term supply of essential energy and major material minerals, which are mostly imported because of scarce domestic resources. *See Preliminary Results of CORE from Korea 2007,* 74 FR 46100; 46107–46108 (September 8, 2010) unchanged in *Final Results of CORE from Korea 2007*) 74 FR 55192 (October 27, 2008). Pursuant to Article 11 of this Act, the MKE annually announces its budget and the eligibility criteria to obtain a loan from MKE. *See* GOK's April 22, 2011, QR at Exhibit A–1. Any company that meets the eligibility criteria may apply for a loan to MKE. *Id.* For projects that are related to petroleum and natural gas, the Korea National Oil Corporation (KNOC) lends the funds to the company for foreign resources development. *Id.* An approved company enters into a borrowing agreement with KNOC for the development of the selected resource. *Id.* Two types of loans are provided under this program: ''General loans'' and ''success-contingent loans.'' For a success-contingent loan, the repayment obligation is subject to the results of the development project. In the event that the project fails, the company will be exempted for all or a portion of the loan repayment obligation. However, if the project succeeds, a portion of the project income is payable to KNOC. *Id.*

During the POR, HYSCO obtained loans from KNOC related to petroleum exploration projects. *See* HYSCO's December 22, 2009, questionnaire response (QR) at 11 and Exhibit 8 at 24, HYSCO's March 17, 2011, QR at 11 and Exhibit A–2 and HYSCO's April 22, 2011, QR at Exhibits A–9 and A–12. Based upon examination of the loan documents, we preliminarily determine that the KNOC loans are tied to petroleum exploration, which does not involve subject merchandise. On this basis, we find the KNOC loans are attributable to non-subject merchandise. *See* 19 CFR 351.525(b)(5). Therefore, we preliminarily determine that HYSCO did not receive a benefit from this program with respect to the subject merchandise during the POR. We will continue to examine this program in future reviews.

III. Programs for Which Additional Information Is Required

Restriction of Special Taxation Act (RSTA) Article 26

HYSCO indicated that it used Article 26 under the Restriction of Special Taxation Act (RSTA Article 26) during the 2009 POR. The Department issued supplemental questionnaires to the GOK to gather additional information needed for our analysis of the specificity of this program. The GOK submitted its latest questionnaire response regarding the RSTA Article 26 program shortly before the due date of the preliminary results. *See* the GOK's August 17, 2011, questionnaire response. As a result, we were unable to incorporate the information in the GOK's response into our preliminary findings. Therefore, we will address this program in a post-preliminary decision memorandum.

IV. Programs Preliminarily Determined To Be Not Used

We preliminarily determine that the following programs were not used by HYSCO during the POR:

- Reserve for Research and Manpower Development Fund Under RSTA Article 9 (TERCL Article 8).
- RSTA Article 11: Tax Credit for Investment in Equipment to Development Technology and Manpower (TERCL Article 10).
- Reserve for Export Loss Under TERCL Article 16.
- Reserve for Overseas Market Development Under TERCL Article 17.
- Reserve for Export Loss Under TERCL Article 22.
- Exemption of Corporation Tax on Dividend Income from Overseas Resources Development Investment Under TERCL Article 24.
- Reserve for Investment (Special Cases of Tax for Balanced Development Among Areas Under TERCL Articles 42–45).
- Tax Credits for Specific Investments Under TERCL Article 71.
- Asset Revaluation Under Article 56(2) of the Tax Reduction and Exemption Control Act (TERCL).
- RSTA Article 94: Equipment Investment to Promote Workers Welfare (TERCL Article 88).
- Electricity Discounts Under the Requested Loan Adjustment Program.
- Electricity Discounts Under the Emergency Load Reductions Program.
- Export Industry Facility Loans and Specialty Facility Loans.
- Exemption of VAT on Imports of Anthracite Coal.
- Short-Term Trade Financing Under the Aggregate Credit Ceiling Loan Program Administered by the Bank of Korea.
- Industrial Base Fund.
- Excessive Duty Drawback.
- Private Capital Inducement Act.
- Scrap Reserve Fund.
- Short-Term Document Acceptance (D/A) Financing Provided Under KEXIM's Trade Rediscount Program.
- Special Depreciation of Assets on Foreign Exchange Earnings.
- Export Insurance Rates Provided by the Korean Export Insurance Corporation.
- Loans from the National Agricultural Cooperation Federation.
- Tax Incentives from Highly Advanced Technology Businesses Under the Foreign Investment and Foreign Capital Inducement Act.
- Other Subsidies Related to Operations at Asan Bay: Provision of Land and Exemption of Port Fees Under the Harbor Act.

• D/A Loans Issued by the Korean Development Bank and Other Government-Owned Banks.

• R&D Grants under the Promotion of Industrial Technology Innovation Act.

• Export Loans by Commercial Banks Under KEXIM's Trade Bill Rediscounting Program.

Preliminary Results of Review

In accordance with 19 CFR 351.221(b)(4)(i), we calculated an individual subsidy rate for each producer/exporter subject to this administrative review. For the period January 1, 2009, through December 31, 2009, we preliminarily determine the net subsidy rate for HYSCO to be 0.11 percent *ad valorem,* a *de minimis* rate. *See* 19 CFR 351.106(c)(1).

The Department intends to issue assessment instructions to U.S. Customs and Border Protection (CBP) 15 days after the date of publication of the final results of this review. If the final results remain the same as these preliminary results, the Department will instruct CBP to liquidate without regard to countervailing duties all shipments of subject merchandise produced by HYSCO, entered, or withdrawn from warehouse, for consumption from January 1, 2009, through December 31, 2009. The Department will also instruct CBP to collect cash deposits of zero percent on shipments of the subject merchandise produced by HYSCO, entered, or withdrawn from warehouse, for consumption on or after the date of publication of the final results of this review.

We will instruct CBP to continue to collect cash deposits for non-reviewed companies at the most recent company-specific or country-wide rate applicable to the company. Accordingly, the cash deposit rates that will be applied to companies covered by this order, but not examined in this review, are those established in the most recently completed administrative proceeding for each company. These rates shall apply to all non-reviewed companies until a review of a company assigned these rates is requested.

Disclosure and Public Comment

Pursuant to 19 CFR 351.224(b), the Department will disclose to parties to the proceeding any calculations performed in connection with these preliminary results within five days after the date of the public announcement of this notice. Pursuant to 19 CFR 351.309, interested parties may submit written comments in response to these preliminary results. Unless otherwise indicated by the Department, case briefs must be submitted within 30 days after the publication of these preliminary results. *See* 19 CFR 351.309(c)(1)(ii). Rebuttal briefs, which are limited to arguments raised in case briefs, must be submitted no later than five days after the time limit for filing case briefs, unless otherwise specified by the Department. *See* 19 CFR 351.309(d)(1). Parties who submit argument in this proceeding are requested to submit with the argument: (1) A statement of the issue; and (2) a brief summary of the argument. Parties submitting case and/or rebuttal briefs are requested to provide the Department copies of the public version on disk. Case and rebuttal briefs must be served on interested parties in accordance with 19 CFR 351.303(f). Also, pursuant to 19 CFR 351.310(c), within 30 days of the date of publication of this notice, interested parties may request a public hearing on arguments to be raised in the case and rebuttal briefs. Unless the secretary specifies otherwise, the hearing, if requested, will be held two days after the date for submission of rebuttal briefs.

Pursuant to 19 CFR 351.305(b)(4), representatives of parties to the proceeding may request disclosure of proprietary information under administrative protective order no later than 10 days after the representative's client or employer becomes a party to the proceeding, but in no event later than the date the case briefs, under 19 CFR 351.309(c)(i), are due. The Department will publish the final results of this administrative review, including the results of its analysis of issues raised in any case or rebuttal brief or at a hearing.

These preliminary results of review are issued and published in accordance with sections 751(a)(1) and 777(i)(1) of the Act and 19 CFR 351.221(b)(4).

Dated: August 24, 2011.

Ronald K. Lorentzen,

Deputy Assistant Secretary for Import Administration.

[FR Doc. 2011–22325 Filed 8–30–11; 8:45 am]

BILLING CODE 3510–DS–P

DEPARTMENT OF COMMERCE

National Oceanic and Atmospheric Administration

RIN 0648–XA671

Pacific Fishery Management Council (Council); Work Session To Review Proposed Salmon Methodology Changes

AGENCY: National Marine Fisheries Service (NMFS), National Oceanic and Atmospheric Administration (NOAA), Commerce.

ACTION: Notice of a public meeting.

SUMMARY: The Pacific Fishery Management Council's Salmon Technical Team (STT), Scientific and Statistical Committee (SSC) Salmon Subcommittee, and Model Evaluation Workgroup (MEW) will review proposed salmon methodology and conservation objective changes in a joint work session, which is open to the public.

DATES: The work session will be held Tuesday, October 4, 2011, from 9 a.m. to 4:30 p.m., and Wednesday, October 5, 2011 from 9 a.m. to 4 p.m.

ADDRESSES: The work session will be held at the Pacific Council Office, Large Conference Room, 7700 NE Ambassador Place, Suite 101, Portland, OR 97220–1384.

FOR FURTHER INFORMATION CONTACT: Mr. Chuck Tracy, Salmon Management Staff Officer, Pacific Fishery Management Council; telephone: (503) 820–2280.

SUPPLEMENTARY INFORMATION: The purpose of the work session is to brief the STT and SSC Salmon Subcommittee on proposed changes to methods and standards used to manage ocean salmon fisheries. The work session will potentially include review of an abundance-based management framework for Lower Columbia River tule fall Chinook, review of a harvest model for Sacramento River Winter-Run Chinook, a review and evaluation of preseason and postseason mark-selective fisheries both north and south of Cape Falcon, and an analysis of bias in Chinook and Coho Fishery Regulation Assessment Models due to multiple encounters in mark-selective fisheries.

Although non-emergency issues not contained in the meeting agenda may come before the STT, SSC Salmon Subcommittee, and MEW for discussion, those issues may not be the subject of formal action during this meeting. Action will be restricted to those issues specifically listed in this notice and any issues arising after publication of this notice that require emergency action under Section 305(c) of the Magnuson-Stevens Fishery Conservation and Management Act, provided the public has been notified of the intent to take final action to address the emergency.

Special Accommodations

This meeting is physically accessible to people with disabilities. Requests for sign language interpretation or other auxiliary aids should be directed to Mr.

Kris Kleinschmidt at (503) 820–2280 at least 5 days prior to the meeting date.

Dated: August 25, 2011.

Tracey L. Thompson,

Acting Director, Office of Sustainable Fisheries, National Marine Fisheries Service.

[FR Doc. 2011–22194 Filed 8–30–11; 8:45 am]

BILLING CODE 3510–22–P

DEPARTMENT OF COMMERCE

National Oceanic and Atmospheric Administration

RIN 0648–XA663

Pacific Fishery Management Council; Public Meeting

AGENCY: National Marine Fisheries Service (NMFS), National Oceanic and Atmospheric Administration (NOAA), Commerce.

ACTION: Notice of public meeting.

SUMMARY: The Pacific Fishery Management Council (Pacific Council) will convene a meeting of the Stock Assessment Review (STAR) Panel, to consider and review the 2011 Pacific sardine stock assessment.

DATES: The meeting will take place from Tuesday, October 4 through Friday, October 7, 2011. The meeting will begin at 10 a.m. on October 4, and will begin at 8 a.m. each subsequent day. The meeting will continue until 5 p.m. each day or until business for the day has been completed. The meeting may adjourn early on Friday, October 7, if sufficient progress has been achieved.

ADDRESSES: The meeting will be held in the Green Room of the National Marine Fisheries Service's Southwest Fisheries Science Center; 8604 La Jolla Shores Drive, La Jolla, CA 92037.

Council address: Pacific Fishery Management Council, 7700 NE Ambassador Place, Suite 101, Portland, OR 97220–1384.

FOR FURTHER INFORMATION CONTACT: Mr. Kerry Griffin, Staff Officer, Pacific Council: (503) 820–2280.

SUPPLEMENTARY INFORMATION: The purpose of the meeting is to review the 2011 stock assessment for Pacific sardine, which will be used to develop management measures for the 2012 sardine fishery off the U.S. west coast.

Although non-emergency issues not contained in the meeting agenda may come before this group for discussion, those issues may not be the subject of formal action during this meeting. Action will be restricted to those issues specifically listed in this notice and any issues arising after publication of this notice that require emergency action under section 305(c) of the Magnuson-Stevens Fishery Conservation and Management Act, provided the public has been notified of the Council's intent to take final action to address the emergency.

Special Accommodations

This meeting is physically accessible to people with disabilities. Requests for sign language interpretation or other auxiliary aids should be directed to Mr. Kris Kleinschmidt at (503) 820–2280 at least 5 days prior to the meeting date.

Dated: August 25, 2011.

Tracey L. Thompson,

Acting Director, Office of Sustainable Fisheries, National Marine Fisheries Service.

[FR Doc. 2011–22193 Filed 8–30–11; 8:45 am]

BILLING CODE 3510–22–P

DEPARTMENT OF COMMERCE

National Oceanic and Atmospheric Administration

Membership of the National Oceanic and Atmospheric Administration Performance Review Board

AGENCY: National Oceanic and Atmospheric Administration (NOAA), Department of Commerce.

ACTION: Notice of membership of the NOAA Performance Review Board.

SUMMARY: In accordance with 5 U.S.C. 4314(c)(4), NOAA announces the appointment of members who will serve on the NOAA Performance Review Board (PRB). The NOAA PRB is responsible for reviewing performance appraisals and ratings of Senior Executive Service Professional members and making written recommendations to the appointing authority on retention and compensation matters, including performance-based pay adjustments, awarding of bonuses, and reviewing recommendations for potential Presidential Rank Award nominees. The appointment of members to the NOAA PRB will be for a period of 12 months.

DATES: *Effective Date:* The effective date of service of the four new appointees to the NOAA Performance Review Board is September 30, 2011.

FOR FURTHER INFORMATION CONTACT: Omar Williams, Executive Resources Program Manager, Workforce Management Office, NOAA, 1305 East-West Highway, Silver Spring, Maryland 20910, (301) 713–6301.

SUPPLEMENTARY INFORMATION: The names and positions of the members of the NOAA PRB are set forth below:

Louisa Koch	Director, Office of Education.
Maureen E. Wylie	Chief Financial Officer, Office of the Chief Financial Officer.
Charles S. Baker	Deputy Assistant Administrator, NESDIS National Environmental Satellite, Data and Information Service.
Russell F. Smith III	Deputy Assistant Secretary for International Fisheries Office of the Under Secretary for Oceans and Atmosphere.
Christopher C. Cartwright	Chief Financial Officer National Ocean Service.
David Robinson	Associate Director for Management Resources, National Institute of Standards and Technology, DOC.
Laura K. Furgione	Deputy Assistant Administrator for Weather Services, National Weather Services, National Weather Service.
John S. Gray II	Director, Legislative Affairs Office of Legislative and Intergovernmental Affairs.
Craig McLean	Acting Assistant Administrator For Oceanic and Atmospheric Research.
Dr. Ned Cyr	Director, Office of Science and Technology National Marine Fisheries Service.

Dated: August 16, 2011.

Jane Lubchenco,

Under Secretary of Commerce for Oceans and Atmosphere.

[FR Doc. 2011–22231 Filed 8–30–11; 8:45 am]

BILLING CODE 3510–12–P

CONSUMER PRODUCT SAFETY COMMISSION

[CPSC Docket No. CPSC–2011–0050]

Third Party Testing for Certain Children's Products; Toys: Requirements for Accreditation of Third Party Conformity Assessment Bodies

AGENCY: Consumer Product Safety Commission.

ACTION: Notice of Requirements.

SUMMARY: The Consumer Product Safety Commission (''CPSC,'' ''Commission,'' or ''we'') is issuing a notice of requirements that provides the criteria and process for Commission acceptance of accreditation of third party conformity assessment bodies for testing, pursuant to ASTM International's (formerly the American Society for Testing and Materials) (''ASTM'') *Standard Consumer Safety Specification for Toy Safety,* F 963–08 (''ASTM F 963–08''), and section 4.27 (toy chests) from ASTM International's F 963–07e1 version of the standard (''ASTM F 963–07e1''), which are the consumer product safety standards for toys, pursuant to section 106 of the Consumer Product Safety Improvement Act of 2008 (CPSIA), Public Law 110–314. The Commission is issuing this notice of requirements pursuant to section 14(a)(3)(B)(vi) of the Consumer Product Safety Act (CPSA) (15 U.S.C. 2063(a)(3)(B)(vi)).

DATES: *Effective Date:* The requirements for accreditation of third party conformity assessment bodies to assess conformity with ASTM F 963–08 and/or section 4.27 of ASTM F 963–07e1 are effective upon publication of this notice in the **Federal Register**.[1]

Comments in response to this notice of requirements should be submitted by September 30, 2011. Comments on this notice should be captioned ''Third party Testing for Certain Children's Products; Toys: Requirements for Accreditation of Third party Conformity Assessment Bodies.''

[1] The Commission voted 5–0 to publish this notice of requirements. Chairman Inez M. Tenenbaum and Commissioner Nancy A. Nord each issued a statement, and the statements can be found at *http://www.cpsc.gov/pr/statements.html.*

ADDRESSES: You may submit comments, identified by Docket No. CPSC–2011–0050, by any of the following methods:

Electronic Submissions: Submit electronic comments in the following way:

Federal eRulemaking Portal: http://www.regulations.gov. Follow the instructions for submitting comments. To ensure timely processing of comments, the Commission is no longer accepting comments submitted by electronic mail (e-mail) except through *http://www.regulations.gov.*

Written Submissions: Submit written submissions in the following ways: Mail/Hand delivery/Courier (for paper, disk, or CD–ROM submissions) preferably in five copies, to: Office of the Secretary, Consumer Product Safety Commission, Room 820, 4330 East West Highway, Bethesda, MD 20814; telephone (301) 504–7923.

Instructions: All submissions received must include the agency name and docket number for this notice. All comments received may be posted without change to *http://www.regulations.gov,* including any personal information provided. Do not submit confidential business information, trade secret information, or other sensitive or protected information (such as a Social Security Number) electronically; if furnished at all, such information should be submitted in writing.

Docket: For access to the docket to read background documents or comments received, go to *http://www.regulations.gov.*

FOR FURTHER INFORMATION CONTACT: Richard McCallion, Team Leader for the Mechanical, Recreation, and Sports Program Area, U.S. Consumer Product Safety Commission, 4330 East West Highway, Bethesda, Maryland 20814; e-mail *RMcCallion@cpsc.gov.* CPSC intends to issue a **Federal Register** notice providing information about its proposed education and outreach plan for stakeholders directly affected by the Notice of Requirements for Third Party Testing for Certain Children's Products. The **Federal Register** notice will also request public comment and input. Many of the informative materials for stakeholders will be available at a dedicated toy safety standard webpage: *http://www.cpsc.gov/toysafety.*

SUPPLEMENTARY INFORMATION:

I. Introduction

Section 14(a)(3)(B)(vi) of the CPSA, as added by section 102(a)(2) of the CPSIA, directs the CPSC to publish a notice of requirements for accreditation of third party conformity assessment bodies to assess children's products for conformity with ''other children's product safety rules.'' Section 14(f)(1) of the CPSA defines ''children's product safety rule'' as ''a consumer product safety rule under [the CPSA] or similar rule, regulation, standard, or ban under any other Act enforced by the Commission, including a rule declaring a consumer product to be a banned hazardous product or substance.'' Under section 14(a)(3)(A) of the CPSA, each manufacturer (including the importer) or private labeler of products subject to those regulations must have products that are manufactured more than 90 days after the **Federal Register** publication date of a notice of the requirements for accreditation, tested by a third party conformity assessment body accredited to do so, and must issue a certificate of compliance with the applicable regulations based on that testing. Section 14(a)(2) of the CPSA, as added by section 102(a)(2) of the CPSIA, requires that certification be based on testing of sufficient samples of the product, or samples that are identical in all material respects to the product. The Commission also emphasizes that, irrespective of certification, the product in question must comply with applicable CPSC requirements (*see, e.g.,* section 14(h) of the CPSA, as added by section 102(b) of the CPSIA).

This notice provides the criteria and process for Commission acceptance of accreditation of third party conformity assessment bodies for testing toys, pursuant to ASTM F 963–08, and for testing toy chests, pursuant to section 4.27 of ASTM F 963–07e1. ASTM F 963–08 and section 4.27 of ASTM F 963–07e1 are voluntary standards, but under section 106(a) of the CPSIA, they have become mandatory federal requirements, ''except for section 4.2 and Annex 4 [of ASTM F 963], or any provision that restates or incorporates an existing mandatory standard or ban promulgated by the Commission or by statute.'' Readers may obtain a copy of ASTM F 963–08 and/or ASTM F 963–07e1 from ASTM International, 100 Barr Harbor Drive, P.O. Box C700, West Conshohocken, PA, 19428–2959; (610)–832–9500; *http://www.astm.org.*

Section 106(a) of the CPSIA states that, beginning 180 days after August 14, 2008—the date the CPSIA was enacted—ASTM F 963–07 shall be considered a consumer product safety standard issued by the Commission under section 9 of the CPSA. Under section 106(g) of the CPSIA, when ASTM proposes to revise ASTM F 963, it must notify the Commission of the proposed revision. The revised standard will be considered the consumer

product safety standard effective 180 days after the date on which ASTM notified the Commission of the revision, unless the Commission objects within the first 90 days of the 180-day period. If the Commission determines that the proposed revision does not improve the safety of a consumer product, the Commission can notify ASTM that the already-existing standard will continue to be considered the consumer product safety standard.

ASTM proposed F 963–08 as a revised standard in February 2009, and on May 13, 2009, the Commission voted to accept F 963–08 as the consumer product safety standard for toys, except the revision omitting section 4.27 related to toy chests, which the Commission retained from the previous version of F 963 (ASTM F 963–07e1). Accordingly, ASTM F 963–08 and section 4.27 of ASTM F 963–07e1 (toy chests) are considered consumer product safety standards issued by the Commission under section 9 of the CPSA.

We anticipate the ASTM F963–08 standard is likely to be revised and updated in the future. Given this possibility, the Commission seeks comments now on how to make the transition in testing requirements as clear and efficient as possible should the standard change.

We note that ordinarily, when the Commission bases a mandatory requirement on a voluntary standard, we incorporate the voluntary standard by reference, in accordance with the rules of the Office of the Federal Register. *See* 1 CFR part 51. However, in this instance, ASTM F 963 became a consumer product safety standard by operation of law, rather than by an act of the Commission. *See* Public Law 110–314 § 106(a), (g). Therefore the Commission does not need to incorporate ASTM F 963 by reference.

We also note that certain provisions of ASTM F 963–08 and section 4.27 of ASTM F 963–07e1 will not be subject to third party testing and therefore we will not be accepting accreditations to those excepted sections. The exceptions are as follows:

- Those sections of ASTM F 963–08 that address food and cosmetics, products traditionally outside the Commission's jurisdiction.
- Those sections of ASTM F 963–08 that pertain to the manufacturing process and thus, cannot be evaluated meaningfully by a test of the finished product (*e.g.,* the purified water provision at section 4.3.6.1).
- Requirements for labeling, instructional literature, or producer's markings in ASTM F 963–08 or section 4.27 of ASTM F 963–07e1. We have taken similar positions in other contexts. For example, the Commission has stated that it will not require testing and certification to the labeling requirements under the Federal Hazardous Substances Act, 15 U.S.C. 1261–1278. *See* 74 FR 68588, 68591 (Dec. 28, 2009) (Notice of Commission Action on the Stay of Enforcement of Testing and Certification Requirements). We also do not require third party testing for the labeling requirements for children's sleepwear under the Flammable Fabrics Act, 15 U.S.C. 1191–1204. *See* 75 FR 70911, 70913 (Nov. 19, 2010) (Third Party Testing for Certain Children's Products; Children's Sleepwear, Sizes 0 Through 6X and 7 Through 14: Requirements for Accreditation of Third Party Conformity Assessment Bodies).
- Those sections of ASTM F 963–08 that involve assessments that are conducted by the unaided eye and without any sort of tool or device.
- Section 4.3.8 of ASTM F 963–08, pertaining to a specific phthalate, because section 108 of the CPSIA specifically addresses phthalates and will be the subject of a separate notice of requirements.

In sum, the Commission will only require certain provisions of ASTM F 963–08 and Section 4.27 of ASTM F 963–07e1 to be subject to third party testing and therefore we will only accept the accreditation of third party conformity assessment bodies for testing under the following toy safety standards:

- ASTM F 963–07e1:

—Section 4.27—Toy Chests (except labeling and/or instructional literature requirements).

- ASTM F 963–08:

—Section 4.3.5.2, Surface Coating Materials—Soluble Test for Metals.[2]
—Section 4.3.6.3, Cleanliness of Liquids, Pastes, Putties, Gels, and Powders (except for cosmetics and tests on formulations used to prevent microbial degradation).
—Section 4.3.7, Stuffing Materials.
—Section 4.5, Sound Producing Toys.
—Section 4.6, Small Objects (except labeling and/or instructional literature requirements).
—Section 4.7, Accessible Edges (except labeling and/or instructional literature requirements).
—Section 4.8, Projections.
—Section 4.9, Accessible Points (except labeling and/or instructional literature requirements).
—Section 4.10, Wires or Rods.
—Section 4.11, Nails and Fasteners.
—Section 4.12, Packaging Film.
—Section 4.13, Folding Mechanisms and Hinges.
—Section 4.14, Cords, Straps, and Elastics.
—Section 4.15, Stability and Overload Requirements.
—Section 4.16, Confined Spaces.
—Section 4.17, Wheels, Tires, and Axles.
—Section 4.18, Holes, Clearances, and Accessibility of Mechanisms.
—Section 4.19, Simulated Protective Devices (except labeling and/or instructional literature requirements).
—Section 4.20.1, Pacifiers with Rubber Nipples/Nitrosamine Test.
—Section 4.20.2, Toy Pacifiers.
—Section 4.21, Projectile Toys.
—Section 4.22, Teethers and Teething Toys.
—Section 4.23.1, Rattles with Nearly Spherical, Hemispherical, or Circular Flared Ends.
—Section 4.24, Squeeze Toys.
—Section 4.25, Battery-Operated Toys (except labeling and/or instructional literature requirements).
—Section 4.26, Toys Intended to Be Attached to a Crib or Playpen (except labeling and/or instructional literature requirements).
—Section 4.27, Stuffed and Beanbag-Type Toys.
—Section 4.30, Toy Gun Marking.
—Section 4.32, Certain Toys with Spherical Ends.
—Section 4.35, Pompoms.
—Section 4.36, Hemispheric-Shaped Objects.
—Section 4.37, Yo-Yo Elastic Tether Toys.
—Section 4.38, Magnets (except labeling and/or instructional literature requirements).
—Section 4.39, Jaw Entrapment in Handles and Steering Wheels.

We note that the ASTM toy safety standards cover toys intended for use by children under 14 years of age. *See, e.g.*, section 1.3 of ASTM F 963–08. However, only ''children's products'' are required to be third party tested in support of the children's product certificate required by section 14(a)(2) of the CPSA. Section 3(a)(2) of the CPSA defines ''children's product,'' to mean, *inter alia*, ''a consumer product designed or intended primarily for children 12 years of age or younger.'' To the extent that there are products subject to ASTM F 963–08 and/or section 4.27 of ASTM F 963–07e1 that

[2] Products subject to 16 CFR part 1303, *Ban of Lead-Containing Paint and Certain Consumer Products Bearing Lead-Containing Paint,* that have been tested by a CPSC-accepted third party conformity assessment body and found not to exceed the lead limit in 16 CFR part 1303, do not need to be tested to the lead solubility standard in section 4.3.5.2 of ASTM F 963–08.

are not ''children's products,'' as that term is defined in the CPSA, such products do not need to be third party tested in support of the certification required by section 14 of the CPSA.

Although section 14(a)(3)(B)(vi) of the CPSA directs the CPSC to publish a notice of requirements for accreditation of third party conformity assessment bodies to assess conformity with ''all other children's product safety rules,'' this notice of requirements is limited to the safety standards identified immediately above.

The CPSC also recognizes that section 14(a)(3)(B)(vi) of the CPSA is captioned: ''All Other Children's Product Safety Rules''; however, the body of the statutory requirement refers only to ''other children's product safety rules.'' Nevertheless, section 14(a)(3)(B)(vi) of the CPSA could be construed to require a notice of requirements for ''all'' other children's product safety rules, rather than a notice of requirements for ''some'' or ''certain'' children's product safety rules. However, whether a particular rule represents a ''children's product safety rule'' may be subject to interpretation, and Commission staff is continuing to evaluate which rules, regulations, standards, or bans are ''children's product safety rules.'' The CPSC intends to issue additional notices of requirements for other rules that the Commission determines to be ''children's product safety rules.''

This notice of requirements applies to all third party conformity assessment bodies as described in section 14(f)(2) of the CPSA. Generally speaking, such third party conformity assessment bodies are: (1) Third party conformity assessment bodies that are not owned, managed, or controlled by a manufacturer or private labeler of a children's product to be tested by the third party conformity assessment body for certification purposes; (2) ''firewalled'' conformity assessment bodies (those that are owned, managed, or controlled by a manufacturer or private labeler of a children's product to be tested by the third party conformity assessment body for certification purposes and that seek accreditation under the additional statutory criteria for ''firewalled'' conformity assessment bodies); and (3) third party conformity assessment bodies owned or controlled, in whole or in part, by a government.

The Commission requires baseline accreditation of each category of third party conformity assessment body to the International Organization for Standardization (ISO)/International Electrotechnical Commission (IEC) Standard 17025:2005, ''General Requirements for the Competence of Testing and Calibration Laboratories.'' The accreditation must be by an accreditation body that is a signatory to the International Laboratory Accreditation Cooperation-Mutual Recognition Arrangement (ILAC–MRA), and the scope of the accreditation must include clear references to those sections of ASTM F 963–08 and/or 4.27 of ASTM F 963–07e1 identified earlier in part I of this document for which the third party conformity assessment body seeks CPSC acceptance.

(Descriptions of the history and content of the ILAC–MRA approach and of the requirements of the ISO/IEC 17025:2005 laboratory accreditation standard are provided in the CPSC staff briefing memorandum ''Third Party Conformity Assessment Body Accreditation Requirements for Testing Compliance with 16 CFR Part 1501 (Small Parts Regulations),'' dated November 2008, and available on the CPSC's Web site at: *http://www.cpsc.gov/library/foia/foia09/brief/smallparts.pdf*).

The Commission has established an electronic accreditation registration and listing system that can be accessed via its Web site at: *http://www.cpsc.gov/ABOUT/Cpsia/labaccred.html*.

The Commission stayed the enforcement of certain provisions of section 14(a) of the CPSA in a notice published in the **Federal Register** on February 9, 2009 (74 FR 6396); the stay applied to testing and certification of various products, including those covered by the safety standards in ASTM F 963. On December 28, 2009 the Commission published a notice in the **Federal Register** (74 FR 68588) revising the terms of the stay. One section of the December 28, 2009 notice addressed ''Consumer Products or Children's Products Where the Commission Is Continuing the Stay of Enforcement Until Further Notice,'' due to factors such as pending rulemaking proceedings affecting the product or the absence of a notice of requirements. The ASTM F 963 testing and certification requirements were included in that section of the December 28, 2009 notice. The absence of a notice of requirements prevented the testing and certification stay from being lifted with regard to toys subject to ASTM F 963. While the publication of this notice would have had the effect of lifting the testing and certification stay with regard to ASTM F 963, at the decisional meeting on July 20, 2011, the Commission voted to stay enforcement of the testing and certification requirements of section 14 of the CPSA with respect to toys subject to ASTM F 963 until December 31, 2011.

Accordingly, each manufacturer of a children's product covered by F 963–08 and/or section 4.27 of ASTM F 963–07e1 (toy chests) must have any such product manufactured after December 31, 2011, tested by a third party conformity assessment body accredited to do so and must issue a certificate of compliance with applicable sections of ASTM F 963–08 and/or section 4.27 of ASTM F 963–07e1 based on that testing. (Under the CPSA, the term ''manufacturer'' includes anyone who manufactures or imports a product.)

This notice of requirements is exempt from the notice and comment rulemaking requirements of the Administrative Procedure Act, 5 U.S.C. 553 (*see* section 14(a)(3)(G) of the CPSA, as added by section 102(a)(2) of the CPSIA (15 U.S.C. 2063(a)(3)(G)).

II. Accreditation Requirements

A. Baseline Third Party Conformity Assessment Body Accreditation Requirements

For a third party conformity assessment body to be accredited to test children's products for conformity with one or more of the ASTM F 963 toy standards identified earlier in part I of this document, it must be accredited by an ILAC–MRA signatory accrediting body, and the accreditation must be registered with, and accepted by, the Commission. A listing of ILAC–MRA signatory accrediting bodies is available on the Internet at: *http://ilac.org/membersbycategory.html*. The accreditation must be to ISO Standard ISO/IEC 17025:2005, ''General Requirements for the Competence of Testing and Calibration Laboratories,'' and the scope of the accreditation must expressly include references to one or more of the following sections of ASTM F 963–08, *Standard Consumer Safety Specification for Toy Safety,* and/or 4.27 of ASTM F 963–07e1, the consumer product safety standard for toy chests:

- ASTM F 963–07e1:

—Section 4.27—Toy Chests (except labeling and/or instructional literature requirements).

- ASTM F 963–08:

—Section 4.3.5.2, Surface Coating Materials—Soluble Test for Metals.
—Section 4.3.6.3, Cleanliness of Liquids, Pastes, Putties, Gels, and Powders (except for cosmetics and tests on formulations used to prevent microbial degradation).
—Section 4.3.7, Stuffing Materials.
—Section 4.5, Sound Producing Toys.
—Section 4.6, Small Objects (except labeling and/or instructional literature requirements).

—Section 4.7, Accessible Edges (except labeling and/or instructional literature requirements).
—Section 4.8, Projections.
—Section 4.9, Accessible Points (except labeling and/or instructional literature requirements).
—Section 4.10, Wires or Rods.
—Section 4.11, Nails and Fasteners.
—Section 4.12, Packaging Film.
—Section 4.13, Folding Mechanisms and Hinges.
—Section 4.14, Cords, Straps, and Elastics.
—Section 4.15, Stability and Overload Requirements.
—Section 4.16, Confined Spaces.
—Section 4.17, Wheels, Tires, and Axles.
—Section 4.18, Holes, Clearances, and Accessibility of Mechanisms.
—Section 4.19, Simulated Protective Devices (except labeling and/or instructional literature requirements).
—Section 4.20.1, Pacifiers with Rubber Nipples/Nitrosamine Test.
—Section 4.20.2, Toy Pacifiers.
—Section 4.21, Projectile Toys.
—Section 4.22, Teethers and Teething Toys.
—Section 4.23.1, Rattles with Nearly Spherical, Hemispherical, or Circular Flared Ends.
—Section 4.24, Squeeze Toys.
—Section 4.25, Battery-Operated Toys (except labeling and/or instructional literature requirements).
—Section 4.26, Toys Intended to Be Attached to a Crib or Playpen (except labeling and/or instructional literature requirements).
—Section 4.27, Stuffed and Beanbag-Type Toys.
—Section 4.30, Toy Gun Marking.
—Section 4.32, Certain Toys with Spherical Ends.
—Section 4.35, Pompoms.
—Section 4.36, Hemispheric-Shaped Objects.
—Section 4.37, Yo-Yo Elastic Tether Toys.
—Section 4.38, Magnets (except labeling and/or instructional literature requirements).
—Section 4.39, Jaw Entrapment in Handles and Steering Wheels.

A true copy, in English, of the accreditation and scope documents demonstrating compliance with the requirements of this notice must be registered with the Commission electronically. The additional requirements for accreditation of firewalled and governmental conformity assessment bodies are described in parts II.B and II.C of this document below.

The Commission will maintain on its website an up-to-date listing of third party conformity assessment bodies whose accreditations it has accepted and the scope of each accreditation. Subject to the limited provisions for acceptance of ''retrospective'' testing noted in part IV below, once the Commission adds a third party conformity assessment body to that list, the third party conformity assessment body may commence testing children's products to support the manufacturer's certification that the product complies with the applicable toy safety standards identified earlier in part I of this document.

B. Additional Accreditation Requirements for Firewalled Conformity Assessment Bodies

In addition to the baseline accreditation requirements in part II.A of this document above, firewalled conformity assessment bodies seeking accredited status must submit to the Commission copies, in English, of their training documents, showing how employees are trained to notify the Commission immediately and confidentially of any attempt by the manufacturer, private labeler, or other interested party to hide or exert undue influence over the third party conformity assessment body's test results. This additional requirement applies to any third party conformity assessment body in which a manufacturer or private labeler of a children's product to be tested by the third party conformity assessment body owns an interest of 10 percent or more. While the Commission is not addressing common parentage of a third party conformity assessment body and a children's product manufacturer at this time, it will be vigilant to see if this issue needs to be addressed in the future.

As required by section 14(f)(2)(D) of the CPSA, the Commission must formally accept, by order, the accreditation application of a third party conformity assessment body before the third party conformity assessment body can become an accredited firewalled conformity assessment body.

C. Additional Accreditation Requirements for Governmental Conformity Assessment Bodies

In addition to the baseline accreditation requirements of part II.A of this document above, the CPSIA permits accreditation of a third party conformity assessment body owned or controlled, in whole or in part, by a government if:

- To the extent practicable, manufacturers or private labelers located in any nation are permitted to choose conformity assessment bodies that are not owned or controlled by the government of that nation;
- The third party conformity assessment body's testing results are not subject to undue influence by any other person, including another governmental entity;
- The third party conformity assessment body is not accorded more favorable treatment than other third party conformity assessment bodies in the same nation who have been accredited;
- The third party conformity assessment body's testing results are not subject to undue influence by any other person, including another governmental entity;
- The third party conformity assessment body is not accorded more favorable treatment than other third party conformity assessment bodies in the same nation who have been accredited;
- The third party conformity assessment body's testing results are accorded no greater weight by other governmental authorities than those of other accredited third party conformity assessment bodies; and
- The third party conformity assessment body does not exercise undue influence over other governmental authorities on matters affecting its operations or on decisions by other governmental authorities controlling distribution of products based on outcomes of the third party conformity assessment body's conformity assessments.

The Commission will accept the accreditation of a governmental third party conformity assessment body if it meets the baseline accreditation requirements of part II.A of this document above, and meets the additional conditions stated here. To obtain this assurance, CPSC staff will engage the governmental entities relevant to the accreditation request.

III. How Does a Third Party Conformity Assessment Body Apply for Acceptance of Its Accreditation?

The Commission has established an electronic accreditation acceptance and registration system accessed via the Commission's Internet site at: *http://www.cpsc.gov/about/cpsia/labaccred.html.* The applicant provides, in English, basic identifying information concerning its location, the type of accreditation it is seeking, and electronic copies of its accreditation certificate and scope statement from its ILAC–MRA signatory accreditation body, and firewalled third party

conformity assessment body training document(s), if relevant.

Commission staff will review the submission for accuracy and completeness. In the case of baseline third party conformity assessment bodies and government-owned or government-operated conformity assessment bodies, when that review and any necessary discussions with the applicant are satisfactorily completed, the third party conformity assessment body in question is added to the CPSC's list of accredited third party conformity assessment bodies at: *http://www.cpsc.gov/about/cpsia/labaccred.html*. In the case of a firewalled conformity assessment body seeking accredited status, when staff's review is complete, staff transmits its recommendation on accreditation to the Commission for consideration. (A third party conformity assessment body that may ultimately seek acceptance as a firewalled third party conformity assessment body also can initially request acceptance as a third party conformity assessment body accredited for testing of children's products other than those of its owners.) If the Commission accepts a staff recommendation to accredit a firewalled conformity assessment body, the firewalled conformity assessment body will be added to the CPSC's list of accredited third party conformity assessment bodies. In each case, the Commission will notify the third party conformity assessment body electronically of acceptance of its accreditation. All information to support an accreditation acceptance request must be provided in the English language.

Subject to the limited provisions for acceptance of ''retrospective'' testing noted in part IV of this document below, once the Commission adds a third party conformity assessment body to the list, the third party conformity assessment body may begin testing children's products to support certification of compliance with the applicable toy safety standards identified earlier in part I of this document for which it has been accredited.

IV. Limited Acceptance of Children's Product Certifications Based on Third Party Conformity Assessment Body Testing Prior to the Commission's Acceptance of Accreditation

The Commission will accept a certificate of compliance with the applicable sections of *Standard Consumer Safety Specification for Toy Safety*, F 963–08 and/or section 4.27 (toy chests) from ASTM F 963–07e1 based on testing performed by an accredited third party conformity assessment body (including a government-owned or -controlled conformity assessment body, and a firewalled conformity assessment body) before the Commission's acceptance of its accreditation if:

- At the time of product testing, the product was tested by a third party conformity assessment body that was ISO/IEC 17025 accredited by an accreditation body that is a signatory to the ILAC–MRA. For firewalled conformity assessment bodies, the firewalled conformity assessment body must be one that the Commission accredited, by order, at or before the time the product was tested, even though the order will not have included the test methods specified in this notice. If the third party conformity assessment body has not been accredited by a Commission order as a firewalled conformity assessment body, the Commission will not accept a certificate of compliance based on testing performed by the third party conformity assessment body before it is accredited, by Commission order, as a firewalled conformity assessment body;
- The third party conformity assessment body's application for testing to the toy standard section(s) under which the test(s) was conducted is accepted by the CPSC on or before October 31, 2011;
- With regard to tests conducted under F 963–08, the product was tested to the applicable section(s) on or after May 13, 2009; with regard to tests conducted under section 4.27 of F 963–07e1, the product was tested on or after August 14, 2008;
- The accreditation scope in effect for the third party conformity assessment body at the time of testing expressly included testing to the toy standard section(s) under which the test(s) was conducted;
- The test results show compliance with the applicable current toy standards; and
- The third party conformity assessment body's accreditation, including inclusion in its scope of the toy standard section(s) under which the test(s) was conducted, remains in effect through the effective date for mandatory third party testing and manufacturer certification for conformity with ASTM F 963–08 and/or section 4.27 of ASTM F 963–07e1.

Dated: July 22, 2011.

Todd A. Stevenson,

Secretary, Consumer Product Safety Commission.

[FR Doc. 2011–22235 Filed 8–30–11; 8:45 am]

BILLING CODE 6355–01–P

DEPARTMENT OF DEFENSE

Department of the Navy

Notice of Availability of Government-Owned Inventions; Available for Licensing

AGENCY: Department of the Navy, DoD.

ACTION: Notice.

SUMMARY: The inventions listed below are assigned to the United States Government as represented by the Secretary of the Navy and are available for licensing by the Department of the Navy.

The following patents are available for licensing: U.S. Patent Application 12/537,852: Air Conditioning System, Navy Case PAX83, filed on August 07, 2009; U.S. Patent Application Number 13/009,281: Low-VOC Siloxane Compositions, Navy Case PAX66, filed January 19, 2011; U.S. Patent Application Number 12/956,112: Aerosol Electrical Contact Cleaning and Lubricating Compound, Navy Case PAX59, filed November 30, 2010; U.S. Patent Application Number 13/053,769: SCR Module Dynamic Counter Tester, Navy Case PAX57, filed March 22, 2011; U.S. Patent Application Number 12/404,602: Quick Release Fitting; Navy Case PAX18, filed March 16, 2009; U.S. Patent Application 12/404,550: Optical Subassembly Packing Configuration, Navy Case 97945, filed March 16, 2009; U.S. Patent No. 7,986,585: Reception of Uplink Data From Sonobuoys, issued July 26, 2011.

ADDRESSES: Request for data and inventor interviews should be directed to Mr. Paul Fritz, Naval Air Warfare Center Aircraft Division, Business and Partnership Office, Office of Research and Technology Applications, Building 505, 22473 Millstone Road, Patuxent River, MD 20670, 301–342–5586 or e-mail *paul.fritz@navy.mil.*

DATES: Request for data, samples, and inventor interviews should be made prior to August 31, 2011.

FOR FURTHER INFORMATION CONTACT: Mr. Paul Fritz, Naval Air Warfare Center Aircraft Division, Business and Partnership Office, Office of Research and Technology Applications, Building 505, 22473 Millstone Road, Patuxent River, MD 20670, 301–342–5586 or e-mail *paul.fritz@navy.mil.*

SUPPLEMENTARY INFORMATION: The U.S. Navy intends to move expeditiously to license these inventions. All licensing application packages and commercialization plans must be returned to Naval Air Warfare Center Aircraft Division, Business and Partnership Office, Office of Research

and Technology Applications, Building 505, 22473 Millstone Road, Patuxent River, MD 20670.

The Navy, in its decisions concerning the granting of licenses, will give special consideration to existing licensees, small business firms, and consortia involving small business firms. The Navy intends to ensure that its licensed inventions are broadly commercialized throughout the United States.

A Patent Cooperation Treaty application may be filed for each of the patents as noted above. The Navy intends that licensees interested in a license in territories outside of the United States will assume foreign prosecution and pay the cost of such prosecution.

Authority: 35 U.S.C. 207, 37 CFR part 404.

Dated: August 24, 2011.

J. M. Beal,

Lieutenant Commander, Judge Advocate General's Corps, U.S. Navy, Federal Register Liaison Officer.

[FR Doc. 2011–22254 Filed 8–30–11; 8:45 am]

BILLING CODE 3810–FF–P

DEPARTMENT OF DEFENSE

Department of the Navy

Meeting of the U.S. Naval Academy Board of Visitors

AGENCY: Department of the Navy, DoD.

ACTION: Notice of partially closed meeting.

SUMMARY: The U.S. Naval Academy Board of Visitors will meet to make such inquiry, as the Board shall deem necessary, into the state of morale and discipline, the curriculum, instruction, physical equipment, fiscal affairs, and academic methods of the Naval Academy. The executive session of this meeting from 11 a.m. to 12 p.m. on September 19, 2011, will include discussions of disciplinary matters, law enforcement investigations into allegations of criminal activity, and personnel issues at the Naval Academy, the disclosure of which would constitute a clearly unwarranted invasion of personal privacy. For this reason, the executive session of this meeting will be closed to the public.

DATES: The open session of the meeting will be held on September 19, 2011, from 8 a.m. to 11 a.m. The closed session of this meeting will be the executive session held from 11 a.m. to 12 p.m.

ADDRESSES: The meeting will be held in Washington, DC. The meeting will be handicap accessible.

FOR FURTHER INFORMATION CONTACT: Lieutenant Commander Travis Haire, USN, Executive Secretary to the Board of Visitors, Office of the Superintendent, U.S. Naval Academy, Annapolis, MD 21402–5000, 410–293–1503.

SUPPLEMENTARY INFORMATION: This notice of meeting is provided per the Federal Advisory Committee Act, as amended (5 U.S.C. App.). The executive session of the meeting from 11 a.m. to 12 p.m. on September 19, 2011, will consist of discussions of law enforcement investigations into allegations of criminal activity, new and pending administrative/minor disciplinary infractions and nonjudicial punishments involving the Midshipmen attending the Naval Academy to include but not limited to individual honor/conduct violations within the Brigade, and personnel issues. The discussion of such information cannot be adequately segregated from other topics, which precludes opening the executive session of this meeting to the public. Accordingly, the Secretary of the Navy has determined in writing that the meeting shall be partially closed to the public because the discussions during the executive session from 11 a.m. to 12 p.m. will be concerned with matters coming under sections 552b(c)(5), (6), and (7) of title 5, United States Code.

Dated: August 24, 2011.

J.M. Beal,

Lieutenant Commander, Judge Advocate General's Corps, U.S. Navy, Federal Register Liaison Officer.

[FR Doc. 2011–22260 Filed 8–30–11; 8:45 am]

BILLING CODE 3810–FF–P

DEPARTMENT OF DEFENSE

Department of the Navy

Notice of Proposed Administrative Cost Recovery Settlement Pursuant to the Comprehensive Environmental Response, Compensation and Liability Act For Response Costs Incurred at Marine Corps Logistics Base Barstow, CA

AGENCY: Department of the Navy, DoD.

ACTION: Notice.

SUMMARY: In accordance with Section 122(h) of the Comprehensive Environmental Response, Compensation, and Liability Act (CERCLA), 42 U.S.C. 9622(h), the Department of the Navy (DoN) gives notice that a proposed Administrative Agreement for the Recovery of Past Costs in the Matter of Marine Corps Logistics Base, Yermo Annex, Barstow, California, DON CERCLA Administrative Docket No. 2011–0001, pertaining to environmental contamination at the Marine Corps Logistics Base in Barstow, California (the ''Site''), located in San Bernardino County, California. In this matter, the DoN served a demand, involving civil claims under Section 107 of CERCLA, 42 U.S.C. 9607, upon CalNev Pipe Line Company (CalNev) for recovery of response costs incurred by the DON at the Site.

The proposed Administrative Settlement resolves the DON's claims by requiring CalNev to pay the DoN $500,000 in reimbursement of the DON's past response costs. Pursuant to Section 122(h) of CERCLA, 42 U.S.C. 9622(h), the Department of Justice has provided its approval of this proposed Administrative Settlement. Further, in accordance with this Section 122(i) of CERCLA, 42 U.S.C. 9622(i), the DoN is receiving public comment on this proposed settlement for thirty (30) days from the date of this publication. Comments should be addressed to the Associate General Counsel (Litigation), United States Department of Navy, Office of General Counsel, 720 Kennon St. SE., Bldg. 36, Rm. 233, Washington, DC 20374–5013 or e-mailed to *page.turney@navy.mil* and should refer to The Matter of Marine Corps Logistics Base, Yermo Annex, Barstow, California, DON CERCLA Administrative Docket No. 11–0001.

A copy of the proposed Administrative Settlement may be either obtained from J. Page Turney or examined at: United States Department of Navy, Office of General Counsel, 720 Kennon St. SE., Bldg. 36, Rm. 233, Washington, DC 20374–5013. *Contact:* J. Page Turney: 202–685–6947; *page.turney@navy.mil.*

Dated: August 24, 2011.

J. M. Beal,

Lieutenant Commander, Judge Advocate General's Corps, U.S. Navy, Federal Register Liaison Officer.

[FR Doc. 2011–22262 Filed 8–30–11; 8:45 am]

BILLING CODE 3810–FF–P

DEPARTMENT OF ENERGY

Notice of Intent To Prepare an Environmental Assessment for a Radiological Work and Storage Building at the Knolls Atomic Power Laboratory Kesselring Site

AGENCY: Naval Nuclear Propulsion Program, Department of Energy.

ACTION: Notice of intent to prepare an Environmental Assessment.

SUMMARY: Pursuant to the National Environmental Policy Act of 1969, as amended (NEPA) (42 U.S.C. 4321 *et seq.*); the Council on Environmental Quality Regulations for implementing the procedural provisions of NEPA (40 CFR parts 1500–1508); and the Department of Energy (DOE) implementing procedures (10 CFR part 1021); the Naval Nuclear Propulsion Program (NNPP) announces its intent to prepare an Environmental Assessment (EA) for a radiological work and storage building at the Knolls Atomic Power Laboratory (KAPL) Kesselring Site in West Milton, New York. A new facility is needed to streamline radioactive material handling and storage operations, permit demolition of aging facilities, and accommodate efficient maintenance of existing nuclear reactors.

DATES: Interested parties are invited to provide comments on environmental issues and concerns relative to this notice of intent (NOI) and the scope of the EA, on or before September 30, 2011, to ensure full consideration during the preparation of the EA.

ADDRESSES: Written comments may be submitted by mail to: David Delwiche, Naval Reactors Laboratory Field Office, P.O. Box 1069, Schenectady, NY 12301.

Comments provided by e-mail should be submitted to *david.delwiche@nrp.doe.gov.* Comments provided by phone should use 518–395–6366.

FOR FURTHER INFORMATION CONTACT: For further information about this project, contact Mr. David Delwiche, as described above.

SUPPLEMENTARY INFORMATION: The NNPP is responsible for all aspects of U.S. Navy nuclear power and propulsion. These responsibilities include design, maintenance, and safe operation of nuclear propulsion systems throughout their operational life cycles. A crucial component of this mission is to provide prospective Naval nuclear propulsion plant operators and officers with training and certification in the actual hands-on operation of a nuclear propulsion plant. Two land-based training platforms are located at the Knolls Atomic Power Laboratory Kesselring Site near West Milton, Saratoga County, New York.

The developed portion of the Kesselring Site consists of approximately 65 acres of land on an approximately 3900-acre reservation. Facilities on the site include three pressurized water naval nuclear propulsion plants, one of which has been permanently shut down, defueled, and is in the process of being dismantled. The site also contains administrative offices, machine shops, waste storage facilities, oil storage facilities, training facilities, chemistry laboratories, cooling towers and a boiler house.

The NNPP proposes to construct a new radiological work and storage building to (1) Streamline radioactive material handling and storage operations, (2) permit demolition of aging facilities, and (3) accommodate efficient maintenance of existing operating nuclear reactors. Construction of a new facility is needed to ensure that the Kesselring Site continues to meet its mission to provide the Navy highly qualified personnel to operate its nuclear powered fleet of 11 aircraft carriers and 71 commissioned submarines in support of national defense.

The NNPP proposes to construct a new facility within the existing developed area at the Kesselring Site. The proposed EA will address and evaluate the potential environmental impacts associated with operations in the new facility and demolition of existing aged radiological facilities at the Kesselring Site to provide space for the construction of a new facility. The NNPP proposes to evaluate three alternatives in the EA. These alternatives include:

Alternative 1—Build a new radiological work and storage building at the Kesselring Site.

Alternative 2—Build a temporary facility at the Kesselring Site.

No Action Alternative—Continue to use the existing facilities at the Kesselring Site.

The NNPP proposes to address the issues listed below when considering the potential environmental impacts of the proposed alternatives in the EA. This list is presented to facilitate public comment during the scoping period and is not intended to be comprehensive, or to imply any predetermination of impacts. Issues that will be addressed include:

- Potential biological impacts;
- Potential socioeconomic impacts/environmental justice;
- Potential impacts on water resources, including potential impacts on wetland areas;
- Potential impacts on cultural resources;
- Potential impacts to land use;
- Potential human health effects;
- Potential transportation impacts;
- Potential impacts on air quality;
- Potential impacts from waste management;
- Potential cumulative impacts;
- Compliance with applicable Federal and State regulations.

Issued in Washington, DC, on August 18, 2011.

John M. McKenzie,

Director, Regulatory Affairs, Naval Nuclear Propulsion Program.

[FR Doc. 2011–22269 Filed 8–30–11; 8:45 am]

BILLING CODE 6450–01–P

DEPARTMENT OF ENERGY

Energy Efficiency and Renewable Energy Advisory Committee (ERAC)

AGENCY: Department of Energy, Office of Energy Efficiency and Renewable Energy.

ACTION: Notice of open meeting.

SUMMARY: The purpose of the ERAC is to provide advice and recommendations to the Secretary of Energy on the research, development, demonstration, and deployment priorities within the field of energy efficiency and renewable energy. The Federal Advisory Committee Act, Public Law 92–463, 86 Stat. 770, requires that agencies publish notice of an advisory committee meeting in the **Federal Register**.

DATES: Friday, September 23, 2011, 9 a.m.–3 p.m.

ADDRESSES: San Mateo Marriott Hotel, 1770 South Amphlett Blvd., San Mateo, CA 94402.

FOR FURTHER INFORMATION CONTACT: *erac@ee.doe.gov.*

SUPPLEMENTARY INFORMATION:

Purpose of Meeting: To provide advice and recommendations to the Secretary of Energy on the research, development, demonstration, and deployment priorities within the field of energy efficiency and renewable energy.

Tentative Agenda: (Subject to change; updates will be posted on *http://www.erac.energy.gov*):

- Updates from ERAC's Subcommittees.
- EERE Impact Assessments.

Public Participation: Members of the public are welcome to observe the business of the meeting and make oral statements during the specified period for public comment. The public comment period will take place between 2:30 p.m. and 3 p.m. during the day of the meeting (Friday, September 23, 2011). To attend the meeting and/or to make oral statements regarding any of the items on the agenda, e-mail *erac@ee.doe.gov.* In the e-mail, please indicate your name, organization (if appropriate), citizenship, and contact information.

Members of the public will be heard in the order in which they sign up for the Public Comment Period. Time

allotted per speaker will depend on the number of individuals who wish to speak but will not exceed 5 minutes. Reasonable provision will be made to include the scheduled oral statements on the agenda. The chair of the committee will make every effort to hear the views of all interested parties and to facilitate the orderly conduct of business.

Participation in the meeting is not a prerequisite for submission of written comments. ERAC invites written comments from all interested parties. If you would like to file a written statement with the committee, you may do so either by submitting a hard or electronic copy before or after the meeting. Electronic copy of written statements should be e-mailed to *erac@ee.doe.gov.*

Minutes: The minutes of the meeting will be available for public review at *http://www.erac.energy.gov.*

Issued in Washington, DC on August 25, 2011.

Rachel Samuel,

Deputy Committee Management Officer.

[FR Doc. 2011–22270 Filed 8–30–11; 8:45 am]

BILLING CODE 6450–01–P

ENVIRONMENTAL PROTECTION AGENCY

[FRL–9457–8; Docket ID No. EPA–HQ–ORD–2011–0390]

Draft Toxicological Review of 1,4–Dioxane: In Support of Summary Information on the Integrated Risk Information System (IRIS)

AGENCY: Environmental Protection Agency (EPA)

ACTION: Notice of public comment period and listening session.

SUMMARY: EPA is announcing a 60-day public comment period and a public listening session for the external review draft human health assessment titled, ''Toxicological Review of 1,4–Dioxane: In Support of Summary Information on the Integrated Risk Information System (IRIS)'' (EPA/635/R–11/003). New studies regarding the toxicity of 1,4-dioxane through the inhalation route of exposure are available that were not included in the 1,4-dioxane assessment that was posted on the IRIS database in 2010 (U.S. EPA, 2010). These studies have been incorporated into the previously posted assessment for review (U.S. EPA, 2010). The draft assessment was prepared by the National Center for Environmental Assessment (NCEA) within the EPA Office of Research and Development (ORD). EPA is releasing this draft assessment solely for the purpose of pre-dissemination peer review under applicable information quality guidelines. This draft assessment has not been formally disseminated by EPA. It does not represent and should not be construed to represent any Agency policy or determination. After public review and comment, an EPA contractor will convene an expert panel for independent external peer review of this draft assessment. The public comment period and external peer review meeting are separate processes that provide opportunities for all interested parties to comment on the assessment. The external peer review meeting will be scheduled at a later date and announced in the **Federal Register**. Public comments submitted during the public comment period will be provided to the external peer reviewers before the panel meeting and considered by EPA in the disposition of public comments. Public comments received after the public comment period closes will not be submitted to the external peer reviewers and will only be considered by EPA if time permits.

The listening session will be held on October 18, 2011, during the public comment period for this draft assessment. The purpose of the listening session is to allow all interested parties to present scientific and technical comments on draft IRIS health assessments to EPA and other interested parties attending the listening session. EPA welcomes the comments that will be provided to the Agency by the listening session participants. The comments will be considered by the Agency as it revises the draft assessment after the independent external peer review. If listening session participants would like EPA to share their comments with the external peer reviewers, they should also submit written comments during the public comment period using the detailed and established procedures described in the **SUPPLEMENTARY INFORMATION** section of this notice.

DATES: The public comment period begins August 31, 2011, and ends October 31, 2011. Comments should be in writing and must be received by EPA by October 31, 2011.

The listening session on the draft assessment for 1,4-dioxane will be held on October 18, 2011, beginning at 9 a.m. and ending at 4 p.m., Eastern Daylight Time or when the last presentation has been completed. To attend the listening session, interested parties should register no later than October 11, 2011. To present at the listening session, indicate in your registration that you would like to make oral comments at the session and provide the length of your presentation. To attend the listening session, register by October 11, 2011 via e-mail at *bcolon@versar.com* (subject line: 1,4-Dioxane Listening Session), by phone: 703–750–3000, ext. 6727, or toll free at 1–800–2–VERSAR (ask for Betzy Colon, the 1,4-Dioxane Listening Session Coordinator), or by faxing a registration request to 703–642–6809 (please reference the ''1,4-Dioxane Listening Session'' and include your name, title, affiliation, full address and contact information). When you register, please indicate if you will need audio-visual equipment (e.g., laptop computer and slide projector). In general, each presentation should be no more than 30 minutes. If, however, there are more requests for presentations than the allotted time allows, then the time limit for each presentation will be adjusted. A copy of the agenda for the listening session will be available at the meeting. If no speakers have registered by October 11, 2011, the listening session will be cancelled, and EPA will notify those registered of the cancellation.

ADDRESSES: The draft ''Toxicological Review of 1,4-Dioxane: In Support of Summary Information on the Integrated Risk Information System (IRIS)'' is available primarily via the Internet on the NCEA home page under the Recent Additions and Publications menus at *http://www.epa.gov/ncea.* A limited number of paper copies are available from the Information Management Team (Address: Information Management Team, National Center for Environmental Assessment (Mail Code: 8601P), U.S. Environmental Protection Agency, 1200 Pennsylvania Avenue, NW., Washington, DC 20460; telephone: 703–347–8561; facsimile: 703–347–8691). If you request a paper copy, please provide your name, mailing address, and the draft assessment title.

Comments may be submitted electronically via *http://www.regulations.gov,* by e-mail, by mail, by facsimile, or by hand delivery/courier. Please follow the detailed instructions provided in the **SUPPLEMENTARY INFORMATION** section of this notice.

The listening session on the draft 1,4-dioxane assessment will be held at the EPA offices at Potomac Yard (North Building), Rm. 7100, 2733 South Crystal Drive, Arlington, Virginia 22202. Please note that to gain entrance to this EPA building to attend the meeting, you must have photo identification and must register at the guard's desk in the lobby. The guard will retain your photo identification and will provide you with

a visitor's badge. At the guard's desk, you should provide the name Christine Ross and the telephone number 703–347–8592 to the guard on duty. The guard will contact Ms. Ross who will meet you in the reception area to escort you to the meeting room. When you leave the building, please return your visitor's badge to the guard and you will receive your photo identification.

A teleconference line will also be available for registered attendees/speakers. The teleconference number is 866–299–3188, and the access code is 926–378–7897, followed by the pound sign (#). The teleconference line will be activated at 8:45 a.m., and you will be asked to identify yourself and your affiliation at the beginning of the call.

Information on Services for Individuals with Disabilities: EPA welcomes public attendance at the 1,4-dioxane listening session and will make every effort to accommodate persons with disabilities. For information on access or services for individuals with disabilities, please contact Christine Ross by phone at 703–347–8592 or by e-mail at *IRISListeningSession@epa.gov.* To request accommodation for a disability, please contact Ms. Ross, preferably at least 10 days prior to the meeting, to give EPA as much time as possible to process your request.

Additional Information: For information on the docket, *http://www.regulations.gov,* or the public comment period, please contact the Office of Environmental Information (OEI) Docket (Mail Code: 2822T), U.S. Environmental Protection Agency, 1200 Pennsylvania Ave., NW, Washington, DC 20460; telephone: 202–566–1752; facsimile: 202–566–1753; or e-mail: *ORD.Docket@epa.gov.*

For information on the public listening session, please contact Christine Ross, IRIS Staff, National Center for Environmental Assessment (Mail Code: 8601P), U.S. Environmental Protection Agency, 1200 Pennsylvania Avenue, NW., Washington, DC 20460; telephone: 703–347–8592; facsimile: 703–347–8689; or e-mail: *IRISListeningSession@epa.gov.*

For information on the draft assessment, please contact Patricia Gillespie, National Center for Environmental Assessment [Mail Code: B–243–01], U.S. Environmental Protection Agency, National Center for Environmental Assessment, Office of Research and Development

U.S. Environmental Protection Agency, Research Triangle Park, NC 27711; telephone: 919–541–1964; facsimile: 919–541–2985; or e-mail: *FRN_Questions@epa.gov.*

SUPPLEMENTARY INFORMATION:

I. Information About IRIS

EPA's IRIS is a human health assessment program that evaluates quantitative and qualitative risk information on effects that may result from exposure to chemical substances found in the environment. Through the IRIS Program, EPA provides the highest quality science-based human health assessments to support the Agency's regulatory activities. The IRIS database contains information for more than 540 chemical substances that can be used to support the first two steps (hazard identification and dose-response evaluation) of the risk assessment process. When supported by available data, IRIS provides oral reference doses (RfDs) and inhalation reference concentrations (RfCs) for chronic noncancer health effects and cancer assessments. Combined with specific exposure information, government and private entities use IRIS to help characterize public health risks of chemical substances in a site-specific situation and thereby support risk management decisions designed to protect public health.

II. How To Submit Comments to the Docket at *http://www.regulations.gov*

Submit your comments, identified by Docket ID No. EPA–HQ–ORD–2011–0390, by one of the following methods:

- *http://www.regulations.gov:* Follow the on-line instructions for submitting comments.
- *E-mail: ORD.Docket@epa.gov.*
- *Facsimile:* 202–566–1753.
- *Mail:* Office of Environmental Information (OEI) Docket (Mail Code: 2822T), U.S. Environmental Protection Agency, 1200 Pennsylvania Ave., NW., Washington, DC 20460. The telephone number is 202–566–1752. If you provide comments by mail, please submit one unbound original with pages numbered consecutively, and three copies of the comments. For attachments, provide an index, number pages consecutively with the comments, and submit an unbound original and three copies.
- *Hand Delivery:* The OEI Docket is located in the EPA Headquarters Docket Center, EPA West Building, Room 3334, 1301 Constitution Ave., NW., Washington, DC. The EPA Docket Center Public Reading Room is open from 8:30 a.m. to 4:30 p.m., Monday through Friday, excluding legal holidays. The telephone number for the Public Reading Room is 202–566–1744. Deliveries are only accepted during the docket's normal hours of operation, and special arrangements should be made for deliveries of boxed information. If you provide comments by hand delivery, please submit one unbound original with pages numbered consecutively, and three copies of the comments. For attachments, provide an index, number pages consecutively with the comments, and submit an unbound original and three copies.

Instructions: Direct your comments to Docket ID No. EPA–HQ–ORD–2011–0390. Please ensure that your comments are submitted within the specified comment period. Comments received after the closing date will be marked ''late,'' and may only be considered if time permits. It is EPA's policy to include all comments it receives in the public docket without change and to make the comments available online at *http://www.regulations.gov,* including any personal information provided, unless comments include information claimed to be Confidential Business Information (CBI) or other information whose disclosure is restricted by statute. Do not submit information that you consider to be CBI or otherwise protected through *http://www.regulations.gov* or e-mail. The *http://www.regulations.gov* Web site is an ''anonymous access'' system, which means that EPA will not know your identity or contact information unless you provide it in the body of your comments. If you send e-mail comments directly to EPA without going through *http://www.regulations.gov,* your e-mail address will be automatically captured and included as part of the comments that are placed in the public docket and made available on the Internet. If you submit electronic comments, EPA recommends that you include your name and other contact information in the body of your comments and with any disk or CD–ROM you submit. If EPA cannot read your comments due to technical difficulties and cannot contact you for clarification, EPA may not be able to consider your comments. Electronic files should avoid the use of special characters and any form of encryption and be free of any defects or viruses. For additional information about EPA's public docket, visit the EPA Docket Center homepage at *http://www.epa.gov/epahome/dockets.htm.*

Docket: All documents in the docket are listed in the *http://www.regulations.gov index.* Although listed in the index, some information is not publicly available, *e.g.,* CBI or other information whose disclosure is restricted by statute. Certain other material, such as copyrighted material, will be publicly available only in hard copy. Publicly available docket materials are available either electronically at *http://*

www.regulations.gov or in hard copy at the OEI Docket in the EPA Headquarters Docket Center.

Dated: July 27, 2011.

David A. Bussard,

Acting Director, National Center for Environmental Assessment.

[FR Doc. 2011–22290 Filed 8–30–11; 8:45 am]

BILLING CODE 6560–50–P

ENVIRONMENTAL PROTECTION AGENCY

[FRL–9457–9; Docket ID No. EPA–HQ–ORD–2011–0671]

Draft Toxicological Review of n-Butanol: In Support of Summary Information on the Integrated Risk Information System (IRIS)

AGENCY: Environmental Protection Agency (EPA).

ACTION: Notice of Public Comment Period and Listening Session.

SUMMARY: EPA is announcing a 60-day public comment period and a public listening session for the external review draft human health assessment titled, ''Toxicological Review of n-Butanol: In Support of Summary Information on the Integrated Risk Information System (IRIS)'' (EPA/635/R–11/081A). The draft assessment was prepared by the National Center for Environmental Assessment (NCEA) within the EPA Office of Research and Development (ORD). EPA is releasing this draft assessment solely for the purpose of pre-dissemination peer review under applicable information quality guidelines. This draft assessment has not been formally disseminated by EPA. It does not represent and should not be construed to represent any Agency policy or determination. After public review and comment, an EPA contractor will convene an expert panel for independent external peer review of this draft assessment. The public comment period and external peer review meeting are separate processes that provide opportunities for all interested parties to comment on the assessment. The external peer review meeting will be scheduled at a later date and announced in the **Federal Register**. Public comments submitted during the public comment period will be provided to the external peer reviewers before the panel meeting and considered by EPA in the disposition of public comments. Public comments received after the public comment period closes will not be submitted to the external peer reviewers and will only be considered by EPA if time permits.

The listening session will be held on October 5, 2011, during the public comment period for this draft assessment. The purpose of the listening session is to allow all interested parties to present scientific and technical comments on draft IRIS health assessments to EPA and other interested parties attending the listening session. EPA welcomes the comments that will be provided to the Agency by the listening session participants. The comments will be considered by the Agency as it revises the draft assessment after the independent external peer review. If listening session participants would like EPA to share their comments with the external peer reviewers, they should also submit written comments during the public comment period using the detailed and established procedures described in the **SUPPLEMENTARY INFORMATION** section of this notice.

DATES: The public comment period begins August 31, 2011, and ends October 31, 2011. Comments should be in writing and must be received by EPA by October 31, 2011.

The listening session on the draft assessment for n-Butanol will be held on October 5, 2011, beginning at 9 a.m. and ending at 4 p.m., Eastern Daylight Time or when the last presentation has been completed. To attend the listening session, interested parties should register no later than September 28, 2011. To present at the listening session, indicate in your registration that you would like to make oral comments at the session and provide the length of your presentation. To register, please contact Ms. Stephanie Sarraino at Versar, Inc., by e-mail at *ssarraino@versar.com* or by telephone at 703–750–3000, extension 737. When registering, please reference the n-Butanol listening session, provide your name, organization, contact information, any sponsorship information, whether you will be a speaker or an observer, and if you are a speaker, the approximate length of your presentation. When you register, please indicate if you will need audio-visual equipment (*e.g.,* laptop computer and slide projector). In general, each presentation should be no more than 30 minutes. If, however, there are more requests for presentations than the allotted time allows, then the time limit for each presentation will be adjusted. A copy of the agenda for the listening session will be available at the meeting. If no speakers have registered by September 28, 2011, the listening session will be cancelled, and EPA will notify those registered of the cancellation.

ADDRESSES: The draft ''Toxicological Review of n-Butanol: In Support of Summary Information on the Integrated Risk Information System (IRIS)'' is available primarily via the Internet on the NCEA home page under the Recent Additions and Publications menus at *http://www.epa.gov/ncea.* A limited number of paper copies are available from the Information Management Team (*Address:* Information Management Team, National Center for Environmental Assessment (Mail Code: 8601P), U.S. Environmental Protection Agency, 1200 Pennsylvania Avenue, NW., Washington, DC 20460; *telephone:* 703–347–8561; *facsimile:* 703–347–8691. If you request a paper copy, please provide your name, mailing address, and the draft assessment title.

Comments may be submitted electronically via *http://www.regulations.gov,* by e-mail, by mail, by facsimile, or by hand delivery/courier. Please follow the detailed instructions provided in the **SUPPLEMENTARY INFORMATION** section of this notice.

The listening session on the draft n-Butanol assessment will be held at the EPA offices at Potomac Yard (North Building), Room 7100, 2733 South Crystal Drive, Arlington, Virginia 22202. Please note that to gain entrance to this EPA building to attend the meeting, you must have photo identification and must register at the guard's desk in the lobby. The guard will retain your photo identification and will provide you with a visitor's badge. At the guard's desk, you should provide the name Christine Ross and the telephone number 703–347–8592 to the guard on duty. The guard will contact Ms. Ross who will meet you in the reception area to escort you to the meeting room. When you leave the building, please return your visitor's badge to the guard and you will receive your photo identification.

A teleconference line will also be available for registered attendees/speakers. The teleconference number is 866–299–3188, and the access code is 926–378–7897, followed by the pound sign (#). The teleconference line will be activated at 8:45 a.m., and you will be asked to identify yourself and your affiliation at the beginning of the call.

Information on Services for Individuals with Disabilities: EPA welcomes public attendance at the n-Butanol listening session and will make every effort to accommodate persons with disabilities. For information on access or services for individuals with disabilities, please contact Christine Ross by telephone at 703–347–8592 or by e-mail at *IRISListeningSession@epa.gov.* To

request accommodation for a disability, please contact Ms. Ross, preferably at least 10 days prior to the meeting, to give EPA as much time as possible to process your request.

Additional Information: For information on the docket, *http://www.regulations.gov,* or the public comment period, please contact the Office of Environmental Information (OEI) Docket (Mail Code: 2822T), U.S. Environmental Protection Agency, 1200 Pennsylvania Avenue, NW., Washington, DC 20460; *telephone:* 202–566–1752; *facsimile:* 202–566–1753; or *e-mail: ORD.Docket@epa.gov.*

For information on the public listening session, please contact Christine Ross, IRIS Staff, National Center for Environmental Assessment (Mail Code: 8601P), U.S. Environmental Protection Agency, 1200 Pennsylvania Avenue, NW., Washington, DC 20460; *telephone:* 703–347–8592; *facsimile:* 703–347–8689; or *e-mail: IRISListeningSession@epa.gov.*

For information on the draft assessment, please contact Ambuja Bale, National Center for Environmental Assessment (Mail Code: 8601–P), U.S. Environmental Protection Agency, National Center for Environmental Assessment, Office of Research and Development, U.S. Environmental Protection Agency, 1200 Pennsylvania Avenue, NW., Washington, DC 20460; *telephone:* 703–347–8643; *facsimile:* 703–347–8689; or *e-mail: FRN_Questions@epa.gov.*

SUPPLEMENTARY INFORMATION:

I. Information About IRIS

EPA's IRIS program is a human health assessment program that evaluates quantitative and qualitative risk information on effects that may result from exposure to chemical substances found in the environment. Through the IRIS Program, EPA provides the highest quality science-based human health assessments to support the Agency's regulatory activities. The IRIS database contains information for more than 540 chemical substances that can be used to support the first two steps (hazard identification and dose-response evaluation) of the risk assessment process. When supported by available data, IRIS provides oral reference doses (RfDs) and inhalation reference concentrations (RfCs) for chronic noncancer health effects and cancer assessments. Combined with specific exposure information, government and private entities use IRIS to help characterize public health risks of chemical substances in a site-specific situation and thereby support risk management decisions designed to protect public health.

II. How To Submit Comments to the Docket at http://www.regulations.gov

Submit your comments, identified by Docket ID No. EPA–HQ–ORD–2011–0671, by one of the following methods:

- *http://www.regulations.gov:* Follow the on-line instructions for submitting comments;
- *E-mail: ORD.Docket@epa.gov;*
- *Facsimile:* 202–566–1753;
- *Mail:* Office of Environmental Information (OEI) Docket (Mail Code: 2822T), U.S. Environmental Protection Agency, 1200 Pennsylvania Avenue, NW., Washington, DC 20460. The telephone number is 202–566–1752. If you provide comments by mail, please submit one unbound original with pages numbered consecutively, and three copies of the comments. For attachments, provide an index, number pages consecutively with the comments, and submit an unbound original and three copies; and
- *Hand Delivery:* The OEI Docket is located in the EPA Headquarters Docket Center, EPA West Building, Room 3334, 1301 Constitution Avenue, NW., Washington, DC 20460. The EPA Docket Center Public Reading Room is open from 8:30 a.m. to 4:30 p.m., Monday through Friday, excluding legal holidays. The telephone number for the Public Reading Room is 202–566–1744. Deliveries are only accepted during the Docket's normal hours of operation, and special arrangements should be made for deliveries of boxed information. If you provide comments by hand delivery, please submit one unbound original with pages numbered consecutively, and three copies of the comments. For attachments, provide an index, number pages consecutively with the comments, and submit an unbound original and three copies.

Instructions: Direct your comments to Docket ID No. EPA–HQ–ORD–2011–0671. Please ensure that your comments are submitted within the specified comment period. Comments received after the closing date will be marked ''late,'' and may only be considered if time permits. It is EPA's policy to include all comments it receives in the public docket without change and to make the comments available online at *http://www.regulations.gov,* including any personal information provided, unless comments include information claimed to be Confidential Business Information (CBI) or other information whose disclosure is restricted by statute. Do not submit information that you consider to be CBI or otherwise protected through *http://www.regulations.gov* or e-mail. The *http://www.regulations.gov* Web site is an ''anonymous access'' system, which means that EPA will not know your identity or contact information unless you provide it in the body of your comments. If you send e-mail comments directly to EPA without going through *http://www.regulations.gov,* your e-mail address will be automatically captured and included as part of the comments that are placed in the public docket and made available on the Internet. If you submit electronic comments, EPA recommends that you include your name and other contact information in the body of your comments and with any disk or CD–ROM you submit. If EPA cannot read your comments due to technical difficulties and cannot contact you for clarification, EPA may not be able to consider your comments. Electronic files should avoid the use of special characters and any form of encryption and be free of any defects or viruses. For additional information about EPA's public docket, visit the EPA Docket Center homepage at *http://www.epa.gov/epahome/dockets.htm.*

Docket: All documents in the docket are listed in the *http://www.regulations.gov* index. Although listed in the index, some information is not publicly available, *e.g.,* CBI or other information whose disclosure is restricted by statute. Certain other material, such as copyrighted material, will be publicly available only in hard copy. Publicly available docket materials are available either electronically at *http://www.regulations.gov* or in hard copy at the OEI Docket in the EPA Headquarters Docket Center.

Dated: August 19, 2011.

Joseph DeSantis,

Acting Director, National Center for Environmental Assessment.

[FR Doc. 2011–22294 Filed 8–30–11; 8:45 am]

BILLING CODE 6560–50–P

ENVIRONMENTAL PROTECTION AGENCY

[FRL–9458–2; Docket ID No. EPA–HQ–ORD–2009–0204]

Draft Toxicological Review of Acrylonitrile: In Support of Summary Information on the Integrated Risk Information System (IRIS)

AGENCY: Environmental Protection Agency (EPA).

ACTION: Notice of Extension of Public Comment Period.

SUMMARY: EPA announced a 60-day public comment period on June 30,

2011 (76 FR 38387) for the external review draft human health assessment titled, ''Toxicological Review of Acrylonitrile: In Support of Summary Information on the Integrated Risk Information System (IRIS)'' (EPA/635/R–08/013A). We are extending this notice 30 days at the request of the Acrylonitrile Group. The draft assessment was prepared by the National Center for Environmental Assessment (NCEA) within the EPA Office of Research and Development (ORD). EPA is releasing this draft assessment solely for the purpose of pre-dissemination peer review under applicable information quality guidelines. This draft assessment has not been formally disseminated by EPA. It does not represent and should not be construed to represent any Agency policy or determination. After public review and comment, an EPA contractor will convene an expert panel for independent external peer review of this draft assessment. The public comment period and external peer review meeting are separate processes that provide opportunities for all interested parties to comment on the assessment. The external peer review meeting will be scheduled at a later date and announced in the **Federal Register**. Public comments submitted during the public comment period will be provided to the external peer reviewers before the panel meeting and considered by EPA in the disposition of public comments. Public comments received after the public comment period closes will not be submitted to the external peer reviewers and will only be considered by EPA if time permits.

DATES: The public comment period will be extended to end September 28, 2011. Comments should be in writing and must be received by EPA by September 28, 2011.

ADDRESSES: The draft ''Toxicological Review of Acrylonitrile: In Support of Summary Information on the Integrated Risk Information System (IRIS)'' is available primarily via the Internet on the NCEA home page under the Recent Additions and Publications menus at *http://www.epa.gov/ncea.* A limited number of paper copies are available from the Information Management Team, National Center for Environmental Assessment, Mail Code: 8601P, U.S. Environmental Protection Agency, 1200 Pennsylvania Avenue, NW., Washington, DC 20460; telephone: 703–347–8561; facsimile: 703–347–8691. If you request a paper copy, please provide your name, mailing address, and the draft assessment title.

Comments may be submitted electronically via *http://www.regulations.gov*, by e-mail, by mail, by facsimile, or by hand delivery/courier. Please follow the detailed instructions provided in the **SUPPLEMENTARY INFORMATION** section of the previous **Federal Register** Notice (76 FR 38387).

Additional Information: For information on the docket, *http://www.regulations.gov*, or the public comment period, please contact the Office of Environmental Information (OEI) Docket, Mail Code: 2822T, U.S. Environmental Protection Agency, 1200 Pennsylvania Avenue, NW., Washington, DC 20460; telephone: 202–566–1752; facsimile: 202–566–1753; or e-mail: *ORD.Docket@epa.gov.*

For information on the draft assessment, please contact Susan Rieth, National Center for Environmental Assessment, Mail Code: 8601P, U.S. Environmental Protection Agency, 1200 Pennsylvania Avenue, NW., Washington, DC 20460; telephone: (703) 347–8582; facsimile: (703) 347–8689; or e-mail: *FRN_Questions@epa.gov.*

Dated: August 24, 2011.

Darrell A. Winner,

Acting Director, National Center for Environmental Assessment.

[FR Doc. 2011–22288 Filed 8–30–11; 8:45 am]

BILLING CODE 6560–50–P

ENVIRONMENTAL PROTECTION AGENCY

[EPA–HQ–OPP–2011–0529; FRL–8884–7]

Pesticide Experimental Use Permit; Receipt of Application; Comment Request

AGENCY: Environmental Protection Agency (EPA).

ACTION: Notice.

SUMMARY: This notice announces EPA's receipt of an application 54289–EUP–R from Evonik Degussa Corp., 379 Interpace Parkway, Parsippany, NJ 07054 requesting an experimental use permit (EUP) for Peraclean, treatment of wastewater effluent from oil well fracturing. The Agency has determined that the permit may be of regional and national significance. Therefore, in accordance with 40 CFR 172.11(a), the Agency is soliciting comments on this application.

DATES: Comments must be received on or before September 30, 2011.

ADDRESSES: Submit your comments, identified by docket identification (ID) number EPA–HQ–OPP–2011–0529 by one of the following methods:

- *Federal eRulemaking Portal: http://www.regulations.gov.* Follow the on-line instructions for submitting comments.
- *Mail:* Office of Pesticide Programs (OPP) Regulatory Public Docket (7502P), Environmental Protection Agency, 1200 Pennsylvania Ave., NW., Washington, DC 20460–0001.
- *Delivery:* OPP Regulatory Public Docket (7502P), Environmental Protection Agency, Rm. S–4400, One Potomac Yard (South Bldg.), 2777 S. Crystal Dr., Arlington,VA. Deliveries are only accepted during the Docket Facility's normal hours of operation (8:30 a.m. to 4 p.m., Monday through Friday, excluding legal holidays). Special arrangements should be made for deliveries of boxed information. The Docket Facility telephone number is (703) 305–5805.

Instructions: Direct your comments to docket ID number EPA–HQ–OPP–2011–0529. EPA's policy is that all comments received will be included in the docket without change and may be made available on-line at *http://www.regulations.gov*, including any personal information provided, unless the comment includes information claimed to be Confidential Business Information (CBI) or other information whose disclosure is restricted by statute. Do not submit information that you consider to be CBI or otherwise protected through regulations.gov or e-mail. The regulations.gov Web site is an ''anonymous access'' system, which means EPA will not know your identity or contact information unless you provide it in the body of your comment. If you send an e-mail comment directly to EPA without going through regulations.gov, your e-mail address will be automatically captured and included as part of the comment that is placed in the docket and made available on the Internet. If you submit an electronic comment, EPA recommends that you include your name and other contact information in the body of your comment and with any disk or CD–ROM you submit. If EPA cannot read your comment due to technical difficulties and cannot contact you for clarification, EPA may not be able to consider your comment. Electronic files should avoid the use of special characters, any form of encryption, and be free of any defects or viruses.

Docket: All documents in the docket are listed in the docket index available at *http://www.regulations.gov.* Although listed in the index, some information is not publicly available, *e.g.*, CBI or other information whose disclosure is restricted by statute. Certain other material, such as copyrighted material, is not placed on the Internet and will be

publicly available only in hard copy form. Publicly available docket materials are available either in the electronic docket at *http://www.regulations.gov*, or, if only available in hard copy, at the OPP Regulatory Public Docket in Rm. S–4400, One Potomac Yard (South Bldg.), 2777 S. Crystal Dr., Arlington, VA. The hours of operation of this Docket Facility are from 8:30 a.m. to 4 p.m., Monday through Friday, excluding legal holidays. The Docket Facility telephone number is (703) 305–5805.

FOR FURTHER INFORMATION CONTACT: Demson Fuller, Antimicrobials Division, Office of Pesticide Programs, Environmental Protection Agency, 1200 Pennsylvania Ave., NW., Washington, DC 20460–0001; telephone number: (703) 308–8062; e-mail address: *fuller.demson@epa.gov.*

SUPPLEMENTARY INFORMATION:

I. General Information

A. Does this action apply to me?

This action is directed to the public in general. This action may, however, be of interest to those persons who are or may be required to conduct testing of chemical substances under the Federal Food, Drug, and Cosmetic Act (FFDCA), or the Federal Insecticide, Fungicide, and Rodenticide Act (FIFRA). Since other entities may also be interested, the Agency has not attempted to describe all the specific entities that may be affected by this action. If you have any questions regarding the applicability of this action to a particular entity, consult the person listed under **FOR FURTHER INFORMATION CONTACT**.

B. What should I consider as I prepare my comments for EPA?

1. *Submitting CBI.* Do not submit this information to EPA through regulations.gov or e-mail. Clearly mark the part or all of the information that you claim to be CBI. For CBI information in a disk or CD–ROM that you mail to EPA, mark the outside of the disk or CD–ROM as CBI and then identify electronically within the disk or CD–ROM the specific information that is claimed as CBI. In addition to one complete version of the comment that includes information claimed as CBI, a copy of the comment that does not contain the information claimed as CBI must be submitted for inclusion in the public docket. Information so marked will not be disclosed except in accordance with procedures set forth in 40 CFR part 2.

2. *Tips for preparing your comments.* When submitting comments, remember to:

i. Identify the document by docket ID number and other identifying information (subject heading, **Federal Register** date and page number).

ii. Follow directions. The Agency may ask you to respond to specific questions or organize comments by referencing a Code of Federal Regulations (CFR) part or section number.

iii. Explain why you agree or disagree; suggest alternatives and substitute language for your requested changes.

iv. Describe any assumptions and provide any technical information and/or data that you used.

v. If you estimate potential costs or burdens, explain how you arrived at your estimate in sufficient detail to allow for it to be reproduced.

vi. Provide specific examples to illustrate your concerns and suggest alternatives.

vii. Explain your views as clearly as possible, avoiding the use of profanity or personal threats.

viii. Make sure to submit your comments by the comment period deadline identified.

3. *Environmental justice.* EPA seeks to achieve environmental justice, the fair treatment and meaningful involvement of any group, including minority and/or low income populations, in the development, implementation, and enforcement of environmental laws, regulations, and policies. To help address potential environmental justice issues, the Agency seeks information on any groups or segments of the population who, as a result of their location, cultural practices, or other factors, may have atypical or disproportionately high and adverse human health impacts or environmental effects from exposure to the pesticide(s) discussed in this document, compared to the general population.

II. What action is the Agency taking?

Under Section 5 of the Federal Insecticide, Fungicide and Rodenticide Act (FIFRA), 7 U.S.C. 136c, EPA can allow manufacturers to field test pesticides under development. Manufacturers are required to obtain an EUP before testing new pesticides or new uses of pesticides if they conduct experimental field tests on 10 acres or more of land or one acre or more of water.

Pursuant to 40 CFR 172.11(a), the Agency has determined that the following EUP application may be of regional and national significance, and therefore is seeking public comment on the EUP application:

Submitter: Evonik Degussa Corp., (54289–EUP–R).

Pesticide Chemical(s): Hydrogen Peroxide and Peroxyacetic Acid.

Summary of Request: To test the efficacy of hydrogen peroxide and peroxyacetic acid for treatment against the target organism, autochthonous bacteria when treating oil and gas fracturing in the Chesapeake Energy Well site in Conway, Arkansas.

A copy of the application and any information submitted is available for public review in the docket established for this EUP application as described under **ADDRESSES**.

Following the review of the application and any comments and data received in response to this solicitation, EPA will decide whether to issue or deny the EUP request, and if issued, the conditions under which it is to be conducted. Any issuance of an EUP will be announced in the **Federal Register**.

List of Subjects

Environmental protection, Experimental use permits.

Dated: August 23, 2011.

Jean Harrigan-Farrelly,

Director, Antimicrobials Division, Office of Pesticide Programs.

[FR Doc. 2011–22287 Filed 8–30–11; 8:45 am]

BILLING CODE 6560–50–P

ENVIRONMENTAL PROTECTION AGENCY

[EPA–HQ–OPP–2010–0014; FRL–8885–6]

Product Cancellation Order for Certain Pesticide Registrations

AGENCY: Environmental Protection Agency (EPA).

ACTION: Notice.

SUMMARY: This notice announces EPA's order for the cancellations, voluntarily requested by the registrants and accepted by the Agency, of the products listed in Table 1 of Unit II., pursuant to section 6(f)(1) of the Federal Insecticide, Fungicide, and Rodenticide Act (FIFRA), as amended. This cancellation order follows a January 19, 2011 **Federal Register** Notice of Receipt of Requests from the registrants listed in Table 2 of Unit II. to voluntarily cancel these product registrations. In the January 19, 2011 notice, EPA indicated that it would issue an order implementing the cancellations, unless the Agency received substantive comments within the 180 day comment period that would merit its further review of these requests, or unless the registrants withdrew their requests. One comment was received during the 180-day comment period, but did not merit

further review of the requests to voluntarily cancel certain pesticide registrations. Accordingly, EPA hereby issues in this notice a cancellation order granting the requested cancellations. Any distribution, sale, or use of the products subject to this cancellation order is permitted only in accordance with the terms of this order, including any existing stocks provisions.

DATES: The cancellations are effective August 31, 2011.

FOR FURTHER INFORMATION CONTACT: Maia Tatinclaux, Pesticide Re-evaluation Division (7508P), Office of Pesticide Programs, Environmental Protection Agency, 1200 Pennsylvania Ave., NW., Washington, DC 20460–0001; *telephone number:* (703) 347–0123; *fax number:* (703) 308–8090; *e-mail address: tatinclaux.maia@epa.gov.*

SUPPLEMENTARY INFORMATION:

I. General Information

A. Does this action apply to me?

This action is directed to the public in general, and may be of interest to a wide range of stakeholders including environmental, human health, and agricultural advocates; the chemical industry; pesticide users; and members of the public interested in the sale, distribution, or use of pesticides. Since others also may be interested, the Agency has not attempted to describe all the specific entities that may be affected by this action. If you have any questions regarding the applicability of this action to a particular entity, consult the person listed under **FOR FURTHER INFORMATION CONTACT**.

B. How can I get copies of this document and other related information?

EPA has established a docket for this action under docket identification (ID) number EPA–HQ–OPP–2010–0014. Publicly available docket materials are available either in the electronic docket at *http://www.regulations.gov,* or, if only available in hard copy, at the Office of Pesticide Programs (OPP) Regulatory Public Docket in Rm. S–4400, One Potomac Yard (South Bldg.), 2777 S. Crystal Dr., Arlington, VA. The hours of operation of this Docket Facility are from 8:30 a.m. to 4 p.m., Monday through Friday, excluding legal holidays. The Docket Facility telephone number is (703) 305–5805.

II. What action is the Agency taking?

This notice announces the cancellation, as requested by registrants, of 60 products registered under FIFRA section 3. These registrations are listed in sequence by registration number in Table 1 of this unit.

TABLE 1—PRODUCT CANCELLATIONS

EPA Registration No.	Product name	Active ingredients
000004–00360	Bonide Prometon 3.75% Liquid Vegetation Killer	Prometon.
000004–00414	Total Weed Killer	Prometon.
000004–00446	Bonide Total Vegetation Killer Concentrate	Prometon.
000228–00186	Riverdale 1D + 1DP Low Vol	2,4-D, 2-ethylhexyl ester 2-Ethylhexyl (R)-2-(2,4-dichlorophenoxy) propionate.
000961–00396	Lebanon Moss Control	Ferrous sulfate monohydrate.
001022–00409	Copper Naphthenate WR Wood Preservative Ready to Use.	Copper naphthenate.
001022–00507	Copper Naphthenate 1%	Copper naphthenate.
001022–00528	Copper Naphthenate Concentration 8%	Copper naphthenate.
001022–00568	Chapco CU-Nap 800 EC	Copper naphthenate.
001022–00571	Chapco CU-Nap 400	Copper naphthenate.
001022–00579	Curap 20 Pak	Borax. Copper naphthenate.
001448–00149	T–30–1	2-(Thiocyanomethylthio) benzothiazole.
001448–00150	T–30–2	2-(Thiocyanomethylthio) benzothiazole.
001448–00152	T–5–1	2-(Thiocyanomethylthio) benzothiazole.
001448–00153	T–5–2	2-(Thiocyanomethylthio) benzothiazole.
001677–00199	Quantum TB Disinfectant	Caprylic acid.
002217–00755	Vegetation Killer 150	Prometon.
002217–00756	Vegetation Killer 250	Prometon.
002217–00757	Vegetation Killer 375	Prometon.
003008–00093	Copper 8-Quinolinolate	Copper, bis(8-quinolinolato-N1,O8)-.
004822–00503	8539 Disinfectant Spray Cleaner	1-Octanaminium, N,N-dimethyl-N-octyl-, chloride. 1-Decanaminium, N-decyl-N,N-dimethyl-, chloride. 1-Decanaminium, N,N-dimethyl-N-octyl-, chloride.
004822–00504	Tough Act The Heavy Duty Bathroom Cleaner	Alkyl*dimethyl benzyl ammonium chloride. Alkyl*dimethyl ethylbenzyl ammonium chloride.
004822–00505	Dow Aerosol Disinfectant Bathroom Cleaner	Alkyl*dimethyl benzyl ammonium chloride. Alkyl*dimethyl ethylbenzyl ammonium chloride.
004822–00506	Tough Act The Heavy Duty Aerosol Bathroom Cleaner	Alkyl*dimethyl benzyl ammonium chloride. Alkyl*dimethyl ethylbenzyl ammonium chloride.
004822–00507	Dow Liquid Bathroom Cleaner	Alkyl*dimethyl benzyl ammonium chloride. Alkyl*dimethyl ethylbenzyl ammonium chloride.
007364–00042	Tabex Quick Shot Tablets	Tricloro-s-triazinetrione.
007969–00078	Basagran M-60 Herbicide	MCPA, dimethylamine salt; 3-Isopropyl-1H-2, 1,3-benzothiadiazin-4 (3H)-one-2,2-dioxide, sodium salt.
010707–00005	Magnacide 434	1-(Alkyl* amino)-3-aminopropane hydroxyacetate *(as in fatty acids of coconut oil).
010707–00006	Magnacide 461	1-(Alkyl* amino)-3-aminopropane hydroxyacetate *(as in fatty acids of coconut oil).
010707–00033	Magnacide B-615	1-(Alkyl* amino)-3-aminopropane hydroxyacetate *(as in fatty acids of coconut oil).
010707–00054	Microbiocide 56	1-(Alkyl* amino)-3-aminopropane hydroxyacetate *(as in fatty acids of coconut oil).

TABLE 1—PRODUCT CANCELLATIONS—Continued

EPA Registration No.	Product name	Active ingredients
010707–00055	X-cide 305	1-(Alkyl* amino)-3-aminopropane hydroxyacetate *(as in fatty acids of coconut oil).
019713–00151	Drexel MSMA 8	MSMA.
019713–00267	Drexel MSMA 4 Plus	MSMA.
019713–00278	Drexel MSMA Liquid 6 Plus	MSMA.
019713–00529	Drexel MSMA 600 Herbicide	MSMA.
033955–00454	ACME Vegetation Killer	Prometon.
034704–00816	Liquid Moss Control	Ferric sulfate.
051036–00363	Prompt 5L Herbicide	Atrazine. 3-Isopropyl-1H-2,1,3-benzothiadiazin-4 (3H)-one-2,2-dioxide, sodium salt.
051036–00415	Laddock 5L Herbicide	Atrazine. 3-Isopropyl-1H-2,1,3-benzothiadiazin-4 (3H)-one-2,2-dioxide, sodium salt.
051036–00421	Basagran AG	3-Isopropyl-1H-2,1,3-benzothiadiazin-4 (3H)-one-2,2-dioxide, sodium salt.
053883–00064	Martin's Fire Bait 2	Hydramethylnon.
053883–00065	Martin's Fire Ant Bait 1	Hydramethylnon.
053883–00066	Martin's Insect Bait 2	Hydramethylnon.
053883–00067	Martin's Insect Bait 1	Hydramethylnon.
062719–00339	MSMA 6.6	MSMA.
062719–00340	MSMA Plus "S"	MSMA.
062719–00343	MSMA 51%	MSMA.
066330–00386	Fluroxypyr Technical	Fluroxypyr 1-methylheptyl ester.
086203–00019	Yard and Patio Fogger	Piperonyl butoxide. Ethofenprox. Tetramethrin.
086203–00020	Flying Insect Killer II	Piperonyl butoxide. Ethofenprox. Tetramethrin.
086203–00021	Crawling Insect Killer I	Piperonyl butoxide. Ethofenprox. Tetramethrin.
086203–00022	Premium Roach Spray	Piperonyl butoxide. Ethofenprox. Tetramethrin. Pyrethrins
CA020006	Linex 50 DF	Linuron.
ID060002	Platinum Insecticide	Thiamethoxam.
OR050004	Subdue Maxx	D-Alanine, N-(2,6-dimethylphenyl)-N-(methoxyacetyl)-, methyl ester.
OR060002	LSP Flowable Fungicide	Thiabendazole.
OR060014	Outlook Herbicide	Dimethenamide-P.
OR060015	Platinum	Thiamethoxam.
WA090006	Nemacur 3 Emulsifiable Insecticide-Nematicide	Fenamiphos.

Table 2 of this unit includes the names and addresses of record for all registrants of the products in Table 1 of this unit, in sequence by EPA company number. This number corresponds to the first part of the EPA registration numbers of the products listed in Table 1 of this unit.

TABLE 2—REGISTRANTS OF CANCELLED PRODUCTS

EPA Co. No.	Company name and address
4	Bonide Products, Inc., Agent Registrations By Design, Inc., P.O. Box 1019, Salem, VA 24153–3805.
228	Nufarm Americas Inc., 150 Harvester Drive, Suite 200, Burr Ridge, IL 60527.
961	Lebanon Seaboard Corporation, 1600 East Cumberland St., Lebanon, PA 17042.
1022	IBC Manufacturing Co., 416 E. Brooks Rd., Memphis, TN 38109.
1448	Buckman Laboratories Inc., 1256 North McLean Blvd., Memphis, TN 38108.
1677	Ecolab Inc., 370 North Wabasha St., St. Paul, MN 55102.
2217	PBI/Gordon Corp., 1217 West 12th St., P.O. Box 014090, Kansas City, MO 64101–0090.
3008	Osmose Inc., 980 Ellicott St., Buffalo, NY 14209.
4822	S.C. Johnson & Son Inc., 1525 Howe St., Racine, WI 53403.
7364	GLB Pool & Spa (An Arch Chemicals, Inc. Business), W175 N11163 Stonewood Drive, Suite 234, Germantown, WI 53022–4799.
7969	BASF Corporation, 26 Davis Drive, P.O. Box 13528, Research Triangle Park, NC 27709–3528.
10707	Baker Petrolite Corporation, 12645 West Airport Blvd., Sugar Land, TX 77478.
19713	Drexel Chemical Company, 1700 Channel Ave., P.O. Box 13327, Memphis, TN 38113–0327.
33955	PBI/Gordon Corp., 1217 West 12th St., P.O. Box 014090, Kansas City, MO 64101–0090.

TABLE 2—REGISTRANTS OF CANCELLED PRODUCTS—Continued

EPA Co. No.	Company name and address
34704	Loveland Products, Inc., P.O. Box 1286, Greeley, Colorado 80632–1286.
51036	BASF Sparks LLC, P.O. Box 13528, Research Triangle Park, NC 27709–3528.
53883	Control Solutions, Inc., Agent Name: D. O'Shaughnessy Consulting, Inc., 427 Hide Away Circle, Cub Run, KY 42729.
62719	Dow Agrosciences LLC, 9330 Zionsville Rd 308/2E, Indianapolis, IN 46268–1054.
66330	Arysta LifeScience North America, LLC, 15401 Weston Parkway, Suite 150, Cary, NC 27513.
86203	Mitsui Chemicals Agro, Inc., P.O. Box 5126, Vadosta, GA 31603–5126.
CA020006	Pan American Seed Co., P.O. Box 506, Lompoc, CA 93438.
ID060002; OR060015; OR050004.	Syngenta Crop Protection, Inc., ATTN: Regulatory Affairs, P.O. Box 18300, Greensboro, NC 27419–8300.
OR060014	BASF Corporation, Agricultural Products, 26 Davis Drive, P.O. Box 13528, Research Triangle Park, NC 27709–3528.
OR060002	Bayer CropScience LP, 2 T.W. Alexander Drive, P.O. Box 12014, Research Triangle Park, NC 27709.
WA090006	Bayer CropScience LP, 2 T.W. Alexander Drive, P.O. Box 12014, Research Triangle Park, NC 27709.

III. Summary of Public Comments Received and Agency Response to Comments

During the public comment period provided, EPA received one comment in response to the January 19, 2011 **Federal Register** notice announcing the Agency's receipt of the requests for voluntary cancellations of products listed in Table 1 of Unit II regarding the export of cancelled pesticide products. This comment was not relevant to the request to voluntarily cancel certain pesticide registrations. For more information regarding EPA's export policies for cancelled pesticides, see FIFRA section 17.

IV. Cancellation Order

Pursuant to FIFRA section 6(f), EPA hereby approves the requested cancellations of the registrations identified in Table 1 of Unit II. Accordingly, the Agency hereby orders that the product registrations identified in Table 1 of Unit II are cancelled. The effective date of the cancellations that are the subject of this notice is August 31, 2011. Any distribution, sale, or use of existing stocks of the products identified in Table 1 of Unit II. in a manner inconsistent with any of the provisions for disposition of existing stocks set forth in Unit VI. will be a violation of FIFRA.

V. What is the Agency's authority for taking this action?

Section 6(f)(1) of FIFRA provides that a registrant of a pesticide product may at any time request that any of its pesticide registrations be cancelled or amended to terminate one or more uses. FIFRA further provides that, before acting on the request, EPA must publish a notice of receipt of any such request in the **Federal Register**. Thereafter, following the public comment period, the EPA Administrator may approve such a request. The notice of receipt for this action was published for comment in the **Federal Register** issue of January 19, 2011 (76 FR 3138) (FRL–8857–1). The comment period closed on July 14, 2011.

VI. Provisions for Disposition of Existing Stocks

Existing stocks are those stocks of registered pesticide products which are currently in the United States and which were packaged, labeled, and released for shipment prior to the effective date of the cancellation action. The existing stocks provisions for the products subject to this order are as follows.

The registrants may continue to sell and distribute existing stocks of products listed in Table 1 of Unit II. until August 30, 2012, which is 1 year after the publication of the Cancellation Order in the **Federal Register**. Thereafter, the registrants are prohibited from selling or distributing products listed in Table 1, except for export in accordance with FIFRA section 17, or proper disposal. Persons other than the registrants may sell, distribute, or use existing stocks of products listed in Table 1 of Unit II. until existing stocks are exhausted, provided that such sale, distribution, or use is consistent with the terms of the previously approved labeling on, or that accompanied, the cancelled products.

Certain requests to voluntarily cancel pesticide products announced in the January 19, 2011 6(f) Notice, (FRL–8857–1) were omitted from this cancellation order because those products were cancelled in a previously published document. The effective date of cancellation of those products was July 15, 2011 as stated in the cancellation order titled: ''Cancellation of Pesticides for Non-Payment of Year 2011 Registration Maintenance Fees.'' The cancellation order was published July 27, 2011 (76 FR 44907) (FRL–8879–8) and can be found in docket EPA–HQ–OPP–2011–0558. See EPA docket EPA–HQ–OPP–2011–0558; FRL–8879–8 for a list of those registration numbers.

List of Subjects

Environmental protection, Pesticides and pests.

Dated: August 24, 2011.

Peter Caulkins,

Acting Director, Pesticide Re-evaluation Division, Office of Pesticide Programs.

[FR Doc. 2011–22135 Filed 8–30–11; 8:45 am]

BILLING CODE 6560–50–P

FEDERAL COMMUNICATIONS COMMISSION

Information Collections Being Submitted for Review and Approval to the Office of Management and Budget

AGENCY: Federal Communications Commission.

ACTION: Notice and request for comments.

SUMMARY: The Federal Communications Commission (FCC), as part of its continuing effort to reduce paperwork burdens, invites the general public and other Federal agencies to take this opportunity to comment on the following information collection, as required by the Paperwork Reduction Act (PRA) of 1995. An agency may not conduct or sponsor a collection of information unless it displays a currently valid control number. No person shall be subject to any penalty for failing to comply with a collection of information subject to the PRA that does not display a valid control number. Comments are requested concerning (a) Whether the proposed collection of information is necessary for the proper performance of the functions of the Commission, including whether the information shall have practical utility; (b) the accuracy of the Commission's burden estimate; (c) ways to enhance the quality, utility, and clarity of the information collected; (d) ways to

minimize the burden of the collection of information on the respondents, including the use of automated collection techniques or other forms of information technology; and (e) ways to further reduce the information collection burden on small business concerns with fewer than 25 employees.

The FCC may not conduct or sponsor a collection of information unless it displays a currently valid control number. No person shall be subject to any penalty for failing to comply with a collection of information subject to the PRA that does not display a valid Office of Management and Budget (OMB) control number.

DATES: Written comments should be submitted on or before September 30, 2011. If you anticipate that you will be submitting comments, but find it difficult to do so within the period of time allowed by this notice, you should advise the contacts below as soon as possible.

ADDRESSES: Direct all PRA comments to Nicholas A. Fraser, OMB, via fax 202–395–5167, or via e-mail *Nicholas_A._Fraser@omb.eop.gov*; and to Cathy Williams, FCC, via e-mail *PRA@fcc.gov* mail to: *PRA@fcc.gov* and to *Cathy.Williams@fcc.gov*. Include in the comments the OMB control number as shown in the **SUPPLEMENTARY INFORMATION** section below.

FOR FURTHER INFORMATION CONTACT: For additional information or copies of the information collection, contact Cathy Williams at (202) 418–2918. To view a copy of this information collection request (ICR) submitted to OMB: (1) Go to the Web page *http://www.reginfo.gov/public/do/PRAMain,* (2) look for the section of the Web page called ''Currently Under Review,'' (3) click on the downward-pointing arrow in the ''Select Agency'' box below the ''Currently Under Review'' heading, (4) select ''Federal Communications Commission'' from the list of agencies presented in the ''Select Agency'' box, (5) click the ''Submit'' button to the right of the ''Select Agency'' box, (6) when the list of FCC ICRs currently under review appears, look for the OMB control number of this ICR and then click on the ICR Reference Number. A copy of the FCC submission to OMB will be displayed.

SUPPLEMENTARY INFORMATION:

OMB Control Number: 3060–0501.

Title: Section 73.1942 Candidates Rates; Section 76.206 Candidate Rates; Section 76.1611 Political Cable Rates and Classes of Time.

Type of Review: Extension of a currently approved collection.

Respondents: Business or other for-profit entities.

Number of Respondents and Responses: 18,111 respondents; 412,110 responses.

Estimated Time per Response: 0.5 hours to 20 hours.

Frequency of Response: Recordkeeping requirement; On occasion reporting requirement; Semi-annual requirement; Third party disclosure requirement.

Obligation to Respond: Required to obtain or retain benefits. The statutory authority for this collection of information is contained in Sections 154(i) and 315 of the Communications Act of 1934, as amended.

Total Annual Burden: 948,719 hours.

Total Annual Cost: None.

Privacy Act Impact Assessment: No impact(s).

Nature and Extent of Confidentiality: There is no need for confidentiality with this collection of information.

Needs and Uses: Section 315 of the Communications Act directs broadcast stations and cable operators to charge political candidates the ''lowest unit charge of the station'' for the same class and amount of time for the same period, during the 45 days preceding a primary or runoff election and the 60 days preceding a general or special election.

47 CFR 73.1942 requires broadcast licensees and 47 CFR 76.206 requires cable television systems to disclose any station practices offered to commercial advertisers that enhance the value of advertising spots and different classes of time (immediately preemptible, preemptible with notice, fixed, fire sale, and make good). These rule sections also require licensees and cable TV systems to calculate the lowest unit charge. Broadcast stations and cable systems are also required to review their advertising records throughout the election period to determine whether compliance with these rule sections require that candidates receive rebates or credits.

47 CFR 76.1611 requires cable systems to disclose to candidates information about rates, terms, conditions and all value-enhancing discount privileges offered to commercial advertisers.

OMB Approval Number: 3060–0896.

Title: Broadcast Auction Form Exhibits.

Form Number: N/A.

Type of Review: Extension of a currently approved collection.

Respondents: Business or other-for profit entities, not-for-profit institutions, State, local or tribal government.

Number of Respondents and Responses: 3,000 respondents and 7,605 responses.

Estimated Hours per Response: 0.5 hours–2 hours.

Obligation to Respond: On occasion reporting requirement. The statutory authority for this collection of information is contained in Sections 154(i) and 309 of the Communications Act of 1934, as amended.

Annual Hour Burden: 8,628 hours.

Annual Cost Burden: $16,735,750.

Nature and Extent of Confidentiality: There is no need for confidentiality with this collection of information.

Privacy Impact Assessment(s): No impact(s).

Needs and Uses: The Commission's rules require that broadcast auction participants submit exhibits disclosing ownership, bidding agreements, bidding credit eligibility and engineering data. These data are used by Commission staff to ensure that applicants are qualified to participate in Commission auctions and to ensure that license winners are entitled to receive the new entrant bidding credit, if applicable. Exhibits regarding joint bidding agreements are designed to prevent collusion. Submission of engineering exhibits for non-table services enables the Commission to determine which applications are mutually exclusive.

Federal Communications Commission.

Marlene H. Dortch,

Secretary, Office of the Secretary, Office of Managing Director.

[FR Doc. 2011–22216 Filed 8–30–11; 8:45 am]

BILLING CODE 6712–01–P

FEDERAL COMMUNICATIONS COMMISSION

Public Safety and Homeland Security Bureau; Federal Advisory Committee Act; Communications Security, Reliability, and Interoperability Council

AGENCY: Federal Communications Commission.

ACTION: Notice of public meeting.

SUMMARY: In accordance with the Federal Advisory Committee Act, this notice advises interested persons that the Federal Communications Commission's (FCC) third Communications Security, Reliability, and Interoperability Council (CSRIC III) will hold its first meeting on September 23, 2011, from 9 a.m. to 1 p.m. in the Commission Meeting Room of the Federal Communications Commission, Room TW–C305, 445 12th Street, SW., Washington, DC 20554.

DATES: September 23, 2011.

ADDRESSES: Federal Communications Commission, Room TW–C305

(Commission Meeting Room), 445 12th Street, SW., Washington, DC 20554.

FOR FURTHER INFORMATION CONTACT: Jeffery Goldthorp, Designated Federal Officer of the FCC's CSRIC, (202) 418–1096 (voice) or *jeffery.goldthorp@fcc.gov* (e-mail); or Lauren Kravetz, Deputy Designated Federal Officer of the FCC's CSRIC, (202) 418–7944 (voice) or *lauren.kravetz@fcc.gov* (e-mail).

SUPPLEMENTARY INFORMATION: The CSRIC is a Federal Advisory Committee that will provide recommendations to the FCC regarding best practices and actions the FCC can take to ensure the security, reliability, and interoperability of communications systems. On March 19, 2011, the FCC, pursuant to the Federal Advisory Committee Act, renewed the charter for the CSRIC for a period of two years through March 18, 2013.

At this first meeting, the chairs of each CSRIC working group will present a plan for completion of each working group's tasks. A presentation will also be made by the Alliance for Telecommunications Industry Solutions on recent work to improve 9–1–1 reliability. The FCC will attempt to accommodate as many people as possible; however, admittance will be limited to seating availability. The Commission will provide audio and/or video coverage of the meeting over the Internet from the FCC's Web page at *http://www.fcc.gov/live.* The public may submit written comments before the meeting to Jeffery Goldthorp, the FCC's Designated Federal Officer for the CSRIC by e-mail to *jeffery.goldthorp@fcc.gov* or U.S. Postal Service Mail to Jeffery Goldthorp, Associate Bureau Chief, Public Safety and Homeland Security Bureau, Federal Communications Commission, 445 12th Street, SW., Room 7–A325, Washington, DC 20554.

Open captioning will be provided for this event. Other reasonable accommodations for people with disabilities are available upon request. Requests for such accommodations should be submitted via e-mail to *fcc504@fcc.gov* or by calling the Consumer & Governmental Affairs Bureau at (202) 418–0530 (voice), (202) 418–0432 (tty). Such requests should include a detailed description of the accommodation needed. In addition, please include a way the FCC can contact you if it needs more information. Please allow at least five days' advance notice; last minute requests will be accepted, but may be impossible to fill. Additional information regarding the CSRIC can be found at: *http://www.fcc.gov/pshs/advisory/csric/.*

Federal Communications Commission.

Marlene H. Dortch,

Secretary.

[FR Doc. 2011–22201 Filed 8–30–11; 8:45 am]

BILLING CODE 6712–01–P

FEDERAL ELECTION COMMISSION

Sunshine Act Notice

AGENCY: Federal Election Commission.

DATE AND TIME: Wednesday, August 31, 2011, at 10 a.m.

PLACE: 999 E Street, NW., Washington, DC (Ninth Floor).

STATUS: This hearing will be open to the public.

ITEM TO BE DISCUSSED: Chris Dodd for President, Inc.

Individuals who plan to attend and require special assistance, such as sign language interpretation or other reasonable accommodations, should contact Shawn Woodhead Werth, Commission Secretary and Clerk, at (202) 694–1040, at least 72 hours prior to the hearing date.

PERSON TO CONTACT FOR INFORMATION: Judith Ingram, Press Officer, Telephone: (202) 694–1220.

Shawn Woodhead Werth,

Secretary and Clerk of the Commission.

[FR Doc. 2011–22365 Filed 8–29–11; 11:15 am]

BILLING CODE 6715–01–P

FEDERAL MARITIME COMMISSION

Notice of Agreement Filed

The Commission hereby gives notice of the filing of the following agreement under the Shipping Act of 1984. Interested parties may submit comments on the agreement to the Secretary, Federal Maritime Commission, Washington, DC 20573, within ten days of the date this notice appears in the **Federal Register**. A copy of the agreement is available through the Commission's Web site (*http://www.fmc.gov*) or by contacting the Office of Agreements at (202)–523–5793 or *tradeanalysis@fmc.gov.*

Agreement No.: 012070–003.

Title: CSCL/ELJSA Vessel Sharing Agreement—Asia and Mexico, US East Coast Service.

Parties: China Shipping Container Lines Co., Ltd.; China Shipping Container Lines (Hong Kong) Co., Ltd.; Evergreen Lines Joint Service Agreement; and United Arab Shipping Company S.A.G.

Filing Party: Tara L. Leiter, Esq.; Blank Rome, LLP; Watergate; 600 New Hampshire Avenue, NW.; Washington, DC 20037.

Synopsis: The amendment revises the parties' vessel contributions and space allocations under the agreement.

Dated: August 26, 2011.

By Order of the Federal Maritime Commission.

Karen V. Gregory,

Secretary.

[FR Doc. 2011–22322 Filed 8–30–11; 8:45 am]

BILLING CODE 6730–01–P

DEPARTMENT OF HEALTH AND HUMAN SERVICES

[CFDA#: 93.360]

Supplement to the FY2010 Single-Source Cooperative Agreement With the World Health Organization (WHO)

AGENCY: Biomedical Advanced Research Development Authority (BARDA), Office of the Assistant Secretary for Preparedness and Response (ASPR), Department of Health and Human Services (HHS).

ACTION: Notice.

SUMMARY: In FY 2011, HHS/ASPR/BARDA plans to supplement the FY2010 ''Single-Source Cooperative Agreement with the World Health Organization (WHO) to Continue Development of Sustainable Influenza Vaccine Production Capacity in Under Resourced Nations''. BARDA currently funds the development of vaccine manufacturing capacity in ten developing and emerging-economy countries worldwide via a cooperative agreement with the World Health Organization (WHO). The amount of Single Source Award is $6,021,535. The project period is September 1, 2011, through August 31, 2012.

SUPPLEMENTARY INFORMATION: The WHO has proven to be a key partner and integral to the success of the program, which has been in existence since 2006. Continuing the partnership with the WHO will prove critical to the long-term viability of this program while bolstering the influenza vaccine manufacturing capabilities of resource-poor nations and global pandemic preparedness overall.

Single Source Justification: The International Vaccine Capacity Building Program, supported by the Department of Health and Human Services, Office of the Assistant Secretary for Preparedness and Response, Biomedical Advanced Research and Development Authority was developed and has been operational

since 2006. In light of the threat of an influenza pandemic it was originally designed with the goals of bolstering both international and domestic pandemic preparedness and response. The fundamental approach in achieving these goals has been through the development of the influenza vaccine production capabilities of under resourced nations in the hopes that they will ultimately be able to produce vaccines to protect the local, regional, and international public health. The program is supported by a collaborative of U.S. Government agencies, international organizations, foreign ministries and/or other foreign institutions dedicated to achieving these goals.

The WHO is the only global organization with the experience and scientific standing to accomplish the program goals. It is the recognized world health authority within the United Nations system. Similarly, the liaison and support functions that the WHO plays within the international vaccine production capacity building program cannot be duplicated or replicated. Through standing consultation and dialog with its members states on all aspects of public health, WHO is the only partner able to ensure synchronization of building of production capacity in developing countries for influenza vaccine with other pandemic preparedness activities and with increase of demand for seasonal influenza immunization.

The WHO's strong collaborative relationships with foreign governments, programmatic support, and familiarity with international vaccine production institutions have been and will be critical to the future viability of this program. Over the history of the International Vaccine Production Capacity Building program, the WHO has provided unique and invaluable support to the project. Similarly, the WHO has also independently funded other nations/institutions working to strengthen their influenza vaccine production capacity; also demonstrating their commitment to the success of this program. The WHO represents a key stakeholder in the implementation of the program; providing unique functions, technical and scientific expertise, and capabilities that no other organization in the world has.

Additional Information: The agency program contact is Dr. Rick Bright, whom can be contacted at (202) 260–8535 or *Rick.Bright@hhs.gov.*

Statutory Authority: Section 319L of the Public Health Service (PHS) Act, 42 U.S.C. 247d–7e as amended by Title IV of the Pandemic and All-Hazards Preparedness Act (PAHPA), Pub. L. 109–417; and the Consolidated Appropriations Act, 2010, Pub. L. 111–117.

Dated: August 25, 2011.

Nicole Lurie,

Assistant Secretary for Preparedness and Response, U.S. Department of Health and Human Services.

[FR Doc. 2011–22214 Filed 8–30–11; 8:45 am]

BILLING CODE 4150–37–P

DEPARTMENT OF HEALTH AND HUMAN SERVICES

Health Resources and Services Administration

Statement of Organization, Functions and Delegations of Authority

This notice amends part R of the Statement of Organization, Functions and Delegations of Authority of the Department of Health and Human Services (HHS), Health Resources and Services Administration (HRSA) (60 FR 56605, as amended November 6, 1995; as last amended at 76 FR 45584–45585 dated July 29, 2011).

This notice reflects organizational changes to the Health Resources and Services Administration. Specifically, this notice updates the Office of Planning, Analysis and Evaluation (RA5) functional statement. The update to the functional statement will better align functional responsibility with improved management and administrative efficiencies and improved alignment of current liaison functions and policy processes within the Office of Planning, Analysis and Evaluation (RA5).

Chapter RA5—Office of Planning, Analysis and Evaluation

Section RA5–10, Organization

Delete in its entirety and replace with the following:

The Office of Policy, Analysis and Evaluation (RA5) is headed by the Director, who reports directly to the Administrator, Health Resources and Services Administration. The Office of Planning, Analysis and Evaluation (RA5) includes the following components:

(1) Office of the Director (RA5);

(2) Office of Policy Analysis (RA53); and

(3) Office of Research and Evaluation (RA56).

Section RA5–20, Functions

(1) Delete the functional statement for the Office of Planning, Analysis and Evaluation (RA5) and replace in its entirety.

Office of the Director (RA5)

(1) Provides Agency-wide leadership for policy development, data collection and management, major analytic activities, research, and evaluation; (2) develops HRSA-wide policies; (3) participates with HRSA organizations in developing strategic plans for their component; (4) coordinates the Agency's long-term strategic planning process; (5) conducts and/or guides analyses, research, and program evaluation; (6) develops annual performance plans; (7) analyzes budgetary data with regard to planning guidelines; (8) develops and produces performance reports required under the Government Performance and Accountability Report and OMB; (9) as requested, develops, implements, and coordinates policy processes for the Agency for key major cross-cutting policy issues; (10) facilitates policy development by maintaining analytic liaison between the Administrator, other OPDIVs, Office of the Secretary staff components, and other Departments on critical matters involving program policy undertaken in the Agency; (11) provides data analyses, graphic presentations, briefing materials, and analyses on short notice to support the immediate needs of the Administrator and Senior Leadership; (12) conducts special studies and analyses and/or provides analytic support and information to the Administrator and Senior Leadership needed to support the Agency's goals and directions; and (13) collaborates with the Office of Operations in the development of budgets, performance plans, and other administration reporting requirements.

Office of Policy Analysis (RA53)

(1) Serves as the principal Agency resource for policy analysis; (2) analyzes issues arising from legislation, budget proposals, regulatory actions, and other program or policy actions; (3) serves as focal point within HRSA for analysis of healthcare payment systems and financing issues; (4) collaborates with HHS Agencies to examine the impact of Medicare, Medicaid, and Children's Health Insurance Program (CHIP) on HRSA grantees and safety net providers; (5) provides Agency leadership guidance on policy development; (6) serves as a resource of information and institutional knowledge for the Agency; (7) coordinates the Agency's participation in Healthy People, and other Department and Federal initiatives; (8) coordinates the Agency's intergovernmental activities, including: providing the Administrator with a single point of contact on all activities

related to important state and local government, stakeholder association, and interest group activities; coordinating Agency cross-Bureau cooperative agreements and activities with organizations such as the National Governors Association, National Conference of State Legislature, Association of State and Territorial Health Officials, National Association of Counties, and National Association of County and City Health Officials; interacting with various commissions such as the Delta Regional Authority, Appalachian Regional Commission, and on the Denali Commission; and serving as the primary liaison to Department intergovernmental staff; and (9) serves as the coordinator for General Accounting Office reports on HRSA programs and activities.

Office of Research and Evaluation (RA56)

(1) Serves as the principal source of leadership and advice on program information and research; (2) analyzes and coordinates the Agency's need for information and data for use in the management and direction of Agency programs; (3) manages an Agency-wide information and data group as well as an Agency-wide research group; (4) maintains an inventory of HRSA databases; (5) provides technical assistance to HRSA staff in database development, maintenance, analysis, and distribution; (6) promotes the availability of HRSA data through Web sites and other online applications; (7) conducts, oversees, and fosters high quality research across HRSA programmatic interests; (8) develops an annual research agenda for the Agency; (9) conducts, leads, and/or participates with HRSA staff in the development of research and demonstration projects; (10) coordinates HRSA participation in institutional review boards and the protection of human subjects; (11) conducts, guides, and/or participates in major program evaluation efforts and prepares reports on HRSA program efficiencies; and (12) manages HRSA activity related to the Paperwork Reduction Act, and other OMB policies.

Section RA5–30, Delegations of Authority

All delegations of authority and re-delegations of authority made to HRSA officials that were in effect immediately prior to this reorganization, and that are consistent with this reorganization, shall continue in effect pending further re-delegation.

This reorganization is effective upon date of signature.

Dated: August 19, 2011.

Mary K. Wakefield,

Administrator.

[FR Doc. 2011–22261 Filed 8–30–11; 8:45 am]

BILLING CODE 4165–15–P

DEPARTMENT OF HEALTH AND HUMAN SERVICES

National Institutes of Health

National Institute of Diabetes and Digestive and Kidney Diseases; Notice of Closed Meeting

Pursuant to section 10(d) of the Federal Advisory Committee Act, as amended (5 U.S.C. App.), notice is hereby given of a meeting of the Board of Scientific Counselors, NIDDK.

The meeting will be closed to the public as indicated below in accordance with the provisions set forth in section 552b(c)(6), Title 5 U.S.C., as amended for the review, discussion, and evaluation of individual intramural programs and projects conducted by the National Institute of Diabetes and Digestive and Kidney Diseases, including consideration of personnel qualifications and performance, and the competence of individual investigators, the disclosure of which would constitute a clearly unwarranted invasion of personal privacy.

Name of Committee: Board of Scientific Counselors, NIDDK.

Date: October 13–14, 2011.

Time: October 13, 2011, 8:30 a.m. to 3:05 p.m.

Agenda: To review and evaluate personal qualifications and performance, and competence of individual investigators.

Place: National Institutes of Health, Building 10, 10 Center Drive, Conference Room 2C116, Bethesda, MD 20892.

Time: October 14, 2011, 8:30 a.m. to 2:40 p.m.

Agenda: To review and evaluate personal qualifications and performance, and competence of individual investigators.

Place: National Institutes of Health, Building 10, 10 Center Drive, Conference Room 2C116, Bethesda, MD 20892.

Contact Person: James E. Balow, MD, Clinical Director, National Institute of Diabetes and Digestive and Kidney Diseases, National Institutes of Health, Building 10, Room 9N222, Bethesda, MD 20892–1818, 301–496–4181, *jimb@mail.nih.gov.*

Any interested person may file written comments with the committee by forwarding the statement to the Contact Person listed on this notice. The statement should include the name, address, telephone number and when applicable, the business or professional affiliation of the interested person.

In the interest of security, NIH has instituted stringent procedures for entrance onto the NIH campus. All visitor vehicles, including taxicabs, hotel, and airport shuttles will be inspected before being allowed on campus. Visitors will be asked to show one form of identification (for example, a government-issued photo ID, driver's license, or passport) and to state the purpose of their visit.

(Catalogue of Federal Domestic Assistance Program Nos. 93.847, Diabetes, Endocrinology and Metabolic Research; 93.848, Digestive Diseases and Nutrition Research; 93.849, Kidney Diseases, Urology and Hematology Research, National Institutes of Health, HHS)

Dated: August 23, 2011.

Jennifer S. Spaeth,

Director, Office of Federal Advisory Committee Policy.

[FR Doc. 2011–22213 Filed 8–30–11; 8:45 am]

BILLING CODE 4140–01–P

DEPARTMENT OF HEALTH AND HUMAN SERVICES

National Institutes of Health

National Center for Research Resources; Notice of Closed Meetings

Pursuant to section 10(d) of the Federal Advisory Committee Act, as amended (5 U.S.C. App.), notice is hereby given of the following meetings.

The meetings will be closed to the public in accordance with the provisions set forth in sections 552b(c)(4) and 552b(c)(6), Title 5 U.S.C., as amended. The grant applications and the discussions could disclose confidential trade secrets or commercial property such as patentable material, and personal information concerning individuals associated with the grant applications, the disclosure of which would constitute a clearly unwarranted invasion of personal privacy.

Name of Committee: National Center for Research Resources Special Emphasis Panel, SPF Colonies.

Date: September 22, 2011.

Time: 2 p.m. to 5 p.m.

Agenda: To review and evaluate grant applications.

Place: National Institutes of Health, 6701 Democracy Blvd., Bethesda, MD 20892.

Contact Person: Carol Lambert, PhD, Scientific Review Officer, Office of Review, National Center for Research Resources, National Institutes of Health, 6701 Democracy Blvd., Dem. 1, Room 1076, Bethesda, MD 20892, 301–435–0814, *lambert@mail.nih.gov.*

Name of Committee: National Center for Research Resources Special Emphasis Panel.

Date: October 25, 2011.

Time: 8 a.m. to 6 p.m.

Agenda: To review and evaluate grant applications.

Place: Doubletree Hotel Bethesda, (Formerly Holiday Inn Select), 8120 Wisconsin Avenue, Bethesda, MD 20814.

Contact Person: Lisa A. Newman, SCD, Scientific Review Officer, National Institutes

of Health, National Center for Research Resources, Office of Review, Room 1074, 6701 Democracy Blvd. MSC 4874, Bethesda, MD 20892, 301–435–0965, *newmanla2@mail.nih.gov*.

(Catalogue of Federal Domestic Assistance Program Nos. 93.306, Comparative Medicine; 93.333, Clinical Research; 93.371, Biomedical Technology; 93.389, Research Infrastructure, 93.306, 93.333; 93.702, ARRA Related Construction Awards, National Institutes of Health, HHS)

Dated: August 25, 2011.

Jennifer S. Spaeth,

Director, Office of Federal Advisory Committee Policy.

[FR Doc. 2011–22301 Filed 8–30–11; 8:45 am]

BILLING CODE 4140–01–P

DEPARTMENT OF HEALTH AND HUMAN SERVICES

National Institutes of Health

National Center for Research Resources; Amended Notice of Meeting

Notice is hereby given of a change in the meeting of the Comparative Medicine Review Committee, October 20, 2011, 8 a.m. to October 20, 2011, 5 p.m., Hilton Rockville, 1750 Rockville Pike, Rockville, MD 20852 which was published in the **Federal Register** on August 19, 2011, 76FR 51995.

The committee meeting has been changed to a one day meeting on September 20, 2011 only. The meeting is closed to the public.

Dated: August 25, 2011.

Jennifer S. Spaeth,

Director, Office of Federal Advisory Committee Policy.

[FR Doc. 2011–22300 Filed 8–30–11; 8:45 am]

BILLING CODE 4140–01–P

DEPARTMENT OF HEALTH AND HUMAN SERVICES

National Institutes of Health

National Institute on Aging; Notice of Closed Meetings

Pursuant to section 10(d) of the Federal Advisory Committee Act, as amended (5 U.S.C. App.), notice is hereby given of the following meetings.

The meetings will be closed to the public in accordance with the provisions set forth in sections 552b(c)(4) and 552b(c)(6), Title 5 U.S.C., as amended. The grant applications and the discussions could disclose confidential trade secrets or commercial property such as patentable material, and personal information concerning individuals associated with the grant applications, the disclosure of which would constitute a clearly unwarranted invasion of personal privacy.

Name of Committee: National Institute on Aging Special Emphasis Panel, Work Levels, Disease, and Death.

Date: October 3, 2011.

Time: 2 p.m. to 4 p.m.

Agenda: To review and evaluate grant applications.

Place: National Institute on Aging, Gateway Building, 7201 Wisconsin Avenue, Suite 2C212, Bethesda, MD 20892 (Telephone Conference Call).

Contact Person: Rebecca J. Ferrell, PhD, Scientific Review Officer, National Institute on Aging, Gateway Building Rm. 2C212, 7201 Wisconsin Avenue, Bethesda, MD 20892, 301–402–7703, *ferrellrj@mail.nih.gov.*

Name of Committee: National Institute on Aging Special Emphasis Panel, Aging and Compensatory Immune Mechanisms.

Date: October 17, 2011.

Time: 12:45 p.m. to 4:45 p.m.

Agenda: To review and evaluate grant applications.

Place: National Institute on Aging, Gateway Building, 7201 Wisconsin Avenue, Suite 2C212, Bethesda, MD 20892 (Telephone Conference Call).

Contact Person: Rebecca J. Ferrell, PhD, Scientific Review Officer, National Institute on Aging, Gateway Building Rm. 2C212, 7201 Wisconsin Avenue, Bethesda, MD 20892, 301–402–7703, *ferrellrj@mail.nih.gov.*

(Catalogue of Federal Domestic Assistance Program Nos. 93.866, Aging Research, National Institutes of Health, HHS)

Dated: August 25, 2011.

Jennifer S. Spaeth,

Director, Office of Federal Advisory Committee Policy.

[FR Doc. 2011–22299 Filed 8–30–11; 8:45 am]

BILLING CODE 4140–01–P

DEPARTMENT OF HEALTH AND HUMAN SERVICES

National Institutes of Health

Center for Scientific Review; Notice of Closed Meeting

Pursuant to section 10(d) of the Federal Advisory Committee Act, as amended (5 U.S.C. App.), notice is hereby given of the following meeting.

The meeting will be closed to the public in accordance with the provisions set forth in sections 552b(c)(4) and 552b(c)(6), Title 5 U.S.C., as amended. The grant applications and the discussions could disclose confidential trade secrets or commercial property such as patentable material, and personal information concerning individuals associated with the grant applications, the disclosure of which would constitute a clearly unwarranted invasion of personal privacy.

Name of Committee: Center for Scientific Review Special Emphasis Panel, Member Conflict: Language, Communication, Cognition and Perception.

Date: September 13–14, 2011.

Time: 10 a.m. to 8 p.m.

Agenda: To review and evaluate grant applications.

Place: National Institutes of Health, 6701 Rockledge Drive, Bethesda, MD 20892 (Virtual Meeting).

Contact Person: Jane A Doussard-Roosevelt, PhD, Scientific Review Officer, Center for Scientific Review, National Institutes of Health, 6701 Rockledge Drive, Room 3184, MSC 7848, Bethesda, MD 20892, (301) 435–4445, *doussarj@csr.nih.gov*.

This notice is being published less than 15 days prior to the meeting due to the timing limitations imposed by the review and funding cycle.

(Catalogue of Federal Domestic Assistance Program Nos. 93.306, Comparative Medicine; 93.333, Clinical Research, 93.306, 93.333, 93.337, 93.393–93.396, 93.837–93.844, 93.846–93.878, 93.892, 93.893, National Institutes of Health, HHS)

Dated: August 25, 2011.

Jennifer S. Spaeth,

Director, Office of Federal Advisory Committee Policy.

[FR Doc. 2011–22298 Filed 8–30–11; 8:45 am]

BILLING CODE 4140–01–P

DEPARTMENT OF HEALTH AND HUMAN SERVICES

National Institutes of Health

Center for Scientific Review; Notice of Closed Meetings

Pursuant to section 10(d) of the Federal Advisory Committee Act, as amended (5 U.S.C. App.), notice is hereby given of the following meetings.

The meetings will be closed to the public in accordance with the provisions set forth in sections 552b(c)(4) and 552b(c)(6), Title 5 U.S.C., as amended. The grant applications and the discussions could disclose confidential trade secrets or commercial property such as patentable material, and personal information concerning individuals associated with the grant applications, the disclosure of which would constitute a clearly unwarranted invasion of personal privacy.

Name of Committee: Center for Scientific Review Special Emphasis Panel, Member Conflict: Epidemiology.

Date: September 22–23, 2011.

Time: 8:30 a.m. to 4 p.m.

Agenda: To review and evaluate grant applications.

Place: National Institutes of Health, 6701 Rockledge Drive, Bethesda, MD 20892 (Virtual Meeting).

Contact Person: J Scott Osborne, PhD, Scientific Review Officer, Center for

Scientific Review, National Institutes of Health, 6701 Rockledge Drive, Room 4114, MSC 7816, Bethesda, MD 20892, (301) 435–1782, *osbornes@csr.nih.gov*.

Name of Committee: Oncology 2—Translational Clinical Integrated Review Group, Clinical Oncology Study Section.
Date: October 3–4, 2011.
Time: 8 a.m. to 5 p.m.
Agenda: To review and evaluate grant applications.
Place: Hilton Long Beach, 701 West Ocean Boulevard, Long Beach, CA 90831.
Contact Person: Malaya Chatterjee, PhD, Scientific Review Officer, Center for Scientific Review, National Institutes of Health, 6701 Rockledge Drive, Room 6192, MSC 7804, Bethesda, MD 20892, 301–806–2515, *chatterm@csr.nih.gov*.

Name of Committee: Molecular, Cellular and Developmental Neuroscience Integrated Review Group, Molecular Neuropharmacology and Signaling Study Section.
Date: October 3, 2011.
Time: 8 a.m. to 7:30 p.m.
Agenda: To review and evaluate grant applications.
Place: Hotel Monaco, 700 F Street, NW., Washington, DC 20001.
Contact Person: Deborah L. Lewis, PhD, Scientific Review Officer, Center for Scientific Review, National Institutes of Health, 6701 Rockledge Drive, Room 4183, MSC 7850, Bethesda, MD 20892, 301–408–9129, *lewisdeb@csr.nih.gov*.

Name of Committee: Population Sciences and Epidemiology Integrated Review Group, Neurological, Aging and Musculoskeletal Epidemiology Study Section.
Date: October 4, 2011.
Time: 8:30 a.m. to 6 p.m.
Agenda: To review and evaluate grant applications.
Place: Doubletree Hotel Washington, 1515 Rhode Island Ave, NW., Washington, DC 20005.
Contact Person: Heidi B. Friedman, PhD, Scientific Review Officer, Center for Scientific Review, National Institutes of Health, 6701 Rockledge Drive, Room 1012A, MSC 7770, Bethesda, MD 20892, 301–435–1721, *hfriedman@csr.nih.gov*.

Name of Committee: Endocrinology, Metabolism, Nutrition and Reproductive Sciences Integrated Review Group, Molecular and Cellular Endocrinology Study Section.
Date: October 5, 2011.
Time: 8 a.m. to 5 p.m.
Agenda: To review and evaluate grant applications.
Place: Doubletree Guest Suites Santa Monica, 1707 Fourth Street, Santa Monica, CA 90401.
Contact Person: John Bleasdale, PhD, Scientific Review Officer, Center for Scientific Review, National Institutes of Health, 6701 Rockledge Drive, Room 6170 MSC 7892, Bethesda, MD 20892, 301–435–4514, *bleasdaleje@csr.nih.gov*.

Name of Committee: Molecular, Cellular and Developmental Neuroscience Integrated Review Group, Neurogenesis and Cell Fate Study Section.
Date: October 5, 2011.
Time: 8 a.m. to 7 p.m.
Agenda: To review and evaluate grant applications.
Place: Savoy Suites Hotel, 2505 Wisconsin Ave NW., Washington, DC 20007.
Contact Person: Joanne T. Fujii, PhD, Scientific Review Officer, Center for Scientific Review, National Institutes of Health, 6701 Rockledge Drive, Room 4184, MSC 7850, Bethesda, MD 20892, (301) 435–1178, *fujiij@csr.nih.gov*.

Name of Committee: Integrative, Functional and Cognitive Neuroscience Integrated Review Group, Neuroendocrinology, Neuroimmunology, Rhythms and Sleep Study Section.
Date: October 5–6, 2011.
Time: 8 a.m. to 5 p.m.
Agenda: To review and evaluate grant applications.
Place: Warwick Seattle Hotel, 401 Lenora Street, Seattle, WA 98121.
Contact Person: Michael Selmanoff, PhD, Scientific Review Officer, Center for Scientific Review, National Institutes of Health, 6701 Rockledge Drive, Room 5164, MSC 7844, Bethesda, MD 20892, 301–435–1119, *mselmanoff@csr.nih.gov*.

Name of Committee: Integrative, Functional and Cognitive Neuroscience Integrated Review Group, Neurobiology of Learning and Memory Study Section,
Date: October 5, 2011.
Time: 8 a.m. to 7 p.m.
Agenda: To review and evaluate grant applications.
Place: One Washington Circle Hotel, One Washington Circle, NW., Washington, DC 20037.
Contact Person: Wei-Qin Zhao, PhD, Scientific Review Officer, Center for Scientific Review, National Institutes of Health, 6701 Rockledge Drive Room 5181 MSC 7846, Bethesda, MD 20892–7846, 301–435–1236, *zhaow@csr.nih.gov*.

Name of Committee: Cell Biology Integrated Review Group, Intercellular Interactions Study Section.
Date: October 5–6, 2011.
Time: 8 a.m. to 5:30 p.m.
Agenda: To review and evaluate grant applications.
Place: Hotel Palomar, 2121 P Street, NW., Washington, DC 20037.
Contact Person: Wallace Ip, PhD, Scientific Review Officer, Center for Scientific Review, National Institutes of Health, 6701 Rockledge Drive, Room 5128, MSC 7840, Bethesda, MD 20892, 301–435–1191, *ipws@mail.nih.gov*.

Name of Committee: Digestive, Kidney and Urological Systems Integrated Review Group, Xenobiotic and Nutrient Disposition and Action Study Section.
Date: October 5, 2011.
Time: 8 a.m. to 6 p.m.
Agenda: To review and evaluate grant applications.
Place: Hyatt Regency Bethesda, 1 Bethesda Metro Center, Bethesda, MD 20814.
Contact Person: Patricia Greenwel, PhD, Scientific Review Officer, Center for Scientific Review, National Institutes of Health, 6701 Rockledge Drive, Room 2172, MSC 7818, Bethesda, MD 20892, 301–435–1169, *greenwep@csr.nih.gov*.

Name of Committee: Cardiovascular and Respiratory Sciences Integrated Review Group, Respiratory Integrative Biology and Translational Research Study Section.
Date: October 5, 2011.
Time: 8:30 a.m. to 9 p.m.
Agenda: To review and evaluate grant applications.
Place: Doubletree Hotel Bethesda, (Formerly Holiday Inn Select) 8120 Wisconsin Avenue, Bethesda, MD 20814.
Contact Person: Everett E. Sinnett, PhD, Scientific Review Officer, Center for Scientific Review, National Institutes of Health, 6701 Rockledge Drive, Room 2178, MSC 7818, Bethesda, MD 20892, (301) 435–1016, *sinnett@nih.gov*.

(Catalogue of Federal Domestic Assistance Program Nos. 93.306, Comparative Medicine; 93.333, Clinical Research, 93.306, 93.333, 93.337, 93.393–93.396, 93.837–93.844, 93.846–93.878, 93.892, 93.893, National Institutes of Health, HHS)

Dated: August 24, 2011.

Jennifer S. Spaeth,

Director, Office of Federal Advisory Committee Policy.

[FR Doc. 2011–22297 Filed 8–30–11; 8:45 am]

BILLING CODE 4140–01–P

DEPARTMENT OF HEALTH AND HUMAN SERVICES

National Institutes of Health

National Center for Research Resources Notice of Closed Meeting

Pursuant to section 10(d) of the Federal Advisory Committee Act, as amended (5 U.S.C. App.), notice is hereby given of the following meeting.

The meeting will be closed to the public in accordance with the provisions set forth in sections 552b(c)(4) and 552b(c)(6), Title 5 U.S.C., as amended. The grant applications and the discussions could disclose confidential trade secrets or commercial property such as patentable material, and personal information concerning individuals associated with the grant applications, the disclosure of which would constitute a clearly unwarranted invasion of personal privacy.

Name of Committee: National Center for Research Resources Special Emphasis Panel; CTSA Renewal.
Date: October 12–13, 2011.
Time: 8 a.m. to 5 p.m.
Agenda: To review and evaluate grant applications.
Place: Hilton Rockville, 1750 Rockville Pike, Rockville, MD 20852.
Contact Person: Mohan Viswanathan, PhD, Deputy Director, Office of Review, National Center for Research Resources, National Institutes of Health, 6701 Democracy Blvd., Dem. 1, Room 1084, MSC 4874, Bethesda, MD 20892–4874, 301–435–0829, *mv10f@nih.gov*.

(Catalogue of Federal Domestic Assistance Program Nos. 93.306, Comparative Medicine; 93.333, Clinical Research; 93.371, Biomedical Technology; 93.389, Research Infrastructure, 93.306, 93.333; 93.702, ARRA Related Construction Awards, National Institutes of Health, HHS)

Dated: August 23, 2011.

Jennifer S. Spaeth,

Director, Office of Federal Advisory Committee Policy.

[FR Doc. 2011–22211 Filed 8–30–11; 8:45 am]

BILLING CODE 4140–01–P

DEPARTMENT OF HEALTH AND HUMAN SERVICES

National Institutes of Health

National Institute of Allergy and Infectious Diseases; Notice of Closed Meetings

Pursuant to section 10(d) of the Federal Advisory Committee Act, as amended (5 U.S.C. App.), notice is hereby given of the following meetings.

The meetings will be closed to the public in accordance with the provisions set forth in sections 552b(c)(4) and 552b(c)(6), Title 5 U.S.C., as amended. The grant applications and the discussions could disclose confidential trade secrets or commercial property such as patentable material, and personal information concerning individuals associated with the grant applications, the disclosure of which would constitute a clearly unwarranted invasion of personal privacy.

Name of Committee: National Institute of Allergy and Infectious Diseases Special Emphasis Panel, Centers for AIDS Research and Developmental Centers for AIDS Research (P30).

Date: September 21–23, 2011.

Time: 8 a.m. to 5 p.m.

Agenda: To review and evaluate grant applications.

Place: Hyatt Regency Bethesda, One Bethesda Metro Center, 7400 Wisconsin Avenue, Bethesda, MD 20814.

Contact Person: Raymond R. Schleef, PhD, Scientific Review Officer, Scientific Review Program, Division of Extramural Activities, National Institutes of Health/NIAID, 6700B Rockledge Drive, MSC 7616, Bethesda, MD 20892–7616, (301) 451–3679, *schleefrr@niaid.nih.gov.*

Name of Committee: National Institute of Allergy and Infectious Diseases Special Emphasis Panel, Partnerships for Biodefense (R01).

Date: September 26, 2011.

Time: 11 a.m. to 5 p.m.

Agenda: To review and evaluate grant applications.

Place: National Institutes of Health, 6700B Rockledge Drive, Bethesda, MD 20817 (Telephone Conference Call).

Contact Person: Robert G. Keefe, PhD, Scientific Review Officer, Scientific Review Program, DEA/NIAID/NIH/DHHS, Room 3256, 6700B Rockledge Drive, MSC–7616, Bethesda, MD 20892–7616, 301–402–8399, *keefero@niaid.nih.gov.*

Name of Committee: National Institute of Allergy and Infectious Diseases Special Emphasis Panel, Partnerships for Biodefense (R01).

Date: September 27, 2011.

Time: 11 a.m. to 5 p.m.

Agenda: To review and evaluate grant applications.

Place: National Institutes of Health, 6700B Rockledge Drive, Bethesda, MD 20817 (Telephone Conference Call).

Contact Person: Robert G. Keefe, PhD, Scientific Review Officer, Scientific Review Program, DEA/NIAID/NIH/DHHS, Room 3256, 6700B Rockledge Drive, MSC–7616, Bethesda, MD 20892–7616, 301–402–8399, *keefero@niaid.nih.gov.*

Name of Committee: National Institute of Allergy and Infectious Diseases Special Emphasis Panel, Partnerships for Biodefense (R01).

Date: October 4, 2011.

Time: 11 a.m. to 5 p.m.

Agenda: To review and evaluate grant applications.

Place: National Institutes of Health, 6700B Rockledge Drive, Bethesda, MD 20817 (Telephone Conference Call).

Contact Person: Robert G. Keefe, PhD, Scientific Review Officer, Scientific Review Program, DEA/NIAID/NIH/DHHS, Room 3256, 6700B Rockledge Drive, MSC–7616, Bethesda, MD 20892–7616, 301–402–8399, *keefero@niaid.nih.gov.*

(Catalogue of Federal Domestic Assistance Program Nos. 93.855, Allergy, Immunology, and Transplantation Research; 93.856, Microbiology and Infectious Diseases Research, National Institutes of Health, HHS)

Dated: August 23, 2011.

Jennifer S. Spaeth,

Director, Office of Federal Advisory Committee Policy.

[FR Doc. 2011–22210 Filed 8–30–11; 8:45 am]

BILLING CODE 4140–01–P

DEPARTMENT OF HEALTH AND HUMAN SERVICES

National Institutes of Health

Center for Scientific Review; Notice of Closed Meetings

Pursuant to section 10(d) of the Federal Advisory Committee Act, as amended (5 U.S.C. App.), notice is hereby given of the following meetings.

The meetings will be closed to the public in accordance with the provisions set forth in sections 552b(c)(4) and 552b(c)(6), Title 5 U.S.C., as amended. The grant applications and the discussions could disclose confidential trade secrets or commercial property such as patentable material, and personal information concerning individuals associated with the grant applications, the disclosure of which would constitute a clearly unwarranted invasion of personal privacy.

Name of Committee: Center for Scientific Review Special Emphasis Panel, Biomedical Imaging Technology—A.

Date: October 3–4, 2011.

Time: 8 a.m. to 5 p.m.

Agenda: To review and evaluate grant applications.

Place: Washington Plaza Hotel, 10 Thomas Circle, NW., Washington, DC 20005.

Contact Person: Behrouz Shabestari, PhD, Scientific Review Officer, Center for Scientific Review, National Institutes of Health, 6701 Rockledge Drive, Room 5126, MSC 7854, Bethesda, MD 20892, (301) 435–2409, *shabestb@csr.nih.gov.*

Name of Committee: Brain Disorders and Clinical Neuroscience Integrated Review Group, Brain Injury and Neurovascular Pathologies Study Section.

Date: October 3–4, 2011.

Time: 8 a.m. to 5 p.m.

Agenda: To review and evaluate grant applications.

Place: Washington Plaza Hotel, 10 Thomas Circle, NW., Washington, DC 20005.

Contact Person: Alexander Yakovlev, PhD, Scientific Review Officer, Center for Scientific Review, National Institutes of Health, 6701 Rockledge Drive, Room 5206, MSC 7846, Bethesda, MD 20892, 301–435–1254, *yakovleva@csr.nih.gov.*

Name of Committee: Genes, Genomes, and Genetics Integrated Review Group, Prokaryotic Cell and Molecular Biology Study Section.

Date: October 5, 2011.

Time: 8 a.m. to 5 p.m.

Agenda: To review and evaluate grant applications.

Place: St. Gregory Hotel, 2033 M Street, NW., Washington, DC 20036.

Contact Person: Diane L Stassi, PhD, Scientific Review Officer, Center for Scientific Review, National Institutes of Health, 6701 Rockledge Drive, Room 3202, MSC 7808, Bethesda, MD 20892, 301–435–2514, *stassid@csr.nih.gov.*

Name of Committee: Molecular, Cellular and Developmental Neuroscience Integrated Review Group, Neurodifferentiation, Plasticity, Regeneration and Rhythmicity Study Section.

Date: October 5, 2011.

Time: 8 a.m. to 7 p.m.

Agenda: To review and evaluate grant applications.

Place: Melrose Hotel, 2430 Pennsylvania Ave., NW., Washington, DC 20037.

Contact Person: Carole L Jelsema, PhD, Chief and Scientific Review Officer, Center for Scientific Review, National Institutes of Health, 6701 Rockledge Drive, Room 4176, MSC 7850, Bethesda, MD 20892, (301) 435–1248, *jelsemac@csr.nih.gov.*

Name of Committee: Infectious Diseases and Microbiology Integrated Review Group, Virology—A Study Section.

Date: October 5–6, 2011.

Time: 8:30 a.m. to 5 p.m.

Agenda: To review and evaluate grant applications.

Place: Chevy Chase Courtyard, Chevy Chase Courtyard Hotel, 5520 Wisconsin Ave, Chevy Chase, MD 20815.

Contact Person: Joanna M Pyper, PhD, Scientific Review Officer, Center for Scientific Review, National Institutes of Health, 6701 Rockledge Drive, Room 3198, MSC 7808, Bethesda, MD 20892, (301) 435–1151, *pyperj@csr.nih.gov.*

Name of Committee: Healthcare Delivery and Methodologies Integrated Review Group, Community Influences on Health Behavior.

Date: October 5–6, 2011.

Time: 8:30 a.m. to 5 p.m.

Agenda: To review and evaluate grant applications.

Place: Pier 5 Hotel, 711 Eastern Avenue, Baltimore, MD 21202.

Contact Person: Wenchi Liang, PhD, Scientific Review Officer, Center for Scientific Review, National Institutes of Health, 6701 Rockledge Drive, Room 3150, MSC 7770, Bethesda, MD 20892, 301–435–0681, *liangw3@csr.nih.gov.*

Name of Committee: Surgical Sciences, Biomedical Imaging and Bioengineering Integrated Review Group, Surgery, Anesthesiology and Trauma Study Section.

Date: October 5–6, 2011.

Time: 1 p.m. to 2 p.m.

Agenda: To review and evaluate grant applications,

Place: DoubleTree Hotel, 8120 Wisconsin Ave., Bethesda, MD 20814.

Contact Person: Weihua Luo, MD, PhD, Scientific Review Officer, Center for Scientific Review, National Institutes of Health, 6701 Rockledge Drive, Room 5114, MSC 7854, Bethesda, MD 20892, (301) 435–1170, *luow@csr.nih.gov.*

Name of Committee: Center for Scientific Review Special Emphasis Panel, Pathophysiology and Clinical Studies of Osteonecrosis of the Jaw.

Date: October 5, 2011.

Time: 12 p.m. to 5 p.m.

Agenda: To review and evaluate grant applications.

Place: Beacon Hotel and Corporate Quarters, 1615 Rhode Island Avenue, NW., Washington, DC 20036.

Contact Person: Yi-Hsin Liu, PhD, Scientific Review Officer, Center for Scientific Review, National Institutes of Health, 6701 Rockledge Drive, Room 4214, MSC 7814, Bethesda, MD 20892, 301–435–1781, *liuyh@csr.nih.gov.*

(Catalogue of Federal Domestic Assistance Program Nos. 93.306, Comparative Medicine; 93.333, Clinical Research, 93.306, 93.333, 93.337, 93.393–93.396, 93.837–93.844, 93.846–93.878, 93.892, 93.893, National Institutes of Health, HHS)

Dated: August 23, 2011.

Jennifer S. Spaeth,

Director, Office of Federal Advisory Committee Policy.

[FR Doc. 2011–22209 Filed 8–30–11; 8:45 am]

BILLING CODE 4140–01–P

DEPARTMENT OF HEALTH AND HUMAN SERVICES

National Institutes of Health

National Institute on Aging; Notice of Closed Meetings

Pursuant to section 10(d) of the Federal Advisory Committee Act, as amended (5 U.S.C. App.), notice is hereby given of the following meetings.

The meetings will be closed to the public in accordance with the provisions set forth in sections 552b(c)(4) and 552b(c)(6), Title 5 U.S.C., as amended. The grant applications and the discussions could disclose confidential trade secrets or commercial property such as patentable material, and personal information concerning individuals associated with the grant applications, the disclosure of which would constitute a clearly unwarranted invasion of personal privacy.

Name of Committee: National Institute on Aging Special Emphasis Panel, Economics, Health, and Well Being Across Time.

Date: October 3, 2011.

Time: 12 p.m. to 4 p.m.

Agenda: To review and evaluate grant applications.

Place: National Institute on Aging, Gateway Building, 7201 Wisconsin Avenue, Suite 2C212, Bethesda, MD 20892 (Telephone Conference Call).

Contact Person: Jeannette L. Johnson, PhD, Scientific Review Officer, National Institutes on Aging, National Institutes of Health, 7201 Wisconsin Avenue, Suite 2C212, Bethesda, MD 20892, 301–402–7705, *JOHNSONJ9@NIA.nih.gov.*

Name of Committee: National Institute on Aging Special Emphasis Panel, Musculoskeletal Health in Aging Men.

Date: October 24, 2011.

Time: 2 p.m. to 5 p.m.

Agenda: To review and evaluate grant applications.

Place: National Institute on Aging, Gateway Building, 7201 Wisconsin Avenue, Suite 2C212, Bethesda, MD 20892 (Telephone Conference Call).

Contact Person: Elaine Lewis, PhD, Scientific Review Officer, Scientific Review Branch, National Institute on Aging, Gateway Building, Suite 2C212, MSC–9205, 7201 Wisconsin Avenue, Bethesda, MD 20892, 301–402–7707, *elainelewis@nia.nih.gov.*

Name of Committee: National Institute on Aging Special Emphasis Panel, Study of Elderly Sleep Cycle I.

Date: October 27, 2011.

Time: 12:30 p.m. to 4:30 p.m.

Agenda: To review and evaluate grant applications.

Place: National Institute on Aging, Gateway Building, 7201 Wisconsin Avenue, Suite 2C212, Bethesda, MD 20892 (Telephone Conference Call).

Contact Person: Bita Nakhai, PhD, Scientific Review Officer, Scientific Review Branch, National Institute on Aging, Gateway Bldg., 2C212, 7201 Wisconsin Avenue, Bethesda, MD 20814, 301–402–7701, *nakhaib@nia.nih.gov.*

Name of Committee: National Institute on Aging Special Emphasis Panel, Skeletal Muscle.

Date: November 10, 2011.

Time: 11 a.m. to 4 p.m.

Agenda: To review and evaluate grant applications.

Place: National Institute on Aging, Gateway Building, 7201 Wisconsin Avenue, Suite 2C212, Bethesda, MD 20892 (Telephone Conference Call).

Contact Person: Alicja L. Markowska, PhD, DSC, Scientific Review Branch, National Institute on Aging, 7201 Wisconsin Avenue, Suite 2C212, Bethesda, MD 20892, 301–496–9666, *markowsa@nia.nih.gov.*

(Catalogue of Federal Domestic Assistance Program Nos. 93.866, Aging Research, National Institutes of Health, HHS)

Dated: August 23, 2011.

Jennifer S. Spaeth,

Director, Office of Federal Advisory Committee Policy.

[FR Doc. 2011–22208 Filed 8–30–11; 8:45 am]

BILLING CODE 4140–01–P

DEPARTMENT OF HEALTH AND HUMAN SERVICES

National Institutes of Health

Office of the Director, National Institutes of Health; Notice of Meeting

Pursuant to section 10(a) of the Federal Advisory Committee Act, as amended (5 U.S.C. App.), notice is hereby given of a meeting of the Recombinant DNA Advisory Committee.

The meeting will be open to the public, with attendance limited to space available. Individuals who plan to attend and need special assistance, such as sign language interpretation or other reasonable accommodations, should notify the Contact Person listed below in advance of the meeting.

Name of Committee: Recombinant DNA Advisory Committee.

Date: September 13–14, 2011.

Time: September 13, 2011, 10:30 a.m. to 5:30 p.m.

Agenda: The NIH Recombinant DNA Advisory Committee (RAC) will review and discuss selected human gene transfer protocols, including a protocol that will use a recombinant Saccharomyces cerevisiae that expresses the human Brachyury protein in adults with metastatic carcinoma. The RAC will also discuss proposed amendments to Section III–E–1 of the NIH Guidelines for Research Involving Recombinant DNA Molecules (*NIH Guidelines*), experiments involving partial genomes of eukaryotic viruses in tissue culture, and Appendix B of the *NIH Guidelines,* Classification of Human Etiologic Agents by Risk Group. Please view the meeting agenda at *http://oba.od.nih.gov/*

rdna_rac/rac_meetings.html for more information.

Place: Hilton Washington/Rockville, 1750 Rockville Pike, Rockville, MD 20852.

Time: September 14, 2011, 8:30 a.m. to 1:15 p.m.

Agenda: The NIH Recombinant DNA Advisory Committee (RAC) will discuss selected human gene transfer protocols, including a study using a modified Bifidobacterium longum for targeting of chemotherapy for advanced cancer. The RAC will also hear a presentation of the results of a Phase 1/2 trial using a modified AAV1 virus that expresses the sarcoplasmic reticulum Ca^{2+}–ATPase in subjects with advanced heart failure. Please view the meeting agenda at *http://oba.od.nih.gov/rdna_rac/rac_meetings.html* for more information.

Place: Hilton Washington/Rockville, 1750 Rockville Pike, Rockville, MD 20852.

Contact Person: Chezelle George, Office of Biotechnology Activities, Office of Science Policy/OD, National Institutes of Health, 6705 Rockledge Drive, Room 750, Bethesda, MD 20892, 301–496–9838, *georgec@od.nih.gov.*

Any interested person may file written comments with the committee by forwarding the statement to the Contact Person listed on this notice. The statement should include the name, address, telephone number and when applicable, the business or professional affiliation of the interested person.

Information is also available on the Institute's/Center's home page: *http://oba.od.nih.gov/rdna/rdna.html,* where an agenda and any additional information for the meeting will be posted when available.

OMB's ''Mandatory Information Requirements for Federal Assistance Program Announcements'' (45 FR 39592, June 11, 1980) requires a statement concerning the official government programs contained in the Catalog of Federal Domestic Assistance. Normally NIH lists in its announcements the number and title of affected individual programs for the guidance of the public. Because the guidance in this notice covers virtually every NIH and Federal research program in which DNA recombinant molecule techniques could be used, it has been determined not to be cost effective or in the public interest to attempt to list these programs. Such a list would likely require several additional pages. In addition, NIH could not be certain that every Federal program would be included as many Federal agencies, as well as private organizations, both national and international, have elected to follow the NIH Guidelines. In lieu of the individual program listing, NIH invites readers to direct questions to the information address above about whether individual programs listed in the Catalog of Federal Domestic Assistance are affected.

(Catalogue of Federal Domestic Assistance Program Nos. 93.14, Intramural Research Training Award; 93.22, Clinical Research Loan Repayment Program for Individuals from Disadvantaged Backgrounds; 93.232, Loan Repayment Program for Research Generally; 93.39, Academic Research Enhancement Award; 93.936, NIH Acquired Immunodeficiency Syndrome Research Loan Repayment Program; 93.187, Undergraduate Scholarship Program for Individuals from Disadvantaged Backgrounds, National Institutes of Health, HHS)

Dated: August 22, 2011.

Jennifer S. Spaeth,

Director, Office of Federal Advisory Committee Policy.

[FR Doc. 2011–22207 Filed 8–30–11; 8:45 am]

BILLING CODE 4140–01–P

DEPARTMENT OF HEALTH AND HUMAN SERVICES

National Institutes of Health

Center for Scientific Review; Amended Notice of Meeting

Notice is hereby given of a change in the meeting of the Instrumentation and Systems Development Study Section, September 22, 2011, 8 a.m. to September 23, 2011, 5 p.m., Courtyard by Marriott, 5520 Wisconsin Avenue, Chevy Chase, MD, 20815 which was published in the **Federal Register** on August 11, 2011, 76 FR 49779–49780.

The meeting will be held September 21, 2011, 7 p.m. to September 23, 2011, 5 p.m. The meeting location remains the same. The meeting is closed to the public.

Dated: August 22, 2011.

Jennifer S. Spaeth,

Director, Office of Federal Advisory Committee Policy.

[FR Doc. 2011–22204 Filed 8–30–11; 8:45 am]

BILLING CODE 4140–01–P

DEPARTMENT OF HOMELAND SECURITY

Agency Information Collection Activities: Post-Award Contract Information

AGENCY: Office of Chief Procurement Officer, DHS.

ACTION: 60-Day notice and request for comments; Extension without change.

SUMMARY: The Department of Homeland Security, Office of Chief Procurement Officer, will submit the following Information Collection Request (ICR) to the Office of Management and Budget (OMB) for review and clearance in accordance with the Paperwork Reduction Act of 1995 (Pub. L. 104–13, 44 U.S.C. Chapter 35).

DATES: Comments are encouraged and will be accepted until October 31, 2011. This process is conducted in accordance with 5 CFR 1320.1.

ADDRESSES: Written comments and questions about this Information Collection Request should be forwarded to the Office of Chief Procurement Officer, Acquisition Policy and Legislation Office, DHS Attn.: Camara Francis, Department of Homeland Security, Office of the Chief Procurement Officer, Room 3114, Washington, DC 20528, *Camara.Francis@hq.dhs.gov,* 202–447–5904.

SUPPLEMENTARY INFORMATION: The Department of Homeland Security (DHS) Components and the Office of the Chief Procurement Officer collect information, when necessary in administering public contracts for supplies and services. The information is used to determine compliance with contract terms placed in the contract as authorized by the Federal Property and Administrative Services Act (41 U.S.C. 251 *et seq.*) and the Federal Acquisition Regulation (FAR) (48 CFR Chapter 1). Source selection documentation, Government estimate of contract price, contract modifications, Small Business Administration Certificate of Competency, Justification and approvals, determination and finding are examples of the kinds of post-award contract information that is collected are identified in pertinent sections of FAR 4.803, Contents of contract files. The complete FAR can be viewed on the Internet at *http://www.arnet.gov.*

The information requested is used by the Government's contracting officers and other acquisition personnel, including technical and legal staffs to determine contractor's technical and management progress and controls of the firms holding public contracts to determine if the firms are making appropriate progress in work agreed to and are otherwise performing in the Government's best interest. Payment of a firm's invoices (or non-payment) and/or corrective action may result from such reviews. If this information were not collected, the Government would jeopardize its operations by failing to exercise its responsibility for a major internal control in its contracts' post-award phase. Many sources of the requested information use automated word processing systems, databases, spreadsheets, project management and other commercial software to facilitate preparation of material to be submitted, particularly in the submission of periodic (e.g., monthly) reports that describe contractor performance and progress of work . With Governmentwide implementation of e-Government initiatives, it is commonplace within many of DHS's Components for submissions to be electronic.

According to Federal Procurement Data System-Next Generation (FPDS–NG) the number of Post-Contract award information has increased each year over the past two years in annual respondent and burden hours. This increase is the result of a new estimate of awards, which contributes to the Post-Award information that is collected. This collection was previously approved by OMB on January 26, 2009. This collection will be submitted to OMB for review to request approval to extend the collection past the current expiration date of January 31, 2011. There are no proposed changes to the information being collected, instructions, frequency of the collection or the use of the information being collected.

The Office of Management and Budget is particularly interested in comments which:

1. Evaluate whether the proposed collection of information is necessary for the proper performance of the functions of the agency, including whether the information will have practical utility;

2. Evaluate the accuracy of the agency's estimate of the burden of the proposed collection of information, including the validity of the methodology and assumptions used;

3. Enhance the quality, utility, and clarity of the information to be collected; and

4. Minimize the burden of the collection of information on those who are to respond, including through the use of appropriate automated, electronic, mechanical, or other technological collection techniques or other forms of information technology, e.g., permitting electronic submissions of responses.

Analysis

Agency: Office of Chief Procurement Officer, DHS.

Title: Post-Award Contract Information.

OMB Number: 1600–0003.

Frequency: On occasion.

Affected Public: Private sector.

Number of Respondents: 8,000.

Estimated Time per Respondent: 14 hours.

Total Burden Hours: 336,000.

Dated: August 22, 2011.

Richard Spires,

Chief Information Officer.

[FR Doc. 2011–22236 Filed 8–30–11; 8:45 am]

BILLING CODE 9110–9B–P

DEPARTMENT OF HOMELAND SECURITY

Agency Information Collection Activities: Solicitation of Proposal Information for Award of Public Contracts

AGENCY: Office of the Chief Procurement Officer, DHS.

ACTION: 60-Day Notice and request for comments; Extension without change of a currently approved collection.

SUMMARY: The Department of Homeland Security, Office of the Chief Procurement Officer, will submit the following Information Collection Request (ICR) to the Office of Management and Budget (OMB) for review and clearance in accordance with the Paperwork Reduction Act of 1995 (Pub. L. 104–13, 44 U.S.C. chapter 35).

DATES: Comments are encouraged and will be accepted until October 31, 2011. This process is conducted in accordance with 5 CFR 1320.1.

ADDRESSES: Written comments and questions about this Information Collection Request should be forwarded to the Office of Chief Procurement Officer, Acquisition Policy and Legislation Office, DHS *Attn.:* Camara Francis, Department of Homeland Security, Office of the Chief Procurement Officer, Room 3114, Washington, DC 20528, *Camara.Francis@hq.dhs.gov,* 202–447–5904.

SUPPLEMENTARY INFORMATION: The Department of Homeland Security (DHS) and the Office of the Chief Procurement Officer (OCPO) collect information when inviting firms to submit bids, proposals, and offers for public contracts for supplies and services. The information collection is necessary for compliance with the Federal Acquisition Regulation (FAR); 48 CFR chapter 1, the Federal Property and Administrative Services Act (Division C of Title 41), under the Small Business Innovative Research (SBIR) and Small Business Technology Transfer (STTR) programs 15 U.S.C. 628.

For solicitations to contract made through a variety of means, whether conducted orally or in writing, contracting officers normally request information from prospective offerors such as pricing information, delivery schedule compliance, and whether the offeror has the resources (both human and financial) to accomplish requirements. Examples of the kinds of information collected can be found in the FAR at FAR 13.106–1, 13.106–3, 13.302–1, –3, –5, subpart 13.5, subpart 14.2, subpart 15.2, subpart 6.1, and subpart 35.

Examples where collections of information occur in soliciting for supplies/services include the issuance of draft Requests for Proposal (RFP), Requests for Information (RFI), and Broad Agency Announcements (BAA). The Government generally issues an RFP using the uniform contract format (FAR 15.204–1) with the intent of awarding a contract to one or more prospective offerors. The RFP can require those interested in making an offer to provide information in the following areas: schedule (FAR 15.204–2); contract clauses (FAR 15.204–3); list of documents, exhibits and other attachments (FAR 15.204–4) or representations and instructions (15.204–5).

FAR 15.201(e) authorizes agencies to issue RFIs when an agency ''does not presently intend to award a contract, but wants to obtain price, delivery, other market information, or capabilities for planning purposes''. RFIs solicit responses from the public. Similarly, FAR 35.106 authorizes Federal agencies to use BAAs to ''fulfill their requirements for scientific study and experimentation directed toward advancing the state-of-the-art or increasing knowledge or understanding rather than focusing on a specific system or hardware solution.''

The DHS Science and Technology (S&T) Directorate issues BAAs soliciting white papers and proposals from the public. DHS S&T evaluates white papers and proposals received from the public in response to a DHS S&T BAA using the evaluation criteria specified in the BAA through a peer or scientific review process in accordance with FAR 35.016(d). White paper evaluation determines those research ideas that merit submission of a full proposal and proposal evaluation determines those proposals that merit selection for contract award. Unclassified white papers and proposals are typically collected via the DHS S&T BAA secure Web site, while classified white papers and proposals must be submitted via proper classified courier or proper classified mailing procedures as described in the National Industrial Security Program Operating Manual (NSPOM).

Federal agencies with an annual extramural research and development (R&D) budget exceeding $100 million are required to participate in the SBIR Program. Similarly, Federal agencies with an extramural R&D budget

exceeding $1 billion are required to participate in the STTR Program.

Federal agencies who participate in the SBIR and STTR programs must collect information from the public to: (1) Meet their reporting requirements under 15 U.S.C. 638 (b)(7), (g)(8), (i), (j)(1)(E), (j)(3)(C), (l), (o)(10), and (v); (2) Meet the requirement to maintain both a publicly accessible database of SBIR/STTR award information and a government database of SBIR/STTR award information for SBIR and STTR program evaluation under 15 U.S.C. 638 g(10), (k), (o)(9), and (o)(15); and (3) Meet requirements for public outreach under 15 U.S.C. 638 (j)(2)(F), (o)(14), and (s).

DHS is not asking for anything outside of what is already required in the FAR. Should anything outside the FAR arise, DHS will submit a request for Office of Management and Budget (OMB) approval. The prior information collect request for OMB No. 1600–005 was approved through October 31, 2011 by OMB in a Notice of OMB Action.

The information being collected is used by the Government's contracting officers and other acquisition personnel, including technical and legal staffs to determine adequacy of technical and management approach, experience, responsibility, responsiveness, expertise of the firms submitting offers, identification of members of the public (*i.e.,* small businesses) who qualify for, and are interested in participating in, the DHS SBIR Program, facilitate SBIR outreach to the public, and provide the DHS SBIR Program Office necessary and sufficient information to determine that proposals submitted by the public to the DHS SBIR Program meet criteria for consideration under the program.

Failure to collect this information would adversely affect the quality of products and services DHS receives from contractors. Potentially, contracts would be awarded to firms without sufficient experience and expertise, thereby placing the Department's operations in jeopardy. Defective and inadequate contractor deliverables would adversely affect DHS's fulfillment of the mission requirements in all areas. Additionally, the Department would be unsuccessful in identifying small businesses with research and development (R&D) capabilities, which would adversely affect the mission requirements in this area.

Many sources of the requested information use automated word processing systems, databases, emails, and, in some cases, web portals to facilitate preparation of material to be submitted and to post and collect information. It is commonplace within many of DHS's Components for submissions to be electronic as a result of implementation of e-Government initiatives.

DHS S&T uses information technology (*i.e.,* electronic web portals) in the collection of information to reduce the data gathering and records management burden. DHS S&T uses a secure Web site which the public can propose SBIR research topics and submit proposals in response to SBIR solicitations. In addition, DHS uses a web portal to review RFIs and register to submit a white paper or proposal in response to a specific BAA. The data collection forms standardize the collection of information that is necessary and sufficient for the DHS SBIR Program Office to meet its requirements under 15 U.S.C. 638.

According to Federal Procurement Data System (FPDS) and Federal Business Opportunities (FedBizOpps), the number of competitive solicitations and award actions has increased each over the past three years, thereby increasing the universe of possible respondents to DHS and its Components' solicitations. However, an increase in the information collection burden associated with the gathering of additional information to support the evaluation of solicitation responses has been offset, by the use of electronic web portals, such as CCR, FAPIIS, those used to submit SBIR research topics and submit response to DHS SBIR solicitations. Additionally, electronic web portals are used to collect unclassified white papers and proposals to reduce the data gathering and records management burden for BAAs.

In addition to issuance of solicitations over the Internet or electronic systems; increased use of oral presentations in *lieu* of written proposals, permitted under FAR 15.102; and increased use of combined contract action notices/requests for proposals, as encouraged by FAR 12.603, are contributing to the relative stability of DHS's information collection burden to the public. There is no change in the information being collected.

The Office of Management and Budget is particularly interested in comments which:

1. Evaluate whether the proposed collection of information is necessary for the proper performance of the functions of the agency, including whether the information will have practical utility;

2. Evaluate the accuracy of the agency's estimate of the burden of the proposed collection of information, including the validity of the methodology and assumptions used;

3. Enhance the quality, utility, and clarity of the information to be collected; and

4. Minimize the burden of the collection of information on those who are to respond, including through the use of appropriate automated, electronic, mechanical, or other technological collection techniques or other forms of information technology, *e.g.,* permitting electronic submissions of responses.

Analysis:

Agency: Office of the Chief Procurement Officer, DHS.

Title: Solicitation of Proposal Information for Award of Public Contracts.

OMB Number: 1600–0005.

Frequency: On occasion.

Affected Public: Private sector.

Number of Respondents: 17,180.

Estimated Time per Respondent: 13 hours.

Total Burden Hours: 721,560.

Dated: August 22, 2011.

Richard Spires,

Chief Information Officer.

[FR Doc. 2011–22237 Filed 8–30–11; 8:45 am]

BILLING CODE 9110–9B–P

DEPARTMENT OF HOMELAND SECURITY

[Docket No. DHS–2011–0043]

Telecommunications Service Priority System

AGENCY: National Protection and Programs Directorate, DHS.

ACTION: 30-Day Notice and request for comments; Extension, without change, of a currently approved collection.

SUMMARY: The Department of Homeland Security (DHS), National Protection and Programs Directorate (NPPD), Office of Cybersecurity and Communications (CS&C), National Communications System (NCS) will submit the following information collection request (ICR) to the Office of Management and Budget (OMB) for review and clearance in accordance with the Paperwork Reduction Act of 1995 (Pub. L. 104–13, 44 U.S.C. Chapter 35). DHS is soliciting comments concerning Extension, without change, of a currently approved collection: 1670–0005, Telecommunications Service Priority (TSP) System. DHS previously published this information collection request (ICR) in the **Federal Register**, 76 FR 2011–13953 (June 7, 2011), for a 60-day public comment period. No

comments were received by DHS. The purpose of this notice is to allow an additional 30 days for public comments.

DATES: Comments are encouraged and will be accepted until September 30, 2011. This process is conducted in accordance with 5 CFR 1320.10.

ADDRESSES: Written comments and questions about this ICR should be forwarded to DHS/NPPD/CS&C/NCS, 245 Murray Lane, Mail Stop 0615, Arlington, VA 20598–0615. E-mailed requests should go to Deborah Bea, *deborah.bea@dhs.gov*. Comments must be identified by DHS–2011–0043 and may also be submitted by one of the following methods:

- *Federal eRulemaking Portal: http://www.regulations.gov.*
- *E-mail: oira_submission@omb.eop.gov.* Include the docket number in the subject line of the message.
- *Fax:* (202) 395–5806.

Instructions: All submissions received must include the words ''Department of Homeland Security'' and the docket number for this action. Comments received will be posted without alteration at *http://www.regulations.gov*, including any personal information provided.

OMB is particularly interested in comments that:

1. Evaluate whether the proposed collection of information is necessary for the proper performance of the functions of the agency, including whether the information will have practical utility;
2. Evaluate the accuracy of the agency's estimate of the burden of the proposed collection of information, including the validity of the methodology and assumptions used;
3. Enhance the quality, utility, and clarity of the information to be collected; and
4. Minimize the burden of the collection of information on those who are to respond, including through the use of appropriate automated, electronic, mechanical, or other technological collection techniques or other forms of information technology, e.g., permitting electronic submissions of responses.

SUPPLEMENTARY INFORMATION: The purpose of the TSP System is to provide a legal basis for telecommunications vendors to provide priority provisioning and restoration of telecommunications services supporting national security and emergency preparedness functions. The information gathered via the TSP System forms is the minimum necessary for the DHS/NCS to effectively manage the TSP System.

Analysis

Agency: Department of Homeland Security, National Protection and Programs Directorate, Office of Cybersecurity and Communications, National Communications System.

Title: Telecommunications Service Priority System.

OMB Number: 1670–0005.

Frequency: Information is required on particular occasions when an organization decides it wants TSP on its critical circuits. It is occasional/situational—the program office is not able to determine when this will occur.

Affected Public: Business and state, local, or tribal governments.

Number of Respondents: 28,161 respondents.

Estimated Time per Respondent: 3 hours, 17 minutes.

Total Burden Hours: 7,727.42 annual burden hours.

Total Burden Cost (capital/startup): $251,141.15.

Total Burden Cost (operating/maintaining): $0.00.

Dated: August 24, 2011.

David Epperson,

Chief Information Officer, National Protection and Programs Directorate, Department of Homeland Security.

[FR Doc. 2011–22238 Filed 8–30–11; 8:45 am]

BILLING CODE 9110–9P–P

DEPARTMENT OF HOMELAND SECURITY

Federal Emergency Management Agency

[Docket ID: FEMA–2011–0013; OMB No. 1660–0106]

Agency Information Collection Activities: Submission for OMB Review; Comment Request, Integrated Public Alert and Warning Systems (IPAWS) Inventory

AGENCY: Federal Emergency Management Agency, DHS.

ACTION: Notice.

SUMMARY: The Federal Emergency Management Agency (FEMA) will submit the information collection abstracted below to the Office of Management and Budget for review and clearance in accordance with the requirements of the Paperwork Reduction Act of 1995. The submission will describe the nature of the information collection, the categories of respondents, the estimated burden (i.e., the time, effort and resources used by respondents to respond) and cost, and the actual data collection instruments FEMA will use.

DATES: Comments must be submitted on or before September 30, 2011.

ADDRESSES: Submit written comments on the proposed information collection to the Office of Information and Regulatory Affairs, Office of Management and Budget. Comments should be addressed to the Desk Officer for the Department of Homeland Security, Federal Emergency Management Agency, and sent via electronic mail to *oira.submission@omb.eop.gov* or faxed to (202) 395–5806.

FOR FURTHER INFORMATION CONTACT: Requests for additional information or copies of the information collection should be made to Director, Records Management Division, 1800 South Bell Street, Arlington, VA 20598–3005, facsimile number (202) 646–3347, or e-mail address *FEMA-Information-Collections-Management@dhs.gov.*

SUPPLEMENTARY INFORMATION: Presidential Executive Order 13407 establishes the policy for an effective, reliable, integrated, flexible, and comprehensive system to alert and warn the American people in situations of war, terrorist attack, natural disaster, or other hazards to public safety and well-being. The Executive Order requires that DHS establish an inventory of public alert and warning resources, capabilities, and the degree of integration at the Federal, State, territorial, Tribal, and local levels of government. The Integrated Public Alert and Warning System (IPAWS) implements the requirements of the Executive Order. The information collected has, and will continue to consist of the public alert and warning systems, as well as the communication systems being used for collaboration and situational awareness at the Local Emergency Operations Center (EOC) level and higher. This information will help FEMA identify the technologies currently in use or desired for inclusion into IPAWS.

Collection of Information

Title: Integrated Public Alert and Warning Systems (IPAWS) Inventory.

Type of Information Collection: Revision of a currently approved information collection.

OMB Number: 1660–0106.

Form Titles and Numbers: FEMA Form 142–1–1, IPAWS Inventory.

Abstract: FEMA will be conducting an inventory, evaluation and assessment of the capabilities of Federal, State, territorial, Tribal, and local government alert and warning systems. The IPAWS Inventory and Evaluation Survey collects data that will facilitate the

integration of public alert and warning systems. It also reduces Federal planning costs by leveraging existing State systems.

Affected Public: State, local, territorial, and Tribal Government.

Estimated Number of Respondents: 1,932.

Frequency of Response: Once.

Estimated Average Hour Burden per Respondent: 3 hours.

Estimated Total Annual Burden Hours: 5,796 hours.

Estimated Cost: There are no annual start-up or capital costs.

Lesia M. Banks,

Director, Records Management Division, Mission Support Bureau, Federal Emergency Management Agency, Department of Homeland Security.

[FR Doc. 2011–22249 Filed 8–30–11; 8:45 am]

BILLING CODE 9110–14–P

DEPARTMENT OF HOUSING AND URBAN DEVELOPMENT

[Docket No. FR–5486–N–21]

Notice of Submission of Proposed Information Collection for Public Comment; Notice of Public Interest for the FY12 Transformation Initiative: Sustainable Communities Research Grant (SCRGP) Program

AGENCY: Office of the Assistant Secretary of Policy Development and Research, HUD.

ACTION: Notice.

SUMMARY: The proposed information collection requirement described below has been submitted to the Office of Management and Budget (OMB) for review, as required by the Paperwork Reduction Act. The Department is soliciting public comments on the subject proposal.

DATES: *Comments Due Date:* October 31, 2011.

ADDRESSES: Interested persons are invited to submit comments regarding this proposal. Comments must be received within sixty (60) days from the date of this Notice. Comments should refer to the proposal by name/or OMB Control Number and should be sent to: Reports Liaison Officer, Office of Policy Development and Research, Department of Housing and Urban Development, 451 7th Street, SW., Room 8228, Washington, DC 20410–6000.

FOR FURTHER INFORMATION CONTACT: Regina Gray, Division of Affordable Housing Research and Technology, Office of Policy Development and Research, Room 8132, U.S. Department of Housing and Urban Development, 451 7th Street, SW., Washington, DC 20410; via telephone at (202) 402–2876 (this is not a toll free number); via e-mail at *regina.c.gray@hud.gov.*

SUPPLEMENTARY INFORMATION: The Department of Housing and Urban Development will submit the proposed extension of information collection to OMB for review, as required by the Paperwork Reduction Act of 1995 (44 U.S.C. Chapter 35, as amended).

This Notice is soliciting comments from members of the public and affected agencies concerning the proposed collection of information to: (1) Evaluate whether the proposed collection of information is necessary for the proper performance of the functions of the agency, including whether the information will have practical utility; (2) evaluate the accuracy of the agency's estimate of the burden of the proposed collection of information; (3) enhance the quality, utility, and clarity of the information to be collected; and (4) minimize the burden of the collection of information on those who are to respond, including through the use of appropriate automated collection techniques or other forms of information technology; *e.g.,* permitting electronic submission of responses.

This Notice also lists the following information:

Title of Proposal: FY12 Transformation Initiative: Sustainable Communities Research Grant (SCRGP) Program.

The FY12 Sustainable Communities Research Grant Program (SCRGP) will support efforts by the research community to build on the existing evidence-based studies in the broad area of sustainability, and to evaluate new and existing tools and strategies that promote and implement more effective policies that: (a) Preserve housing affordability; (b) improve accessibility through effective transit systems; (c) reduce the regulatory barriers to sustainable development and strengthen land use planning and urban design standards; (d) advance economic opportunities that create jobs and promote diverse communities; and, (e) address the health of the environment by reducing carbon emissions and conserving energy.

This program is approved by HUD's authority and administered under the Transformation Initiative (TI) account. The maximum grant performance period is for 24 months (2 years). Awards under this NOPI will be made in the form of a Cooperative Agreements. A Cooperative Agreement means the Government will have substantial involvement during performance of the contemplated research project. The actual Notice of Public Interest (NOPI) will contain the selection criteria for awarding grants and specific requirements that will apply to selected grantees.

OMB Control Number: 2528–XXXX.

Description of the Need for the Information and Proposed Use: This information is being collected to select applicants for award in this statutorily created competitive grant programs. This information will be used to monitor performance of grantees to ensure that they meet statutory and program goals and requirements.

Agency Form Numbers: SF–424, SF–424 Supplemental, HUD–424–CB, SF–LLL, HUD–2880, HUD–2993, HUD–96010 and HUD–96011.

http://portal.hud.gov/portal/page/portal/HUD/program_offices/administration/hudclips/forms.

Members of Affected Public: Institutions of higher education, accredited by a national or regional accrediting agency recognized by the U.S. Department of Education are the official applicants. Estimation of the total numbers of hours needed to prepare the information collection, including the number of respondents, frequency of responses, and hours of responses.

Information pursuant to grant award will be submitted once a year. The following chart details the respondent burden on an annual and semi-annual basis:

	Number of respondents	Total annual responses	Hours per response	Total hours
Applicants	20	10	3.5	700
Quarterly Reports	5	4	6	120
Final Reports	5	1	8	40
Recordkeeping	5	1	4	20
Totals	20	20	N/A	880

The estimated number of respondents is 20; the frequency of response is 10 per year; 3.5 hours per response.

Total Estimated Burden Hours: 880.

Status of the Proposed Information Collection: Pending OMB Approval.

Authority: Section 3506 of the Paperwork Reduction Act of 1995, 44 U.S.C. Chapter 35, as amended. U.S. Code Title 12 1701z; Research and Demonstrations.

Dated: August 25, 2011.

Kevin Neary,

Deputy Assistant, Secretary for the Office of Research, Evaluation and Monitoring.

[FR Doc. 2011–22321 Filed 8–30–11; 8:45 am]

BILLING CODE 4210–67–P

DEPARTMENT OF THE INTERIOR

Fish and Wildlife Service

[FWS–R5–R–2010–N266; BAC–4311–K9–S3]

Supawna Meadows National Wildlife Refuge, Salem County, NJ; Final Comprehensive Conservation Plan and Finding of No Significant Impact for Environmental Assessment

AGENCY: Fish and Wildlife Service, Interior.

ACTION: Notice of availability.

SUMMARY: We, the U.S. Fish and Wildlife Service (Service), announce the availability of our final comprehensive conservation plan (CCP) and finding of no significant impact (FONSI) for the environmental assessment (EA) for Supawna Meadows National Wildlife Refuge (NWR), Salem County, New Jersey. In this final CCP, we describe how we will manage this refuge for the next 15 years.

ADDRESSES: You may view or obtain copies of the final CCP (including the FONSI) and the draft CCP/EA by any of the following methods. They are available in hard copy, CD–ROM, or as a download from our Web site.

Agency Web Site: Download a copy of the documents at *http://www.fws.gov/northeast/planning/SupawnaMeadows/ccphome.html.*

E-mail: northeastplanning@fws.gov. Include ''Supawna Meadows NWR Final CCP'' in the subject line of the message.

Mail: Brian Braudis, Refuge Manager, c/o Cape May NWR, 24 Kimbles Beach Road, Cape May Court House, NJ 08210.

In-Person Viewing or Pickup: Call 609–463–0994 to make an appointment during regular business hours at 24 Kimbles Beach Road, Cape May Court House, NJ 08210.

Local Library: See ''Public Availability of Documents'' under **SUPPLEMENTARY INFORMATION.**

FOR FURTHER INFORMATION CONTACT: Brian Braudis, Refuge Manager, 609–463–0994 (phone); *capemaynwr@fws.gov* (e-mail).

SUPPLEMENTARY INFORMATION:

Introduction

With this notice, we finalize the CCP process for Supawna Meadows NWR. We started this process through a notice in the **Federal Register** (72 FR 54280; September 24, 2007). We released the draft CCP and the EA to the public, announcing and requesting comments in a notice of availability in the **Federal Register** (75 FR 59287; September 27, 2010).

Supawna Meadows NWR currently includes 3,016 acres of marsh, grassland, shrubland, and forest habitats. The approved acquisition boundary encompasses 4,527 acres along the Upper Delaware Bay in Salem County. Supawna Meadows NWR was established to benefit migratory birds, breeding birds, and wild animals, protect natural resources, and provide opportunities for suitable wildlife-oriented recreation.

Refuge visitors engage in wildlife observation and photography, hunting, and fishing. Portions of the refuge are open to deer hunting, waterfowl hunting, and fishing and crabbing per State regulations. Finns Point Rear Range Light, listed on the National Register of Historic Places, draws a number of visitors as well.

We announce our decision and the availability of the FONSI for the final CCP for Supawna Meadows NWR in accordance with National Environmental Policy Act (NEPA) (40 CFR 1506.6(b)) requirements. We completed a thorough analysis of impacts on the human environment, which we included in the EA that accompanied the draft CCP.

The CCP will guide us in managing and administering Supawna Meadows NWR for the next 15 years. Alternative B, as we described in the draft CCP/EA as the Service-preferred alternative, with five modifications made in response to public comments, is the foundation for this final CCP.

Background

The National Wildlife Refuge System Administration Act of 1966 (16 U.S.C. 668dd-668ee) (Administration Act), as amended by the National Wildlife Refuge System Improvement Act of 1997, requires us to develop a CCP for each national wildlife refuge. The purpose for developing a CCP is to provide refuge managers with a 15-year plan for achieving refuge purposes and contributing toward the mission of the National Wildlife Refuge System, consistent with sound principles of fish and wildlife management, conservation, legal mandates, and our policies. In addition to outlining broad management direction on conserving wildlife and their habitats, CCPs identify wildlife-dependent recreational opportunities available to the public, including opportunities for hunting, fishing, wildlife observation and photography, and environmental education and interpretation. We will review and update the CCP at least every 15 years in accordance with the Administration Act.

CCP Alternatives, Including Selected Alternative

To address several issues and develop a plan based on the purposes for establishing the refuge, and the vision and goals we identified, three alternatives were evaluated in our draft CCP/EA (75 FR 59287). The alternatives share some actions in common, such as acquiring land within the current refuge acquisition boundary, protecting cultural resources, distributing refuge revenue sharing payments, and monitoring water quality. There are also some actions shared by alternatives A and B only. These include assessing public use opportunities on newly acquired lands, monitoring and abating wildlife diseases, and supporting biological and ecological research investigations. Other actions distinguish the alternatives. The draft CCP/EA describes the alternatives in detail, and relates them to the issues and concerns.

Alternative A, ''Current Management,'' is the ''No Action'' alternative required by NEPA. It describes our existing management priorities and activities. It would maintain our present levels of refuge staffing and the biological and visitor programs now in place. We would continue to focus efforts on providing native tidal marsh habitat for Federal trust resources, in particular, for migrating and nesting wading birds, wintering habitats for marshbirds, waterfowl, shorebirds, and other wildlife. We would continue to actively manage tidal marsh and grassland habitats, and would maintain dikes and water levels on impoundments that have water control structures.

Alternative B, the ''Service-preferred Alternative,'' emphasizes management of specific refuge habitats to support Federal trust resources and species of conservation concern in the area, as well as providing additional visitor opportunities on the refuge. The priority would be to protect and restore the refuge's native tidal marsh habitat to

benefit Pea Patch Island colonial-breeding wading birds, as well as secretive marshbirds, migratory waterfowl, shorebirds, and other birds of conservation concern. A secondary consideration would be to manage a diversity of other refuge wetland and upland habitats to benefit breeding and migrating songbirds, waterfowl, and raptors, as well as amphibians, reptiles, and mammals of conservation concern. Our Visitor Services program would be enhanced to provide more opportunities for wildlife observation, photography, hunting, fishing, environmental education, and interpretation.

Alternative C, ''Cease Management and Close Refuge to Public Uses,'' would close Supawna Meadows NWR to all public uses and cease all habitat management activities. There would be no funding allocated for any projects at the refuge. This alternative would only partially achieve the refuge purposes, vision, and goals, and respond to public issues. Cape May NWR staff would conduct semiannual site inspections requiring about 40 staff hours per year. We would continue to meet our trust obligations under the Federal Endangered Species Act, which requires us to take measures to benefit the recovery of any federally listed species that might be found on the refuge in the future. We would also continue to comply with the National Historic Preservation Act by maintaining Finns Point Rear Range Light.

Comments

We solicited comments on the draft CCP and the EA for Supawna Meadows NWR from September 27 to October 27, 2010 (75 FR 59287). We evaluated all substantive comments received during the public comment period, and included a summary of comments and our responses as appendix H of the final CCP.

Selected Alternative

We have selected alternative B for implementation, with the following modifications:

- We clarified the rationale for adopting the State's deer hunting safety zones.
- We added a paragraph stating we may evaluate black bear hunting on the refuge if the State opens the area to hunting and if there is enough interest.
- We inserted a paragraph stating that although we are not proposing to open the refuge to turkey hunting at this time, we are willing to discuss opening the refuge to a spring turkey season with assistance from the State.
- We added a Finding of Appropriateness for the release of the *Rhinoncomimus latipes* weevil by the New Jersey Department of Agriculture for the biological control of mile-a-minute weed (*Polygonum perfoliatum*).
- We updated the White-tailed Deer Hunt Compatibility Determination to include the State's deer hunting safety zones.

In summary, we believe modified alternative B combines the actions that would most effectively achieve refuge purposes, vision, and goals, and respond to public issues. The basis of our decision is detailed in Appendix I of the final CCP.

Public Availability of Documents

In addition to the methods in **ADDRESSES**, you can view or obtain documents at the following locations:

- Our *Web site: http://www.fws.gov/northeast/planning/SupawnaMeadows/ccphome.html.*
- *Public Library:* Pennsville Library, located at 14 North Broadway, Pennsville, NJ 08070, during regular library hours.

Dated: July 27, 2011.

Wendi Weber,

Acting Regional Director, Northeast Region, U.S. Fish and Wildlife Service, Hadley, MA 01035.

[FR Doc. 2011–22038 Filed 8–30–11; 8:45 am]

BILLING CODE 4310–55–P

DEPARTMENT OF THE INTERIOR

Bureau of Indian Affairs

Renewal of Agency Information Collection for Verification of Indian Preference for Employment With BIA and IHS; Request for Comments

AGENCY: Bureau of Indian Affairs, Interior.

ACTION: Notice of submission to the Office of Management and Budget.

SUMMARY: In compliance with the Paperwork Reduction Act of 1995, the Bureau of Indian Affairs (BIA) is submitting to the Office of Management and Budget (OMB) a request for renewal of the information collection for Verification of Indian Preference for Employment. The information collection is currently authorized by OMB Control Number 1076–0160, which expires August 31, 2011.

DATES: Interested persons are invited to submit comments on or before September 30, 2011.

ADDRESSES: You may submit comments on the information collection to the Desk Officer for the Department of the Interior at the Office of Management and Budget, by facsimile to (202) 395–5806 or you may send an e-mail to: *OIRA_DOCKET@ omb.eop.gov.* Please send a copy of your comments to Matt Crain, Acting Deputy Director—Office of Indian Services, Bureau of Indian Affairs, 1849 C Street, NW., MS 4513, Washington, DC 20240; e-mail: *matt.crain@bia.gov.*

FOR FURTHER INFORMATION CONTACT: De Springer (402) 878–2502. To see a copy of the entire collection submitted to OMB, go to *http://www.reginfo.gov* (select Information Collection Review, Currently Under Review).

SUPPLEMENTARY INFORMATION:

I. Abstract

The BIA is seeking renewal of the approval for the information collection conducted under the 25 U.S.C. 43, 36 Stat. 472, *inter alia,* and implementing regulations, at 25 CFR part 5, regarding verification of Indian preference for employment. The purpose of Indian preference is to encourage qualified Indian persons to seek employment with the BIA and Indian Health Service (IHS) by offering preferential treatment to qualified candidates of Indian heritage. BIA collects the information to ensure compliance with Indian preference hiring requirements. The information collection relates only to individuals applying for employment with the BIA and the IHS. The tribe's involvement is limited to verifying membership information submitted by the applicant. The collection of information allows certain persons who are of Indian descent to receive preference when appointments are made to vacancies in positions with the BIA and IHS as well as in any unit that has been transferred intact from the BIA to a Bureau or office within the Department of the Interior or the Department of Health and Human Services and that continues to perform functions formerly performed as part of the BIA and IHS. You are eligible for preference if (a) You are a member of a federally recognized Indian tribe; (b) you are a descendant of a member and you were residing within the present boundaries of any Indian reservation on June 1, 1934; (c) you are an Alaska native; or (d) you possess one-half degree Indian blood derived from tribes that are indigenous to the United States.

II. Request for Comments

BIA requests that you send your comments on this collection to the location listed in the **ADDRESSES** section. Your comments should address: (a) The necessity of the information collection for the proper performance of the agencies, including whether the

information will have practical utility; (b) the accuracy of our estimate of the burden (hours and cost) of the collection of information, including the validity of the methodology and assumptions used; (c) ways we could enhance the quality, utility and clarity of the information to be collected; and (d) ways we could minimize the burden of the collection of the information on the respondents, such as through the use of automated collection techniques or other forms of information technology.

Please note that an agency may not sponsor or conduct, and an individual need not respond to, a collection of information unless it has a valid OMB Control Number. This information collection expires August 31, 2011.

It is our policy to make all comments available to the public for review at the location listed in the **ADDRESSES** section during the hours of 9 a.m.–5 p.m., Eastern Time, Monday through Friday except for legal holidays. Before including your address, phone number, e-mail address or other personally identifiable information, be advised that your entire comment—including your personally identifiable information—may be made public at any time. While you may request that we withhold your personally identifiable information, we cannot guarantee that we will be able to do so.

III. Data

OMB Control Number: 1076–0160.

Title: Verification of Indian preference for Employment in the BIA and IHS, 25 CFR part 5.

Brief Description of Collection: Submission of this information by Indian applicants for jobs with BIA and IHS allows the Personnel Offices of BIA and IHS to verify that the individual meets the requirements for Indian preference in hiring. Response is required to obtain the benefit of preferential hiring.

Type of Review: Extension without change of a currently approved collection.

Respondents: Qualified Indian persons who are seeking preference in employment with the BIA and IHS.

Number of Respondents: Approximately 5,000.

Total Number of Responses: Approximately 5,000 per year.

Frequency of Response: On occasion.

Estimated Time per Response: One-half hour.

Estimated Total Annual Burden: 2,500 hours, on average.

Estimated Annual Cost: $6,520 (postage and copying costs).

Dated: August 17, 2011.

Alvin Foster,

Acting Chief Information Officer—Indian Affairs .

[FR Doc. 2011–22304 Filed 8–30–11; 8:45 am]

BILLING CODE 4310–4J–P

DEPARTMENT OF THE INTERIOR

Bureau of Indian Affairs

Revision of Agency Information Collection for the Indian Child Welfare Assistance Report; Request for Comments

AGENCIES: Bureau of Indian Affairs, Interior.

ACTION: Notice of submission to the Office of Management and Budget.

SUMMARY: In compliance with the Paperwork Reduction Act of 1995, the Bureau of Indian Affairs (BIA) is submitting to the Office of Management and Budget (OMB) a request for revision of the collection of information for the Indian Child Welfare Assistance Report, 25 CFR part 23. The revision affects the form that tribal Indian Child Welfare Act (ICWA) coordinators provide to BIA on a quarterly basis. The information collection is currently authorized by OMB Control Number 1076–0131, which expires August 31, 2011.

DATES: Interested persons are invited to submit comments on or before *September 30, 2011.*

ADDRESSES: You may submit comments on the information collection to the Desk Officer for the Department of the Interior at the Office of Management and Budget, by facsimile to (202) 395–5806 or you may send an e-mail to: *OIRA_DOCKET@ omb.eop.gov.* Please send a copy of your comments to Dr. Linda Ketcher, Office of Indian Services, Bureau of Indian Affairs, 1849 C Street, NW., MS–3070, Washington, DC 20240.

FOR FURTHER INFORMATION CONTACT: Dr. Linda Ketcher (202) 513–7610. To see a copy of the entire collection submitted to OMB, go to *http://www.reginfo.gov* (select Information Collection Review, Currently Under Review).

SUPPLEMENTARY INFORMATION:

I. Abstract

The BIA is seeking revision of the information collection conducted under the Indian Child Welfare Act (ICWA) and implementing regulations, at 25 CFR part 23. BIA collects the information using a consolidated caseload form, which tribal ICWA program directors fill out. BIA uses the information to determine the extent of service needs in local Indian communities, assess ICWA program effectiveness, and provide data for the annual program budget justification. The aggregated report is not considered confidential. BIA is seeking to revise the form to include instructions and more explicit reporting indicators. There is no change to the estimated number of responses or burden hours.

II. Request for Comments

BIA requests that you send your comments on this collection to the location listed in the **ADDRESSES** section. Your comments should address: (a) The necessity of the information collection for proper administration of the ICWA program, including whether the information will have practical utility; (b) the accuracy of our estimate of the burden (hours and cost) of the collection of information, including the validity of the methodology and assumptions used; (c) ways we could enhance the quality, utility and clarity of the information to be collected; and (d) ways we could minimize the burden of the collection of the information on the respondents, such as through the use of automated collection techniques or other forms of information technology.

Please note that an agency may not sponsor or conduct, and an individual need not respond to, a collection of information unless it has a valid OMB Control Number. This information collection expires August 31, 2011.

It is our policy to make all comments available to the public for review at the location listed in the **ADDRESSES** section during the hours of 9 a.m.–5 p.m., Eastern Time, Monday through Friday except for legal holidays. Before including your address, phone number, e-mail address or other personally identifiable information, be advised that your entire comment—including your personally identifiable information—may be made public at any time. While you may request that we withhold your personally identifiable information, we cannot guarantee that we will be able to do so.

III. Data

OMB Control Number: 1076–0131.

Title: Indian Child Welfare Assistance Report, 25 CFR part 23.

Brief Description of Collection: Submission of this information by Indian tribes allows BIA to consolidate and review selected data on Indian child welfare cases. The data are useful on a local level, to the tribes and tribal entities that collect it, for case management purposes. The data are useful on a nationwide basis for planning and budget purposes. Response is required to obtain a benefit.

Type of Review: Extension with revision of a currently approved collection.

Respondents: Indian tribes or tribal entities that are operating programs for Indian tribes.

Number of Respondents: 536 per year, on average.

Total Number of Responses: 2,144 per year, on average.

Frequency of Response: Four times per year.

Estimated Time per Response: One-half hour.

Estimated Total Annual Burden: 1,072 hours, on average.

Dated: August 17, 2011.

Alvin Foster,

Acting Chief Information Officer—Indian Affairs.

[FR Doc. 2011–22303 Filed 8–30–11; 8:45 am]

BILLING CODE 4310–4J–P

DEPARTMENT OF THE INTERIOR

National Park Service

[NPS–WASO–NRNHL–0811–8178; 2280–665]

National Register of Historic Places; Notification of Pending Nominations and Related Actions

Nominations for the following properties being considered for listing or related actions in the National Register were received by the National Park Service before August 6, 2011. Pursuant to § 60.13 of 36 CFR part 60, written comments are being accepted concerning the significance of the nominated properties under the National Register criteria for evaluation. Comments may be forwarded by United States Postal Service, to the National Register of Historic Places, National Park Service, 1849 C St., NW., MS 2280, Washington, DC 20240; by all other carriers, National Register of Historic Places, National Park Service, 1201 Eye St., NW., 8th Floor, Washington DC 20005; or by fax, 202–371–6447. Written or faxed comments should be submitted by September 15, 2011. Before including your address, phone number, e-mail address, or other personal identifying information in your comment, you should be aware that your entire comment—including your personal identifying information—may be made publicly available at any time. While you can ask us in your comment to withhold your personal identifying information from public review, we cannot guarantee that we will be able to do so.

J. Paul Loether,

Chief, National Register of Historic Places/National Historic Landmarks Program.

CALIFORNIA

Los Angeles County

Freeman, Rose Graham and James Allen, House, (Residential Architecture of Pasadena: Influence of the Arts and Crafts Movement MPS) 1330 Hillcrest Ave., Pasadena, 11000654

COLORADO

Adams County

Robidoux, M.J. Lavina, House, 1615 Galena St., Aurora, 11000655

INDIANA

Boone County

Maplelawn Farmstead, (Eagle Township and Pike Township, Indiana MPS) 9575 Whitestown Rd., Zionsville, 11000656

Lake County

Polk Street Concrete Cottage Historic District, (Concrete in Steel City: The Edison Concept Houses of Gary Indiana MPS) 604–614 Polk St., Gary, 11000657

Marion County

Broad Ripple Firehouse—Indianapolis Fire Department Station 32, 6330 Guilford Ave., Indianapolis, 11000658

Ripley County

Central Batesville Historic District, Roughly bounded by Catherine, Vine & Boehringer Sts. & Eastern Ave., Batesville, 11000659

Vanderburgh County

Black, Glenn A., House, 8215 Pollack Ave., Evansville, 11000660

IOWA

Dubuque County

Holy Ghost Catholic Historic District, (Dubuque, Iowa MPS) 2887–2921 Central Ave., Dubuque, 11000661

Scott County

Putnam—Parker Block, 100–130 W 2nd. St., Davenport, 11000662

KENTUCKY

Taylor County

Buchanan, Thomas Gant, House, 5025 New Columbia Rd., Campbellsville, 11000680

Caldwell, James, House, 105 Colonial Dr., Campbellsville, 11000681

Robinson—Gaines House, 4639 New Columbia Rd., Campbellsville, 11000679

MASSACHUSETTS

Worcester County

Berlin Town Hall, 12 Woodward Ave., Berlin, 11000663

Bullard House, 4 Woodward Ave., Berlin, 11000664

Searles Hill Cemetery, Searles Hill Rd., Phillipston, 11000665

MICHIGAN

Huron County

Port Austin Reef Light, (Light Stations of the United States MPS) Port Austin Reef, 2.5 mi. N. of Port Austin (Port aux Barques Township), Port Austin, 11000666

Oakland County

Taliaferro, Thomas W. and Margaret, House, 1115 Eton Cross, Bloomfield Hills, 11000668

St. Clair County

Marine City Water Works, 229 S. Main St., Marine City, 11000667

MISSOURI

Jackson County

Southeast Third Street and Southeast Corder Avenue Ranch House Historic District, (Lee's Summit, Missouri MPS) Roughly the S. side of SE. 3rd. E. of Independence Ave., along SE. Corder Ave N. of SE. 4th & 5 E. lots S. of 4th., Lee's Summit, 11000669

OHIO

Cuyahoga County

Moreland Theater Building, 11810–11824 Buckeye Rd., Cleveland, 11000670

Lawrence County

Vesuvius Furnace—Stone Bridge (Boundary Decrease), Vesuvius Recreation Area off OH 93, Ironton, 11000671

Lucas County

Libbey, Edward Drummond, High School, 1250 Western Ave., Toledo, 11000672

PUERTO RICO

Orocovis Municipality

Cueva La Espiral, (Prehistoric Rock Art of Puerto Rico MPS) Address Restricted, Orocovis, 11000673

RHODE ISLAND

Newport County

Shoreby Hill Historic District, Roughly bounded by Whittier Rd., Prudence Ln., Emerson Rd., Conanicus Ave., Knowles Ct., Coronado St. & Longfellow Rd., Jamestown, 11000674

Providence County

Phillipsdale Historic District, Roughly bounded by Seekonk R., Roger Williams & Ruth Aves., East Providence, 11000675

SOUTH CAROLINA

Oconee County

Retreat Rosenwald School, (Rosenwald School Building Program in South Carolina, 1917–1932) 150 Pleasant Hill Cir., Westminster, 11000676

WISCONSIN

Milwaukee County

APPOMATTOX (shipwreck), (Great Lakes Shipwreck Sites of Wisconsin MPS), 150 yds. off Atwater Beach, Shorewood, 11000677

Milwaukee Breakwater Light, (Light Stations of the United States MPS) S. end of N.

Breakwater, .7 mi. E. of mouth of Milwaukee R., Milwaukee, 11000678

[FR Doc. 2011–22239 Filed 8–30–11; 8:45 am]

BILLING CODE 4312–51–P

DEPARTMENT OF THE INTERIOR

Bureau of Reclamation

Central Valley Project Improvement Act, Water Management Plans

AGENCY: Bureau of Reclamation, Interior.

ACTION: Notice of availability.

SUMMARY: The following Water Management Plans are available for review:

- Del Puerto Water District.
- Chowchilla Water District.
- Orange Cove Irrigation District.
- James Irrigation District.
- Tranquility Irrigation District.
- Kaweah Delta Water Conservation District.

To meet the requirements of the Central Valley Project Improvement Act of 1992 (CVPIA) and the Reclamation Reform Act of 1982, the Bureau of Reclamation developed and published the Criteria for Evaluating Water Management Plans (Criteria). For the purpose of this announcement, Water Management Plans (Plans) are considered the same as Water Conservation Plans. The above entities have each developed a Plan, which Reclamation has evaluated and preliminarily determined to meet the requirements of these Criteria. Reclamation is publishing this notice in order to allow the public to review the plans and comment on the preliminary determinations. Public comment on Reclamation's preliminary (*i.e.,* draft) determination is invited at this time.

DATES: All public comments must be received by September 30, 2011.

ADDRESSES: Please mail comments to Ms. Christy Ritenour, Bureau of Reclamation, 2800 Cottage Way, MP–410, Sacramento, California, 95825, or e-mail at *critenour@usbr.gov.*

FOR FURTHER INFORMATION CONTACT: To be placed on a mailing list for any subsequent information, please contact Ms. Christy Ritenour at the e-mail address above or 916–978–5281 (TDD 978–5608).

SUPPLEMENTARY INFORMATION: We are inviting the public to comment on our preliminary (*i.e.,* draft) determination of Plan adequacy. Section 3405(e) of the CVPIA (Title 34 Pub. L. 102–575), requires the Secretary of the Interior to establish and administer an office on Central Valley Project water conservation best management practices that shall ''develop criteria for evaluating the adequacy of all water conservation plans developed by project contractors, including those plans required by section 210 of the Reclamation Reform Act of 1982.'' Also, according to Section 3405(e)(1), these criteria must be developed ''with the purpose of promoting the highest level of water use efficiency reasonably achievable by project contractors using best available cost-effective technology and best management practices.'' These criteria state that all parties (Contractors) that contract with Reclamation for water supplies (municipal and industrial contracts over 2,000 acre-feet and agricultural contracts over 2,000 irrigable acres) must prepare a Plan that contains the following information:

1. Description of the District.
2. Inventory of Water Resources.
3. Best Management Practices (BMPs) for Agricultural Contractors.
4. BMPs for Urban Contractors.
5. Plan Implementation.
6. Exemption Process.
7. Regional Criteria.
8. Five-Year Revisions.

Reclamation evaluates Plans based on these criteria. A copy of these Plans will be available for review at Reclamation's Mid-Pacific Regional Office, 2800 Cottage Way, MP–410, Sacramento, California, 95825. Our practice is to make comments, including names and home addresses of respondents, available for public review. If you wish to review a copy of these Plans, please contact Ms. Christy Ritenour.

Public Disclosure

Before including your name, address, phone number, e-mail address, or other personal identifying information in your comment, you should be aware that your entire comment—including your personal identifying information—may be made publicly available at any time. While you can ask us in your comment to withhold your personal identifying information from public review, we cannot guarantee that we will be able to do so.

Dated: August 25, 2011.

Richard J. Woodley,

Regional Resources Manager, Mid-Pacific Region, Bureau of Reclamation.

[FR Doc. 2011–22259 Filed 8–30–11; 8:45 am]

BILLING CODE 4310–MN–P

INTERNATIONAL TRADE COMMISSION

Notice of Receipt of Complaint; Solicitation of Comments Relating to the Public Interest

AGENCY: U.S. International Trade Commission.

ACTION: Notice.

SUMMARY: Notice is hereby given that the U.S. International Trade Commission has received a complaint entitled *In Re Certain Digital Photo Frames and Image Display Devices and Components Thereof,* DN 2842; the Commission is soliciting comments on any public interest issues raised by the complaint.

FOR FURTHER INFORMATION CONTACT: James R. Holbein, Secretary to the Commission, U.S. International Trade Commission, 500 E Street, SW., Washington, DC 20436, telephone (202) 205–2000. The public version of the complaint can be accessed on the Commission's electronic docket (EDIS) at *http://edis.usitc.gov,* and will be available for inspection during official business hours (8:45 a.m. to 5:15 p.m.) in the Office of the Secretary, U.S. International Trade Commission, 500 E Street, SW., Washington, DC 20436, telephone (202) 205–2000.

General information concerning the Commission may also be obtained by accessing its Internet server (*http://www.usitc.gov*). The public record for this investigation may be viewed on the Commission's electronic docket (EDIS) at *http://edis.usitc.gov.* Hearing-impaired persons are advised that information on this matter can be obtained by contacting the Commission's TDD terminal on (202) 205–1810.

SUPPLEMENTARY INFORMATION: The Commission has received a complaint filed on behalf of Technology Properties Limited LLC on August 24, 2011. The complaint alleges violations of section 337 of the Tariff Act of 1930 (19 U.S.C. 1337) in the importation into the United States, the sale for importation, and the sale within the United States after importation of certain digital photo frames and image display devices and components thereof. The complaint names as respondents Action Electronics Co., Ltd. of Taiwan; Aiptek International Inc. of Taiwan; Aluratek Inc. of CA; Audiovox Corporation of NY; CEIVA Logic of CA; Circus World Displays Ltd. of Canada; Coby Electronics Corporation of NY; Curtis International Ltd. of Canada; Digital Spectrum Solutions Inc. of CA; Eastman Kodak Company of NY; Mustek

Systems, Inc. of Taiwan; Nextar Inc. of CA; Pandigital, Dublin of CA; Royal Consumer Information Products Inc. of NJ; Sony Corporation of Japan; Transcend Information Inc. of Taiwan; ViewSonic Corporation of CA; Win Accord Ltd. of Taiwan; and WinAccord USA Inc. of CA.

The complainant, proposed respondents, other interested parties, and members of the public are invited to file comments, not to exceed five pages in length, on any public interest issues raised by the complaint. Comments should address whether issuance of an exclusion order and/or a cease and desist order in this investigation would negatively affect the public health and welfare in the United States, competitive conditions in the United States economy, the production of like or directly competitive articles in the United States, or United States consumers.

In particular, the Commission is interested in comments that:

(i) Explain how the articles potentially subject to the orders are used in the United States;

(ii) Identify any public health, safety, or welfare concerns in the United States relating to the potential orders;

(iii) Indicate the extent to which like or directly competitive articles are produced in the United States or are otherwise available in the United States, with respect to the articles potentially subject to the orders; and

(iv) Indicate whether Complainant, Complainant's licensees, and/or third party suppliers have the capacity to replace the volume of articles potentially subject to an exclusion order and a cease and desist order within a commercially reasonable time.

Written submissions must be filed no later than by close of business, five business days after the date of publication of this notice in the **Federal Register**. There will be further opportunities for comment on the public interest after the issuance of any final initial determination in this investigation.

Persons filing written submissions must file the original document and 12 true copies thereof on or before the deadlines stated above with the Office of the Secretary. Submissions should refer to the docket number (''Docket No. 2842'') in a prominent place on the cover page and/or the first page. The Commission's rules authorize filing submissions with the Secretary by facsimile or electronic means only to the extent permitted by section 201.8 of the rules (see Handbook for Electronic Filing Procedures, *http://www.usitc.gov/secretary/fed_reg_notices/rules/documents/handbook_on_electronic_filing.pdf*). Persons with questions regarding electronic filing should contact the Secretary (202–205–2000).

Any person desiring to submit a document to the Commission in confidence must request confidential treatment. All such requests should be directed to the Secretary to the Commission and must include a full statement of the reasons why the Commission should grant such treatment. *See* 19 CFR 201.6. Documents for which confidential treatment by the Commission is properly sought will be treated accordingly. All nonconfidential written submissions will be available for public inspection at the Office of the Secretary.

This action is taken under the authority of section 337 of the Tariff Act of 1930, as amended (19 U.S.C. 1337), and of sections 201.10 and 210.50(a)(4) of the Commission's Rules of Practice and Procedure (19 CFR 201.10, 210.50(a)(4)).

Issued: August 25, 2011.

By order of the Commission.

James R. Holbein,

Secretary to the Commission.

[FR Doc. 2011–22263 Filed 8–30–11; 8:45 am]

BILLING CODE 7020–02–P

INTERNATIONAL TRADE COMMISSION

[Inv. No. 337–TA–800]

In the Matter of Certain Wireless Devices With 3G Capabilities and Components Thereof; Notice of Institution of Investigation

Institution of investigation pursuant to 19 U.S.C. 1337.

AGENCY: U.S. International Trade Commission.

ACTION: Notice.

SUMMARY: Notice is hereby given that a complaint was filed with the U.S. International Trade Commission on July 26, 2011, under section 337 of the Tariff Act of 1930, as amended, 19 U.S.C. 1337, on behalf of InterDigital Communications, LLC of King of Prussia, Pennsylvania; InterDigital Technology Corporation of Wilmington, Delaware; and IPR Licensing, Inc. of Wilmington, Delaware. A letter supplementing the complaint was filed on August 12, 2011. The complaint, as supplemented, alleges violations of section 337 based upon the importation into the United States, the sale for importation, and the sale within the United States after importation of certain wireless devices with 3G capabilities and components thereof by reason of infringement of certain claims of U.S. Patent No. 7,349,540 (''the '540 patent''); U.S. Patent No. 7,502,406 (''the '406 patent''); U.S. Patent No. 7,536,013 (''the '013 patent''); U.S. Patent No. 7,616,970 (''the '970 patent''); U.S. Patent No. 7,706,332 (''the '332 patent''); U.S. Patent No. 7,706,830 (''the '830 patent''); and U.S. Patent No. 7,970,127 (''the '127 patent''). The complaint further alleges that an industry in the United States exists as required by subsection (a)(2) of section 337.

The complainants request that the Commission institute an investigation and, after the investigation, issue an exclusion order and cease and desist orders.

ADDRESSES: The complaint, except for any confidential information contained therein, is available for inspection during official business hours (8:45 a.m. to 5:15 p.m.) in the Office of the Secretary, U.S. International Trade Commission, 500 E Street, SW., Room 112, Washington, DC 20436, telephone (202) 205–2000. Hearing impaired individuals are advised that information on this matter can be obtained by contacting the Commission's TDD terminal on (202) 205–1810. Persons with mobility impairments who will need special assistance in gaining access to the Commission should contact the Office of the Secretary at (202) 205–2000. General information concerning the Commission may also be obtained by accessing its Internet server at *http://www.usitc.gov*. The public record for this investigation may be viewed on the Commission's electronic docket (EDIS) at *http://edis.usitc.gov*.

FOR FURTHER INFORMATION CONTACT: The Office of Unfair Import Investigations, U.S. International Trade Commission, telephone (202) 205–2560.

Authority: The authority for institution of this investigation is contained in section 337 of the Tariff Act of 1930, as amended, and in section 210.10 of the Commission's Rules of Practice and Procedure, 19 CFR 210.10 (2011).

Scope of Investigation: Having considered the complaint, the U.S. International Trade Commission, on August 24, 2011, *Ordered That*—

(1) Pursuant to subsection (b) of section 337 of the Tariff Act of 1930, as amended, an investigation be instituted to determine whether there is a violation of subsection (a)(1)(B) of section 337 in the importation into the United States, the sale for importation, or the sale within the United States after

importation of certain wireless devices with 3G capabilities and components thereof that infringe one or more of claims 1–15 of the '540 patent; claims 1, 2, 6–9, 13, 15–16, 20–22, 26, 28–30, 34–36, and 40 of the '406 patent; claims 1–19 of the '013 patent; claims 1–18 of the '970 patent; claims 1–27 of the '332 patent; claims 1–3, 5–8, 10, 16–18, 20–23, and 25 of the '830 patent; and claims 1–14 of the '127 patent, and whether an industry in the United States exists as required by subsection (a)(2) of section 337;

(2) For the purpose of the investigation so instituted, the following are hereby named as parties upon which this notice of investigation shall be served:

(a) The complainants:

InterDigital Communications, LLC, 781 Third Avenue, King of Prussia, PA 19406–1409.

InterDigital Technology Corporation, Hagley Building, Suite 105, 3411 Silverside Road, Concord Plaza, Wilmington, DE 19810–4812.

IPR Licensing, Inc., Hagley Building, Suite 105, 3411 Silverside Road, Concord Plaza, Wilmington, DE 19810–4812.

(b) The respondents are the following entities alleged to be in violation of section 337, and are the parties upon which the complaint is to be served:

Huawei Technologies Co., Ltd., Bantian, Longgang District, Shenzhen, Guangdong Province 518129, China.

FutureWei Technologies, Inc. d/b/a Huawei, Technologies (USA), 5700 Tennyson Parkway, Suite #500, Plano, TX 75024.

Nokia Corporation, Keilalahdentie 2–4, FIN–00045 Nokia Group, Espoo, Finland.

Nokia Inc., 102 Corporate Park Drive, White Plains, NY 10604.

ZTE Corporation, ZTE Plaza, No. 55 Hi-Tech Road South, Shenzhen, Guangdong Province 518057, China.

ZTE (USA) Inc., 2425 N. Central Expressway, Ste. 600, Richardson, TX 75080.

(c) The Office of Unfair Import Investigations, U.S. International Trade Commission, 500 E Street, SW., Suite 401, Washington, DC 20436; and

(3) For the investigation so instituted, the Chief Administrative Law Judge, U.S. International Trade Commission, shall designate the presiding Administrative Law Judge.

Responses to the complaint and the notice of investigation must be submitted by the named respondents in accordance with section 210.13 of the Commission's Rules of Practice and Procedure, 19 CFR 210.13. Pursuant to 19 CFR 201.16(d)–(e) and 210.13(a), such responses will be considered by the Commission if received not later than 20 days after the date of service by the Commission of the complaint and the notice of investigation. Extensions of time for submitting responses to the complaint and the notice of investigation will not be granted unless good cause therefor is shown.

Failure of a respondent to file a timely response to each allegation in the complaint and in this notice may be deemed to constitute a waiver of the right to appear and contest the allegations of the complaint and this notice, and to authorize the administrative law judge and the Commission, without further notice to the respondent, to find the facts to be as alleged in the complaint and this notice and to enter an initial determination and a final determination containing such findings, and may result in the issuance of an exclusion order or a cease and desist order or both directed against the respondent.

Issued: August 25, 2011.

By order of the Commission.

James R. Holbein,

Secretary to the Commission.

[FR Doc. 2011–22266 Filed 8–30–11; 8:45 am]

BILLING CODE 7020–02–P

INTERNATIONAL TRADE COMMISSION

[Inv. No. 337–TA–801]

In the Matter of Certain Products Containing Interactive Program Guide and Parental Controls Technology; Notice of Institution of Investigation

Institution of investigation pursuant to 19 U.S.C. 1337.

AGENCY: U.S. International Trade Commission.

ACTION: Notice.

SUMMARY: Notice is hereby given that a complaint was filed with the U.S. International Trade Commission on July 26, 2011, under section 337 of the Tariff Act of 1930, as amended, 19 U.S.C. 1337, on behalf of Rovi Corporation of Santa Clara, California; Rovi Guides, Inc. (f/k/a Gemstar-TV Guide International Inc.), of Santa Clara, California; United Video Properties, Inc. of Santa Clara, California; and Gemstar Development Corporation of Santa Clara, California. The complaint alleges violations of section 337 based upon the importation into the United States, the sale for importation, and the sale within the United States after importation of certain products containing interactive program guide and parental controls technology by reason of infringement of certain claims of U.S. Patent No. 6,305,016 (''the '016 patent''); U.S. Patent No. 7,493,643 (''the '643 patent''); and U.S. Patent No. RE41,993 (''the '993 patent''). The complaint further alleges that an industry in the United States exists as required by subsection (a)(2) of section 337.

The complainants request that the Commission institute an investigation and, after the investigation, issue an exclusion order and a cease and desist order.

ADDRESSES: The complaint, except for any confidential information contained therein, is available for inspection during official business hours (8:45 a.m. to 5:15 p.m.) in the Office of the Secretary, U.S. International Trade Commission, 500 E Street, SW., Room 112, Washington, DC 20436, telephone (202) 205–2000. Hearing impaired individuals are advised that information on this matter can be obtained by contacting the Commission's TDD terminal on (202) 205–1810. Persons with mobility impairments who will need special assistance in gaining access to the Commission should contact the Office of the Secretary at (202) 205–2000. General information concerning the Commission may also be obtained by accessing its Internet server at *http://www.usitc.gov.* The public record for this investigation may be viewed on the Commission's electronic docket (EDIS) at *http://edis.usitc.gov.*

FOR FURTHER INFORMATION CONTACT: The Office of Dockets Services, U.S. International Trade Commission, telephone (202) 205–1802.

Authority: The authority for institution of this investigation is contained in section 337 of the Tariff Act of 1930, as amended, and in section 210.10 of the Commission's Rules of Practice and Procedure, 19 CFR 210.10 (2011).

Scope of Investigation: Having considered the complaint, the U.S. International Trade Commission, on August 25, 2011, *Ordered That*—

(1) Pursuant to subsection (b) of section 337 of the Tariff Act of 1930, as amended, an investigation be instituted to determine whether there is a violation of subsection (a)(1)(B) of section 337 in the importation into the United States, the sale for importation, or the sale within the United States after importation of certain products containing interactive program guide and parental controls technology that infringe one or more of claims 1–3, 13–16, 20, 26, and 27 of the '016 patent; claims 1–4, 7–10, and 13–16 of the '643

patent; and claims 18–21, 23–25, 30, 31, 38, 39, 41, 43, 44, 49, 56, 57, 59, 61, 62, and 67 of the '993 patent, and whether an industry in the United States exists as required by subsection (a)(2) of section 337;

(2) For the purpose of the investigation so instituted, the following are hereby named as parties upon which this notice of investigation shall be served:

(a) The complainants are:

Rovi Corporation, 2830 De La Cruz Boulevard, Santa Clara, CA 95050.

Rovi Guides, Inc. (f/k/a Gemstar-TV Guide International Inc.), 2830 De La Cruz Boulevard, Santa Clara, CA 95050.

United Video Properties, Inc., 2830 De La Cruz Boulevard, Santa Clara, CA 95050.

Gemstar Development Corporation, 2830 De La Cruz Boulevard, Santa Clara, CA 95050.

(b) The respondents are the following entities alleged to be in violation of section 337, and are the parties upon which the complaint is to be served:

Sharp Corporation, 22–22 Nagaike-cho, Abeno-ku, Osaka 545–8522, Japan.

Sharp Electronics Corporation, 1 Sharp Plaza, Mahwah, NJ 07495.

Sharp Electronics Manufacturing, Company of America, Inc., 1 Sharp Plaza, Mahwah, NJ 07495.

(3) For the investigation so instituted, the Chief Administrative Law Judge, U.S. International Trade Commission, shall designate the presiding Administrative Law Judge.

The Office of Unfair Import Investigations will not participate as a party in this investigation.

Responses to the complaint and the notice of investigation must be submitted by the named respondents in accordance with section 210.13 of the Commission's Rules of Practice and Procedure, 19 CFR 210.13. Pursuant to 19 CFR 201.16(d)–(e) and 210.13(a), such responses will be considered by the Commission if received not later than 20 days after the date of service by the Commission of the complaint and the notice of investigation. Extensions of time for submitting responses to the complaint and the notice of investigation will not be granted unless good cause therefor is shown.

Failure of a respondent to file a timely response to each allegation in the complaint and in this notice may be deemed to constitute a waiver of the right to appear and contest the allegations of the complaint and this notice, and to authorize the administrative law judge and the Commission, without further notice to the respondent, to find the facts to be as alleged in the complaint and this notice and to enter an initial determination and a final determination containing such findings, and may result in the issuance of an exclusion order or a cease and desist order or both directed against the respondent.

Issued: August 25, 2011.

By order of the Commission.

James R. Holbein,

Secretary to the Commission.

[FR Doc. 2011–22265 Filed 8–30–11; 8:45 am]

BILLING CODE 7020–02–P

INTERNATIONAL TRADE COMMISSION

[Inv. No. 337–TA–802]

In the Matter of Certain Light Emitting Diodes and Products Containing Same; Notice of Institution of Investigation

Institution of investigation pursuant to 19 U.S.C. 1337.

AGENCY: U.S. International Trade Commission.

ACTION: Notice.

SUMMARY: Notice is hereby given that a complaint was filed with the U.S. International Trade Commission on July 27, 2011, under section 337 of the Tariff Act of 1930, as amended, 19 U.S.C. 1337, on behalf of LG Electronics, Inc. of Korea and LG Innotek Co., Ltd. of Korea. The complaint alleges violations of section 337 based upon the importation into the United States, the sale for importation, and the sale within the United States after importation of certain light emitting diodes and products containing same by reason of infringement of certain claims of U.S. Patent No. 7,928,465 (''the '465 patent''); U.S. Patent No. 7,956,364 (''the '364 patent''); U.S. Patent No. 6,841,802 (''the '802 patent''); U.S. Patent No. 7,649,210 (''the '210 patent''); U.S. Patent No. 7,884,388 (''the '388 patent''); U.S. Patent No. 7,821,024 (''the '024 patent''); U.S. Patent No. 7,868,348 (''the '348 patent''); and U.S. Patent No. 7,768,025 (''the '025 patent''). The complaint further alleges that an industry in the United States exists as required by subsection (a)(2) of section 337.

The complainants request that the Commission institute an investigation and, after the investigation, issue an exclusion order and cease and desist orders.

ADDRESSES: The complaint, except for any confidential information contained therein, is available for inspection during official business hours (8:45 a.m. to 5:15 p.m.) in the Office of the Secretary, U.S. International Trade Commission, 500 E Street, SW., Room 112, Washington, DC 20436, telephone (202) 205–2000. Hearing impaired individuals are advised that information on this matter can be obtained by contacting the Commission's TDD terminal on (202) 205–1810. Persons with mobility impairments who will need special assistance in gaining access to the Commission should contact the Office of the Secretary at (202) 205–2000. General information concerning the Commission may also be obtained by accessing its Internet server at *http://www.usitc.gov*. The public record for this investigation may be viewed on the Commission's electronic docket (EDIS) at *http://edis.usitc.gov*.

FOR FURTHER INFORMATION CONTACT: The Office of Dockets Services, U.S. International Trade Commission, telephone (202) 205–1802.

Authority: The authority for institution of this investigation is contained in section 337 of the Tariff Act of 1930, as amended, and in section 210.10 of the Commission's Rules of Practice and Procedure, 19 CFR 210.10 (2011).

Scope of Investigation: Having considered the complaint, the U.S. International Trade Commission, on August 25, 2011, *Ordered That*—

(1) Pursuant to subsection (b) of section 337 of the Tariff Act of 1930, as amended, an investigation be instituted to determine whether there is a violation of subsection (a)(1)(B) of section 337 in the importation into the United States, the sale for importation, or the sale within the United States after importation of certain light emitting diodes and products containing same that infringe one or more of claims 1, 2, 10, 11, 13–15, 17, 18, 20–23, 26–34, and 36–42 of the '465 patent; claims 1–12, 14–22, 24–30, 33, 35, 36, 38–46, 49, 50, 52–54, 60, 61, 63, 65, 66, 68, and 69 of the '364 patent; claims 1, 2, 4, 11, 15, 17, 18, 21, and 24 of the '802 patent; claims 1–4, 6, 8–12, 16–21, 24–29, and 31–37 of the '210 patent; claims 1–4, 6–10, 13–17, 19, 22–29, 32, 40, 42–45, and 48 of the '388 patent; claims 10–13, 19, 24, 25, and 29 of the '024 patent; claims 1, 2, 8–10, 12, 14, 18, and 20–24 of the '348 patent; and claims 1–7, 9, 11, 14–16, and 23 of the '025 patent, and whether an industry in the United States exists as required by subsection (a)(2) of section 337;

(2) For the purpose of the investigation so instituted, the following are hereby named as parties upon which this notice of investigation shall be served:

(a) The complainants are:

LG Electronics, Inc., LG Twin Towers, 20, Yeouido-dong, Yeongdungpo-gu, Seoul, 150–721, Korea.

LG Innotek Co., Ltd., Seoul Square 20F, Namdaemunno 5-ga, Jung-gu, Seoul 100–714, Korea.

(b) The respondents are the following entities alleged to be in violation of section 337, and are the parties upon which the complaint is to be served:

OSRAM GmbH, Hellabrunner Strasse 1, 81543 Munich, Germany.

OSRAM Sylvania Inc., 100 Endicott Street, Danvers, MA.

OSRAM Opto Semiconductors GmbH, Leibnizstr 4, 93055 Regensburg, Germany.

(3) For the investigation so instituted, the Chief Administrative Law Judge, U.S. International Trade Commission, shall designate the presiding Administrative Law Judge.

The Office of Unfair Import Investigations will not participate as a party in this investigation.

Responses to the complaint and the notice of investigation must be submitted by the named respondents in accordance with section 210.13 of the Commission's Rules of Practice and Procedure, 19 CFR 210.13. Pursuant to 19 CFR 201.16(d)–(e) and 210.13(a), such responses will be considered by the Commission if received not later than 20 days after the date of service by the Commission of the complaint and the notice of investigation. Extensions of time for submitting responses to the complaint and the notice of investigation will not be granted unless good cause therefor is shown.

Failure of a respondent to file a timely response to each allegation in the complaint and in this notice may be deemed to constitute a waiver of the right to appear and contest the allegations of the complaint and this notice, and to authorize the administrative law judge and the Commission, without further notice to the respondent, to find the facts to be as alleged in the complaint and this notice and to enter an initial determination and a final determination containing such findings, and may result in the issuance of an exclusion order or a cease and desist order or both directed against the respondent.

Issued: August 25, 2011.

By order of the Commission.

James R. Holbein,

Secretary to the Commission.

[FR Doc. 2011–22264 Filed 8–30–11; 8:45 am]

BILLING CODE 7020–02–P

DEPARTMENT OF JUSTICE

Bureau of Alcohol, Tobacco, Firearms and Explosives

[OMB Number 1140–0019]

Agency Information Collection Activities: Proposed Collection; Comments Requested: Federal Firearms License (FFL) RENEWAL Application

ACTION: 60-Day notice of information collection under review.

The Department of Justice (DOJ), Bureau of Alcohol, Tobacco, Firearms and Explosives (ATF), will be submitting the following information collection request to the Office of Management and Budget (OMB) for review and approval in accordance with the Paperwork Reduction Act of 1995. This notice requests comments from the public and affected agencies concerning the proposed information collection. Comments are encouraged and will be accepted for ''sixty days'' until October 31, 2011. This process is conducted in accordance with 5 CFR 1320.10.

If you have comments especially on the estimated public burden or associated response time, suggestions, or need a copy of the proposed information collection instrument with instructions or additional information, please contact Patricia Power, *Patricia.Power@atf.gov,* Chief, Federal Firearms Licensing Center, 244 Needy Road, Martinsburg, WV 20226.

Written comments and suggestions from the public and affected agencies concerning the proposed collection of information are encouraged. Your comments should address one or more of the following four points:

—Evaluate whether the proposed collection of information is necessary for the proper performance of the functions of the agency, including whether the information will have practical utility;

—Evaluate the accuracy of the agency's estimate of the burden of the proposed collection of information, including the validity of the methodology and assumptions used;

—Enhance the quality, utility, and clarity of the information to be collected; and

—Minimize the burden of the collection of information on those who are to respond, including through the use of appropriate automated, electronic, mechanical, or other technological collection techniques or other forms of information technology, e.g., permitting electronic submission of responses.

Summary of Information Collection

(1) *Type of Information Collection:* Revision of a currently approved collection.

(2) *Title of the Form/Collection:* Federal Firearms License (FFL) RENEWAL Application.

(3) *Agency form number, if any, and the applicable component of the Department of Justice sponsoring the collection:* Form Number: ATF F 8 (5310.11) Part 11. Bureau of Alcohol, Tobacco, Firearms and Explosives.

(4) *Affected public who will be asked or required to respond, as well as a brief abstract:* Primary: Business or other for-profit. Other: Individual or households.

Need for Collection

The form is filed by the licensee desiring to renew a Federal firearms license. It is used to identify the applicant, locate the business/collection premises, identify the type of business/collection activity, and determine the eligibility of the applicant.

(5) *An estimate of the total number of respondents and the amount of time estimated for an average respondent to respond:* It is estimated that 35,000 respondents will complete a 25 minute form.

(6) *An estimate of the total public burden (in hours) associated with the collection:* There are an estimated 14,700 annual total burden hours associated with this collection.

If additional information is required contact: Jerri Murray, Department Clearance Officer, Policy and Planning Staff, Justice Management Division, United States Department of Justice, Two Constitution Square, 145 N Street, NE., Room 2E–502, Washington, DC 20530.

Jerri Murray,

Department Clearance Officer, PRA, U.S. Department of Justice.

[FR Doc. 2011–22180 Filed 8–30–11; 8:45 am]

BILLING CODE 4410–FY–P

DEPARTMENT OF JUSTICE

Bureau of Alcohol, Tobacco, Firearms and Explosives

[OMB Number 1140–0022]

Agency Information Collection Activities: Proposed Collection; Comments Requested: Federal Explosives License/Permit (FEL) Renewal Application

ACTION: 60-Day Notice of Information Collection Under Review.

The Department of Justice (DOJ), Bureau of Alcohol, Tobacco, Firearms

and Explosives (ATF), will be submitting the following information collection request to the Office of Management and Budget (OMB) for review and approval in accordance with the Paperwork Reduction Act of 1995. This notice requests comments from the public and affected agencies concerning the proposed information collection. Comments are encouraged and will be accepted for ''sixty days'' until October 31, 2011. This process is conducted in accordance with 5 CFR 1320.10.

If you have comments especially on the estimated public burden or associated response time, suggestions, or need a copy of the proposed information collection instrument with instructions or additional information, please contact Christopher R. Reeves, *Christopher.Reeves@atf.gov* Chief, Federal Explosives Licensing Center, 244 Needy Road, Martinsburg, WV 25405.

Written comments and suggestions from the public and affected agencies concerning the proposed collection of information are encouraged. Your comments should address one or more of the following four points:

—Evaluate whether the proposed collection of information is necessary for the proper performance of the functions of the agency, including whether the information will have practical utility;
—Evaluate the accuracy of the agency's estimate of the burden of the proposed collection of information, including the validity of the methodology and assumptions used;
—Enhance the quality, utility, and clarity of the information to be collected; and
—Minimize the burden of the collection of information on those who are to respond, including through the use of appropriate automated, electronic, mechanical, or other technological collection techniques or other forms of information technology, e.g., permitting electronic submission of responses.

Summary of Information Collection

(1) *Type of Information Collection:* Revision of a currently approved collection.

(2) *Title of the Form/Collection:* Federal Explosives License/Permit (FEL) Renewal Application.

(3) *Agency form number, if any, and the applicable component of the Department of Justice sponsoring the collection:* Form Number: ATF F 5400.14/5400.15, Part III. Bureau of Alcohol, Tobacco, Firearms and Explosives.

(4) *Affected public who will be asked or required to respond, as well as a brief abstract:* Primary: Business or other for-profit. Other: Federal Government, State, Local, or Tribal Government.

Need for Collection

The form is used for the renewal of an explosive license or permit. The renewal application is used by ATF to determine that the applicant remains eligible to retain the license or permit.

(5) *An estimate of the total number of respondents and the amount of time estimated for an average respondent to respond:* It is estimated that 2,500 respondents will complete a 25 minute form.

(6) *An estimate of the total public burden (in hours) associated with the collection:* There is an estimated 825 annual total burden hours associated with this collection.

If additional information is required contact: Jerri Murray, Department Clearance Officer, Policy and Planning Staff, Justice Management Division, United States Department of Justice, Two Constitution Square, Room 2E–502, 145 N Street, NE., Washington, DC 20530.

Jerri Murray,

Department Clearance Officer, PRA, U.S. Department of Justice.

[FR Doc. 2011–22181 Filed 8–30–11; 8:45 am]

BILLING CODE 4410–FY–P

DEPARTMENT OF LABOR

Office of the Secretary

Agency Information Collection Activities; Submission for OMB Review; Comment Request; Claim Adjudication Process for Alleged Presence of Pneumoconiosis

ACTION: Notice.

SUMMARY: The Department of Labor (DOL) is submitting the revised Office of Workers' Compensation Programs sponsored information collection request (ICR) titled, ''Claim Adjudication Process for Alleged Presence of Pneumoconiosis,'' to the Office of Management and Budget (OMB) for review and approval for use in accordance with the Paperwork Reduction Act (PRA) of 1995 (44 U.S.C. 3501 *et seq.*).

DATES: Submit comments on or before September 30, 2011.

ADDRESSES: A copy of this ICR with applicable supporting documentation; including a description of the likely respondents, proposed frequency of response, and estimated total burden may be obtained from the RegInfo.gov Web site, *http://www.reginfo.gov/public/do/PRAMain,* on the day following publication of this notice or by contacting Michel Smyth by telephone at 202–693–4129 (this is not a toll-free number) or sending an e-mail to *DOL_PRA_PUBLIC@dol.gov.*

Submit comments about this request to the Office of Information and Regulatory Affairs, Attn: OMB Desk Officer for the U.S. Department of Labor, Office of Workers' Compensation Programs, Office of Management and Budget, Room 10235, Washington, DC 20503, Telephone: 202–395–6929/Fax: 202–395–6881 (these are not toll-free numbers), e-mail: *OIRA_submission@omb.eop.gov.*

FOR FURTHER INFORMATION CONTACT: Contact Michel Smyth by telephone at 202–693–4129 (this is not a toll-free number) or by e-mail at *DOL_PRA_PUBLIC@dol.gov.*

SUPPLEMENTARY INFORMATION: Regulation 20 CFR part 718 specifies that certain information relative to the medical condition of a claimant who is alleging the presence of pneumoconiosis be obtained as a routine function of the claim adjudication process. The medical specifications in the regulations have been formatted in a variety of forms to promote efficiency and accuracy in gathering the required data. These forms were designed to meet the need to gather medical evidence.

This ICR has been characterized as a revision. The Patient Protection and Affordable Care Act of 2010 contained two provisions that affected the Black Lung Benefits Act. In addition, the OWCP has made some formatting changes to the forms associated with this information collection; however, those cosmetic changes are not expected to change the burden.

This information collection is subject to the PRA. A Federal agency generally cannot conduct or sponsor a collection of information, and the public is generally not required to respond to an information collection, unless it is approved by the OMB under the PRA and displays a currently valid OMB Control Number. In addition, notwithstanding any other provisions of law, no person shall generally be subject to penalty for failing to comply with a collection of information if the collection of information does not display a valid OMB Control Number. *See* 5 CFR 1320.5(a) and 1320.6. The DOL obtains OMB approval for this information collection under OMB Control Number 1240–0023. The current OMB approval is scheduled to expire on

August 31, 2011; however, it should be noted that existing information collection requirements submitted to the OMB receive a month-to-month extension while they undergo review. For additional information, see the related notice published in the **Federal Register** on February 23, 2011 (76 FR 10070).

Interested parties are encouraged to send comments to the OMB, Office of Information and Regulatory Affairs at the address shown in the **ADDRESSES** section within 30 days of publication of this notice in the **Federal Register**. In order to help ensure appropriate consideration, comments should reference OMB Control Number 1240–0023. The OMB is particularly interested in comments that:

- Evaluate whether the proposed collection of information is necessary for the proper performance of the functions of the agency, including whether the information will have practical utility;
- Evaluate the accuracy of the agency's estimate of the burden of the proposed collection of information, including the validity of the methodology and assumptions used;
- Enhance the quality, utility, and clarity of the information to be collected; and
- Minimize the burden of the collection of information on those who are to respond, including through the use of appropriate automated, electronic, mechanical, or other technological collection techniques or other forms of information technology, *e.g.,* permitting electronic submission of responses.

Agency: Office of Worker Compensation Programs.

Title of Collection: Claim Adjudication Process for Alleged Presence of Pneumoconiosis.

OMB Control Number: 1240–0023.

Affected Public: Private sector—businesses or other for-profits.

Total Estimated Number of Respondents: 24,000.

Total Estimated Number of Responses: 24,000.

Total Estimated Annual Burden Hours: 5,840.

Total Estimated Annual Other Costs Burden: $0.

Dated: August 25, 2011.

Michel Smyth,

Departmental Clearance Officer.

[FR Doc. 2011–22292 Filed 8–30–11; 8:45 am]

BILLING CODE 4510–CK–P

DEPARTMENT OF LABOR

Office of the Secretary

Agency Information Collection Activities; Submission for OMB Review; Comment Request; Hazard Communication

ACTION: Notice.

SUMMARY: The Department of Labor (DOL) is submitting the Mine Safety and Health Administration (MSHA) sponsored information collection request (ICR) titled, ''Hazard Communication,'' to the Office of Management and Budget (OMB) for review and approval for continued use in accordance with the Paperwork Reduction Act (PRA) of 1995 (44 U.S.C. 3501 *et seq.*).

DATES: Submit comments on or before September 30, 2011.

ADDRESSES: A copy of this ICR with applicable supporting documentation; including a description of the likely respondents, proposed frequency of response, and estimated total burden may be obtained from the RegInfo.gov Web site, *http://www.reginfo.gov/public/do/PRAMain*, on the day following publication of this notice or by contacting Michel Smyth by telephone at 202–693–4129 (this is not a toll-free number) or sending an e-mail to *DOL_PRA_PUBLIC@dol.gov.*

Submit comments about this request to the Office of Information and Regulatory Affairs, Attn: OMB Desk Officer for the U.S. Department of Labor, Mine Safety and Health Administration (MSHA), Office of Management and Budget, Room 10235, Washington, DC 20503, Telephone: 202–395–6929/Fax: 202–395–6881 (these are not toll-free numbers), e-mail: *OIRA_submission@omb.eop.gov.*

FOR FURTHER INFORMATION CONTACT: Contact Michel Smyth by telephone at 202–693–4129 (this is not a toll-free number) or by e-mail at *DOL_PRA_PUBLIC@dol.gov.*

SUPPLEMENTARY INFORMATION: The Hazard Communication Standard requires mine operators to use labels or other forms of warning necessary to inform miners of all hazards to which they are exposed, relevant symptoms and emergency treatment, and proper conditions of safety use or exposure.

This information collection is subject to the PRA. A Federal agency generally cannot conduct or sponsor a collection of information, and the public is generally not required to respond to an information collection, unless it is approved by the OMB under the PRA and displays a currently valid OMB Control Number. In addition, notwithstanding any other provisions of law, no person shall generally be subject to penalty for failing to comply with a collection of information if the collection of information does not display a valid OMB Control Number. *See* 5 CFR 1320.5(a) and 1320.6. The DOL obtains OMB approval for this information collection under OMB Control Number 1219–0133. The current OMB approval is scheduled to expire on August 31, 2011; however, it should be noted that information collections submitted to the OMB receive a month-to-month extension while they undergo review. For additional information, see the related notice published in the **Federal Register** on April 15, 2011 (76 FR 21410).

Interested parties are encouraged to send comments to the OMB, Office of Information and Regulatory Affairs at the address shown in the **ADDRESSES** section within 30 days of publication of this notice in the **Federal Register**. In order to help ensure appropriate consideration, comments should reference OMB Control Number 1219–0133. The OMB is particularly interested in comments that:

- Evaluate whether the proposed collection of information is necessary for the proper performance of the functions of the agency, including whether the information will have practical utility;
- Evaluate the accuracy of the agency's estimate of the burden of the proposed collection of information, including the validity of the methodology and assumptions used;
- Enhance the quality, utility, and clarity of the information to be collected; and
- Minimize the burden of the collection of information on those who are to respond, including through the use of appropriate automated, electronic, mechanical, or other technological collection techniques or other forms of information technology, *e.g.,* permitting electronic submission of responses.

Agency: Mine Safety and Health Administration (MSHA).

Title of Collection: Hazard Communication.

OMB Control Number: 1219–0133.

Affected Public: Private Sector—Businesses or other for-profits.

Total Estimated Number of Respondents: 22,381.

Total Estimated Number of Responses: 813,753.

Total Estimated Annual Burden Hours: 177,668.

Total Estimated Annual Other Costs Burden: $13,199.

Dated: August 25, 2011.

Michel Smyth,

Departmental Clearance Officer.

[FR Doc. 2011–22293 Filed 8–30–11; 8:45 am]

BILLING CODE 4510–43–P

DEPARTMENT OF LABOR

Office of the Secretary

Agency Information Collection Activities; Submission for OMB Review; Comment Request; Consent To Receive Employee Benefit Plan Disclosures Electronically

ACTION: Notice.

SUMMARY: The Department of Labor (DOL) is submitting the Employee Benefits Security Administration (EBSA) sponsored information collection request (ICR) titled, ''Consent To Receive Employee Benefit Plan Disclosures Electronically,'' to the Office of Management and Budget (OMB) for review and approval for continued use in accordance with the Paperwork Reduction Act (PRA) of 1995 (44 U.S.C. 3501 *et seq.*).

DATES: Submit comments on or before September 30, 2011.

ADDRESSES: A copy of this ICR with applicable supporting documentation; including a description of the likely respondents, proposed frequency of response, and estimated total burden may be obtained from the RegInfo.gov Web site, *http://www.reginfo.gov/public/do/PRAMain,* on the day following publication of this notice or by contacting Michel Smyth by telephone at 202–693–4129 (this is not a toll-free number) or sending an e-mail to *DOL_PRA_PUBLIC@dol.gov.*

Submit comments about this request to the Office of Information and Regulatory Affairs, Attn: OMB Desk Officer for the U.S. Department of Labor, Employee Benefits Security Administration (EBSA), Office of Management and Budget, Room 10235, Washington, DC 20503, Telephone: 202–395–6929/Fax: 202–395–6881 (these are not toll-free numbers), e-mail: *OIRA_submission@omb.eop.gov.*

FOR FURTHER INFORMATION CONTACT: Contact Michel Smyth by telephone at 202–693–4129 (this is not a toll-free number) or by e-mail at *DOL_PRA_PUBLIC@dol.gov.*

SUPPLEMENTARY INFORMATION: Regulations at 29 CFR 2520.104b–1 and 2520.107–1 govern the use of electronic technologies to satisfy information disclosure and recordkeeping requirements under Title I of the Employee Retirement Income Security Act of 1974, as amended (ERISA). Generally, consent is required to be obtained prior to providing disclosures electronically to participants and beneficiaries at a location other than the workplace.

Obtaining such consent in an information collection is subject to the PRA. A Federal agency generally cannot conduct or sponsor a collection of information, and the public is generally not required to respond to an information collection, unless it is approved by the OMB under the PRA and displays a currently valid OMB Control Number. In addition, notwithstanding any other provisions of law, no person shall generally be subject to penalty for failing to comply with a collection of information if the collection of information does not display a valid OMB Control Number. *See* 5 CFR 1320.5(a) and 1320.6. The DOL obtains OMB approval for this information collection under OMB Control Number 1210–0121. The current OMB approval is scheduled to expire on August 31, 2011; however, it should be noted that existing information collection requirements submitted to the OMB receive a month-to-month extension while they undergo review. For additional information, see the related notice published in the **Federal Register** on May 24, 2011 (76 FR 30,199).

Interested parties are encouraged to send comments to the OMB, Office of Information and Regulatory Affairs at the address shown in the **ADDRESSES** section within 30 days of publication of this notice in the **Federal Register**. In order to help ensure appropriate consideration, comments should reference OMB Control Number 1210–0121. The OMB is particularly interested in comments that:

- Evaluate whether the proposed collection of information is necessary for the proper performance of the functions of the agency, including whether the information will have practical utility;
- Evaluate the accuracy of the agency's estimate of the burden of the proposed collection of information, including the validity of the methodology and assumptions used;
- Enhance the quality, utility, and clarity of the information to be collected; and
- Minimize the burden of the collection of information on those who are to respond, including through the use of appropriate automated, electronic, mechanical, or other technological collection techniques or other forms of information technology, *e.g.,* permitting electronic submission of responses.

Agency: Employee Benefits Security Administration.

Title of Collection: Consent to Receive Employee Benefit Plan Disclosures Electronically.

OMB Control Number: 1210–0121.

Affected Public: Private sector—businesses or other for-profits.

Total Estimated Number of Respondents: 37,086.

Total Estimated Number of Responses: 3,176,585.

Total Estimated Annual Burden Hours: 15,453.

Total Estimated Annual Other Costs Burden: $158,829.

Dated: August 25, 2011.

Michel Smyth,

Departmental Clearance Officer.

[FR Doc. 2011–22309 Filed 8–30–11; 8:45 am]

BILLING CODE 4510–29–P

LEGAL SERVICES CORPORATION

Request for Comments—Fiscal Oversight Task Force Report and Recommendations

AGENCY: Legal Services Corporation.

ACTION: Request for comments.

SUMMARY: The Legal Services Corporation (''LSC'') Board of Directors (''Board'') seeks public comment on the July 28, 2011 Report of the Fiscal Oversight Task Force, which reviewed and made recommendations regarding how LSC conducts fiscal oversight of its grantees.

DATES: Written comments will be accepted for thirty (30) days from that date of this publication.

ADDRESSES: Written comments may be submitted by mail, fax, or e-mail to Rebecca D. Weir, Assistant General Counsel, Legal Services Corporation, 3333 K Street, NW., Washington, DC 20007; 202.295.1618 (phone); 202.337.6519 (fax); *rweir@lsc.gov.* Comments may also be submitted online at *http://www.lsc.gov/about/mattersforcomment.php.*

FOR FURTHER INFORMATION CONTACT: Rebecca D. Weir, Assistant General Counsel, Legal Services Corporation, 3333 K Street, NW., Washington, DC 20007; 202.295.1618 (phone); 202.337.6519 (fax); *rweir@lsc.gov.*

SUPPLEMENTARY INFORMATION: LSC was established by the United States Congress ''for the purpose of providing financial support for legal assistance in

noncriminal matters or proceedings to persons financially unable to afford such assistance.'' 42 U.S.C. 2996b(a). LSC performs this function by awarding grants to legal aid programs that provide civil legal services to low-income persons throughout the United States and its possessions and territories.

By Resolution adopted on July 21, 2010, the Board established the Fiscal Oversight Task Force (''FOTF''), comprised of seventeen distinguished professionals, ''to undertake a review of and make recommendations to the Board regarding LSC's fiscal oversight * * * of its grantees.'' On August 1, 2011, the FOTF presented a report of its findings and recommendations, *Fiscal Oversight Task Force Report to the Board of Directors* (July 28, 2011) (''FOTF Report''), to the Board at a briefing held for that purpose. The Board subsequently directed LSC Management to publish the FOTF Report in the **Federal Register** for a 30-day public comment period.

The FOTF Report can be found at *http://www.lsc.gov/pdfs/FiscalOversightTaskForceFINALReport.PDF*. Interested parties are encouraged to submit comments on the FOTF Report, especially with regard to its recommendations, and may do so by mail, fax, or e-mail to Rebecca D. Weir, Assistant General Counsel, Legal Services Corporation, 3333 K Street, NW., Washington, DC 20007; 202.295.1618 (phone); 202.337.6519 (fax); *rweir@lsc.gov*. Comments may also be submitted online at *http://www.lsc.gov/about/mattersforcomment.php*. Comments will be accepted for a period of 30 days from the date of publication of this notice. The Board anticipates meeting in October of 2011 to consider the FOTF Report and any public comments received.

Notice: LSC will post any comments received at *http://www.lsc.gov*. Such comments are also subject to disclosure under FOIA. Personally identifiable information such as phone numbers and addresses may be redacted upon request.

Dated: August 25, 2011.

Victor M. Fortuno,

Vice President and General Counsel.

[FR Doc. 2011–22215 Filed 8–30–11; 8:45 am]

BILLING CODE 7050–01–P

NUCLEAR REGULATORY COMMISSION

[NRC–2011–0185]

Virginia Electric and Power Company, Docket Nos. 50–338 and 50–339, North Anna Power Station, Unit Nos. 1 and 2, Docket Nos. 50–280 and 50–281, Surry Power Station, Unit Nos. 1 and 2; Environmental Assessment and Finding of No Significant Impact

The U.S. Nuclear Regulatory Commission (NRC) is considering issuance of an exemption from Title 10 of the *Code of Federal Regulations* (10 CFR) part 26, ''Fitness for Duty Programs,'' for Facility Operating License Nos. NPF–4 and NPF–7, issued to Virginia Electric Power Company (the licensee), for operation of the North Anna Power Station (NAPS) Unit Nos. 1 and 2, located in Louisa County, Virginia; and Facility Operating License Nos. DPR–32 and DPR–37, issued to the licensee, for operation of the Surry Power Station, Unit Nos. 1 and 2, located in Surry County, Virginia. Therefore, as required by 10 CFR 51.21, the NRC performed an environmental assessment. Based on the results of the environmental assessment, the NRC is issuing a finding of no significant impact.

Environmental Assessment

Identification of the Proposed Action

The proposed action would provide exemption from the work hour control requirements of 10 CFR 26.205(c) and (d) during declarations of severe weather conditions involving tropical storm or hurricane force winds.

The proposed action is in accordance with the licensee's application dated February 10, 2011 (Agencywide Documents Access and Management System (ADAMS) Accession No. ML110450583), as supplemented by letters dated March 10, 2011 (ADAMS Accession No. ML110740442) and May 26, 2011 (ADAMS Accession No. ML111470265).

The Need for the Proposed Action

The proposed action extends the exception provided by 10 CFR 26.207(d) to include pre-defined entry and exit conditions related to hurricane events because the sequestering of plant personnel and related staff resource limitations may occur at times prior to and following the current entry and exit conditions (*i.e.,* emergency declaration) specified in 10 CFR 26.207(d). Entry into a severe weather situation involving tropical storm or hurricane force winds can impose conditions similar to entry into the site emergency plan where the imposition of work hour controls on vital personnel could impede the ability to focus on plant safety and security, and may be detrimental to the health and safety of the public.

Environmental Impacts of the Proposed Action

The NRC has completed its environmental assessment of the proposed action and concludes that extending the exception provided by 10 CFR 26.207(d) to include pre-defined entry and exit conditions related to hurricane events would not significantly affect plant safety, as it does not change the Technical Specification-required shift staffing. Additionally, the time from entry into the condition in which the work hour control exemption applies, to exiting the condition, is limited to severe weather situations involving tropical storm or hurricane force winds. The licensee states that the Hurricane Response Plan (Nuclear) and other plant-specific procedures ensure that adequate resources and guidance are in place to prepare for, respond to, and recover from severe weather conditions associated with tropical storm or hurricane force winds.

The proposed action will not significantly increase the probability or consequences of accidents. The proposed action would not result in an increased radiological hazard beyond those previously analyzed in the Final Safety Analysis Report. No changes are being made in the types of effluents that may be released offsite. There is no significant increase in the amount of any effluent released offsite. There is no significant increase in occupational or public radiation exposure. No changes will be made to plant buildings or site property. Therefore, there are no significant radiological environmental impacts associated with the proposed action.

The proposed action does not result in changes to land use or water use, or result in changes to the quality or quantity of non-radiological effluents. No changes to the National Pollution Discharge Elimination System permits are needed. No effects on the aquatic or terrestrial habitat in the vicinity of the plant, or to threatened, endangered, or protected species under the Endangered Species Act, or impacts to fish habitat covered by the Magnusen-Stevens Act are expected. There are no impacts to the air or ambient air quality. There are no impacts to historical or cultural resources. There would be no noticeable effect on socioeconomic conditions in the region. Therefore, no changes or

different types of non-radiological environmental impacts are proposed as a result of the proposed action.

Accordingly, the NRC concludes that there are no significant environmental impacts associated with the proposed action.

Environmental Impacts of the Alternatives to the Proposed Action

As an alternative to the proposed action, the staff considered denial of the proposed action (*i.e.,* the ''no-action'' alternative). Denial of the application would result in no change in current environmental impacts. Other alternatives to the proposed action include entry and exit conditions, other than those proposed by the licensee, which would change the duration in which the exemption is effective. The staff concludes that these alternatives would not have a significant impact. The environmental impacts of the proposed action and the alternative actions are similar.

Alternative Use of Resources

The action does not involve the use of any different resources than those previously considered in the ''Final Environmental Statement Related to the Continuation of Construction and the Operation'' for NAPS dated April 1973, and Surry dated May 1972 and June 1972, respectively, as supplemented through NUREG–1437, ''Generic Environmental Impact Statement for License Renewal of Nuclear Plants,'' Supplements 6 and 7, dated November 2002.

Agencies and Persons Consulted

In accordance with its stated policy, on May 12, 2011, the staff consulted with the Virginia State official, Leslie Foldesi of the Department of Health, regarding the environmental impact of the proposed action. The State official had no comments.

Finding of No Significant Impact

On the basis of the environmental assessment, the NRC concludes that the proposed action will not have a significant effect on the quality of the human environment. Accordingly, the NRC has determined not to prepare an environmental impact statement for the proposed action.

For further details with respect to the proposed action, see the licensee's letter dated February 10, 2011, as supplemented by letters dated March 10 and May 26, 2011. Documents may be examined, and/or copied for a fee, at the NRC's Public Document Room (PDR), located at One White Flint North, Public File Area O1 F21, 11555 Rockville Pike (first floor), Rockville, Maryland. Publicly available documents created or received at the NRC in the Agencywide Documents Access and Management System (ADAMS) are available online in the NRC Library at *http://www.nrc.gov/reading-rm/adams.html*. Persons who do not have access to ADAMS or who encounter problems in accessing the documents located in ADAMS should contact the NRC PDR Reference staff by telephone at 1–800–397–4209 or 301–415–4737, or send an e-mail to *pdr.resource@nrc.gov*.

Dated at Rockville, Maryland, this 25th day of August 2011.

For the Nuclear Regulatory Commission.

Robert E. Martin,

Senior Project Manager, Plant Licensing Branch II–1, Division of Operating Reactor Licensing, Office of Nuclear Reactor Regulation.

[FR Doc. 2011–22282 Filed 8–30–11; 8:45 am]

BILLING CODE 7590–01–P

NUCLEAR REGULATORY COMMISSION

[Docket Nos. 50–245, 50–336, and 50–423; NRC–2011–0202]

Dominion Nuclear Connecticut, Inc., Millstone Power Station, Unit Nos. 1, 2, and 3; Environmental Assessment and Finding of No Significant Impact

The U.S. Nuclear Regulatory Commission (NRC) is considering issuance of an exemption from Title 10 of the *Code of Federal Regulations* (10 CFR) Part 26, ''Fitness for Duty Programs,'' for Facility Operating License Nos. DPR–21, DPR–65, and NPF–49, issued to Dominion Nuclear Connecticut, Inc. (the licensee), for operation of the Millstone Power Station Unit Nos. 1, 2, and 3, located in New London County, Connecticut. Therefore, as required by 10 CFR 51.21, the NRC performed an environmental assessment. Based on the results of the environmental assessment, the NRC is issuing a finding of no significant impact.

Environmental Assessment

Identification of the Proposed Action

The proposed action would provide exemption from the work hour control requirements of 10 CFR 26.205(c) and (d) during declarations of severe weather conditions involving tropical storm or hurricane force winds.

The proposed action is in accordance with the licensee's application dated February 10, 2011 (Agencywide Documents Access and Management System (ADAMS) Accession No. ML110450583), as supplemented by letter dated March 10, 2011 (ADAMS Accession No. ML110740442).

The Need for the Proposed Action

The proposed action extends the exception provided by 10 CFR 26.207(d) to include pre-defined entry and exit conditions related to hurricane events because the sequestering of plant personnel and related staff resource limitations may occur at times prior to and following the current entry and exit conditions (i.e., emergency declaration) specified in 10 CFR 26.207(d). Entry into a severe weather situation involving tropical storm or hurricane force winds can impose conditions similar to entry into the site emergency plan where the imposition of work hour controls on vital personnel could impede the ability to focus on plant safety and security, and may be detrimental to the health and safety of the public.

Environmental Impacts of the Proposed Action

The NRC has completed its environmental assessment of the proposed action and concludes that extending the exception provided by 10 CFR 26.207(d) to include pre-defined entry and exit conditions related to hurricane events would not significantly affect plant safety, as it does not change the Technical Specification-required shift staffing. Additionally, the time from entry into the condition in which the work hour control exemption applies, to exiting the condition, is limited to severe weather situations involving tropical storm or hurricane force winds. The licensee states that the Hurricane Response Plan (Nuclear) and other plant-specific procedures ensure that adequate resources and guidance are in place to prepare for, respond to, and recover from severe weather conditions associated with tropical storm or hurricane force winds.

The proposed action will not significantly increase the probability or consequences of accidents. The proposed action would not result in an increased radiological hazard beyond those previously analyzed in the Final Safety Analysis Report. No changes are being made in the types of effluents that may be released offsite. There is no significant increase in the amount of any effluent released offsite. There is no significant increase in occupational or public radiation exposure. No changes will be made to plant buildings or site property. Therefore, there are no significant radiological environmental impacts associated with the proposed action.

The proposed action does not result in changes to land use or water use, or result in changes to the quality or quantity of non-radiological effluents. No changes to the National Pollution Discharge Elimination System permits are needed. No effects on the aquatic or terrestrial habitat in the vicinity of the plant, or to threatened, endangered, or protected species under the Endangered Species Act, or impacts to fish habitat covered by the Magnuson-Stevens Act are expected. There are no impacts to the air or ambient air quality. There are no impacts to historical or cultural resources. There would be no noticeable effect on socioeconomic conditions in the region. Therefore, no changes or different types of non-radiological environmental impacts are expected as a result of the proposed action.

Accordingly, the NRC concludes that there are no significant environmental impacts associated with the proposed action.

Environmental Impacts of the Alternatives to the Proposed Action

As an alternative to the proposed action, the staff considered denial of the proposed action (i.e., the ''no-action'' alternative). Denial of the application would result in no change in current environmental impacts. Other alternatives to the proposed action include entry and exit conditions, other than those proposed by the licensee, which would change the duration in which the exemption is effective. The staff concludes that these alternatives would not have a significant impact. The environmental impacts of the proposed action and the alternative actions are similar.

Alternative Use of Resources

The action does not involve the use of any different resources than those previously considered in the U.S. Atomic Energy Commission's 1973 ''Final Environmental Statement Related to the Continuation of Construction of Unit 2 and the Operation of Units 1 and 2, Millstone Nuclear Power Station,'' the NRC's 1984 ''Final Environmental Statement related to operation of Millstone Nuclear Power Station, Unit No. 3,'' and NUREG–1437, ''Generic Environmental Impact Statement for License Renewal of Nuclear Plants,'' Supplement 22 regarding Millstone Power Station, Units 2 and 3.

Agencies and Persons Consulted

In accordance with its stated policy, on May 13, 2011, the staff consulted with the Connecticut State official, Michael Firsick of the Department of Environmental Protection, regarding the environmental impact of the proposed action. The State official had no comments.

Finding of No Significant Impact

On the basis of the environmental assessment, the NRC concludes that the proposed action will not have a significant effect on the quality of the human environment. Accordingly, the NRC has determined not to prepare an environmental impact statement for the proposed action.

For further details with respect to the proposed action, see the licensee's letter dated February 10, 2011, as supplemented by letter dated March 10, 2011. Documents may be examined, and/or copied for a fee, at the NRC's Public Document Room (PDR), located at One White Flint North, Public File Area O1 F21, 11555 Rockville Pike (first floor), Rockville, Maryland. Publicly available documents created or received at the NRC in Agencywide Documents Access and Management System (ADAMS) are available online in the NRC Library at *http://www.nrc.gov/reading-rm/adams.html.* Persons who do not have access to ADAMS or who encounter problems in accessing the documents located in ADAMS should contact the NRC PDR Reference staff by telephone at 1–800–397–4209 or 301–415–4737, or send an e-mail to *pdr.resource@nrc.gov.*

Dated at Rockville, Maryland, this 22nd day of August 2011.

For the Nuclear Regulatory Commission.

Carleen J. Sanders,

Project Manager, Plant Licensing Branch I–2, Division of Operating Reactor Licensing, Office of Nuclear Reactor Regulation.

[FR Doc. 2011–22280 Filed 8–30–11; 8:45 am]

BILLING CODE 7590–01–P

NUCLEAR REGULATORY COMMISSION

[Docket No. 50–261, 72–3 and 72–60; NRC–2011–0201]

Carolina Power & Light; H.B. Robinson Steam Electric Plant, Unit No. 2; HBRSEP Independent Spent Fuel Storage Installations; Notice of Consideration of Approval of Application for Indirect License Transfer Resulting From the Proposed Merger Between Progress Energy, Inc. and Duke Energy Corporation, and Opportunity for Hearing

AGENCY: Nuclear Regulatory Commission.

ACTION: Notice of request for indirect license transfer, opportunity to comment, opportunity to request a hearing.

DATES: Comments must be filed by September 30, 2011. A request for a hearing must be filed by September 20, 2011.

ADDRESSES: Please include Docket ID NRC–2011–0201 in the subject line of your comments. For additional instructions on submitting comments and instructions on accessing documents related to this action, see ''Submitting Comments and Accessing Information'' in the **SUPPLEMENTARY INFORMATION** section of this document. You may submit comments by any one of the following methods:

- *Federal Rulemaking Web Site:* Go to *http://www.regulations.gov* and search for documents filed under Docket ID NRC–2011–0201. Address questions about NRC dockets to Carol Gallagher, telephone: 301–492–3668; e-mail: *Carol.Gallagher@nrc.gov.*
- *Mail comments to:* Cindy Bladey, Chief, Rules, Announcements, and Directives Branch (RADB), Office of Administration, Mail Stop: TWB–05–B01M, U.S. Nuclear Regulatory Commission, Washington, DC 20555–0001.
- *Fax comments to:* RADB at 301–492–3446.

SUPPLEMENTARY INFORMATION:

Submitting Comments and Accessing Information

Comments submitted in writing or in electronic form will be posted on the NRC Web site and on the Federal rulemaking Web site, *http://www.regulations.gov.* Because your comments will not be edited to remove any identifying or contact information, the NRC cautions you against including any information in your submission that you do not want to be publicly disclosed.

The NRC requests that any party soliciting or aggregating comments received from other persons for submission to the NRC inform those persons that the NRC will not edit their comments to remove any identifying or contact information, and therefore, they should not include any information in their comments that they do not want publicly disclosed.

You can access publicly available documents related to this document using the following methods:

- *NRC's Public Document Room (PDR):* The public may examine and have copied, for a fee, publicly available documents at the NRC's PDR, O1–F21, One White Flint North, 11555 Rockville Pike, Rockville, Maryland 20852.

• *NRC's Agencywide Documents Access and Management System (ADAMS):* Publicly available documents created or received at the NRC are available online in the NRC Library at *http://www.nrc.gov/reading-rm/adams.html*. From this page, the public can gain entry into ADAMS, which provides text and image files of the NRC's public documents. If you do not have access to ADAMS or if there are problems in accessing the documents located in ADAMS, contact the NRC's PDR reference staff at 1–800–397–4209, 301–415–4737, or by e-mail to *pdr.resource@nrc.gov*. The application dated March 30, 2011, is available electronically under ADAMS Accession No. ML11110A031.

• *Federal Rulemaking Web Site:* Public comments and supporting materials related to this notice can be found at *http://www.regulations.gov* by searching on Docket ID NRC–2011–0201.

FOR FURTHER INFORMATION CONTACT: Farideh E. Saba, Senior Project Manager, Plant Licensing Branch 2–2, Division of Operating Reactor Licensing, Office of Nuclear Reactor Regulation, U.S. Nuclear Regulatory Commission, Washington, DC 20555. Telephone: 301–415–1447; fax number: 301–415–2102; e-mail: *Farideh.Saba@nrc.gov*.

The Commission is considering the issuance of an order under Title 10 of *August 31, 2011* (10 CFR) 50.80 and 72.50 approving the indirect transfer of the Renewed Facility Operating License No. DPR–23 for H.B. Robinson Steam Electric Plant (Robinson) Unit No. 2, including the Robinson Independent Spent Fuel Storage Installation (ISFSI), and the Robinson ISFSI with Renewed Material License No. SNM–2502, currently held by Carolina Power & Light Company, as owner and licensed operator.

According to the application for approval dated March 30, 2011, filed by Carolina Power & Light Company (CP&L, the licensee), Progress Energy, Inc. (Progress Energy, the licensee's current ultimate parent corporation) seeks approval pursuant to 10 CFR 50.80 for indirect transfer of control of Robinson 2, including the Robinson ISFSI, and pursuant to 10 CFR 72.50 for Robinson ISFSI, along with Brunswick Steam and Electric Plant (BSEP), Units 1 and 2, BSEP Independent Spent Fuel Storage Installation, Shearon Harris Nuclear Power Plant, Unit 1, and Crystal River Unit 3 Nuclear Generating Plant. Progress Energy would merge with Duke Energy Corporation (Duke Energy). The merged company would become the ultimate parent of the current licensee. CP&L will continue to own and operate the licensed facility in accordance with the Licenses.

According to the application, under the terms of the Merger Agreement, Diamond Acquisition Corporation (Merger Sub), a wholly owned direct subsidiary of Duke Energy, will merge with and into Progress Energy. Progress Energy will become a wholly owned direct subsidiary of Duke Energy and the former shareholders of Progress Energy will become shareholders of Duke Energy. The current licensee will remain a wholly owned subsidiary of Progress Energy and will continue to operate the Robinson facility.

According to the application, it is anticipated that Duke Energy shareholders will own approximately 63 percent of the combined company and Progress Energy shareholders will own approximately 37 percent of the combined company on a fully diluted basis.

According to the application, when the transaction is completed, Duke Energy will have an eighteen-member board of directors. All eleven current directors of Duke Energy will continue as directors when the transaction is complete, subject to their ability and willingness to serve. Progress Energy, after consultation with Duke Energy, designated seven of the current directors of Progress Energy to be added to the board of directors of Duke Energy when the transaction is complete, similarly subject to their ability and willingness to serve.

According to the application, the technical qualifications of the licensee are not affected by the proposed indirect transfers of control of the Robinson licenses. The current licensee will at all times remain the licensed operator of Robinson. No conforming amendments will be required to the facility operating license or the site-specific ISFSI license as a result of the proposed transaction. The nuclear operating organization for the licensed facility is expected to remain essentially unchanged as a result of the acquisition. Specifically, the proposed indirect transfers of control will not result in any change in the role of the CP&L as the licensed operator of the licensed facility and will not result in any changes to its financial qualifications, decommissioning funding assurance, or technical qualifications. CP&L will retain the requisite qualifications to own and operate the licensed facility.

No physical changes to the above listed facilities or operational changes are being proposed in the application.

Pursuant to 10 CFR 50.80, no license, or any right thereunder, shall be transferred, directly or indirectly, through transfer of control of the license, unless the Commission shall give its consent in writing. The Commission will approve an application for the indirect transfer of a license, if the Commission determines that the proposed merger will not affect the qualifications of the licensee to hold the license, and that the transfer is otherwise consistent with applicable provisions of law, regulations, and orders issued by the Commission pursuant thereto.

The filing of requests for hearing and petitions for leave to intervene, and written comments with regard to the license transfer application, are discussed below.

Within 20 days from the date of publication of this notice, any person(s) whose interest may be affected by the Commission's action on the application may request a hearing and intervention via electronic submission through the NRC E-Filing system. Requests for a hearing and petitions for leave to intervene should be filed in accordance with the Commission's rules of practice set forth in Subpart C ''Rules of General Applicability: Hearing Requests, Petitions to Intervene, Availability of Documents, Selection of Specific Hearing Procedures, Presiding Officer Powers, and General Hearing Management for NRC Adjudicatory Hearings,'' of 10 CFR Part 2. In particular, such requests and petitions must comply with the requirements set forth in 10 CFR 2.309. Untimely requests and petitions may be denied, as provided in 10 CFR 2.309(c)(1), unless good cause for failure to file on time is established. In addition, an untimely request or petition should address the factors that the Commission will also consider, in reviewing untimely requests or petitions, set forth in 10 CFR 2.309(c)(1)(i)–(viii). NRC regulations are accessible electronically from the NRC Library on the NRC Web site at *http://www.nrc.gov/reading-rm/doc-collections/cfr/*.

All documents filed in NRC adjudicatory proceedings, including a request for hearing, a petition for leave to intervene, any motion or other document filed in the proceeding prior to the submission of a request for hearing or petition to intervene, and documents filed by interested governmental entities participating under 10 CFR 2.315(c), must be filed in accordance with the NRC E-Filing rule (72 FR 49139, August 28, 2007). The E-Filing process requires participants to submit and serve all adjudicatory documents over the Internet, or in some cases to mail copies on electronic

storage media. Participants may not submit paper copies of their filings unless they seek an exemption in accordance with the procedures described below.

To comply with the procedural requirements of E-Filing, at least 10 days prior to the filing deadline, the participant should contact the Office of the Secretary by e-mail at *hearing.docket@nrc.gov*, or by telephone at 301–415–1677, to request (1) a digital ID certificate, which allows the participant (or its counsel or representative) to digitally sign documents and access the E-Submittal server for any proceeding in which it is participating; and (2) advise the Secretary that the participant will be submitting a request or petition for hearing (even in instances in which the participant, or its counsel or representative, already holds an NRC-issued digital ID certificate). Based upon this information, the Secretary will establish an electronic docket for the hearing in this proceeding if the Secretary has not already established an electronic docket.

Information about applying for a digital ID certificate is available on NRC's public Web site at *http://www.nrc.gov/site-help/e-submittals/apply-certificates.html.* System requirements for accessing the E-Submittal server are detailed in NRC's ''Guidance for Electronic Submission,'' which is available on the agency's public Web site at *http://www.nrc.gov/site-help/e-submittals.html.* Participants may attempt to use other software not listed on the Web site, but should note that the NRC's E-Filing system does not support unlisted software, and the NRC Meta System Help Desk will not be able to offer assistance in using unlisted software.

If a participant is electronically submitting a document to the NRC in accordance with the E-Filing rule, the participant must file the document using the NRC's online, Web-based submission form. In order to serve documents through Electronic Information Exchange, users will be required to install a Web browser plug-in from the NRC Web site. Further information on the Web-based submission form, including the installation of the Web browser plug-in, is available on the NRC's public Web site at *http://www.nrc.gov/site-help/e-submittals.html.*

Once a participant has obtained a digital ID certificate and a docket has been created, the participant can then submit a request for hearing or petition for leave to intervene. Submissions should be in Portable Document Format (PDF) in accordance with NRC guidance available on the NRC public Web site at *http://www.nrc.gov/site-help/e-submittals.html.* A filing is considered complete at the time the documents are submitted through the NRC's E-Filing system. To be timely, an electronic filing must be submitted to the E-Filing system no later than 11:59 p.m. Eastern Time on the due date. Upon receipt of a transmission, the E-Filing system time-stamps the document and sends the submitter an e-mail notice confirming receipt of the document. The E-Filing system also distributes an e-mail notice that provides access to the document to the NRC Office of the General Counsel and any others who have advised the Office of the Secretary that they wish to participate in the proceeding, so that the filer need not serve the documents on those participants separately. Therefore, applicants and other participants (or their counsel or representative) must apply for and receive a digital ID certificate before a hearing request/petition to intervene is filed so that they can obtain access to the document via the E-Filing system.

A person filing electronically using the agency's adjudicatory E-Filing system may seek assistance by contacting the NRC Meta System Help Desk through the ''Contact Us'' link located on the NRC Web site at *http://www.nrc.gov/site-help/e-submittals.html,* by e-mail at *MSHD.Resource@nrc.gov,* or by a toll-free call at 866–672–7640. The NRC Meta System Help Desk is available between 8 a.m. and 8 p.m., Eastern Time, Monday through Friday, excluding government holidays.

Participants who believe that they have a good cause for not submitting documents electronically must file an exemption request, in accordance with 10 CFR 2.302(g), with their initial paper filing requesting authorization to continue to submit documents in paper format. Such filings must be submitted by: (1) First class mail addressed to the Office of the Secretary of the Commission, U.S. Nuclear Regulatory Commission, Washington, DC 20555–0001, Attention: Rulemaking and Adjudications Staff; or (2) courier, express mail, or expedited delivery service to the Office of the Secretary, Sixteenth Floor, One White Flint North, 11555 Rockville Pike, Rockville, Maryland 20852, Attention: Rulemaking and Adjudications Staff. Participants filing a document in this manner are responsible for serving the document on all other participants. Filing is considered complete by first-class mail as of the time of deposit in the mail, or by courier, express mail, or expedited delivery service upon depositing the document with the provider of the service. A presiding officer, having granted an exemption request from using E-Filing, may require a participant or party to use E-Filing if the presiding officer subsequently determines that the reason for granting the exemption from use of E-Filing no longer exists.

Documents submitted in adjudicatory proceedings will appear in NRC's electronic hearing docket which is available to the public at *http://ehd1.nrc.gov/EHD/,* unless excluded pursuant to an order of the Commission, or the presiding officer. Participants are requested not to include personal privacy information, such as social security numbers, home addresses, or home phone numbers in their filings, unless an NRC regulation or other law requires submission of such information. With respect to copyrighted works, except for limited excerpts that serve the purpose of the adjudicatory filings and would constitute a Fair Use application, participants are requested not to include copyrighted materials in their submission.

Petitions for leave to intervene must be filed no later than 20 days from the date of publication of this notice. Non-timely filings will not be entertained absent a determination by the presiding officer that the petition or request should be granted or the contentions should be admitted, based on a balancing of the factors specified in 10 CFR 2.309(c)(1)(i)–(viii).

The Commission will issue a notice or order granting or denying a hearing request or intervention petition, designating the issues for any hearing that will be held and designating the Presiding Officer. A notice granting a hearing will be published in the **Federal Register** and served on the parties to the hearing.

Within 30 days from the date of publication of this notice, persons may submit written comments regarding the license transfer application, as provided for in 10 CFR 2.1305. The Commission will consider and, if appropriate, respond to these comments, but such comments will not otherwise constitute part of the decisional record. Comments should be submitted to the Secretary, U.S. Nuclear Regulatory Commission, Washington, DC 20555–0001, Attention: Rulemakings and Adjudications Staff, and should cite the publication date and page number of this **Federal Register** notice.

For further details with respect to this license transfer application, see the application dated March 30, 2011,

available for public inspection at the Commission's Public Document Room (PDR), located at One White Flint North, Public File Area O1 F21, 11555 Rockville Pike (first floor), Rockville, Maryland. Publicly available documents created or received at the NRC are accessible electronically through ADAMS in the NRC Library at *http://www.nrc.gov/reading-rm/adams.html.* Persons who do not have access to ADAMS or who encounter problems in accessing the documents located in ADAMS should contact the NRC PDR Reference staff by telephone at 1–800–397–4209, or 301–415–4737 or by e-mail to *pdr.resource@nrc.gov.*

Dated at Rockville, Maryland this 22nd day of August 2011.

For the Nuclear Regulatory Commission.

Farideh E. Saba,

Senior Project Manager, Plant Licensing Branch 2–2, Division of Operating Reactor Licensing, Office of Nuclear Reactor Regulation.

[FR Doc. 2011–22279 Filed 8–30–11; 8:45 am]

BILLING CODE 7590–01–P

POSTAL REGULATORY COMMISSION

[Docket No. A2011–54; Order No. 827]

Post Office Closing

AGENCY: Postal Regulatory Commission.

ACTION: Notice.

SUMMARY: This document informs the public that an appeal of the closing of the Enloe, Texas post office has been filed. It identifies preliminary steps and provides a procedural schedule. Publication of this document will allow the Postal Service, petitioners, and others to take appropriate action.

DATES: *Administrative record due (from Postal Service*): September 8, 2011; *deadline for notices to intervene:* September 19, 2011. *See* the Procedural Schedule in the **SUPPLEMENTARY INFORMATION** section for other dates of interest.

ADDRESSES: Submit comments electronically by accessing the ''Filing Online'' link in the banner at the top of the Commission's Web site (*http://www.prc.gov*) or by directly accessing the Commission's Filing Online system at *https://www.prc.gov/prc-pages/filing-online/login.aspx.* Commenters who cannot submit their views electronically should contact the person identified in the **FOR FURTHER INFORMATION CONTACT** section as the source for case-related information for advice on alternatives to electronic filing.

FOR FURTHER INFORMATION CONTACT: Stephen L. Sharfman, General Counsel, at 202–789–6820 (case-related information) or *DocketAdmins@prc.gov* (electronic filing assistance).

SUPPLEMENTARY INFORMATION: Notice is hereby given that, pursuant to 39 U.S.C. 404(d), on August 24, 2011, the Commission received two petitions for review of the Postal Service's determination to close the Enloe post office in Enloe, Texas. The petitions were filed by Deloris Gillean, and Jerry and Susan Carrington (Petitioners). They are both postmarked August 15, 2011. The Commission hereby institutes a proceeding under 39 U.S.C. 404(d)(5) and establishes Docket No. A2011–54 to consider Petitioners' appeals. If Petitioners would like to further explain their position with supplemental information or facts, Petitioners may either file a Participant Statement on PRC Form 61 or file a brief with the Commission no later than September 28, 2011.

Categories of issues apparently raised. Petitioners contend that: (1) the Postal Service failed to consider the effect of the closing on the community (*see* 39 U.S.C. 404(d)(2)(A)(i)); and (2) the Postal Service failed to adequately consider the economic savings resulting from the closure (*see* 39 U.S.C. 404(d)(2)(A)(iv)).

After the Postal Service files the administrative record and the Commission reviews it, the Commission may find that there are more legal issues than the one set forth above, or that the Postal Service's determination disposes of one or more of those issues. The deadline for the Postal Service to file the applicable administrative record with the Commission is September 8, 2011. *See* 39 CFR 3001.113. In addition, the due date for any responsive pleading by the Postal Service to this Notice is September 8, 2011.

Availability; Web site posting. The Commission has posted the appeal and supporting material on its Web site at *http://www.prc.gov.* Additional filings in this case and participants' submissions also will be posted on the Commission's Web site, if provided in electronic format or amenable to conversion, and not subject to a valid protective order. Information on how to use the Commission's Web site is available online or by contacting the Commission's webmaster via telephone at 202–789–6873 or via electronic mail at *prc-webmaster@prc.gov.*

The appeal and all related documents are also available for public inspection in the Commission's docket section. Docket section hours are 8 a.m. to 4:30 p.m., eastern time, Monday through Friday, except on Federal government holidays. Docket section personnel may be contacted via electronic mail at *prc-dockets@prc.gov* or via telephone at 202–789–6846.

Filing of documents. All filings of documents in this case shall be made using the Internet (Filing Online) pursuant to Commission rules 9(a) and 10(a) at the Commission's Web site, *http://www.prc.gov,* unless a waiver is obtained. *See* 39 CFR 3001.9(a) and 3001.10(a). Instructions for obtaining an account to file documents online may be found on the Commission's Web site or by contacting the Commission's docket section at *prc-dockets@prc.gov* or via telephone at 202–789–6846.

The Commission reserves the right to redact personal information which may infringe on an individual's privacy rights from documents filed in this proceeding.

Intervention. Persons, other than Petitioners and respondent, wishing to be heard in this matter are directed to file a notice of intervention. *See* 39 CFR 3001.111(b). Notices of intervention in this case are to be filed on or before September 19, 2011. A notice of intervention shall be filed using the Internet (Filing Online) at the Commission's Web site unless a waiver is obtained for hardcopy filing. *See* 39 CFR 3001.9(a) and 3001.10(a).

Further procedures. By statute, the Commission is required to issue its decision within 120 days from the date it receives the appeal. *See* 39 U.S.C. 404(d)(5). A procedural schedule has been developed to accommodate this statutory deadline. In the interest of expedition, in light of the 120-day decision schedule, the Commission may request the Postal Service or other participants to submit information or memoranda of law on any appropriate issue. As required by the Commission rules, if any motions are filed, responses are due 7 days after any such motion is filed. *See* 39 CFR 3001.21.

It is ordered:

1. The Postal Service shall file the applicable administrative record regarding this appeal no later than September 8, 2011.

2. Any responsive pleading by the Postal Service to this notice is due no later than September 8, 2011.

3. The procedural schedule listed below is hereby adopted.

4. Pursuant to 39 U.S.C. 505, Cassandra L. Hicks is designated officer of the Commission (Public

Representative) to represent the interests of the general public.

5. The Secretary shall arrange for publication of this notice and order in the **Federal Register**.

By the Commission.

Shoshana M. Grove,

Secretary.

PROCEDURAL SCHEDULE

August 24, 2011	Filing of Appeal.
September 8, 2011	Deadline for the Postal Service to file the applicable administrative record in this appeal.
September 8, 2011	Deadline for the Postal Service to file any responsive pleading.
September 19, 2011	Deadline for notices to intervene (*see* 39 CFR 3001.111(b)).
September 28, 2011	Deadline for Petitioner's Form 61 or initial brief in support of petition (*see* 39 CFR 3001.115(a) and (b)).
October 18, 2011	Deadline for answering brief in support of the Postal Service (*see* 39 CFR 3001.115(c)).
November 2, 2011	Deadline for reply briefs in response to answering briefs (*see* 39 CFR 3001.115(d)).
November 9, 2011	Deadline for motions by any party requesting oral argument; the Commission will schedule oral argument only when it is a necessary addition to the written filings (*see* 39 CFR 3001.116).
December 13, 2011	Expiration of the Commission's 120-day decisional schedule (*see* 39 U.S.C. 404(d)(5)).

[FR Doc. 2011–22271 Filed 8–30–11; 8:45 am]

BILLING CODE 7710–FW–P

POSTAL REGULATORY COMMISSION

[Docket No. A2011–53; Order No. 826]

Post Office Closing

AGENCY: Postal Regulatory Commission.

ACTION: Notice.

SUMMARY: This document informs the public that an appeal of the closing of the West Elkton, Ohio post office has been filed. It identifies preliminary steps and provides a procedural schedule. Publication of this document will allow the Postal Service, petitioners, and others to take appropriate action.

DATES: *Administrative record due (from Postal Service*): September 7, 2011; *deadline for notices to intervene:* September 19, 2011. *See* the Procedural Schedule in the **SUPPLEMENTARY INFORMATION** section for other dates of interest.

ADDRESSES: Submit comments electronically by accessing the ''Filing Online'' link in the banner at the top of the Commission's Web site (*http://www.prc.gov*) or by directly accessing the Commission's Filing Online system at *https://www.prc.gov/prc-pages/filing-online/login.aspx.* Commenters who cannot submit their views electronically should contact the person identified in the **FOR FURTHER INFORMATION CONTACT** section as the source for case-related information for advice on alternatives to electronic filing.

FOR FURTHER INFORMATION CONTACT: Stephen L. Sharfman, General Counsel, at 202–789–6820 (case-related information) or *DocketAdmins@prc.gov* (electronic filing assistance).

SUPPLEMENTARY INFORMATION: Notice is hereby given that, pursuant to 39 U.S.C. 404(d), on August 23, 2011, the Commission received three petitions for review of the Postal Service's determination to close the West Elkton post office in West Elkton, Ohio. The petitions were filed by John and Sandra Prater, Richard Bair on behalf of the Gratis Township Trustees, and Jessica Compston (Petitioners). The earliest postmark date is August 13, 2011. The Commission hereby institutes a proceeding under 39 U.S.C. 404(d)(5) and establishes Docket No. A2011–53 to consider Petitioners' appeals. If Petitioners would like to further explain their position with supplemental information or facts, Petitioners may either file a Participant Statement on PRC Form 61 or file a brief with the Commission no later than September 27, 2011.

Categories of issues apparently raised. Petitioners contend that: (1) The Postal Service failed to consider the effect of the closing on the community (*see* 39 U.S.C. 404(d)(2)(A)(i)); and (2) the Postal Service failed to consider whether or not it will continue to provide a maximum degree of effective and regular postal services to the community (*see* 39 U.S.C. 404(d)(2)(A)(iii)).

After the Postal Service files the administrative record and the Commission reviews it, the Commission may find that there are more legal issues than the one set forth above, or that the Postal Service's determination disposes of one or more of those issues. The deadline for the Postal Service to file the applicable administrative record with the Commission is September 7, 2011. *See* 39 CFR 3001.113. In addition, the due date for any responsive pleading by the Postal Service to this Notice is September 7, 2011.

Availability; Web site posting. The Commission has posted the appeal and supporting material on its Web site at *http://www.prc.gov.* Additional filings in this case and participants' submissions also will be posted on the Commission's Web site, if provided in electronic format or amenable to conversion, and not subject to a valid protective order. Information on how to use the Commission's Web site is available online or by contacting the Commission's webmaster via telephone at 202–789–6873 or via electronic mail at *prc-webmaster@prc.gov.*

The appeal and all related documents are also available for public inspection in the Commission's docket section. Docket section hours are 8 a.m. to 4:30 p.m., eastern time, Monday through Friday, except on Federal government holidays. Docket section personnel may be contacted via electronic mail at *prc-dockets@prc.gov* or via telephone at 202–789–6846.

Filing of documents. All filings of documents in this case shall be made using the Internet (Filing Online) pursuant to Commission rules 9(a) and 10(a) at the Commission's Web site, *http://www.prc.gov,* unless a waiver is obtained. *See* 39 CFR 3001.9(a) and 3001.10(a). Instructions for obtaining an account to file documents online may be found on the Commission's Web site or by contacting the Commission's docket section at *prc-dockets@prc.gov* or via telephone at 202–789–6846.

The Commission reserves the right to redact personal information which may infringe on an individual's privacy rights from documents filed in this proceeding.

Intervention. Persons, other than Petitioners and respondent, wishing to be heard in this matter are directed to file a notice of intervention. *See* 39 CFR 3001.111(b). Notices of intervention in this case are to be filed on or before September 19, 2011. A notice of intervention shall be filed using the Internet (Filing Online) at the Commission's Web site unless a waiver

is obtained for hardcopy filing. *See* 39 CFR 3001.9(a) and 3001.10(a).

Further procedures. By statute, the Commission is required to issue its decision within 120 days from the date it receives the appeal. *See* 39 U.S.C. 404(d)(5). A procedural schedule has been developed to accommodate this statutory deadline. In the interest of expedition, in light of the 120-day decision schedule, the Commission may request the Postal Service or other participants to submit information or memoranda of law on any appropriate issue. As required by the Commission rules, if any motions are filed, responses are due 7 days after any such motion is filed. *See* 39 CFR 3001.21.

It is ordered:

1. The Postal Service shall file the applicable administrative record regarding this appeal no later than September 7, 2011.

2. Any responsive pleading by the Postal Service to this notice is due no later than September 7, 2011.

3. The procedural schedule listed below is hereby adopted.

4. Pursuant to 39 U.S.C. 505, Cassandra L. Hicks is designated officer of the Commission (Public Representative) to represent the interests of the general public.

5. The Secretary shall arrange for publication of this notice and order in the **Federal Register**.

By the Commission.

Shoshana M. Grove,

Secretary.

PROCEDURAL SCHEDULE

August 23, 2011	Filing of Appeal.
September 7, 2011	Deadline for the Postal Service to file the applicable administrative record in this appeal.
September 7, 2011	Deadline for the Postal Service to file any responsive pleading.
September 19, 2011	Deadline for notices to intervene (*see* 39 CFR 3001.111(b)).
September 27, 2011	Deadline for Petitioner's Form 61 or initial brief in support of petition (*see* 39 CFR 3001.115(a) and (b)).
October 17, 2011	Deadline for answering brief in support of the Postal Service (*see* 39 CFR 3001.115(c)).
November 1, 2011	Deadline for reply briefs in response to answering briefs (*see* 39 CFR 3001.115(d)).
November 8, 2011	Deadline for motions by any party requesting oral argument; the Commission will schedule oral argument only when it is a necessary addition to the written filings (*see* 39 CFR 3001.116).
December 12, 2011	Expiration of the Commission's 120-day decisional schedule (*see* 39 U.S.C. 404(d)(5)).

[FR Doc. 2011–22273 Filed 8–30–11; 8:45 am]

BILLING CODE 7710–FW–P

POSTAL REGULATORY COMMISSION

Docket No. A2011–51; Order No. 824]

Post Office Closing

AGENCY: Postal Regulatory Commission.

ACTION: Notice.

SUMMARY: This document informs the public that an appeal of the closing of the Leonardsville, New York post office has been filed. It identifies preliminary steps and provides a procedural schedule. Publication of this document will allow the Postal Service, petitioners, and others to take appropriate action.

DATES: *Administrative record due (from Postal Service*): September 6, 2011; *deadline for notices to intervene:* September 19, 2011. *See* the Procedural Schedule in the **SUPPLEMENTARY INFORMATION** section for other dates of interest.

ADDRESSES: Submit comments electronically by accessing the ''Filing Online'' link in the banner at the top of the Commission's Web site (*http://www.prc.gov*) or by directly accessing the Commission's Filing Online system at *https://www.prc.gov/prc-pages/filing-online/login.aspx.* Commenters who cannot submit their views electronically should contact the person identified in the **FOR FURTHER INFORMATION CONTACT** section as the source for case-related information for advice on alternatives to electronic filing.

FOR FURTHER INFORMATION CONTACT: Stephen L. Sharfman, General Counsel, at 202–789–6820 (case-related information) or *DocketAdmins@prc.gov* (electronic filing assistance).

SUPPLEMENTARY INFORMATION: Notice is hereby given that, pursuant to 39 U.S.C. 404(d), on August 22, 2011, the Commission received a petition for review of the Postal Service's determination to close the Leonardsville post office in Leonardsville, New York. The petition was filed by Kingsley D. Wratten (Petitioner) and is postmarked August 15, 2011. The Commission hereby institutes a proceeding under 39 U.S.C. 404(d)(5) and establishes Docket No. A2011–51 to consider Petitioner's appeal. If Petitioner would like to further explain his position with supplemental information or facts, Petitioner may either file a Participant Statement on PRC Form 61 or file a brief with the Commission no later than September 26, 2011.

Categories of issues apparently raised. Petitioner contends that the Postal Service failed to consider whether or not it will continue to provide a maximum degree of effective and regular postal services to the community. *See* 39 U.S.C. 404(d)(2)(A)(iii).

After the Postal Service files the administrative record and the Commission reviews it, the Commission may find that there are more legal issues than the one set forth above, or that the Postal Service's determination disposes of one or more of those issues. The deadline for the Postal Service to file the applicable administrative record with the Commission is September 6, 2011. *See* 39 CFR 3001.113. In addition, the due date for any responsive pleading by the Postal Service to this Notice is September 6, 2011.

Availability; Web site posting. The Commission has posted the appeal and supporting material on its Web site at *http://www.prc.gov.* Additional filings in this case and participants' submissions also will be posted on the Commission's Web site, if provided in electronic format or amenable to conversion, and not subject to a valid protective order. Information on how to use the Commission's Web site is available online or by contacting the Commission's webmaster via telephone at 202–789–6873 or via electronic mail at *prc-webmaster@prc.gov.*

The appeal and all related documents are also available for public inspection in the Commission's docket section. Docket section hours are 8 a.m. to 4:30 p.m., eastern time, Monday through Friday, except on Federal government holidays. Docket section personnel may be contacted via electronic mail at *prc-dockets@prc.gov* or via telephone at 202–789–6846.

Filing of documents. All filings of documents in this case shall be made using the Internet (Filing Online) pursuant to Commission rules 9(a) and 10(a) at the Commission's Web site, *http://www.prc.gov,* unless a waiver is obtained. *See* 39 CFR 3001.9(a) and 3001.10(a). Instructions for obtaining an account to file documents online may be found on the Commission's Web site or by contacting the Commission's docket section at *prc-dockets@prc.gov* or via telephone at 202–789–6846.

The Commission reserves the right to redact personal information which may infringe on an individual's privacy rights from documents filed in this proceeding.

Intervention. Persons, other than Petitioner and respondent, wishing to be heard in this matter are directed to file a notice of intervention. *See* 39 CFR 3001.111(b). Notices of intervention in this case are to be filed on or before September 19, 2011. A notice of intervention shall be filed using the Internet (Filing Online) at the Commission's Web site unless a waiver is obtained for hardcopy filing. *See* 39 CFR 3001.9(a) and 3001.10(a).

Further procedures. By statute, the Commission is required to issue its decision within 120 days from the date it receives the appeal. *See* 39 U.S.C. 404(d)(5). A procedural schedule has been developed to accommodate this statutory deadline. In the interest of expedition, in light of the 120-day decision schedule, the Commission may request the Postal Service or other participants to submit information or memoranda of law on any appropriate issue. As required by the Commission rules, if any motions are filed, responses are due 7 days after any such motion is filed. *See* 39 CFR 3001.21.

It is ordered:

1. The Postal Service shall file the applicable administrative record regarding this appeal no later than September 6, 2011.

2. Any responsive pleading by the Postal Service to this notice is due no later than September 6, 2011.

3. The procedural schedule listed below is hereby adopted.

4. Pursuant to 39 U.S.C. 505, Patricia A. Gallagher is designated officer of the Commission (Public Representative) to represent the interests of the general public.

5. The Secretary shall arrange for publication of this notice and order in the **Federal Register.**

By the Commission.

Shoshana M. Grove,

Secretary.

PROCEDURAL SCHEDULE

August 22, 2011	Filing of Appeal.
September 6, 2011	Deadline for the Postal Service to file the applicable administrative record in this appeal.
September 6, 2011	Deadline for the Postal Service to file any responsive pleading.
September 19, 2011	Deadline for notices to intervene (*see* 39 CFR 3001.111(b)).
September 26, 2011	Deadline for Petitioner's Form 61 or initial brief in support of petition (*see* 39 CFR 3001.115(a) and (b)).
October 17, 2011	Deadline for answering brief in support of the Postal Service (*see* 39 CFR 3001.115(c)).
November 1, 2011	Deadline for reply briefs in response to answering briefs (*see* 39 CFR 3001.115(d)).
November 8, 2011	Deadline for motions by any party requesting oral argument; the Commission will schedule oral argument only when it is a necessary addition to the written filings (*see* 39 CFR 3001.116).
December 13, 2011	Expiration of the Commission's 120-day decisional schedule (*see* 39 U.S.C. 404(d)(5)).

[FR Doc. 2011–22283 Filed 8–30–11; 8:45 am]

BILLING CODE 7710–FW–P

SECURITIES AND EXCHANGE COMMISSION

[Release No. 34–65196; File No. SR–EDGA–2011–28]

Self-Regulatory Organizations; EDGA Exchange, Inc.; Notice of Filing and Immediate Effectiveness of Proposed Rule Change To Amend EDGA Rule 1.5(q)

August 25, 2011.

Pursuant to Section 19(b)(1) of the Securities Exchange Act of 1934 (''Act'') [1] and Rule 19b–4 thereunder,[2] notice is hereby given that, on August 19, 2011, EDGA Exchange, Inc. (the ''Exchange'' or ''EDGA'') filed with the Securities and Exchange Commission (''Commission'') the proposed rule change as described in Items I and II below, which Items have been prepared by the self-regulatory organization. The Commission is publishing this notice to solicit comments on the proposed rule change from interested persons.

I. Self-Regulatory Organization's Statement of the Terms of Substance of the Proposed Rule Change

EDGA Exchange, Inc. (''EDGA'' or the ''Exchange''), proposes to amend EDGA Rule 1.5(q) to change the starting time of the Pre-Opening Session from 8 a.m. Eastern Time (''ET'') to 7 a.m. ET. The text of the proposed rule change is attached as Exhibit 5 and is available on the Exchange's Web site at *www.directedge.com,* at the Exchange's principal office, and at the Public Reference Room of the Commission.

II. Self-Regulatory Organization's Statement of the Purpose of, and Statutory Basis for, the Proposed Rule Change

In its filing with the Commission, the Exchange included statements concerning the purpose of, and basis for, the proposed rule change and discussed any comments it received on the proposed rule change. The text of these statements may be examined at the places specified in Item IV below. The self-regulatory organization has prepared summaries, set forth in Sections A, B and C below, of the most significant aspects of such statements.

A. Self-Regulatory Organization's Statement of the Purpose of, and Statutory Basis for, the Proposed Rule Change

1. Purpose

The purpose of this filing is to amend EDGA Rule 1.5(q) to change the starting time of the Pre-Opening Session from 8 a.m. ET to 7 a.m. ET. A conforming amendment is also made to Rule 14.1(c)(2) to change the reference for the start time of the Pre-Opening Session from 9 a.m.[3] to 7 a.m.

The Exchange is a fully electronic system that accommodates diverse business models and trading preferences. The Exchange utilizes technology to aggregate and display liquidity and make it available for execution of orders. The Exchange is

[1] 15 U.S.C.78s(b)(1).

[2] 17 CFR 240.19b–4.

[3] The Exchange notes that this rule currently contains an inaccurate reference to 9 a.m. as the beginning of the Pre-Opening Session.

proposing to expand its operational hours to open the System[4] earlier so that firms can enter orders and execute beginning at 7 a.m. rather than 8 a.m. This change will allow the Exchange to compete with other exchanges that open their markets for entry of orders prior to 8 a.m.[5]

The Exchange will provide notice to members in an information circular when this proposed rule change will be effective, which date will be no later than January 1, 2012.

2. Statutory Basis

The Exchange believes that the proposed rule change is consistent with the provisions of Section 6 of the Act,[6] in general, and with Sections 6(b)(1) and 6(b)(5) of the Act,[7] in particular, in that the proposal enables the Exchange to be so organized as to have the capacity to be able to carry out the purposes of the Act and to comply with and enforce compliance by members, member organizations, and persons associated with members and member organizations with provisions of the Act, the rules and regulations thereunder, and the rules of the Exchange. The proposal is also consistent with Section 6 of the Act in that the proposal is designed to prevent fraudulent and manipulative acts and practices, to promote just and equitable principles of trade, to foster cooperation and coordination with persons engaged in regulating, clearing, settling, processing information with respect to, and facilitating transactions in, securities, to remove impediments to and perfect the mechanism of a free and open market and a national market system, and, in general, to protect investors and the public interest. An earlier opening time will enhance the national market system by providing market participants increased opportunity to more effectively carry out the execution of orders in the manner addressed by Exchange rules. Such improvements will enhance the protection of investors and the public interest.

B. Self-Regulatory Organization's Statement on Burden on Competition

The proposed rule change does not impose any burden on competition that is not necessary or appropriate in furtherance of the purposes of the Act.

C. Self-Regulatory Organization's Statement on Comments on the Proposed Rule Change Received From Members, Participants, or Others

The Exchange has not solicited, and does not intend to solicit, comments on this proposed rule change. The Exchange has not received any unsolicited written comments from members or other interested parties.

III. Date of Effectiveness of the Proposed Rule Change and Timing for Commission Action

Because the foregoing proposed rule change does not: (i) Significantly affect the protection of investors or the public interest; (ii) impose any significant burden on competition; and (iii) become operative for 30 days from the date on which it was filed, or such shorter time as the Commission may designate, it has become effective pursuant to 19(b)(3)(A) of the Act[8] and Rule 19b–4(f)(6)[9] thereunder.

At any time within 60 days of the filing of the proposed rule change, the Commission summarily may temporarily suspend such rule change if it appears to the Commission that such action is necessary or appropriate in the public interest, for the protection of investors, or otherwise in furtherance of the purposes of the Act.

IV. Solicitation of Comments

Interested persons are invited to submit written data, views, and arguments concerning the foregoing, including whether the proposed rule change is consistent with the Act. Comments may be submitted by any of the following methods:

Electronic Comments

- Use the Commission's Internet comment form (*http://www.sec.gov/rules/sro.shtml*); or
- Send an e-mail to *rule-comments@sec.gov.* Please include File Number SR–EDGA–2011–28 on the subject line.

Paper Comments

- Send paper comments in triplicate to Elizabeth M. Murphy, Secretary, Securities and Exchange Commission, 100 F Street, NE., Washington, DC 20549–1090.

All submissions should refer to File Number SR–EDGA–2011–28. This file number should be included on the subject line if e-mail is used. To help the Commission process and review your comments more efficiently, please use only one method. The Commission will post all comments on the Commission's Internet Web site (*http://www.sec.gov/rules/sro.shtml*). Copies of the submission, all subsequent amendments, all written statements with respect to the proposed rule change that are filed with the Commission, and all written communications relating to the proposed rule change between the Commission and any person, other than those that may be withheld from the public in accordance with the provisions of 5 U.S.C. 552, will be available for Web site viewing and printing in the Commission's Public Reference Room, 100 F Street, NE., Washington, DC 20549, on official business days between the hours of 10 a.m. and 3 p.m. Copies of such filing also will be available for inspection and copying at the principal office of the Exchange. All comments received will be posted without change; the Commission does not edit personal identifying information from submissions. You should submit only information that you wish to make available publicly. All submissions should refer to File Number SR–EDGA–2011–28 and should be submitted on or before September 21, 2011.

For the Commission, by the Division of Trading and Markets, pursuant to delegated authority.[10]

Elizabeth M. Murphy,

Secretary.

[FR Doc. 2011–22218 Filed 8–30–11; 8:45 am]

BILLING CODE 8011–01–P

[4] *See* EDGA Rule 1.5(aa).

[5] *See* The NASDAQ Stock Market LLC Rule 4617 (opens at 7 a.m. EST). *See also* NASDAQ OMX BX Rule 4617 (opens at 7 a.m. EST); NYSE Arca Equities Rule 7.34 (opens at 1 a.m. Pacific Time).

[6] 15 U.S.C. 78f.

[7] 15 U.S.C. 78f(b)(1), (5).

[8] 15 U.S.C. 78s(b)(3)(A).

[9] 17 CFR 240.19b–4(f)(6). In addition, Rule 19b–4(f)(6) requires a self-regulatory organization to give the Commission written notice of its intent to file the proposed rule change at least five business days prior to the date of filing of the proposed rule change, or such shorter time as designated by the Commission. EDGA has satisfied this requirement.

[10] 17 CFR 200.30–3(a)(12).

SECURITIES AND EXCHANGE COMMISSION

[Release No. 34–65198; File No. SR–FICC–2011–06]

Self-Regulatory Organizations; Fixed Income Clearing Corporation; Notice of Filing of Proposed Rule Change To Eliminate Two Rules of the Mortgage-Backed Securities Division That FICC Believes Are No Longer Utilized or Necessary

August 25, 2011.

Pursuant to Section 19(b)(1) of the Securities Exchange Act of 1934 (''Act'')[1] and Rule 19b–4 thereunder[2] notice is hereby given that on August 17, 2011, the Fixed Income Clearing

[1] 15 U.S.C. 78s(b)(1).

[2] 17 CFR 240.19b–4.

Corporation (''FICC'') filed with the Securities and Exchange Commission (''Commission'') the proposed rule change as described in Items I and II below, which Items have been prepared primarily by FICC. The Commission is publishing this notice to solicit comments on the proposed rule change from interested persons.

I. Self-Regulatory Organization's Statement of the Terms of Substance of the Proposed Rule Change

The proposed rule change would eliminate two rules of the Mortgage-Backed Securities Division (''MBSD'') that FICC believes are no longer utilized or necessary.

II. Self-Regulatory Organization's Statement of the Purpose of, and Statutory Basis for, the Proposed Rule Change

In its filing with the Commission, FICC included statements concerning the purpose of and basis for the proposed rule change and discussed any comments it received on the proposed rule change. The text of these statements may be examined at the places specified in Item IV below. FICC has prepared summaries, set forth in sections (A), (B), and (C) below, of the most significant aspects of these statements.[3]

(A) Self-Regulatory Organization's Statement of the Purpose of, and Statutory Basis for, the Proposed Rule Change

The purpose of the proposed rule change is to eliminate two MBSD rules which FICC believes are no longer utilized or necessary. The first rule proposed to be eliminated is Article II, Rule 1, Section 3, which was put in place to stem certain abuses of cash adjustments taking place in the mid to late 1990s (specifically, traders were manipulating pricing on their submission of trades in order to maximize their cash adjustments). Because cash adjustments were deleted from the rules via the approved rule filing FICC 2010–08,[4] FICC believes the rule imposing trade restrictions between accounts is no longer necessary.

The second rule proposed to be eliminated relates to the ''match modes'' currently referenced in the MBSD rules. Currently, the rules provide that dealers may elect to have the comparison of their transactions governed in either ''Exact Match Mode'' or ''Net Position Match Mode.'' In Exact Match Mode, trade input that matches in all other respects will be compared only if the par amount of the eligible securities reported to have been sold or purchased by the dealer for a particular transaction is identical to the par amount for a particular transaction reported by the broker. In a Net Position Match Mode, trade input that matches in all other respects will be compared only if the aggregate par amount for one or more transactions in eligible securities reported to have been sold or purchased by the dealer equals the aggregate par amount for one or more transactions reported by the broker. Currently, no participants have elected to have their transactions governed in Exact Match Mode. FICC believes there is no need to provide participants with a choice of match mode because MBSD's system already attempts to find an exact match for trade input and, only if an exact match is not found, will the system revert to Net Position Match Mode. This change would require the deletion of subpart (a) of Article II, Rule 3, Section 4 and conforming changes to the definitions (in Article I) and in Article II, Rule 3, Sections 3 and 4 to reflect that Net Position Match Mode will be the only available match mode.

Given that FICC believes these rules have no utility for MBSD's participants, MBSD proposes to eliminate these rules. FICC believes elimination of these rules would also promote efficiency. MBSD is currently undertaking a rewrite of its internal software applications and operating systems to promote efficiency and streamline its operations. Approval of the elimination of these rules will allow MBSD to avoid writing unnecessary coding during the rewrite process.

The effective date of this change will be announced to MBSD participants via Important Notice.

FICC believes the proposed rule change is consistent with the requirements of Section 17A of the Act[5] and the rules and regulations thereunder because it would facilitate the prompt and accurate clearance and settlement of securities transactions by eliminating rules that no longer have utility for participants. FICC believes this would promote efficiency because the rules would be more clear and easier to understand once they are revised to remove these outdated and unnecessary rules and resources would be conserved by avoiding writing unnecessary code during MBSD's software rewrite process.

Self-Regulatory Organization's Statement on Burden on Competition

FICC does not believe that the proposed rule change would impose any burden on competition.

(C) Self-Regulatory Organization's Statement on Comments on the Proposed Rule Change Received From Members, Participants or Others

Written comments relating to the proposed rule change have not been solicited or received. FICC will notify the Commission of any written comments received by FICC.

III. Date of Effectiveness of the Proposed Rule Change and Timing for Commission Action

Within 45 days of the date of publication of this notice in the **Federal Register** or within such longer period up to 90 days (i) As the Commission may designate if it finds such longer period to be appropriate and publishes its reasons for so finding or (ii) as to which the self-regulatory organization consents, the Commission will:

(A) By order approve or disapprove the proposed rule change or

(B) institute proceedings to determine whether the proposed rule change should be disapproved.

IV. Solicitation of Comments

Interested persons are invited to submit written data, views, and arguments concerning the foregoing, including whether the proposed rule change is consistent with the Act. Comments may be submitted by any of the following methods:

Electronic Comments

- Use the Commission's Internet comment form (*http://www.sec.gov/rules/sro.shtml*) or
- Send an e-mail to *rule-comments@sec.gov.* Please include File Number SR–FICC–2011–06 on the subject line.

Paper Comments

- Send paper comments in triplicate to Elizabeth M. Murphy, Secretary, Securities and Exchange Commission, 100 F Street, NE., Washington, DC 20549–1090.

All submissions should refer to File Number SR–FICC–2011–06. This file number should be included on the subject line if e-mail is used. To help the Commission process and review your comments more efficiently, please use only one method. The Commission will post all comments on the Commission's Internet Web site (*http://www.sec.gov/rules/sro.shtml*). Copies of the submission, all subsequent

[3] The Commission has modified the text of the summaries prepared by FICC.

[4] *See* Securities Exchange Act Release No. 34–63611 (December 28, 2010), 76 FR 408 (January 4, 2011) (SR–FICC–2010–08).

[5] 15 U.S.C. 78q–1.

amendments, all written statements with respect to the proposed rule change that are filed with the Commission, and all written communications relating to the proposed rule change between the Commission and any person, other than those that may be withheld from the public in accordance with the provisions of 5 U.S.C. 552, will be available for Web site viewing and printing in the Commission's Public Reference Section, 100 F Street, NE., Washington, DC 20549, on official business days between the hours of 10 a.m. and 3 p.m. Copies of such filings will also be available for inspection and copying at the principal office of FICC and on FICC's Web site at *http://www.dtcc.com/downloads/legal/rule_filings/2011/ficc/2011–06.pdf.*

All comments received will be posted without change; the Commission does not edit personal identifying information from submissions. You should submit only information that you wish to make available publicly. All submissions should refer to File Number SR–FICC–2011–06 and should be submitted on or before September 21, 2011.

For the Commission by the Division of Trading and Markets, pursuant to delegated authority.[6]

Elizabeth M. Murphy,

Secretary.

[FR Doc. 2011–22222 Filed 8–30–11; 8:45 am]

BILLING CODE 8011–01–P

[6] 17 CFR 200.30–3(a)(12).

SECURITIES AND EXCHANGE COMMISSION

[Release No. 34–65202; File No. SR–CME–2011–05]

Self-Regulatory Organizations; Chicago Mercantile Exchange, Inc.; Notice of Filing and Order Granting Accelerated Approval of Proposed Rule Change To Amend Certain Rules To Facilitate Clearing of Additional Interest Rate Swap Products

August 25, 2011.

Pursuant to Section 19(b)(1) of the Securities Exchange Act of 1934 (''Act''),[1] and Rule 19b–4 thereunder,[2] notice is hereby given that on August 24, 2011, the Chicago Mercantile Exchange Inc. (''CME'') filed with the Securities and Exchange Commission (''Commission'') the proposed rule change described in Items I and II below, which items have been prepared primarily by CME.[3] The Commission is publishing this Notice and Order to solicit comments on the proposed rule change from interested persons and to approve the proposed rule change on an accelerated basis.

[1] 15 U.S.C. 78s(b)(1).

[2] 17 CFR 240.19b–4.

[3] In its submission, CME incorrectly labeled the file number as CMECH–2011–04.

I. Self-Regulatory Organization's Statement of Terms of Substance of the Proposed Rule Change

The text of the proposed rule change is below. Italicized text indicates additions; bracketed text indicates deletions.

* * * * *

Rule 100—90002.E—No Change.

CME Rule 90002.F. Contract Elections.

With respect to an IRS Contract, each of the following elections made by an IRS Participant for such IRS Contract: the: Effective Date, Notional Amount and currency, Termination Date and any Business Day Convention adjustment, Fixed Rate Payer Payment Dates, Fixed Rate, Floating Rate Payer Payment Dates, Floating Rate Option, *Designated Maturity, Spread, Floating Rate for Initial Floating Rate Payer Calculation Period,* initial payment amount (if any), initial amount payer (if any) and whether the IRS Clearing Participant is acting as *a* Floating Rate Payer or *a* Fixed Rate Payer *and whether the Clearing House is acting as a Floating Rate Payer or a Fixed Rate Payer.*

[CME Rule 90102.D. Calculation Period].

[For any USD IRS Contract submitted to the Clearing House for clearing, if the elections made by the relevant IRS Clearing Members for such USD IRS Contract include ''Compounding'', then the Floating Rate Calculation Period of such USD IRS Contract shall be 6 months and shall entail a Compounding Period equal to 3 months.].

[If such elections do not include ''Compounding'', then the Floating Rate Calculation Period of such USD IRS Contract shall equal 3 months.].

[The Fixed Rate Calculation Period of such USD IRS Contract shall equal 6 months.].

[CME Rule 90102.G. Designated Maturity].

[With respect to an USD IRS Contract, Designated Maturity shall be 3 months.]

II. Self-Regulatory Organization's Statement of Purpose of, and Statutory Basis for, the Proposed Rule Change

In its filing with the Commission, CME included statements concerning the purpose and basis for the proposed rule change and discussed any comments it received on the proposed rule change. The text of these statements may be examined at the places specified in Item III below. CME has prepared summaries, set forth in sections A, B, and C below, of the most significant aspects of such statements.

A. Self-Regulatory Organization's Statement of Purpose of, and Statutory Basis for, the Proposed Rule Change

CME currently offers clearing services for certain interest rate swap products. These proposed rule changes are intended to expand CME's existing US dollar interest rate swap product offerings by adding the following additional contract elections: One month and six month designated maturities; +/− Spreads; and matching on the Floating Amount for the initial Floating Rate Payer Calculation Period.

CME notes that it has also submitted the proposed rule changes that are the subject of this filing to its primary regulator, the Commodity Futures Trading Commission (''CFTC''). The text of the CME rule proposed amendments is in Section I of this notice, with additions underlined and deletions in brackets.

CME believes the proposed rule changes are consistent with the requirements of the Exchange Act including Section 17A of the Exchange Act because they involve clearing of swaps and thus relate solely to CME's swaps clearing activities pursuant to its registration as a derivatives clearing organization under the Commodity Exchange Act (''CEA'') and do not significantly affect any securities clearing operations of the clearing agency or any related rights or obligations of the clearing agency or persons using such service. CME further notes that the policies of the CEA with respect to clearing are comparable to a number of the policies underlying the Exchange Act, such as promoting market transparency for over-the-counter derivatives markets, promoting the prompt and accurate clearance of transactions and protecting investors and the public interest. The proposed rule changes accomplish those objectives by offering investors clearing for an expanded range of interest rate swap products.

B. Self-Regulatory Organization's Statement on Burden on Competition

CME does not believe that the proposed rule change will have any impact, or impose any burden, on competition.

C. Self-Regulatory Organization's Statement on Comments on the Proposed Rule Change Received From Members, Participants, or Others

CME has not solicited, and does not intend to solicit, comments regarding this proposed rule change. CME has not received any unsolicited written comments from interested parties.

III. Solicitation of Comments

Interested persons are invited to submit written data, views and arguments concerning the foregoing, including whether the proposed rule change is consistent with the Act. Comments may be submitted by any of the following methods:

- Electronic comments may be submitted by using the Commission's Internet comment form (*http://www.sec.gov/rules/sro.shtml*), or send an e-mail to *rule-comments@sec.gov* Please include File No. SR–CME–2011–05 on the subject line.
- Paper comments should be sent in triplicate to Elizabeth M. Murphy, Secretary, Securities and Exchange Commission, 100 F Street, NE., Washington, DC 20549–1090.

All submissions should refer to File Number SR–CME–2011–05. This file number should be included on the subject line if e-mail is used. To help the Commission process and review your comments more efficiently, please use only one method. The Commission will post all comments on the Commission's Internet Web site (*http://www.sec.gov/rules/sro.shtml*). Copies of the submission, all subsequent amendments, all written statements with respect to the proposed rule change that are filed with the Commission, and all written communications relating to the proposed rule change between the Commission and any person, other than those that may be withheld from the public in accordance with the provisions of 5 U.S.C. 552, will be available for Web site viewing and printing in the Commission's Public Reference Room, 100 F Street, NE., Washington, DC 20549. Copies of such filing also will be available for inspection and copying at the principal office of CME. All comments received will be posted without change; the Commission does not edit personal identifying information from submissions. You should submit only information that you wish to make available publicly. All submissions should refer to File Number SR–CME–2011–05 and should be submitted on or before September 21, 2011.

IV. Commission's Findings and Order Granting Accelerated Approval of Proposed Rule Change

Section 19(b) of the Act [4] directs the Commission to approve a proposed rule change of a self-regulatory organization if it finds that such proposed rule change is consistent with the requirements of the Act and the rules and regulations thereunder applicable to such organization. The Commission finds that the proposed rule change is consistent with the requirements of the Act, in particular the requirements of Section 17A of the Act,[5] and the rules and regulations thereunder applicable to CME. Specifically, the Commission finds that the proposed rule change is consistent with Section 17A(b)(3)(F) of the Act which requires, among other things, that the rules of a clearing agency be designed to promote the prompt and accurate clearance and settlement of derivative agreements, contracts, and transactions because it should allow CME to enhance its services in clearing interest rate swaps, thereby promoting the prompt and accurate clearance and settlement of derivative agreements, contracts, and transactions.[6]

The Commission finds good cause for accelerating approval because: (i) The proposed rule change does not significantly affect any securities clearing operations of the clearing agency (whether in existence or contemplated by its rules) or any related rights or obligations of the clearing agency or persons using such service; (ii) CME has indicated that not providing accelerated approval would have a significant impact on the swap clearing business of CME as a designated clearing organization; and (iii) the activity relating to the non-security clearing operations of the clearing agency for which the clearing agency is seeking approval is subject to regulation by another regulator.

V. Conclusion

It Is Therefore Ordered, pursuant to Section 19(b)(2) [7] of the Act, that the proposed rule change (SR–CME–2011–05) is approved on an accelerated basis.

For the Commission by the Division of Trading and Markets, pursuant to delegated authority.[8]

Elizabeth M. Murphy,

Secretary.

[FR Doc. 2011–22258 Filed 8–30–11; 8:45 am]

BILLING CODE 8011–01–P

[4] 15 U.S.C. 78s(b).

[5] 15 U.S.C. 78q–1. In approving this proposed rule change, the Commission has considered the proposed rule's impact on efficiency, competition, and capital formation. 15 U.S.C. 78c(f).

[6] 15 U.S.C. 78q–1(b)(3)(F).

[7] 15 U.S.C. 78s(b)(2).

[8] 17 CFR 200.30–3(a)(12).

SECURITIES AND EXCHANGE COMMISSION

[Release No. 34–65201; File No. SR–Phlx–2011–90]

Self-Regulatory Organizations; NASDAQ OMX PHLX LLC; Order Approving Proposed Rule Change Relating to Board of Director Qualifications

August 25, 2011.

I. Introduction

On June 30, 2011, NASDAQ OMX PHLX LLC (''Phlx'' or the ''Exchange'') filed with the Securities and Exchange Commission (''Commission''), pursuant to Section 19(b)(1) of the Securities Exchange Act of 1934 (''Act''),[1] and Rule 19b–4 thereunder,[2] a proposed rule change relating to the qualifications of its Board of Directors (''Board''). The proposed rule change was published for comment in the **Federal Register** on July 14, 2011.[3] The Commission received no comment letters regarding the proposal. This order approves the proposed rule change.

II. Description of the Proposal

The Exchange proposes to amend its By-Laws to revise the qualifications for any position on the Board required to be representative of issuers. Currently, Section 3–2 of the Exchange By-Laws provides: ''[T]he number of Non-Industry Directors, including at least one Public Director [4] and at least one issuer representative (or if the Board consists of ten or more Directors, at least two issuer representatives), shall equal or exceed the sum of the number of Industry Directors [5] and Member

[1] 15 U.S.C. 78s(b)(1).

[2] 17 CFR 240.19b–4.

[3] *See* Securities Exchange Act Release No. 64845 (July 8, 2011), 76 FR 41549 (July 14, 2011) (''Notice'').

[4] A Public Director is ''a Director who has no material business relationship with a broker or dealer, the Exchange or its affiliates, or FINRA.'' *See* Exchange By-Law Article I(gg).

[5] An Industry Director is ''a Director (excluding any two officers of the Exchange, selected at the sole discretion of the Board, amongst those officers who may be serving as Directors (the 'Staff Directors')), who (i) is or has served in the prior three years as an officer, director, or employee of a broker or dealer, excluding an outside director or

Continued

Representative Directors [6] to be elected under the terms of the LLC Agreement.'' [7] The Exchange recently adopted this provision when it conformed its By-Laws to those of NASDAQ.[8] According to the Exchange, however, it does not have a significant number of original listings as does NASDAQ,[9] and therefore has less available issuer representatives to serve on the Board. Consequently, the Exchange now proposes to change the requirement by broadening it to require a director representative of issuers and investors instead of a director that is representative only of issuers. The Exchange believes that the expansion of the director position from one that is representative of issuers to one that is representative of issuers and investors is more appropriate for Phlx.[10] The nomination and election process for such directors would remain the same. The director representative of issuers and investors would be nominated by the Nominating Committee and elected by the sole shareholder, The NASDAQ OMX Group, Inc.[11]

The Exchange also proposes to eliminate the requirement that there be at least two of these director positions representative of issuers if the Board consists of ten or more directors. In its proposal, the Exchange notes that Section 6(b)(3) of the Act [12] only requires that one Director representative represents issuers and investors.[13]

III. Discussion

After careful review of the proposal, the Commission finds that the proposed rule change is consistent with the requirements of the Act and the rules and regulations thereunder applicable to a national securities exchange.[14] In particular, the Commission finds that the proposal is consistent with Section 6(b)(5) of the Act,[15] which requires, among other things, that the rules of an exchange be designed to promote just and equitable principles of trade, to remove impediments to and perfect the mechanism of a free and open market and a national market system, and, in general, to protect investors and the public interest. The Commission further finds that the proposal is consistent with Section 6(b)(3) of the Act,[16] which requires that one or more directors be representative of issuers and investors and not be associated with a member of the exchange, broker, or dealer.

The Commission believes that the proposed expansion from an issuer representative to a representative of issuers and investors, and elimination of the requirement that the Board have two such representatives if the Board consists of ten or more directors are consistent with the Act. The fair representation requirement in Section 6(b)(3) of the Act [17] is intended to give members a voice in the selection of an exchange's directors and the administration of its affairs. The Commission notes that this change tracks the statutory language included in Section 6(b)(3) of the Act,[18] which requires one or more directors to be ''representative of issuers and investors.'' The Commission also notes that the elimination of the requirement to have at least two director positions representative of issuers if the Board consists of ten or more directors is consistent with Section 6(b)(3) of the Act,[19] which only requires the Board to have one such representative. Further, the proposed rule change is consistent with the Act in that it is designed to ensure that the Board continues to satisfy compositional requirements, particularly those concerning fair representation. The Exchange will continue to require the Board composition to include the requisite Public Directors, Industry Directors, and Member Representative Directors (the latter will continue to constitute twenty percent of the Board). In addition, the proposed change will not impact the procedures to nominate and elect any director to the Board that are currently in place. Accordingly, the Commission finds that Phlx's revised By-Laws, as proposed, will continue to provide board qualification requirements that are consistent with the Act.

IV. Conclusion

It is therefore ordered, pursuant to Section 19(b)(2) of the Act,[20] that the proposed rule change (SR–Phlx–2011–90) be, and hereby is, approved.

For the Commission, by the Division of Trading and Markets, pursuant to delegated authority.[21]

Elizabeth M. Murphy,

Secretary.

[FR Doc. 2011–22307 Filed 8–30–11; 8:45 am]

BILLING CODE 8011–01–P

a director not engaged in the day-to-day management of a broker or dealer; (ii) is an officer, director (excluding an outside director), or employee of an entity that owns more than ten percent of the equity of a broker or dealer, and the broker or dealer accounts for more than five percent of the gross revenues received by the consolidated entity; (iii) owns more than five percent of the equity securities of any broker or dealer, whose investments in brokers or dealers exceed ten percent of his or her net worth, or whose ownership interest otherwise permits him or her to be engaged in the day-to-day management of a broker or dealer; (iv) provides professional services to brokers or dealers, and such services constitute 20 percent or more of the professional revenues received by the Director or 20 percent or more of the gross revenues received by the Director's firm or partnership; (v) provides professional services to a director, officer, or employee of a broker, dealer, or corporation that owns 50 percent or more of the voting stock of a broker or dealer, and such services relate to the director's, officer's, or employee's professional capacity and constitute 20 percent or more of the professional revenues received by the Director or member or 20 percent or more of the gross revenues received by the Director's or member's firm or partnership; or (vi) has a consulting or employment relationship with or provides professional services to the Exchange or any affiliate thereof or to FINRA (or any predecessor) or has had any such relationship or provided any such services at any time within the prior three years.'' *See* Exchange By-Law Article I(p).

[6] A Member Representative Director is ''a Director who has been elected or appointed after having been nominated by the Member Nominating Committee or by a Member pursuant to [the] By-Laws. A Member Representative Director may, but is not required to be, an officer, director, employee, or agent of a Member. *See* Exchange By-Law Article I(w).

[7] The Exchange recently adopted this provision to its By-Laws. *See* Securities Exchange Act Release No. 64338 (April 25, 2011), 76 FR 24069 (April 29, 2011) (SR–Phlx–2011–13) (conforming some of the Exchange By-Laws to the By-Laws of The NASDAQ Stock Market LLC (''NASDAQ'')).

[8] *See id.*

[9] *See* Notice, *supra* note 3, 76 FR at 41550 n.9.

[10] *Id.*

[11] *See* Exchange By-Law Article V, Section 5–3 and Article II, Section 2–1.

[12] 15 U.S.C. 78f(b)(3).

[13] *See* Notice, *supra* note 3, 76 FR at 41550.

[14] In approving this proposed rule change, the Commission has considered the proposed rule's impact on efficiency, competition, and capital formation. *See* 15 U.S.C. 78c(f).

[15] 15 U.S.C. 78f(b)(5).

[16] 15 U.S.C. 78f(b)(3).

[17] *Id.*

[18] *Id.*

[19] *Id.*

[20] 15 U.S.C. 78s(b)(2).

[21] 17 CFR 200.30–3(a)(12).

SECURITIES AND EXCHANGE COMMISSION

[Release No. 34–65192; File No. SR–NYSEAmex–2011–62]

Self-Regulatory Organizations; NYSE Amex LLC; Notice of Filing and Immediate Effectiveness of Proposed Rule Change Adding New Commentary .02 to NYSE Amex Options Rule 965NY To Provide for the Nullification of Reported Trades by Mutual Agreement of the Parties Thereto

August 24, 2011.

Pursuant to Section 19(b)(1) [1] of the Securities Exchange Act of 1934 (the ''Act'') [2] and Rule 19b–4 thereunder,[3] notice is hereby given that on August 16, 2011, NYSE Amex LLC (the ''Exchange'' or ''NYSE Amex'') filed with the Securities and Exchange

[1] 15 U.S.C. 78s(b)(1).

[2] 15 U.S.C. 78a.

[3] 17 CFR 240.19b–4.

Commission (the ''Commission'') the proposed rule change as described in Items I, II, and III below, which Items have been prepared by the self-regulatory organization. The Commission is publishing this notice to solicit comments on the proposed rule change from interested persons.

I. Self-Regulatory Organization's Statement of the Terms of Substance of the Proposed Rule Change

The Exchange proposes to add new Commentary .02 to NYSE Amex Options Rule 965NY to provide for the nullification of reported trades by mutual agreement of the parties thereto. The text of the proposed rule change is available at the Exchange, the Commission's Public Reference Room, and *http://www.nyse.com.*

II. Self-Regulatory Organization's Statement of the Purpose of, and Statutory Basis for, the Proposed Rule Change

In its filing with the Commission, the self-regulatory organization included statements concerning the purpose of, and basis for, the proposed rule change and discussed any comments it received on the proposed rule change. The text of those statements may be examined at the places specified in Item IV below. The Exchange has prepared summaries, set forth in sections A, B, and C below, of the most significant parts of such statements.

A. Self-Regulatory Organization's Statement of the Purpose of, and Statutory Basis for, the Proposed Rule Change

1. Purpose

The Exchange is proposing new Commentary .02 to NYSE Amex Options Rule 965NY to provide for the nullification of reported trades by mutual agreement of the parties thereto.

As provided under proposed Commentary .02 to Rule 965NY, a trade would be nullified if all parties to the trade agree to the nullification. After agreeing to a trade nullification, one party would be required to promptly notify the Exchange for dissemination of cancellation information to the Options Price Reporting Authority (''OPRA'').[4]

Proposed Commentary .02 to Rule 965NY would provide the parties to a trade with the ability to nullify a trade under circumstances where, for example, an obvious or catastrophic error is not deemed to have occurred, but the parties to the trade nonetheless desire that the trade be nullified.

2. Statutory Basis

The Exchange believes that the proposed rule change, which would permit a trade to be nullified upon the mutual agreement of all parties to the trade, is consistent with Section 6(b) of the Act,[5] in general, and furthers the objectives of Section 6(b)(5) of the Act,[6] in particular, because it is designed to promote just and equitable principles of trade, remove impediments to and perfect the mechanisms of a free and open market and a national market system and, in general, to protect investors and the public interest. The proposed rule change makes clear the contractual rights of the parties to a trade to nullify the trade upon mutual agreement. The Exchange believes that the proposed rule change is consistent with a free and open market and the public interest because it gives effect to the contractual rights of the parties to a trade.

B. Self-Regulatory Organization's Statement on Burden on Competition

The Exchange does not believe that the proposed rule change will impose any burden on competition that is not necessary or appropriate in furtherance of the purposes of the Act.

C. Self-Regulatory Organization's Statement on Comments on the Proposed Rule Change Received From Members, Participants, or Others

No written comments were solicited or received with respect to the proposed rule change.

III. Date of Effectiveness of the Proposed Rule Change and Timing for Commission Action

The Exchange has filed the proposed rule change pursuant to Section 19(b)(3)(A)(iii) of the Act[7] and Rule 19b–4(f)(6) thereunder.[8] Because the proposed rule change does not: (i) Significantly affect the protection of investors or the public interest; (ii) impose any significant burden on competition; and (iii) become operative prior to 30 days from the date on which it was filed, or such shorter time as the Commission may designate, if consistent with the protection of investors and the public interest, the proposed rule change has become effective pursuant to Section 19(b)(3)(A) of the Act and Rule 19b–4(f)(6)(iii) thereunder.

A proposed rule change filed under Rule 19b–4(f)(6)[9] normally does not become operative prior to 30 days after the date of the filing. However, pursuant to Rule 19b–4(f)(6)(iii),[10] the Commission may designate a shorter time if such action is consistent with the protection of investors and the public interest.

At any time within 60 days of the filing of such proposed rule change, the Commission summarily may temporarily suspend such rule change if it appears to the Commission that such action is necessary or appropriate in the public interest, for the protection of investors, or otherwise in furtherance of the purposes of the Act.

IV. Solicitation of Comments

Interested persons are invited to submit written data, views, and arguments concerning the foregoing, including whether the proposed rule change is consistent with the Act. Comments may be submitted by any of the following methods:

Electronic Comments

- Use the Commission's Internet comment form (*http://www.sec.gov/rules/sro.shtml*); or
- Send an e-mail to *rule-comments@sec.gov*. Please include File Number SR–NYSEAmex–2011–62 on the subject line.

Paper Comments

- Send paper comments in triplicate to Elizabeth M. Murphy, Secretary, Securities and Exchange Commission, 100 F Street, NE., Washington, DC 20549–1090.

All submissions should refer to File Number SR–NYSEAmex–2011–62. This file number should be included on the subject line if e-mail is used. To help the Commission process and review your comments more efficiently, please use only one method. The Commission will post all comments on the Commission's Internet Web site (*http://www.sec.gov/rules/sro.shtml*). Copies of the submission, all subsequent amendments, all written statements with respect to the proposed rule change that are filed with the Commission, and all written communications relating to the proposed rule change between the Commission and any person, other than those that may be withheld from the public in accordance with the provisions of 5 U.S.C. 552, will be

[4] The obligation to notify the Exchange would also be reflected within proposed new paragraph (f) to NYSE Amex Options Rule 957NY.

[5] 15 U.S.C. 78f(b).

[6] 15 U.S.C. 78f(b)(5).

[7] 15 U.S.C. 78s(b)(3)(A)(iii).

[8] 17 CFR 240.19b–4(f)(6).

[9] 17 CFR 240.19b–4(f)(6).

[10] 17 CFR 240.19b–4(f)(6)(iii).

available for Web site viewing and printing in the Commission's Public Reference Room, 100 F Street, NE., Washington, DC 20549, on official business days between the hours of 10 a.m. and 3 p.m. Copies of the filing also will be available for inspection and copying at the NYSE's principal office, and on its Web site at *http://www.nyse.com.* The text of the proposed rule change is available on the Commission's Web site at *http://www.sec.gov.* All comments received will be posted without change; the Commission does not edit personal identifying information from submissions. You should submit only information that you wish to make available publicly.

All submissions should refer to File Number SR–NYSEAmex–2011–62 and should be submitted on or before September 21, 2011.

For the Commission, by the Division of Trading and Markets, pursuant to delegated authority.[11]

Elizabeth M. Murphy,

Secretary.

[FR Doc. 2011–22306 Filed 8–30–11; 8:45 am]

BILLING CODE 8011–01–P

[11] 17 CFR 200.30–3(a)(12).

SECURITIES AND EXCHANGE COMMISSION

[Release No. 34–65191; File No. SR–NYSEArca–2011–60]

Self-Regulatory Organizations; NYSE Arca, Inc.; Notice of Filing and Immediate Effectiveness of Proposed Rule Change Adding New Commentary .02 to NYSE Arca Options Rule 6.77 To Provide for the Nullification of Reported Trades by Mutual Agreement of the Parties Thereto

August 24, 2011.

Pursuant to Section 19(b)(1)[1] of the Securities Exchange Act of 1934 (the ''Act'')[2] and Rule 19b–4 thereunder,[3] notice is hereby given that, on August 16, 2011, NYSE Arca, Inc. (the ''Exchange'' or ''NYSE Arca'') filed with the Securities and Exchange Commission (the ''Commission'') the proposed rule change as described in Items I, II, and III below, which Items have been prepared by the self-regulatory organization. The Commission is publishing this notice to solicit comments on the proposed rule change from interested persons.

[1] 15 U.S.C. 78s(b)(1).

[2] 15 U.S.C. 78a.

[3] 17 CFR 240.19b–4.

I. Self-Regulatory Organization's Statement of the Terms of Substance of the Proposed Rule Change

The Exchange proposes to add new Commentary .02 to NYSE Arca Options Rule 6.77 to provide for the nullification of reported trades by mutual agreement of the parties thereto. The text of the proposed rule change is available at the Exchange, the Commission's Public Reference Room, and *http://www.nyse.com.*

II. Self-Regulatory Organization's Statement of the Purpose of, and Statutory Basis for, the Proposed Rule Change

In its filing with the Commission, the self-regulatory organization included statements concerning the purpose of, and basis for, the proposed rule change and discussed any comments it received on the proposed rule change. The text of those statements may be examined at the places specified in Item IV below. The Exchange has prepared summaries, set forth in sections A, B, and C below, of the most significant parts of such statements.

A. Self-Regulatory Organization's Statement of the Purpose of, and Statutory Basis for, the Proposed Rule Change

1. Purpose

The Exchange is proposing new Commentary .02 to NYSE Arca Options Rule 6.77 to provide for the nullification of reported trades by mutual agreement of the parties thereto.

As provided under proposed Commentary .02 to Rule 6.77, a trade would be nullified if all parties to the trade agree to the nullification. After agreeing to a trade nullification, one party would be required to promptly notify the Exchange for dissemination of cancellation information to the Options Price Reporting Authority (''OPRA'').[4]

Proposed Commentary .02 to Rule 6.77 would provide the parties to a trade with the ability to nullify a trade under circumstances where, for example, an obvious or catastrophic error is not deemed to have occurred, but the parties to the trade nonetheless desire that the trade be nullified.

2. Statutory Basis

The Exchange believes that the proposed rule change, which would permit a trade to be nullified upon the mutual agreement of all parties to the trade, is consistent with Section 6(b) of the Act,[5] in general, and furthers the objectives of Section 6(b)(5) of the Act,[6] in particular, because it is designed to promote just and equitable principles of trade, remove impediments to and perfect the mechanisms of a free and open market and a national market system and, in general, to protect investors and the public interest. The proposed rule change makes clear the contractual rights of the parties to a trade to nullify the trade upon mutual agreement. The Exchange believes that the proposed rule change is consistent with a free and open market and the public interest because it gives effect to the contractual rights of the parties to a trade.

[4] The obligation to notify the Exchange would also be reflected within proposed new paragraph (f) to NYSE Arca Options Rule 6.69.

B. Self-Regulatory Organization's Statement on Burden on Competition

The Exchange does not believe that the proposed rule change will impose any burden on competition that is not necessary or appropriate in furtherance of the purposes of the Act.

C. Self-Regulatory Organization's Statement on Comments on the Proposed Rule Change Received From Members, Participants, or Others

No written comments were solicited or received with respect to the proposed rule change.

III. Date of Effectiveness of the Proposed Rule Change and Timing for Commission Action

The Exchange has filed the proposed rule change pursuant to Section 19(b)(3)(A)(iii) of the Act[7] and Rule 19b–4(f)(6) thereunder.[8] Because the proposed rule change does not: (i) Significantly affect the protection of investors or the public interest; (ii) impose any significant burden on competition; and (iii) become operative prior to 30 days from the date on which it was filed, or such shorter time as the Commission may designate, if consistent with the protection of investors and the public interest, the proposed rule change has become effective pursuant to Section 19(b)(3)(A) of the Act and Rule 19b–4(f)(6)(iii) thereunder.

A proposed rule change filed under Rule 19b–4(f)(6)[9] normally does not become operative prior to 30 days after the date of the filing. However, pursuant to Rule 19b–4(f)(6)(iii),[10] the Commission may designate a shorter time if such action is consistent with the

[5] 15 U.S.C. 78f(b).

[6] 15 U.S.C. 78f(b)(5).

[7] 15 U.S.C. 78s(b)(3)(A)(iii).

[8] 17 CFR 240.19b–4(f)(6).

[9] 17 CFR 240.19b–4(f)(6).

[10] 17 CFR 240.19b–4(f)(6)(iii).

protection of investors and the public interest.

At any time within 60 days of the filing of such proposed rule change, the Commission summarily may temporarily suspend such rule change if it appears to the Commission that such action is necessary or appropriate in the public interest, for the protection of investors, or otherwise in furtherance of the purposes of the Act.

IV. Solicitation of Comments

Interested persons are invited to submit written data, views, and arguments concerning the foregoing, including whether the proposed rule change is consistent with the Act. Comments may be submitted by any of the following methods:

Electronic Comments

- Use the Commission's Internet comment form (*http://www.sec.gov/rules/sro.shtml*); or
- Send an e-mail to *rule-comments@sec.gov.* Please include File Number SR–NYSEArca–2011–60 on the subject line.

Paper Comments

- Send paper comments in triplicate to Elizabeth M. Murphy, Secretary, Securities and Exchange Commission, 100 F Street, NE., Washington, DC 20549–1090.

All submissions should refer to File Number SR–NYSEArca–2011–60. This file number should be included on the subject line if e-mail is used. To help the Commission process and review your comments more efficiently, please use only one method. The Commission will post all comments on the Commission's Internet Web site (*http://www.sec.gov/rules/sro.shtml*). Copies of the submission, all subsequent amendments, all written statements with respect to the proposed rule change that are filed with the Commission, and all written communications relating to the proposed rule change between the Commission and any person, other than those that may be withheld from the public in accordance with the provisions of 5 U.S.C. 552, will be available for website viewing and printing in the Commission's Public Reference Room, 100 F Street, NE., Washington, DC 20549, on official business days between the hours of 10 a.m. and 3 p.m. Copies of the filing also will be available for inspection and copying at the NYSE's principal office, and on its Web site at *http://www.nyse.com.* The text of the proposed rule change is available on the Commission's Web site at *http://www.sec.gov.* All comments received will be posted without change; the Commission does not edit personal identifying information from submissions. You should submit only information that you wish to make available publicly.

All submissions should refer to File Number SR–NYSEArca–2011–60 and should be submitted on or before September 21, 2011.

For the Commission, by the Division of Trading and Markets, pursuant to delegated authority.[11]

Elizabeth M. Murphy,

Secretary.

[FR Doc. 2011–22305 Filed 8–30–11; 8:45 am]

BILLING CODE 8011–01–P

SECURITIES AND EXCHANGE COMMISSION

[Release No. 34–65200; File No. SR–CME–2011–02]

Self-Regulatory Organizations; Chicago Mercantile Exchange, Inc.; Notice of Filing and Immediate Effectiveness of Proposed Rule Change To Reflect Differences in Proprietary Trading Exchange Fees Based on Ownership of CME Group Shares

August 25, 2011.

Pursuant to Section 19(b)(1) of the Securities Exchange Act of 1934 (''Act''),[1] and Rule 19b–4 thereunder,[2] notice is hereby given that on August 12, 2011, Chicago Mercantile Exchange Inc. (''CME'') filed with the Securities and Exchange Commission (''Commission'') the proposed rule change described in Items I and II below, which items have been prepared primarily by CME. CME filed the proposed rule change pursuant to Section 19(b)(3)(A)[3] of the Act and Rule 19b–4(f)(4)(ii)[4] thereunder.

I. Self-Regulatory Organization's Statement of Terms of Substance of the Proposed Rule Change

The text of the proposed rule change is below. Italicized text indicates additions; bracketed text indicates deletions.

* * * * *

Rule 106. Transactions, Security Transactions, and Authorizations To Transfer or Sell

106.I. Affiliate Member Firm.

An ''affiliate'' shall be defined to include a *firm* [clearing member or Rule 106.J equity member or a firm] that either: owns, directly or indirectly, 100% of a clearing member with shares or Rule 106.J. equity member firm or has 100% ownership, direct or indirect, in common with a firm that owns, directly or indirectly, 100% of a clearing member *with shares* or Rule 106.J. equity member firm. *Clearing members with shares are those clearing members that maintain CME Group Class A shares in accordance with CME Rule 106.J. Equity Member Firm requirements in order to receive equity member rates.*

A membership may be owned by a clearing member *with shares,* Rule 106.J. equity member or affiliate firm under this Rule. The membership may be held in the name of the firm or principals or employees of an affiliate and be transferred among its principals and employees provided that: (1) The transfer is approved by Exchange staff; (2) the transferee is approved for membership pursuant to the rules of the Exchange; and (3) the transfer is for the legitimate business purposes of the firm. The affiliate firm shall have the right, at any time, to withdraw the authority of the transferee to trade on the membership owned by the clearing member with shares, Rule 106.J. equity member or affiliate firm, but must withdraw such authority upon termination of his employment or other association with the firm. Notice of the withdrawal of the authority of the transferee to trade on the membership owned by a clearing member *with shares,* Rule 106.J. equity member or affiliate firm must be given to his qualifying clearing member, and such clearing member must subsequently notify the Exchange pursuant to Rule 511.A. The clearing member *with shares,* Rule 106.J. equity member or affiliate firm shall designate on a form provided by the Exchange a representative who shall be authorized to deal with the Exchange with respect to the membership held under this Section.

The proceeds of the sale of a membership which is used to qualify a Rule 106.I. affiliate member firm shall be subject to Rule 110 claims against both the owner of the membership and the Rule 106.I. affiliate member firm.

A Rule 106.I. membership may not be transferred pursuant to any other provision of Rule 106. The membership may not be assigned for membership purposes under Rules *106.H.,* 106.J., *106.R., 106.S.* or 902.

Rule 106.I. firm benefits apply to the firm trading activity of any affiliate as defined in this Rule. All such positions

---

[11] 17 CFR 200.30–3(a)(12).

[1] 15 U.S.C. 78s(b)(1).

[2] 17 CFR 240.19b–4.

[3] 15 U.S.C. 78s(b)(3)(A).

[4] 17 CFR 240.19b–4(f)(4)(ii).

of the firm and its affiliates must be carried by a clearing member(s) in accounts separate from positions of subsidiaries, customers and other entities.

A Rule 106.I. affiliate member firm may not hold itself out to the public as a clearing member.

Exchange staff may grant exemptions from the requirements of this Rule.

* * *

Chapter 9. Clearing Members.

900.A. CME Clearing Members.

CME Clearing Members shall have all applicable rights, responsibilities and privileges attendant thereto, subject to the provisions of these rules and shall be qualified to clear transactions for all CME products and all Expanded-Access Products listed for trading by CBOT after July 12, 2007.

CME Clearing Members receive fees in conjunction with CME Rule 106.H. Trading Member Firms. CME Clearing Members with shares are those clearing members that maintain CME Group Class A shares in accordance with CME Rule 106.J. Equity Member Firm requirements in order to receive equity member rates.

900.B. Financial Instrument Clearing Members.

A Financial Instrument Clearing Member (''FICM'') shall have the right to clear, for its own account, trades in certain CME and CBOT interest rate products executed in connection with a cash versus futures trading strategy.

The FICM must be guaranteed by a CME and/or CBOT Clearing Member that is entitled to clear all of the products cleared by the FICM. The guarantor must be the clearing member for the FICM's transactions in U.S. Treasury Securities and report to the Clearing House, at appropriate intervals, the FICM's open positions in U.S. Treasury Securities. The guarantor shall assume complete responsibility for all of the FICM's obligations to the Exchange and Clearing House arising from its operations as a FICM. In the event of a default by the FICM to the Clearing House in respect of any futures or options on futures, the FICM shall be suspended by the Exchange and the open positions of the FICM shall be transferred to, owned by, and become the direct responsibility of the guarantor. In the event of a default by the FICM or a related entity to the guarantor clearing firm, the Exchange will, at the request of the guarantor clearing firm, and upon due verification of the facts, facilitate the suspension of the FICM, in which case the open positions of the FICM shall be transferred to, owned by, and become the direct responsibility of the guarantor.

The FICM shall be subject to applicable CME and CBOT Rules, including those contained in CME and CBOT Rules Chapter 8 and Chapter 9, and including without limitation, CME Rule 802 (Protection of the Clearing House, including the primary responsibility for the Clearing House assessment obligation therein). The FICM shall comply with all of the requirements and obligations of a clearing member pursuant to CME Rule 901 (General Requirements and Obligations) with the exception of the parent guarantee requirement pursuant to CME 901(L). The FICM must satisfy the following requirements:

(i) Adjusted Net Capital of $500,000;

(ii) Initial minimum guaranty fund deposit of $50,000 to be increased to reflect transaction volume, open interest and risk;

(iii) The assignment of one Full or two Associate Memberships [and 4,000 CME Group shares] for the privilege of clearing CBOT interest rate products and two CME, two IMM, two IOM, *and* one GEM *membership* [and 6000 CME Group shares] for the privilege of clearing CME interest rate products. [The CME Group share requirement for FICMs eligible to clear both CBOT and CME interest rate products is 7,750 shares.] Memberships [and shares] may be independently assigned.

(iv) *FICMs receive fees in conjunction with CME and/or CBOT Rule 106.H. Trading Member Firms as applicable. FICMs that maintain CME Group Class A shares in accordance with CME Rule 106.J. Equity Member Firm requirements are eligible to receive equity member rates.* The applicant shall be engaged in or demonstrate immediate capacity to engage in U.S. Treasury/interest rate futures spread trades and in order to maintain the status of a FICM, shall actively execute both sides of U.S. Treasury/interest rate futures spread trades.

A FICM applicant shall execute and place on file with the Exchange the following documents:

(v) An application for the FICM clearing membership;

(vi) Globex System access documentation;

(vii) Settlement bank account documents to permit the Clearing House to collect and disperse monies directly to the FICM;

(viii) An acknowledgement from the guarantor that it agrees to guarantee the performance and financial obligations of the FICM to the Clearing House for certain identified interest rate products;

(ix) Authorization to the Clearing House to verify, at its discretion, the transactions and open positions of the FICM in U.S. Treasury Securities;

(x) Authorization to the Clearing House to deliver the FICM's trade register and recap ledger to the FICM's Clearing Member guarantor;

(xi) A Clearing Member and FICM authorization pursuant to which the Clearing Member/guarantor will be authorized to submit complete and accurate transaction and position information respecting the U.S. Treasury Securities of the FICM to the Clearing House; and

(xii) Any additional documents or information requested by the Clearing House for risk management purposes.

Exchange staff may grant exceptions to the requirements of Rule 900.[C]*B* for good cause if it is determined that such exceptions will not jeopardize the financial integrity of the Exchange.

II. Self-Regulatory Organization's Statement of Purpose of, and Statutory Basis for, the Proposed Rule Change

In its filing with the Commission, CME included statements concerning the purpose and basis for the proposed rule change and discussed any comments it received on the proposed rule change. The text of these statements may be examined at the places specified in Item IV below. CME has prepared summaries, set forth in sections A, B, and C below, of the most significant aspects of such statements.

A. Self-Regulatory Organization's Statement of Purpose of, and Statutory Basis for, the Proposed Rule Change

The financial-safeguards package that has historically applied to CME's futures market has used the value of memberships and shares to comprise a significant portion of the assets available to CME Clearing in a clearing member default situation. Recent enhancements to CME's financial-safeguards package significantly increased the amount of the guaranty-fund deposits available to CME Clearing. These changes also included amendments to make CME Group shares a much smaller portion of the total assets available to CME Clearing in a default scenario. Most recently, on May 13, 2011, CME determined to eliminate the CME Group share assignment requirement entirely from the requirements that apply to a CME clearing membership.

Notwithstanding these recent changes to the clearing membership requirements, the proprietary trading exchange fee requirements that apply to the futures trading activities of a CME

clearing member that maintains CME Group shares are different than those that apply to a CME clearing member that does not. The purpose of the proposed rule change in this filing is to make clarifying revisions to the CME rulebook to more accurately reflect these fee differentials. The rule changes affecting the CME rulebook are included in File No. SR–CME–2011–02.

CME notes that it submitted the rule changes that are the subject of this filing to its primary regulator, the Commodity Futures Trading Commission (''CFTC''), in a separate filing.[5] This filing also included corresponding changes to the rulebook of its affiliated exchanges, The Board of Trade of the City of Chicago, Inc. (''CBOT'') and New York Mercantile Exchange, Inc. (''NYMEX'').

The text of the CME rule proposed amendments is in Section I of this notice, with additions underlined and deletions in brackets. The proposed effective date for these rule amendments is August 12, 2011 (*i.e.,* ten business days after the date of CME's submission to the CFTC).[6]

The proposed CME rule amendments do not significantly affect the securities clearing operations of CME or any related rights or obligations of CME clearing members. The proposed rule changes are intended to clarify the application of certain proprietary trading exchange fees to a CME clearing member that maintains CME shares and to those that do not. These changes do not affect CME's credit default swap clearing activities in any significant way. As such, the proposed rule change is properly filed under Section 19(b)(3)(A)[7] and Rule 19b–4(f)(4)(ii)[8] thereunder because it effects a change in an existing service of a registered clearing agency that primarily affects the futures clearing operations of the clearing agency with respect to futures that are not security futures and does not significantly affect any securities clearing operations of the clearing agency or any related rights or obligations of the clearing agency or persons using such service.

B. Self-Regulatory Organization's Statement on Burden on Competition

CME does not believe that the proposed rule change will have any impact, or impose any burden, on competition.

C. Self-Regulatory Organization's Statement on Comments on the Proposed Rule Change Received From Members, Participants, or Others

CME has not solicited, and does not intend to solicit, comments regarding this proposed rule change. CME has not received any unsolicited written comments from interested parties.

III. Date of Effectiveness of the Proposed Rule Change and Timing for Commission Action

The foregoing rule change was filed pursuant to Section 19(b)(3)(A)[9] of the Act and paragraph (f)(4)(ii) of Rule 19b–4[10] became effective on August 12, 2011, the same date CME's corresponding filing with the CFTC became effective. At any time within sixty days of the filing of such rule change, the Commission summarily may temporarily suspend such rule change if it appears to the Commission that such action is necessary or appropriate in the public interest, for the protection of investors, or otherwise in furtherance of the purposes of the Act.

IV. Solicitation of Comments

Interested persons are invited to submit written data, views and arguments concerning the foregoing, including whether the proposed rule change is consistent with the Act. Comments may be submitted by any of the following methods:

- Electronic comments may be submitted by using the Commission's Internet comment form (*http://www.sec.gov/rules/sro.shtml*), or send an e-mail to *rule-comments@sec.gov.* Please include File No. SR–CME–2011–02 on the subject line.
- Paper comments should be sent in triplicate to Elizabeth M. Murphy, Secretary, Securities and Exchange Commission, 100 F Street, NE., Washington, DC, 20549–1090.

All submissions should refer to File Number SR–CME–2011–02. This file number should be included on the subject line if e-mail is used. To help the Commission process and review your comments more efficiently, please use only one method. The Commission will post all comments on the Commission's Internet Web site (*http://www.sec.gov/rules/sro.shtml*). Copies of the submission, all subsequent amendments, all written statements with respect to the proposed rule change that are filed with the Commission, and all written communications relating to the proposed rule change between the Commission and any person, other than those that may be withheld from the public in accordance with the provisions of 5 U.S.C. 552, will be available for Web site viewing and printing in the Commission's Public Reference Room, 100 F Street, NE., Washington, DC 20549. Copies of such filing also will be available for inspection and copying at the principal office of CME. All comments received will be posted without change; the Commission does not edit personal identifying information from submissions. You should submit only information that you wish to make available publicly. All submissions should refer to File Number SR–CME–2011–02 and should be submitted on or before September 21, 2011.

For the Commission by the Division of Trading and Markets, pursuant to delegated authority.[11]

Elizabeth M. Murphy,

Secretary.

[FR Doc. 2011–22223 Filed 8–30–11; 8:45 am]

BILLING CODE 8011–01–P

[5] CME submitted its filing to the CFTC pursuant to CFTC Regulation 40.6 on July 28, 2011 with a proposed effective date of August 12, 2011 relating to the following CME Group rules: CME and CBOT Rule 106.I. (Affiliate Member Firm), CME Rules 900.A. (CME Clearing Members) and 900.B. (Financial Instrument Clearing Member), CBOT Rules 900 (Categories of Clearing Members) and 901 (General Requirements and Obligations), and NYMEX Rule 900.A. (NYMEX Clearing Members).

[6] The Commission notes that the proposed rule change became effective upon filing under Section 19(b)(3)(A) of the Act. CME's statement indicates that the proposed rule change, which became effective on August 12, 2011, became operative that same day.

[7] *Supra* note 3.

[8] *Supra* note 4.

[9] *Supra* note 3.

[10] *Supra* note 4.

[11] 17 CFR 200.30–3(a)(12).

SECURITIES AND EXCHANGE COMMISSION

[Release No. 34–65199; File No. SR–BX–2011–045]

Self-Regulatory Organizations; NASDAQ OMX BX, Inc.; Order Approving a Proposed Rule Change Requesting Permanent Approval of the Pilot Program Permitting BOX To Accept Inbound Routes by NOS

August 25, 2011.

I. Introduction

On July 13, 2011, NASDAQ OMX BX, Inc. (''BX'' or ''Exchange'') filed with the Securities and Exchange Commission (''Commission''), pursuant to Section 19(b)(1) of the Securities Exchange Act of 1934 (''Act'')[1] and Rule 19b–4 thereunder,[2] a proposed rule change requesting permanent approval of the Exchange's pilot program to permit the Boston Options Exchange (''BOX'') to accept certain inbound orders that

[1] 15 U.S.C. 78s(b)(1).

[2] 17 CFR 240.19b–4.

Nasdaq Options Services, LLC (''NOS'') routes from Nasdaq Options Market (''NOM''). The proposed rule change was published for comment in the **Federal Register** on July 20, 2011.[3] The Commission received no comment letters regarding the proposed rule change. This order approves the proposed rule change.

II. Background

BOX is an options trading facility of the Exchange under Section 3(a)(2) of the Act.[4] Chapter XXXIX, Section 2 of the Grandfathered Rules of the Exchange prohibits the Exchange or any entity with which it is affiliated from acquiring or maintaining an ownership interest in a member in the absence of an effective filing under Section 19(b) of the Act.[5] NOS is a broker-dealer that is a member of the Exchange, and currently provides to members of the Nasdaq Stock Market LLC (''Nasdaq'') that are NOM participants optional routing services to other market centers.[6] NOS is owned by The NASDAQ OMX Group, Inc. (''NASDAQ OMX''), which also owns three registered securities exchanges—Nasdaq, the Exchange, and NASDAQ OMX PHLX LLC.[7] Thus, NOS is an affiliate of each of these exchanges. Absent an effective filing, Chapter XXXIX, Section 2 of the Grandfathered Rules of the Exchange would prohibit NOS from being a member of the Exchange.

On August 7, 2008, in connection with the acquisition of the Exchange by NASDAQ OMX, the Commission approved an affiliation between the Exchange and NOS for the limited purpose of permitting NOS to provide routing services for Nasdaq for orders that first attempt to access liquidity on Nasdaq's system before routing to the Exchange, subject to certain other limitations and conditions.[8] On July 17, 2009, the Exchange filed an immediately effective proposed rule change to modify the conditions for the affiliation between NOS and the Exchange, to permit the Exchange to receive certain orders routed by NOS from NOM without first checking the NOM book for liquidity on a one-year pilot basis.[9] Specifically, the Exchange proposed to permit NOS to route from NOM Exchange Direct Orders and orders in NOM Non-System Securities (including Exchange Direct Orders).[10] The Exchange now seeks permanent approval of this inbound routing pilot.[11]

III. Discussion and Commission Findings

After careful review, the Commission finds that the proposed rule change is consistent with the requirements of the Act and the rules and regulations thereunder applicable to a national securities exchange.[12] Specifically, the Commission finds that the proposed rule change is consistent with Section 6(b)(1) of the Act,[13] which requires, among other things, that a national securities exchange be so organized and have the capacity to carry out the purposes of the Act, and to comply and enforce compliance by its members and persons associated with its members, with the provisions of the Act, the rules and regulation thereunder, and the rules of the Exchange. Further, the Commission finds that the proposed rule change is consistent with Section 6(b)(5) of the Act,[14] which requires, among other things, that the rules of a national securities exchange be designed to prevent fraudulent and manipulative acts and practices; to promote just and equitable principles of trade; to foster cooperation and coordination with persons engaged in regulating, clearing, settling, and processing information with respect to, and facilitating transactions in securities; to remove impediments to and perfect the mechanism of a free and open market and a national market system; and, in general, to protect investors and the public interest. Section 6(b)(5) also requires that the rules of an exchange not be designed to permit unfair discrimination among customers, issuers, brokers, or dealers.

Recognizing that the Commission has previously expressed concern regarding the potential for conflicts of interest in instances where a member firm is affiliated with an exchange of which it is a member, the Exchange previously proposed, and the Commission approved, limitations and conditions on NOS's affiliation with the Exchange.[15] Also recognizing that the Commission has expressed concern regarding the potential for conflicts of interest in instances where a member firm is affiliated with an exchange to which it is routing orders, the Exchange previously implemented limitations and conditions to NOS's affiliation with the Exchange to permit the Exchange to accept orders routed inbound to BOX by NOS from NOM that do not first attempt to access liquidity on the NOM book.[16] The Exchange states it has met these conditions:[17]

- First, the Exchange and FINRA have entered into a Regulatory Contract. Pursuant to the Regulatory Contract, FINRA has been allocated regulatory responsibilities to review NOS's compliance with BOX's rules through FINRA's examination program.[18] Also

[3] *See* Securities Exchange Act Release No. 64896 (July 15, 2011), 76 FR 43740 (''Notice'').

[4] *See* Chapter 1, Section 1(a)(6) of the Rules of the Boston Options Exchange Group LLC. *See also* Securities Exchange Act Release No. 60349 (July 20, 2009), 74 FR 37071 (July 27, 2009) (SR–BX–2009–035) (''BOX Routing Pilot Release'').

[5] 15 U.S.C. 78s(b).

[6] NOS operates as a facility of Nasdaq that provides outbound routing from NOM to other market centers, subject to certain conditions. *See* NOM Rules Chapter VI, Section 11(e). *See also* BOX Routing Pilot Release, 74 FR at 37071.

[7] *See* Securities Exchange Act Release No. 58324 (August 7, 2008), 73 FR 46936 (August 12, 2008) (SR–BSE–2008–02; SR–BSE–2008–23; SR–BSE–2008–25; SR–BSECC–2008–01) (''BSE Approval Order''). *See also* Securities Exchange Act Release No. 58179 (July 17, 2008), 73 FR 42874 (July 23, 2008) (order approving NASDAQ OMX's acquisition of Phlx.)

NASDAQ OMX acquired the Exchange in August 2008. Prior to the acquisition, the Exchange owned a 21.87% interest in Boston Options Exchange Group, LLC (''BOX LLC''), the operator of BOX. Boston Options Exchange Regulation, LLC (''BOXR'') is a wholly-owned subsidiary of the Exchange, to which the Exchange has delegated, pursuant to a delegation plan, certain self-regulatory responsibilities related to BOX.

At the closing of the acquisition by NASDAQ OMX, the Exchange transferred its interest in BOX LLC to MX US, a wholly-owned subsidiary of the Montreal Exchange Inc. Although the Exchange no longer holds an ownership interest in BOX LLC, it continues to hold self-regulatory obligations with respect to BOX. The Exchange, together with BOXR, retains regulatory control over BOX, and the Exchange, as the SRO, remains responsible for ensuring compliance with the federal securities laws and all applicable rules and regulations.

NASDAQ OMX also currently indirectly owns NOS, a registered broker-dealer and a BOX market participant. Thus, NOS is deemed an affiliate of the Exchange, BOX and BOXR. *See* BOX Routing Pilot Release, 76 FR at 37071. *See also* BSE Approval Order, 76 FR 46936.

[8] *See* BSE Approval Order, 73 FR at 46944.

[9] *See* BOX Routing Pilot Release.

[10] NOS provides to NOM participants routing services to other market centers. Pursuant to Nasdaq's rules, NOS: (1) Routes orders in options currently trading on NOM, referred to as ''System Securities;'' and (2) routes orders in options that are not currently trading on NOM (''Non-System Securities''). *See* NOM Rules, Chapter VI, Section 1(b) and 11. When routing Non-System Securities, NOS is not regulated as a facility of Nasdaq, but as a broker-dealer regulated by its designated examining authority. *See also* BOX Routing Pilot Release, 74 FR at 37071. ''Exchange Direct Orders'' are orders that are directed to an exchange other than NOM as directed by the entering party without checking the NOM book. *See* NOM Rules Chapter VI, Section 1(e)(7).

[11] *See* Notice.

[12] In approving this proposed rule change, the Commission has considered the proposed rule's impact on efficiency, competition and capital formation. 15 U.S.C. 78c(f).

[13] 15 U.S.C. 78f(b)(1).

[14] 15 U.S.C. 78f(b)(5).

[15] *See* BSE Approval Order, 73 FR at 46944.

[16] *See* BOX Routing Pilot Release, 74 FR at 37072.

[17] *See* Notice, 76 FR at 43741.

[18] The Exchange also states that NOS is subject to independent oversight by FINRA, its Designated Examining Authority, for compliance with financial responsibility requirements. *See* Notice, 76 FR at 43740, n.8.

pursuant to the Regulatory Contract, however, BX retains ultimate responsibility for enforcing its rules with respect to NOS, except to the extent they are covered by an agreement with FINRA pursuant to Rule 17d–2 under the Act (''17d–2 Agreement''),[19] in which case FINRA is allocated regulatory responsibility.

• Second, FINRA and BX will monitor NOS for compliance with the Exchange's trading rules, and will collect and maintain certain related information.[20]

• Third, FINRA will provide a report to the BOXR's chief regulatory officer (''CRO''), on a quarterly basis, that: (i) Quantifies all alerts (of which FINRA is aware) that identify NES as a participant that has potentially violated Commission or Exchange rules, and (ii) lists all investigations that identify NES as a participant that has potentially violated Commission or Exchange rules.[21]

• Fourth, the Exchange has adopted Chapter XXXIX, Section 2(c) of the Grandfathered Rules of the Exchange, which requires NASDAQ OMX, as the holding company owning NOS and affiliated with BOX through the ownership of the Exchange, to establish and maintain procedures and internal controls reasonably designed to ensure that NOS does not develop or implement changes to its system, based on non-public information obtained regarding planned changes to the Exchange's systems as a result of its affiliation with the Exchange, until such information is available generally to similarly situated Exchange members, in connection with the provision of inbound order routing to the Exchange.[22]

• Fifth, NOS was authorized to route NOM Exchange Direct Orders without checking the NOM book, and orders in NOM non-system securities, inbound to the Exchange from NOM for a pilot period of twelve months, which was subsequently extended to September 15, 2011.[23]

The Exchange believes that by meeting the above-listed conditions it has set up mechanisms that protect the independence of the Exchange's regulatory responsibility with respect to NOS, and has demonstrated that NOS cannot use any information advantage it may have because of its affiliation with the Exchange.[24]

In the past, the Commission has expressed concern that the affiliation of an exchange with one of its members raises potential conflicts of interest, and the potential for unfair competitive advantage.[25] Although the Commission continues to be concerned about potential unfair competition and conflicts of interest between an exchange's self-regulatory obligations and its commercial interest when the exchange is affiliated with one of its members, for the reasons discussed below, the Commission believes that it is consistent with the Act to permit NOS to provide inbound routing to the Exchange on a permanent basis instead of a pilot basis, subject to the other conditions described above.

The Exchange has proposed four ongoing conditions applicable to NOS's routing activities, which are enumerated above. The Commission believes that these conditions mitigate its concerns about potential conflicts of interest and unfair competitive advantage. In particular, the Commission believes that FINRA's oversight of NOS,[26] combined with FINRA's monitoring of NOS's compliance with BOX's rules and quarterly reporting to the BOXR's CRO, will help to protect the independence of the Exchange's regulatory responsibilities with respect to NOS. The Commission also believes that Chapter XXXIX, Section 2(c) of the Exchange's Grandfathered Rules is designed to ensure that NOS cannot use any information advantage it may have because of its affiliation with the Exchange.

IV. Conclusion

It Is Therefore Ordered, pursuant to Section 19(b)(2) of the Act,[27] that the proposed rule change (SR–BX–2011–045) be, and hereby is, approved.

For the Commission, by the Division of Trading and Markets, pursuant to delegated authority.[28]

Elizabeth M. Murphy,

Secretary.

[FR Doc. 2011–22221 Filed 8–30–11; 8:45 am]

BILLING CODE 8011–01–P

[19] 17 CFR 240.17d–2.

[20] Pursuant to the Regulatory Contract, both FINRA and the Exchange will collect and maintain all alerts, complaints, investigations and enforcement actions in which NOS (in its capacity as a facility of Nasdaq routing orders to BOX) is identified as a participant that has potentially violated applicable Commission or Exchange rules. The Exchange and FINRA will retain these records in an easily accessible manner in order to facilitate any potential review conducted by the Commission's Office of Compliance Inspections and Examinations. *See* Notice, 76 FR at 43741, n.10.

[21] *See id.*

[22] *See* chapter XXXIX, Section 2(c) of the Grandfathered Rules of the Exchange. *See also* Notice, 76 FR at 43741.

[23] *See* Notice, 76 FR at 43741. *See also* Securities Exchange Act Release No. 65177 (August 19, 2011) (SR–BX–2011–058). The Commission notes that the original pilot period of twelve months began on August 16, 2009, but was extended several times. *See* Notice, 76 FR at 43740, n.5.; and SR–BX–2011–058, *supra.*

[24] *See* BOX Routing Pilot Release, 76 FR at 43741.

[25] *See, e.g.,* Securities Exchange Act Release Nos. 54170 (July 18, 2006), 71 FR 42149 (July 25, 2006) (SR–NASDAQ–2006–006) (order approving Nasdaq's proposal to adopt Nasdaq Rule 2140, restricting affiliations between Nasdaq and its members); 53382 (February 27, 2006), 71 FR 11251 (March 6, 2006) (SR–NYSE–2005–77) (order approving the combination of the New York Stock Exchange, Inc. and Archipelago Holdings, Inc.); 58673 (September 29, 2008), 73 FR 57707 (October 8, 2008) (SR–Amex–2008–62) (order approving the combination of NYSE Euronext and the American Stock Exchange LLC); 59135 (December 22, 2008), 73 FR 79954 (December 30, 2008) (SR–ISE–2009–85) (order approving the purchase by ISE Holdings of an ownership interest in DirectEdge Holdings LLC); and 59281 (January 22, 2009), 74 FR 5014 (January 28, 2009) (SR–NYSE–2008–120) (order approving a joint venture between NYSE and BIDS Holdings L.P.).

[26] This oversight will be accomplished through the Regulatory Contract between the Exchange and FINRA, and, as applicable, a 17d–2 Agreement.

[27] 15 U.S.C. 78s(b)(2).

[28] 17 CFR 200.30–3(a)(12).

SECURITIES AND EXCHANGE COMMISSION

[Release No. 34–65195; File No. SR–Phlx–2011–117]

Self-Regulatory Organizations; NASDAQ OMX PHLX LLC; Notice of Filing and Immediate Effectiveness of Proposed Rule Change Relating to the Active SQF Port Fee and the Order Entry Port Fee

August 25, 2011.

Pursuant to Section 19(b)(1) of the Securities Exchange Act of 1934 (''Act''),[1] and Rule 19b–4 [2] thereunder, notice is hereby given that, on August 12, 2011, NASDAQ OMX PHLX LLC (''Phlx'' or ''Exchange'') filed with the Securities and Exchange Commission (''SEC'' or ''Commission'') the proposed rule change as described in Items I, II, and III below, which Items have been prepared by the Exchange. The Commission is publishing this notice to solicit comments on the proposed rule change from interested persons.

I. Self-Regulatory Organization's Statement of the Terms of Substance of the Proposed Rule Change

The Exchange proposes to amend the Exchange's Fee Schedule to reflect that the Exchange will not assess a charge for the use of additional Active Specialized Quote Feed (''SQF'') Ports and Order Entry Ports in limited circumstances.

The text of the proposed rule change is available on the Exchange's Web site

[1] 15 U.S.C. 78s(b)(1).

[2] 17 CFR 240.19b–4.

at *http://nasdaqtrader.com/micro.aspx?id=PHLXRulefilings,* at the principal office of the Exchange, at the Commission's Public Reference Room, and on the Commission's Web site at *http://www.sec.gov.*

II. Self-Regulatory Organization's Statement of the Purpose of, and Statutory Basis for, the Proposed Rule Change

In its filing with the Commission, the Exchange included statements concerning the purpose of and basis for the proposed rule change and discussed any comments it received on the proposed rule change. The text of these statements may be examined at the places specified in Item IV below. The Exchange has prepared summaries, set forth in sections A, B, and C below, of the most significant aspects of such statements.

A. Self-Regulatory Organization's Statement of the Purpose of, and Statutory Basis for, the Proposed Rule Change

1. Purpose

The purpose of the proposed rule change is to allow member organizations to utilize additional Active SQF Ports and Order Entry Ports in very limited circumstances, at no additional charge, to accommodate member organizations that are attempting to colocate or otherwise change their technology and require extra ports during these transitions.[3] The Exchange is proposing this rule change to offset costs for member organizations that are transitioning technology and require additional ports as back-up ports only while the transition is occurring.

Specifically, the Exchange would not assess the Active SQF Port Fee or the Order Entry Port Fee on member organizations for the use of additional Active SQF Ports and/or Order Entry Ports for ten (10) business days in the following limited circumstances where a member organization is: (i) Colocating to another facility; or (ii) changing technology. The member organization would be required to provide the Exchange with written notification of the date it would commence the transition and the number of additional Active SQF Ports and/or Order Entry Ports that it would require during the transition. The member organization would not be assessed a fee for the use of additional Active SQF Ports and/or Order Entry Ports for the ten business days. If the member organization required additional ports beyond the ten business day period, it would be assessed the applicable monthly fee for the applicable ports.[4] The member organization would continue to be assessed Active SQF Port Fees and Order Entry Port Fees for the ports that it requested, and the Exchange provided to it, prior to the transition.[5]

For example, a member organization that was utilizing three Order Entry Ports on a monthly basis, notified the Exchange that it would be updating its technology and required use of four additional Order Entry Ports for a ten day period (from September 2, 2011, through September 15, 2011), and completed its transition in ten business days (by September 15, 2011) would only be assessed the Order Entry Port Fee, as applicable, for three Order Entry Ports. If the same member organization, using the same facts, notified the Exchange that it required use of the four additional Order Entry Ports for more than ten business days (beyond September 15, 2011), the Exchange would assess that member organization the Order Entry Port Fee, as applicable, for all seven ports, the three original ports and the four additional ports.

The Exchange currently has a tiered Active SQF Port Fee as follows:

Number of active SQF ports	Cost per port per month
0–4	$350
5–18	1,250
19–40	2,350
41 and over	3,000

Active SQF ports refer to ports that receive inbound quotes at any time within that month. SQF is an interface that enables specialists, Streaming Quote Traders (''SQTs'') and Remote Streaming Quote Traders (''RSQTs'') to connect and send quotes into Phlx XL. Active SQF Port Fees are capped at $500 per month for member organizations that are (i) Phlx Only Members;[6] and (ii) have 50 or less SQT assignments affiliated with their member organization.[7]

The Exchange currently assesses an Order Entry Port Fee of $500 per month per mnemonic.[8] The Order Entry Port Fee is a connectivity fee assessed on member organizations in connection with routing orders to the Exchange via an external order entry port. Member organizations access the Exchange's network through order entry ports. A member organization may have more than one order entry port.

The Exchange proposes to add text to the Fee Schedule at Section VI entitled ''Access Service, Cancellation, Membership, Regulatory and Other Fees'' to indicate that: There will be no cost for additional Active SQF Ports or Order Entry Ports[9] acquired for ten business days in connection with a technology transition; notification is required to the Exchange concerning the transition; and the additional ports will be removed from the system at the end of the ten business days.

2. Statutory Basis

The Exchange believes that its proposal to amend its Fee Schedule is consistent with Section 6(b) of the Act[10] in general, and furthers the objectives of Section 6(b)(4) of the Act[11] in particular, in that it is an equitable allocation of reasonable fees and other charges among Exchange members and other persons using its facilities.

The Exchange believes that its proposal to not assess an Active SQF Port Fee or Order Entry Port Fee for ten business days where a member organization is transitioning technology is reasonable because the Exchange is seeking to accommodate member organizations by not assessing fees for additional ports related to the technology transition. The Exchange believes that ten days is ample time for member organizations to receive additional services at no cost. The Exchange believes this accommodation will assist member organizations in

[3] Members require extra ports during certain technology transitions to ensure that they have functioning ports if they experience difficulties during the transition and need to send messages.

[4] Member organizations would be required to contact the Exchange to retain ports beyond the ten business day period as the Exchange intends to remove additional ports acquired at no cost once the ten day business day period has ended.

[5] A member organization is required to complete a form in the manner prescribed by the Exchange in order to acquire access to Active SQF Ports or Order Entry Ports.

[6] For purposes of the Active SQF Port Fee, a Phlx Only Member is a Phlx member that is not a member or member organization of another national securities exchange.

[7] Active SQF Port Fees are capped at $40,000 per month (''Cap'') until December 30, 2011 for all member organizations other than those member organizations who meet the requirements of the $500 per month cap.

[8] The Order Entry Port Fee is waived for mnemonics that are used exclusively for complex orders where one of the components of the complex order is the underlying security. The fee is assessed regardless of usage, and solely on the number of order entry ports assigned to each member organization.

[9] The additional ports refer to the ports that were acquired at no cost for ten business days. As previously mentioned, ports that were utilized by the member organization prior to the transition will continue to be assessed the current fees.

[10] 15 U.S.C. 78f(b).

[11] 15 U.S.C. 78f(b)(4).

effectively and efficiently transitioning technology and avoiding interruption to their business, which in turn benefits the market place.

The Exchange believes that this proposal is equitable and not unfairly discriminatory because the Exchange is offering the additional ports at no charge to all member organizations that transition technology. These member organizations who would receive the additional ports at no costs are being offered these services because they are in a special circumstance, a transition of technology, and this proposal would prevent additional extraordinary costs related to the transition.

B. Self-Regulatory Organization's Statement on Burden on Competition

The Exchange does not believe that the proposed rule change will impose any burden on competition not necessary or appropriate in furtherance of the purposes of the Act.

C. Self-Regulatory Organization's Statement on Comments on the Proposed Rule Change Received From Members, Participants, or Others

No written comments were either solicited or received.

III. Date of Effectiveness of the Proposed Rule Change and Timing for Commission Action

The foregoing rule change has become effective pursuant to Section 19(b)(3)(A)(ii) of the Act.[12] At any time within 60 days of the filing of the proposed rule change, the Commission summarily may temporarily suspend such rule change if it appears to the Commission that such action is necessary or appropriate in the public interest, for the protection of investors, or otherwise in furtherance of the purposes of the Act. If the Commission takes such action, the Commission shall institute proceedings to determine whether the proposed rule should be approved or disapproved.

IV. Solicitation of Comments

Interested persons are invited to submit written data, views, and arguments concerning the foregoing, including whether the proposed rule change is consistent with the Act. Comments may be submitted by any of the following methods:

Electronic Comments

- Use the Commission's Internet comment form (*http://www.sec.gov/rules/sro.shtml*); or
- Send an e-mail to *rule-comments@sec.gov.* Please include File Number SR–Phlx–2011–117 on the subject line.

Paper Comments

- Send paper comments in triplicate to Elizabeth M. Murphy, Secretary, Securities and Exchange Commission, 100 F Street, NE., Washington, DC 20549–1090.

All submissions should refer to File Number SR–Phlx–2011–117. This file number should be included on the subject line if e-mail is used. To help the Commission process and review your comments more efficiently, please use only one method. The Commission will post all comments on the Commission's Internet Web site (*http://www.sec.gov/rules/sro.shtml*). Copies of the submission, all subsequent amendments, all written statements with respect to the proposed rule change that are filed with the Commission, and all written communications relating to the proposed rule change between the Commission and any person, other than those that may be withheld from the public in accordance with the provisions of 5 U.S.C. 552, will be available for Web site viewing and printing in the Commission's Public Reference Room, 100 F Street, NE., Washington, DC 20549, on official business days between the hours of 10 a.m. and 3 p.m. Copies of the filing also will be available for inspection and copying at the principal office of the Exchange. All comments received will be posted without change; the Commission does not edit personal identifying information from submissions. You should submit only information that you wish to make available publicly. All submissions should refer to File Number SR–Phlx–2011–117 and should be submitted on or before September 21, 2011.

For the Commission, by the Division of Trading and Markets, pursuant to delegated authority.[13]

Elizabeth M. Murphy,

Secretary.

[FR Doc. 2011–22219 Filed 8–30–11; 8:45 am]

BILLING CODE 8011–01–P

[12] 15 U.S.C. 78s(b)(3)(A)(ii).

[13] 17 CFR 200.30–3(a)(12).

SECURITIES AND EXCHANGE COMMISSION

[Release No. 34–65197; File No. SR–EDGX–2011–27]

Self-Regulatory Organizations; EDGX Exchange, Inc.; Notice of Filing and Immediate Effectiveness of Proposed Rule Change To Amend EDGX Rule 1.5(q)

August 25, 2011.

Pursuant to Section 19(b)(1) of the Securities Exchange Act of 1934 (''Act'')[1] and Rule 19b–4 thereunder,[2] notice is hereby given that, on August 19, 2011, EDGX Exchange, Inc. (the ''Exchange'' or ''EDGX'') filed with the Securities and Exchange Commission (''Commission'') the proposed rule change as described in Items I and II below, which Items have been prepared by the self-regulatory organization. The Commission is publishing this notice to solicit comments on the proposed rule change from interested persons.

I. Self-Regulatory Organization's Statement of the Terms of Substance of the Proposed Rule Change

EDGX Exchange, Inc. (''EDGX'' or the ''Exchange''), proposes to amend EDGX Rule 1.5(q) to change the starting time of the Pre-Opening Session from 8 a.m. Eastern Time (''ET'') to 7 a.m. E.T. The text of the proposed rule change is attached as Exhibit 5 and is available on the Exchange's Web site at *http://www.directedge.com,* at the Exchange's principal office, and at the Public Reference Room of the Commission.

II. Self-Regulatory Organization's Statement of the Purpose of, and Statutory Basis for, the Proposed Rule Change

In its filing with the Commission, the Exchange included statements concerning the purpose of, and basis for, the proposed rule change and discussed any comments it received on the proposed rule change. The text of these statements may be examined at the places specified in Item IV below. The self-regulatory organization has prepared summaries, set forth in Sections A, B and C below, of the most significant aspects of such statements.

A. Self-Regulatory Organization's Statement of the Purpose of, and Statutory Basis for, the Proposed Rule Change

1. Purpose

The purpose of this filing is to amend EDGX Rule 1.5(q) to change the starting

[1] 15 U.S.C. 78s(b)(1).

[2] 17 CFR 240.19b–4.

time of the Pre-Opening Session from 8 a.m. ET to 7 a.m. ET. A conforming amendment is also made to Rule 14.1(c)(2) to change the reference for the start time of the Pre-Opening Session from 9 a.m.[3] to 7 a.m.

The Exchange is a fully electronic system that accommodates diverse business models and trading preferences. The Exchange utilizes technology to aggregate and display liquidity and make it available for execution of orders. The Exchange is proposing to expand its operational hours to open the System[4] earlier so that firms can enter orders and execute beginning at 7 a.m. rather than 8 a.m. This change will allow the Exchange to compete with other exchanges that open their markets for entry of orders prior to 8 a.m.[5]

The Exchange will provide notice to members in an information circular when this proposed rule change will be effective, which date will be no later than January 1, 2012.

2. Statutory Basis

The Exchange believes that the proposed rule change is consistent with the provisions of Section 6 of the Act,[6] in general, and with Sections 6(b)(1) and 6(b)(5) of the Act,[7] in particular, in that the proposal enables the Exchange to be so organized as to have the capacity to be able to carry out the purposes of the Act and to comply with and enforce compliance by members, member organizations, and persons associated with members and member organizations with provisions of the Act, the rules and regulations thereunder, and the rules of the Exchange. The proposal is also consistent with Section 6 of the Act in that the proposal is designed to prevent fraudulent and manipulative acts and practices, to promote just and equitable principles of trade, to foster cooperation and coordination with persons engaged in regulating, clearing, settling, processing information with respect to, and facilitating transactions in, securities, to remove impediments to and perfect the mechanism of a free and open market and a national market system, and, in general, to protect investors and the public interest. An earlier opening time will enhance the national market system by providing market participants increased opportunity to more effectively carry out the execution of orders in the manner addressed by Exchange rules. Such improvements will enhance the protection of investors and the public interest.

B. Self-Regulatory Organization's Statement on Burden on Competition

The proposed rule change does not impose any burden on competition that is not necessary or appropriate in furtherance of the purposes of the Act.

C. Self-Regulatory Organization's Statement on Comments on the Proposed Rule Change Received From Members, Participants, or Others

The Exchange has not solicited, and does not intend to solicit, comments on this proposed rule change. The Exchange has not received any unsolicited written comments from members or other interested parties.

III. Date of Effectiveness of the Proposed Rule Change and Timing for Commission Action

Because the foregoing proposed rule change does not: (i) Significantly affect the protection of investors or the public interest; (ii) impose any significant burden on competition; and (iii) become operative for 30 days from the date on which it was filed, or such shorter time as the Commission may designate, it has become effective pursuant to 19(b)(3)(A) of the Act[8] and Rule 19b–4(f)(6)[9] thereunder.

At any time within 60 days of the filing of the proposed rule change, the Commission summarily may temporarily suspend such rule change if it appears to the Commission that such action is necessary or appropriate in the public interest, for the protection of investors, or otherwise in furtherance of the purposes of the Act.

IV. Solicitation of Comments

Interested persons are invited to submit written data, views, and arguments concerning the foregoing, including whether the proposed rule change is consistent with the Act. Comments may be submitted by any of the following methods:

Electronic Comments

- Use the Commission's Internet comment form (*http://www.sec.gov/rules/sro.shtml*); or
- Send an e-mail to *rule-comments@sec.gov.* Please include File Number SR–EDGX–2011–27 on the subject line.

Paper Comments

- Send paper comments in triplicate to Elizabeth M. Murphy, Secretary, Securities and Exchange Commission, 100 F Street, NE., Washington, DC 20549–1090.

All submissions should refer to File Number SR–EDGX–2011–27. This file number should be included on the subject line if e-mail is used. To help the Commission process and review your comments more efficiently, please use only one method. The Commission will post all comments on the Commission's Internet Web site (*http://www.sec.gov/rules/sro.shtml*). Copies of the submission, all subsequent amendments, all written statements with respect to the proposed rule change that are filed with the Commission, and all written communications relating to the proposed rule change between the Commission and any person, other than those that may be withheld from the public in accordance with the provisions of 5 U.S.C. 552, will be available for Web site viewing and printing in the Commission's Public Reference Room, 100 F Street, NE., Washington, DC 20549, on official business days between the hours of 10 a.m. and 3 p.m. Copies of such filing also will be available for inspection and copying at the principal office of the Exchange. All comments received will be posted without change; the Commission does not edit personal identifying information from submissions. You should submit only information that you wish to make available publicly. All submissions should refer to File Number SR–EDGX–2011–27 and should be submitted on or before September 21, 2011.

For the Commission, by the Division of Trading and Markets, pursuant to delegated authority.[10]

Elizabeth M. Murphy,

Secretary.

[FR Doc. 2011–22220 Filed 8–30–11; 8:45 am]

BILLING CODE 8011–01–P

[3] The Exchange notes that this rule currently contains an inaccurate reference to 9 a.m. as the beginning of the Pre-Opening Session.

[4] *See* EDGX Rule 1.5 (aa).

[5] *See* The NASDAQ Stock Market LLC Rule 4617 (opens at 7 a.m. E.S.T.). *See also* NASDAQ OMX BX Rule 4617 (opens at 7 a.m. E.S.T.); NYSE Arca Equities Rule 7.34 (opens at 1 a.m. Pacific Time).

[6] 15 U.S.C. 78f.

[7] 15 U.S.C. 78f(b)(1), (5).

[8] 15 U.S.C. 78s(b)(3)(A).

[9] 17 CFR 240.19b–4(f)(6). In addition, Rule 19b–4(f)(6) requires a self-regulatory organization to give the Commission written notice of its intent to file the proposed rule change at least five business days prior to the date of filing of the proposed rule change, or such shorter time as designated by the Commission. EDGX has satisfied this requirement.

[10] 17 CFR 200.30–3(a)(12).

DEPARTMENT OF STATE

[Public Notice: 7573]

30-Day Notice of Proposed Information Collections: Language Learning Survey Questions

ACTION: Notice of request for public comment and submission to OMB of proposed collection of information.

SUMMARY: The Department of State has submitted the following information collection requests to the Office of Management and Budget (OMB) for approval in accordance with the Paperwork Reduction Act of 1995.

- Title of Information Collection: Language Learning Programs: Pre Program Survey Questions
- OMB Control Number: None
- Type of Request: New collection
- Originating Office: Bureau of Educational and Cultural Affairs, Office of Policy and Evaluation, Evaluation Division (ECA/P/V)
- Form Number: SV2011–0024
- Respondents: American participants in ECA exchange programs that focus on critical language learning instruction.
- Estimated Number of Respondents: 1,400 annually
- Estimated Number of Responses: 1,400 annually
- Average Hours per Response: 10 minutes
- Total Estimated Burden: 233 hours annually
- Frequency: On occasion
- Obligation to Respond: Voluntary
- Title of Information Collection: Language Learning Programs: Post Program Survey Questions
- OMB Control Number: None
- Type of Request: New collection
- Originating Office: Bureau of Educational and Cultural Affairs, Office of Policy and Evaluation, Evaluation Division (ECA/P/V)
- Form Number: SV2011–0025
- Respondents: American participants in ECA exchange programs that focus on critical language learning instruction.
- Estimated Number of Respondents: 1,400 annually
- Estimated Number of Responses: 1,400 annually
- Average Hours per Response: 20 minutes
- Total Estimated Burden: 467 hours annually
- Frequency: On occasion
- Obligation to Respond: Voluntary
- Title of Information Collection: Language Learning Programs: Follow-up Program Survey Questions
- OMB Control Number: None
- Type of Request: New collection
- Originating Office: Bureau of Educational and Cultural Affairs, Office of Policy and Evaluation, Evaluation Division (ECA/P/V)
- Form Number: SV2011–0026
- Respondents: American participants in ECA exchange programs that focus on critical language learning instruction.
- Estimated Number of Respondents: 1,400 annually
- Estimated Number of Responses: 1,400 annually
- Average Hours per Response: 20 minutes
- Total Estimated Burden: 467 hours annually
- Frequency: On occasion
- Obligation to Respond: Voluntary

DATES: Submit comments to the Office of Management and Budget (OMB) for up to 30 days from August 31, 2011.

ADDRESSES: Direct comments to the Department of State Desk Officer in the Office of Information and Regulatory Affairs at the Office of Management and Budget (OMB). You may submit comments by the following methods:

- *E-mail: oira_submission@omb.eop.gov.* You must include the DS form number, information collection title, and OMB control number in the subject line of your message.
- *Fax:* 202–395–5806. Attention: Desk Officer for Department of State.

FOR FURTHER INFORMATION CONTACT: You may obtain copies of the proposed information collection and supporting documents from Michelle Hale, ECA/P/V, SA–5, C2 Floor, U.S. Department of State, Washington, DC 20522–0582, who may be reached on 202–632–6312 or at *HaleMJ2@state.gov.*

SUPPLEMENTARY INFORMATION: We are soliciting public comments to permit the Department to:

- Evaluate whether the proposed information collection is necessary to properly perform our functions.
- Evaluate the accuracy of our estimate of the burden of the proposed collection, including the validity of the methodology and assumptions used.
- Enhance the quality, utility, and clarity of the information to be collected.
- Minimize the reporting burden on those who are to respond,

Abstract of Proposed Collections

These information collections will allow ECA/P/V to conduct pre-program, post-program and follow-up surveys of exchange participants from various ECA exchange programs that are focused on critical foreign language learning instruction using pre-approved questions. For the purposes of this collection the respondents will be Americans who travel abroad on these programs. Collecting this data will allow ECA/P/V to help inform the overall effectiveness of ECA language learning programs, by gathering data to be used for program support, such as planning and design, as well as to help monitor the program's performance.

- Language Learning Programs: Pre Program Survey Questions: This collection will cover pre-program surveys.
- Language Learning Programs: Post Program Survey Questions: This collection will cover post program surveys.
- Language Learning Programs: Follow-up Program Survey Questions: This collection will cover follow-up program surveys.

Methodology

ECA/P/V estimates that 100% of the data collected through these information collections will be done so electronically via a Web-based surveying system for ease of use.

Additional Information:

These three collections together represent the full spectrum of the performance measurement process (*i.e.,* a pre-program, post-program, and follow-up program surveying), and data collected across these collections will be used to monitor ECA's language learning programs. The proposed questions have been designed to appear across these collections as appropriate, and therefore it is imperative that these questions remain unchanged so as to continue our vital performance measurement work.

Dated: August 23, 2011.

Julianne Paunescu,

Acting Director of the Office of Policy and Evaluation, Bureau of Educational and Cultural Affairs, Department of State.

[FR Doc. 2011–22324 Filed 8–30–11; 8:45 am]

BILLING CODE 4710–05–P

DEPARTMENT OF TRANSPORTATION

Federal Aviation Administration

Agency Information Collection Activities: Requests for Comments; Clearance of Renewed Approval of Information Collection: General Aviation Awards Program

AGENCY: Federal Aviation Administration (FAA), DOT.

ACTION: Notice and request for comments.

SUMMARY: In accordance with the Paperwork Reduction Act of 1995, FAA invites public comments about our intention to request the Office of Management and Budget (OMB) approval to renew an information collection. The **Federal Register** Notice with a 60-day comment period soliciting comments on the following collection of information was published on June 21, 2011, vol. 76, no. 119, page 36168. The collection is used to nominate private citizens for recognition of their significant voluntary contribution to aviation education and flight safety.

DATES: Written comments should be submitted by September 30, 2011.

FOR FURTHER INFORMATION CONTACT: Carla Scott on (202) 385–4293, or by e-mail at: *Carla.Scott@faa.gov.*

SUPPLEMENTARY INFORMATION: *OMB Control Number:* 2120–0574.

Title: General Aviation Awards Program.

Form Numbers: There are no FAA forms associated with this collection.

Type of Review: Renewal of an information collection.

Background: The collection is used to nominate private citizens for recognition of their significant voluntary contribution to aviation education and flight safety. The agency/industry committee uses the information collected to select eight regional winners and one national winner from each group. The respondents are private citizens involved in aviation.

Respondents: Approximately 150 applicants.

Frequency: Information is collected annually.

Estimated Average Burden per Response: 1 hour.

Estimated Total Annual Burden: 150 hours.

ADDRESSES: Interested persons are invited to submit written comments on the proposed information collection to the Office of Information and Regulatory Affairs, Office of Management and Budget. Comments should be addressed to the attention of the Desk Officer, Department of Transportation/FAA, and sent via electronic mail to *oira_submission@omb.eop.gov,* or faxed to (202) 395–6974, or mailed to the Office of Information and Regulatory Affairs, Office of Management and Budget, Docket Library, Room 10102, 725 17th Street, NW., Washington, DC 20503.

Public Comments Invited: You are asked to comment on any aspect of this information collection, including (a) Whether the proposed collection of information is necessary for FAA's performance; (b) the accuracy of the estimated burden; (c) ways for FAA to enhance the quality, utility and clarity of the information collection; and (d) ways that the burden could be minimized without reducing the quality of the collected information. The agency will summarize and/or include your comments in the request for OMB's clearance of this information collection.

Issued in Washington, DC, on August 22, 2011.

Carla Scott,

FAA Information Collection Clearance Officer, IT Enterprises Business Services Division, AES–200.

[FR Doc. 2011–22232 Filed 8–30–11; 8:45 am]

BILLING CODE 4910–13–P

DEPARTMENT OF TRANSPORTATION

Federal Aviation Administration

Agency Information Collection Activities: Requests for Comments; Clearance of Renewed Approval of Information Collection: Reduced Vertical Separation Minimum

AGENCY: Federal Aviation Administration (FAA), DOT.

ACTION: Notice and request for comments.

SUMMARY: In accordance with the Paperwork Reduction Act of 1995, FAA invites public comments about our intention to request the Office of Management and Budget (OMB) approval to renew an information collection. The **Federal Register** Notice with a 60-day comment period soliciting comments on the following collection of information was published on June 21, 2011, Vol. 76, No. 119, page 36171–36172. Aircraft operators seeking operational approval to conduct RVSM operations within the 48 contiguous United States (U.S.), Alaska and a portion of the Gulf of Mexico must submit an application to the Certificate Holding District Office.

DATES: Written comments should be submitted by September 30, 2011.

FOR FURTHER INFORMATION CONTACT: Carla Scott on (202) 385–4293, or by e-mail at: *Carla.Scott@faa.gov.*

SUPPLEMENTARY INFORMATION:

OMB Control Number: 2120–0679.

Title: Reduced Vertical Separation Minimum.

Form Numbers: There are no FAA forms associated with this collection.

Type of Review: Renewal of an information collection.

Background: The authority to collect data from aircraft operators seeking operational approval to conduct RVSM operations is contained in Part 91, Section 91.180. Aircraft operators seeking operational approval to conduct RVSM operations within the 48 contiguous States of the United States (U.S.), Alaska and that portion of the Gulf of Mexico where the FAA provides air traffic services must submit their application to the Certificate Holding District Office (CHDO).

Respondents: Approximately 370 operators.

Frequency: Information is collected on occasion.

Estimated Average Burden per Response: 30 hours.

Estimated Total Annual Burden: 11,100 hours.

ADDRESSES: Interested persons are invited to submit written comments on the proposed information collection to the Office of Information and Regulatory Affairs, Office of Management and Budget. Comments should be addressed to the attention of the Desk Officer, Department of Transportation/FAA, and sent via electronic mail to *oira_submission@omb.eop.gov,* or faxed to (202) 395–6974, or mailed to the Office of Information and Regulatory Affairs, Office of Management and Budget, Docket Library, Room 10102, 725 17th Street, NW., Washington, DC 20503.

Public Comments Invited: You are asked to comment on any aspect of this information collection, including (a) Whether the proposed collection of information is necessary for FAA's performance; (b) the accuracy of the estimated burden; (c) ways for FAA to enhance the quality, utility and clarity of the information collection; and (d) ways that the burden could be minimized without reducing the quality of the collected information. The agency will summarize and/or include your comments in the request for OMB's clearance of this information collection.

Issued in Washington, DC, on August 22, 2011.

Carla Scott,

FAA Information Collection Clearance Officer, IT Enterprises Business Services Division, AES–200.

[FR Doc. 2011–22251 Filed 8–30–11; 8:45 am]

BILLING CODE 4910–13–P

DEPARTMENT OF TRANSPORTATION

Federal Aviation Administration

Agency Information Collection Activities: Requests for Comments; Clearance of Renewed Approval of Information Collection: Rotorcraft External Load Operator Certificate Application

AGENCY: Federal Aviation Administration (FAA), DOT.

ACTION: Notice and request for comments.

SUMMARY: In accordance with the Paperwork Reduction Act of 1995, FAA invites public comments about our intention to request the Office of Management and Budget (OMB) approval to renew an information collection. The **Federal Register** Notice with a 60-day comment period soliciting comments on the following collection of information was published on June 21, 2011, Vol. 76, No. 119, page 36171. Information required from the public by 14 CFR part 133 is used by the FAA to process the operating certificate as a record of aircraft authorized for use, and to monitor Rotorcraft External-Load Operations.

DATES: Written comments should be submitted by September 30, 2011.

FOR FURTHER INFORMATION CONTACT: Carla Scott on (202) 385–4293, or by e-mail at: *Carla.Scott@faa.gov.*

SUPPLEMENTARY INFORMATION:

OMB Control Number: 2120–0044.

Title: Rotorcraft External Load Operator Certificate Application.

Form Numbers: FAA Form 8710–4.

Type of Review: Renewal of an information collection.

Background: The information required by 14 CFR Part 133 is used by the FAA to process the operating certificate as a record of aircraft authorized for use, and to monitor Rotorcraft External-Load Operations. FAA Form 8710–4, Rotorcraft External-Load Operator Certificate Application, provides a record of surveillance activities when completed by an inspector. If the information was not collected, FAA would not be able to meet its regulatory responsibilities under Part 133.

Respondents: Approximately 4,000 applicants.

Frequency: Information is collected on occasion.

Estimated Average Burden per Response: 2.26 hours.

Estimated Total Annual Burden: 3,268 hours.

ADDRESSES: Interested persons are invited to submit written comments on the proposed information collection to the Office of Information and Regulatory Affairs, Office of Management and Budget. Comments should be addressed to the attention of the Desk Officer, Department of Transportation/FAA, and sent via electronic mail to *oira_submission@omb.eop.gov,* or faxed to (202) 395–6974, or mailed to the Office of Information and Regulatory Affairs, Office of Management and Budget, Docket Library, Room 10102, 725 17th Street, NW., Washington, DC 20503.

Public Comments Invited: You are asked to comment on any aspect of this information collection, including (a) Whether the proposed collection of information is necessary for FAA's performance; (b) the accuracy of the estimated burden; (c) ways for FAA to enhance the quality, utility, and clarity of the information collection; and (d) ways that the burden could be minimized without reducing the quality of the collected information. The agency will summarize and/or include your comments in the request for OMB's clearance of this information collection.

Issued in Washington, DC, on August 22, 2011.

Carla Scott,

FAA Information Collection Clearance Officer, IT Enterprises Business Services Division, AES–200.

[FR Doc. 2011–22250 Filed 8–30–11; 8:45 am]

BILLING CODE 4910–13–P

DEPARTMENT OF TRANSPORTATION

Federal Aviation Administration

Agency Information Collection Activities: Requests for Comments; Clearance of Renewed Approval of Information Collection: Commercial Space Transportation Reusable Launch Vehicle and Reentry Licensing

AGENCY: Federal Aviation Administration (FAA), DOT.

ACTION: Notice and request for comments.

SUMMARY: In accordance with the Paperwork Reduction Act of 1995, FAA invites public comments about our intention to request the Office of Management and Budget (OMB) approval to renew an information collection. The **Federal Register** Notice with a 60-day comment period soliciting comments on the following collection of information was published on June 21, 2011, Vol. 76, No. 119, page 36168. The information is used to determine if applicants satisfy requirements for obtaining a launch license to protect the public from risks associated with reentry operations from a site not operated by or situated on a Federal launch range.

DATES: Written comments should be submitted by September 30, 2011.

FOR FURTHER INFORMATION CONTACT: Carla Scott on (202) 385–4293, or by e-mail at: *Carla.Scott@faa.gov.*

SUPPLEMENTARY INFORMATION:

OMB Control Number: 2120–0643.

Title: Commercial Space Transportation Reusable Launch Vehicle and Reentry Licensing Regulation.

Form Numbers: There are no FAA forms associated with this collection.

Type of Review: Renewal of an information collection.

Background: The data is necessary for a U.S. citizen to apply for and obtain a reusable launch vehicle (RLV) mission license or a reentry license for activities by commercial or non-federal entities (that are not done by or for the U.S. Government) as defined and required by 49 U.S.C., Subtitle IX, Chapter 701, formerly known as the Commercial Space Launch Act of 1984, as amended. The information is needed to demonstrate to the FAA Office of Commercial Space Transportation (FAA/AST) that the proposed activity meets applicable public safety, national security, and foreign policy interests of the United States.

Respondents: Approximately 6 applicants.

Frequency: Information is collected on occasion.

Estimated Average Burden per Response: 5,000 hours.

Estimated Total Annual Burden: 30,000 hours.

ADDRESSES: Interested persons are invited to submit written comments on the proposed information collection to the Office of Information and Regulatory Affairs, Office of Management and Budget. Comments should be addressed to the attention of the Desk Officer, Department of Transportation/FAA, and sent via electronic mail to *oira_submission@omb.eop.gov,* or faxed to (202) 395–6974, or mailed to the Office of Information and Regulatory Affairs, Office of Management and Budget, Docket Library, Room 10102, 725 17th Street, NW., Washington, DC 20503.

Public Comments Invited: You are asked to comment on any aspect of this information collection, including (a) Whether the proposed collection of information is necessary for FAA's performance; (b) the accuracy of the estimated burden; (c) ways for FAA to enhance the quality, utility and clarity

of the information collection; and (d) ways that the burden could be minimized without reducing the quality of the collected information. The agency will summarize and/or include your comments in the request for OMB's clearance of this information collection.

Issued in Washington, DC, on August 22, 2011.

Carla Scott,

FAA Information Collection Clearance Officer, IT Enterprises Business Services Division, AES–200.

[FR Doc. 2011–22248 Filed 8–30–11; 8:45 am]

BILLING CODE 4910–13–P

DEPARTMENT OF TRANSPORTATION

Federal Aviation Administration

Agency Information Collection Activities: Requests for Comments; Clearance of Renewed Approval of Information Collection: License Requirements for Operation of a Launch Site

AGENCY: Federal Aviation Administration (FAA), DOT.

ACTION: Notice and request for comments.

SUMMARY: In accordance with the Paperwork Reduction Act of 1995, FAA invites public comments about our intention to request the Office of Management and Budget (OMB) approval to renew an information collection. The **Federal Register** Notice with a 60-day comment period soliciting comments on the following collection of information was published on June 21, 2011, Vol. 76, No. 119, page 36172. The information to be collected includes data required for performing launch site location analysis. The launch site license is valid for a period of 5 years. Respondents are licensees authorized to operate sites.

DATES: Written comments should be submitted by September 30, 2011.

FOR FURTHER INFORMATION CONTACT: Carla Scott on (202) 385–4293, or by e-mail at: *Carla.Scott@faa.gov.*

SUPPLEMENTARY INFORMATION:

OMB Control Number: 2120–0644.

Title: License Requirements for Operation of a Launch Site.

Form Numbers: There are no FAA forms associated with this collection.

Type of Review: Renewal of an information collection.

Background: The data requested for a license application to operate a commercial launch site are required by 49 U.S.C. Subtitle IX, 701—Commercial Space Launch Activities, 49 U.S.C. 70101–70119 (1994). The information is needed in order to demonstrate to the FAA Office of Commercial Space Transportation (FAA/AST) that the proposed activity meets applicable public safety, national security, and foreign policy interest of the United States.

Respondents: Approximately 1 applicant.

Frequency: Information is collected on occasion.

Estimated Average Burden per Response: 2,322 hours.

Estimated Total Annual Burden: 4,644 hours.

ADDRESSES: Interested persons are invited to submit written comments on the proposed information collection to the Office of Information and Regulatory Affairs, Office of Management and Budget. Comments should be addressed to the attention of the Desk Officer, Department of Transportation/FAA, and sent via electronic mail to *oira_submission@omb.eop.gov,* or faxed to (202) 395–6974, or mailed to the Office of Information and Regulatory Affairs, Office of Management and Budget, Docket Library, Room 10102, 725 17th Street, NW., Washington, DC 20503.

Public Comments Invited: You are asked to comment on any aspect of this information collection, including (a) Whether the proposed collection of information is necessary for FAA's performance; (b) the accuracy of the estimated burden; (c) ways for FAA to enhance the quality, utility and clarity of the information collection; and (d) ways that the burden could be minimized without reducing the quality of the collected information. The agency will summarize and/or include your comments in the request for OMB's clearance of this information collection.

Issued in Washington, DC, on August 22, 2011.

Carla Scott,

FAA Information Collection Clearance Officer, IT Enterprises Business Services Division, AES–200.

[FR Doc. 2011–22247 Filed 8–30–11; 8:45 am]

BILLING CODE 4910–13–P

DEPARTMENT OF TRANSPORTATION

Federal Aviation Administration

Agency Information Collection Activities: Requests for Comments; Clearance of Renewed Approval of Information Collection: Application for Certificate of Waiver or Authorization

AGENCY: Federal Aviation Administration (FAA), DOT.

ACTION: Notice and request for comments.

SUMMARY: In accordance with the Paperwork Reduction Act of 1995, FAA invites public comments about our intention to request the Office of Management and Budget (OMB) approval to renew an information collection. The **Federal Register** Notice with a 60-day comment period soliciting comments on the following collection of information was published on June 21, 2011, Vol. 76, No. 119, page 36170. U.S. Code authorizes the issuance of regulations governing the use of navigable airspace. Respondents conducting general operation and flight of aircraft or any activity that could encroach on airspace must apply for approval.

DATES: Written comments should be submitted by September 30, 2011.

FOR FURTHER INFORMATION CONTACT: Carla Scott on (202) 385–4293, or by e-mail at: *Carla.Scott@faa.gov.*

SUPPLEMENTARY INFORMATION:

OMB Control Number: 2120–0027.

Title: Application for Certificate of Waiver or Authorization.

Form Numbers: FAA Form 7711–2.

Type of Review: Renewal of an information collection.

Background: The information collected by FAA Form 7711–2, Application for Certificate of Waiver or Authorization, is reviewed and analyzed by FAA to determine the type and extent of the intended deviation from prescribed regulations. A certificate of waiver or authorization to deviate is generally issued to the applicant if the proposed operation does not create a hazard to person, property, other aircraft, and includes the operation of unmanned aircraft. Applications for certificates of waiver to the provisions of Parts 91 and 101, for authorization to make parachute jumps (other than emergency or military operations) under Part 105, Section 105.15 (airshows and meets) use FAA Form 7711–2.

Respondents: Approximately 25,231 individuals and businesses.

Frequency: Information is collected on occasion.

Estimated Average Burden per Response: 32 minutes.

Estimated Total Annual Burden: 13,646 hours.

ADDRESSES: Interested persons are invited to submit written comments on the proposed information collection to the Office of Information and Regulatory Affairs, Office of Management and Budget. Comments should be addressed to the attention of the Desk Officer, Department of Transportation/FAA, and

sent via electronic mail to *oira_submission@omb.eop.gov,* or faxed to (202) 395–6974, or mailed to the Office of Information and Regulatory Affairs, Office of Management and Budget, Docket Library, Room 10102, 725 17th Street, NW., Washington, DC 20503.

Public Comments Invited: You are asked to comment on any aspect of this information collection, including (a) Whether the proposed collection of information is necessary for FAA's performance; (b) the accuracy of the estimated burden; (c) ways for FAA to enhance the quality, utility and clarity of the information collection; and (d) ways that the burden could be minimized without reducing the quality of the collected information. The agency will summarize and/or include your comments in the request for OMB's clearance of this information collection.

Issued in Washington, DC, on August 22, 2011.

Carla Scott,

FAA Information Collection Clearance Officer, IT Enterprises Business Services Division, AES–200.

[FR Doc. 2011–22245 Filed 8–30–11; 8:45 am]

BILLING CODE 4910–13–P

DEPARTMENT OF TRANSPORTATION

Federal Aviation Administration

Notice of Intent To Release Federally-Obligated Airport Properties, Tampa International Airport, Tampa, FL

AGENCY: Federal Aviation Administration (FAA), DOT.

ACTION: Request for public comment.

SUMMARY: The FAA hereby provides notice of intent to release certain airport properties, 0.026 acres at the Tampa International Airport, Tampa, FL, from the conditions, reservations, and restrictions as contained in a Quitclaim Deed agreement between the FAA and the City of Tampa, dated November 5, 1947. The release of property will allow the Hillsborough County Aviation Authority to grant a utility easment to the City of Tampa. The property is located on the southwest corner of Dale Mabry Highway and Tampa Bay Boulevard in Hillsborough County, Florida. The parcel is currently designated as non-aeronautical use. The property will be released of its federal obligations for fair market value. The fair market value of the parcel has been determined by appraisal to be $7,900.

Documents reflecting the Sponsor's request are available, by appointment only, for inspection at the Tampa International Airport and the FAA Airports District Office.

SUPPLEMENTARY INFORMATION: Section 125 of The Wendell H. Ford Aviation Investment and Reform Act for the 21st Century (AIR–21) requires the FAA to provide an opportunity for public notice and comment prior to the ''waiver'' or ''modification'' of a sponsor's Federal obligation to use certain airport land for non-aeronautical purposes.

DATES: Comments are due on or before September 30, 2011.

ADDRESSES: Documents are available for review at the Palm Beach International Airport, and the FAA Airports District Office, 5950 Hazeltine National Drive, Suite 400, Orlando, FL 32822. Written comments on the Sponsor's request must be delivered or mailed to: Rebecca R. Henry, Program Manager, Orlando Airports District Office, 5950 Hazeltine National Drive, Suite 400, Orlando, FL 32822–5024.

FOR FURTHER INFORMATION CONTACT: Rebecca R. Henry, Program Manager, Orlando Airports District Office, 5950 Hazeltine National Drive, Suite 400, Orlando, FL 32822–5024.

W. Dean Stringer,

Manager, Orlando Airports District Office, Southern Region.

[FR Doc. 2011–22233 Filed 8–30–11; 8:45 am]

BILLING CODE 4910–13–P

DEPARTMENT OF TRANSPORTATION

Federal Aviation Administration

[Summary Notice No. PE–2011–39]

Petition for Exemption; Summary of Petition Received

AGENCY: Federal Aviation Administration (FAA), DOT.

ACTION: Notice of petition for exemption received.

SUMMARY: This notice contains a summary of a petition seeking relief from specified requirements of Title 14, Code of Federal Regulations (14 CFR). The purpose of this notice is to improve the public's awareness of, and participation in, this aspect of the FAA's regulatory activities. Neither publication of this notice nor the inclusion or omission of information in the summary is intended to affect the legal status of the petition or its final disposition.

DATES: Comments on this petition must identify the petition docket number and must be received on or before September 20, 2011.

ADDRESSES: You may send comments identified by docket number FAA–2011–0883 using any of the following methods:

- *Government-wide rulemaking Web site:* Go to *http://www.regulations.gov* and follow the instructions for sending your comments digitally.
- *Mail:* Send comments to the Docket Management Facility; U.S. Department of Transportation, 1200 New Jersey Avenue, SE., West Building Ground Floor, Room W12–140, Washington, DC 20590.
- *Fax:* Fax comments to the Docket Management Facility at 202–493–2251.
- *Hand Delivery:* Bring comments to the Docket Management Facility in Room W12–140 of the West Building Ground Floor at 1200 New Jersey Avenue, SE., Washington, DC, between 9 a.m. and 5 p.m., Monday through Friday, except Federal holidays.

Privacy: We will post all comments we receive, without change, to *http://www.regulations.gov,* including any personal information you provide. Using the search function of our docket Web site, anyone can find and read the comments received into any of our dockets, including the name of the individual sending the comment (or signing the comment for an association, business, labor union, *etc.*). You may review the DOT's complete Privacy Act Statement in the **Federal Register** published on April 11, 2000 (65 FR 19477–78).

Docket: To read background documents or comments received, go to *http://www.regulations.gov* at any time or to the Docket Management Facility in Room W12–140 of the West Building Ground Floor at 1200 New Jersey Avenue, SE., Washington, DC, between 9 a.m. and 5 p.m., Monday through Friday, except Federal holidays.

FOR FURTHER INFORMATION CONTACT: Mark Forseth, ANM–113, (425) 227–2796, Federal Aviation Administration, 1601 Lind Avenue, SW., Renton, WA 98057–3356, or Frances Shaver, (202) 267–4059, Office of Rulemaking (ARM–207), Federal Aviation Administration, 800 Independence Avenue, SW., Washington, DC 20591.

This notice is published pursuant to 14 CFR 11.85.

Issued in Washington, DC, on August 23, 2011.

Dennis R. Pratte,

Acting Director, Office of Rulemaking.

Petition for Exemption

Docket No.: FAA–2011–0883.

Petitioner: The Boeing Company.

Section of 14 CFR Affected: Section 25.809(a).

Description of Relief Sought: The petitioner requests an exemption from

exterior emergency-lighting-system requirements for some exits on Boeing Model 747–8 airplanes.

[FR Doc. 2011–22328 Filed 8–30–11; 8:45 am]

BILLING CODE 4910–13–P

DEPARTMENT OF TRANSPORTATION

Federal Highway Administration

Notice of Final Federal Agency Actions on Proposed Bridge and Approach Roadways in Nevada and Arizona

AGENCY: Federal Highway Administration (FHWA), DOT.

ACTION: Notice of Limitation on Claims for Judicial Review of Actions by FHWA, U.S. Fish and Wildlife Service (USFWS), and Other Federal Agencies.

SUMMARY: This notice announces actions taken by the FHWA, USFWS, and other Federal agencies that are final within the meaning of 23 U.S.C. 139(I)(1). The actions relate to the proposed Laughlin-Bullhead City Bridge project in Laughlin, Clark County, Nevada; and in Bullhead City, Mohave County, Arizona. Those actions grant licenses, permits, and approvals for the project.

DATES: By this notice, the FHWA is advising the public of final agency actions subject to 23 U.S.C. 139(l)(1). A claim seeking judicial review of the Federal agency actions on the bridge and roadway project will be barred unless the claim is filed on or before February 27, 2012. If the Federal law that authorizes judicial review of a claim provides a time period less than 180 days for filing such claim, then that shorter time period still applies.

FOR FURTHER INFORMATION CONTACT: For FHWA: Mr. Abdelmoez Abdalla, Environmental Program Manager, Federal Highway Administration, 705 North Plaza Street, Carson City, Nevada 89701–0602; *telephone:* (775) 687–1231; *e-mail: abdelmoez.abdalla@dot.gov.* The FHWA Nevada Division Office's regular business hours are 7:30 a.m. to 4 p.m. (Pacific Standard Time). For the Nevada Department of Transportation (NDOT): Mr. Steve M. Cooke, P.E., Chief, Environmental Services Division, Nevada Department of Transportation, 1263 South Stewart Street, Carson City, Nevada 89712; *telephone:* (775) 888–7013; *e-mail: scooke@dot.state.nv.us.* The NDOT office's regular business hours are 8 a.m. to 5 p.m. (Pacific Standard Time). For USFWS: Mr. Michael Burroughs, U.S. Fish and Wildlife Service, 4701 North Torrey Pines Drive, Las Vegas, Nevada 89130; *telephone:* (702) 515–5230; *e-mail: michael_burroughs@fws.gov.* The USFWS office's regular business hours are 7:30 a.m. to 4 p.m. (Pacific Standard Time).

SUPPLEMENTARY INFORMATION: Notice is hereby given that the FHWA, USFWS, and other Federal agencies have taken final agency actions subject to 23 U.S.C. 139(l)(1) by issuing licenses, permits, and approvals for the following bridge and roadway project in Clark County in the State of Nevada and in Mohave County in the State of Arizona. The proposed project would involve the construction of a new bridge (two general-purpose lanes in each direction and a multi-use pathway) over the Colorado River. In addition to the new bridge, the proposed project includes construction of a new intersection at Needles Highway and a four-lane approach roadway (two general-purpose lanes in each direction and a multi-use pathway) from Needles Highway in Laughlin, Clark County, Nevada (the west end) to the extension of Bullhead Parkway west of State Route (SR) 95 in Bullhead City, Mohave County, Arizona (the east end). The proposed work would cover a distance of approximately 4.38 miles. The federal project reference number is DE–PLH–0003 (108). The actions taken by the Federal agencies, and the laws under which such actions were taken, are described in the Environmental Assessment (EA) for the Laughlin–Bullhead City Bridge Project that was approved on October 21, 2010, the Design Recommendation Report (DRR) that was approved by the Nevada department of Transportation on May 18, 2011, the FHWA's Finding of No Significant Impact (FONSI) issued on July 13, 2011, and in other documents in the FHWA or NDOT project records. The EA, DRR, FONSI, and other project records are available by contacting FHWA or NDOT Environmental Service Division at the addresses provided above. The EA, the FONSI, and other project related information can also be viewed at the project Web site at *http://www.rtcsnv.com/mpo/projects/laughlin/.* USFWS also issued its biological opinion (File Nos. 84320–2010–F–0423 and 84320–2011–I–0027) for the project's possible adverse effects on the desert tortoise (*Gopherus agassizii*) on November 5, 2010. The USFWS biological opinion is available by contacting the USWFWS at the address provided above.

This notice applies to all Federal agency decisions as of the issuance date of this notice and all laws under which such actions were taken, including but not limited to:

1. General: National Environmental Policy Act (NEPA) [42 U.S.C. 4321–4347]; Federal-Aid Highway Act (FAHA) [23 U.S.C. 109 and 23 U.S.C. 128].
2. Air: Clean Air Act [42 U.S.C. 7401–7671(q)].
3. Land: Section 4(f) of the Department of Transportation Act of 1966 [23 U.S.C. 138 and 49 U.S.C. 303] and Section 6(f) of the Land and Water Conservation Act as amended [16 U.S.C 4601].
4. Historic and Cultural Resources: Section 106 of the National Historic Preservation Act of 1966, as amended [16 U.S.C. 470f]; Archeological and Historic Preservation Act [16 U.S.C. 469–469(c)].
5. Wildlife: Endangered Species Act [16 U.S.C. 1531–1544 and Section 1536]; Fish and Wildlife Coordination Act [16 U.S.C. 661–667 (d)]; Migratory Bird Treaty Act [16 U.S.C. 703–712].
6. Executive Orders: E.O. 11990, Protection of Wetlands; E.O. 11988, Floodplain Management; E.O. 12898, Federal Actions to Address Environmental Justice in Minority Populations and Low Income Populations; E.O. 11593, Protection and Enhancement of Cultural Resources; E.O. 13287, Preserve America; E.O. 11514, Protection and Enhancement of Environmental Quality; E. O. 13112, Invasive Species.

(Catalog of Federal Domestic Assistance Program Number 20.205, Highway Planning and Construction. The regulations implementing Executive Order 12372 regarding intergovernmental consultation on Federal programs and activities apply to this program.)

Authority: 23 U.S.C. 139(l)(1)

Issued on: August 22, 2011.

Susan Klekar,

Division Administrator, Carson City, Nevada.

[FR Doc. 2011–22285 Filed 8–30–11; 8:45 am]

BILLING CODE 4910–RY–P

DEPARTMENT OF TRANSPORTATION

Federal Motor Carrier Safety Administration

Notice of Procedural Changes to the Performance and Registration Information Systems Management (PRISM) Program

AGENCY: Federal Motor Carrier Safety Administration (FMCSA), DOT.

ACTION: Notice; extension of effective date.

SUMMARY: FMCSA extends until September 1, 2012, the effective date for the procedural change to eliminate use

of the ''registrant-only'' USDOT Number as part of the PRISM program. In an August 9, 2010, **Federal Register** notice, the Agency initially set September 1, 2011, as the effective date of the change. The extension will allow the Agency to provide additional implementation guidance based on feedback and information received since the August 9, 2010, notice of procedural change and will allow States and other stakeholders to make necessary changes to their systems and processes pursuant to this additional guidance.

DATES: The new effective date to eliminate use of the ''registrant-only'' USDOT Number as part of the PRISM program is September 1, 2012.

FOR FURTHER INFORMATION CONTACT: Stephen Parker, Transportation Specialist, Office of Enforcement and Compliance, Federal Motor Carrier Safety Administration, 1200 New Jersey Avenue, SE., Washington, DC 20590–0001; (202) 366–6407 (telephone); *stephen.parker@dot.gov* (e-mail).

Background

On August 9, 2010, FMCSA published a **Federal Register** notice announcing plans to eliminate the practice of allowing non-motor carrier registrants to obtain registrant-only USDOT Numbers under the PRISM program (76 FR 47883). The Agency developed the concept of a ''registrant-only'' USDOT Number in 1999 to identify registered owners of commercial motor vehicles (CMVs) that are not motor carriers but lease their CMVs to entities that are motor carriers. The Agency later concluded that registrant-only USDOT Numbers were being used differently than intended and announced the decision to eliminate the requirement for registrant-only USDOT Numbers. The FMCSA set September 1, 2011, as the effective date for the change.

Today's action extends the effective date until September 1, 2012, providing adequate time for all States participating in the PRISM program to complete process changes and for the Agency to provide updated guidance, as needed, to PRISM member jurisdictions and other stakeholders.

Issued on: August 25, 2001.

Anne S. Ferro,

Administrator.

[FR Doc. 2011–22318 Filed 8–30–11; 8:45 am]

BILLING CODE 4910–EX–P

DEPARTMENT OF TRANSPORTATION

Federal Railroad Administration

[Docket Number FRA–2010–0139]

Petition for Waiver of Compliance

In accordance with Part 211 of Title 49 Code of Federal Regulations (CFR), this document provides the public notice that by a document dated May 11, 2011, Fillmore & Western Railway Company (FWRY) has resubmitted a petition letter to the Federal Railroad Administration (FRA) requesting a waiver of compliance from certain provisions of the Federal railroad safety regulations contained at 49 CFR parts 215 and 224.

Previously, by a letter dated November 15, 2010, from FWRY to FRA, FWRY requested to withdraw its petition as announced in the **Federal Register** (Ref. Volume 75, No. 192, Tuesday, October 5, 2010, Pages 61562 and 61563) in the same docket as the current one, i.e. Docket Number: FRA–2010–0139.

Specifically, FWRY seeks a waiver of compliance from the Railroad Freight Car Safety Standards, 49 CFR 215.301, which requires stenciling or otherwise displaying the reporting marks and built date of freight cars; 49 CFR 215.303, which requires stenciling on restricted freight cars; and Reflectorization of Rail Freight Rolling Stock, 49 CFR 224.101, which requires the application of reflective materials for freight rolling stock. FWRY requests this relief for five freight cars: Tank Car #8803, Flat Car #8017, Box Car #2326, Box Car #16600, and Flat Car #680.

As information, FWRY also requests approval of continued inservice of the above-mentioned freight cars that are more than 50 years from their original construction dates.

Specifically, FWRY seeks permission to move the stenciling location of the reporting marks and built date from each side of the freight carbody (49 CFR 215.301(a) and (b)) to both ends of the car. To justify this request, FWRY stated that although FWRY is considered a general system railroad, these cars are not interchanged in or with the general system. These cars are not freight revenue cars, and are only used for tourist passengers, films, movies, props, and still photos. FWRY requests this waiver due to the fact that the movie and television companies and still photographers want the cars to be authentic in their antiquated and historic look, or to have them renamed, numbered, and painted to their particular themed set, film, movie, or still photo. FWRY has been known to renumber and repaint cars and engines two or three times a month to accommodate filming or still photo requests. Re-establishing the reporting marks and built date to the sides after each instance that they are removed is very costly. With the small amount of equipment that FWRY has, all of the train crew and staff are very familiar with each piece of equipment. FWRY does not transport any type of hazardous loads or freight. FWRY runs its trains at very low speeds, generally 10–15 mph.

To support its petition to seek relief from the stenciling (49 CFR 215.303) and reflectorization (49 CFR 224.101) requirements, FWRY states that the cars subject to this waiver are only used for tourist passengers, films, movies, props, and still photos. Although FWRY is considered a general system railroad, these subject cars are not interchanged in or with the general system, and are not freight revenue cars. FWRY asks for this waiver due to the fact that the movie and television companies and still photographers want the cars to be authentic in their antiquated and historic look.

A copy of the petition, as well as any written communications concerning the petition, is available for review online at *http://www.regulations.gov* and in person at the U.S. Department of Transportation's (DOT) Docket Operations Facility, 1200 New Jersey Ave., SE., W12–140, Washington, DC 20590. The Docket Operations Facility is open from 9 a.m. to 5 p.m., Monday through Friday, except Federal holidays.

Interested parties are invited to participate in these proceedings by submitting written views, data, or comments. FRA does not anticipate scheduling a public hearing in connection with these proceedings since the facts do not appear to warrant a hearing. If any interested party desires an opportunity for oral comment, they should notify FRA, in writing, before the end of the comment period and specify the basis for their request.

All communications concerning these proceedings should identify the appropriate docket number and may be submitted by any of the following methods:

- *Web site: http://www.regulations.gov.* Follow the online instructions for submitting comments.
- *Fax:* 202–493–2251.
- *Mail:* Docket Operations Facility, U.S. Department of Transportation, 1200 New Jersey Avenue, SE., W12–140, Washington, DC 20590.
- *Hand Delivery:* 1200 New Jersey Avenue, SE., Room W12–140, Washington, DC 20590, between 9 a.m.

and 5 p.m., Monday through Friday, except Federal holidays.

Communications received by October 17, 2011 will be considered by FRA before final action is taken. Comments received after that date will be considered as far as practicable.

Anyone is able to search the electronic form of any written communications and comments received into any of our dockets by the name of the individual submitting the comment (or signing the comment, if submitted on behalf of an association, business, labor union, *etc.*). You may review DOT's complete Privacy Act Statement in the **Federal Register** published on April 11, 2000 (Volume 65, Number 70; Pages 19477–78), or online at *http://www.dot.gov/privacy.html.*

Issued in Washington, DC, on August 26, 2011.

Robert C. Lauby,

Deputy Associate Administrator for Regulatory and Legislative Operations.

[FR Doc. 2011–22320 Filed 8–30–11; 8:45 am]

BILLING CODE 4910–06–P

DEPARTMENT OF TRANSPORTATION

National Highway Traffic Safety Administration

[Docket No. NHTSA–2011–0124]

Decision That Certain Nonconforming Motor Vehicles Are Eligible for Importation

AGENCY: National Highway Traffic Safety Administration (NHTSA), Department of Transportation.

ACTION: Notice of decision by National Highway Traffic Safety Administration (NHTSA) that certain nonconforming motor vehicles are eligible for importation.

SUMMARY: This document announces decisions by NHTSA that certain motor vehicles not originally manufactured to comply with all applicable Federal Motor Vehicle Safety Standards (FMVSS) are eligible for importation into the United States because they are substantially similar to vehicles originally manufactured for sale in the United States and certified by their manufacturers as complying with the safety standards, and they are capable of being readily altered to conform to the standards or because they have safety features that comply with, or are capable of being altered to comply with, all applicable FMVSS.

DATES: These decisions became effective on the dates specified in Annex A.

FOR FURTHER INFORMATION CONTACT: George Stevens, Office of Vehicle Safety Compliance, NHTSA (202–366–5308).

SUPPLEMENTARY INFORMATION:

Background

Under 49 U.S.C. 30141(a)(1)(A), a motor vehicle that was not originally manufactured to conform to all applicable FMVSS shall be refused admission into the United States unless NHTSA has decided that the motor vehicle is substantially similar to a motor vehicle originally manufactured for importation into and/or sale in the United States, certified under 49 U.S.C. 30115, and of the same model year as the model of the motor vehicle to be compared, and is capable of being readily altered to conform to all applicable FMVSS.

Where there is no substantially similar U.S.-certified motor vehicle, 49 U.S.C. 30141(a)(1)(B) permits a nonconforming motor vehicle to be admitted into the United States if its safety features comply with, or are capable of being altered to comply with, all applicable FMVSS based on destructive test data or such other evidence as NHTSA decides to be adequate.

Petitions for eligibility decisions may be submitted by either manufacturers or importers who have registered with NHTSA pursuant to 49 CFR part 592. As specified in 49 CFR 593.7, NHTSA publishes notice in the **Federal Register** of each petition that it receives, and affords interested persons an opportunity to comment on the petition. At the close of the comment period, NHTSA decides, on the basis of the petition and any comments that it has received, whether the vehicle is eligible for importation. The agency then publishes this decision in the **Federal Register**.

NHTSA received petitions from registered importers to decide whether the vehicles listed in Annex A to this notice are eligible for importation into the United States. To afford an opportunity for public comment, NHTSA published notice of these petitions as specified in Annex A. The reader is referred to those notices for a thorough description of the petitions.

Comments: Safe Ride News (Safe Ride), a Division of the Willapa Bay Company, Inc., submitted comments to petition dockets NHTSA–2011–0057, NHTSA–2011–0019, and NHTSA–2011–0061 expressing its concern that a nonconforming vehicle's ability to meet all safety requirements intended to protect child occupants (specifically those required by FMVSS Nos. 208 *Occupant Crash Protection* and 225 *Child Restraint Anchorage Systems*) be verified before the vehicle is released by a Registered Importer (RI). Safe Ride also questioned whether it is advisable for the agency to permit the importation of older vehicles that cannot be required to meet safety standards put into place after their date of manufacture.

Addressing the first issue raised by Safe Rides, it is worth noting that under the agency's existing regulations, a nonconforming vehicle cannot be found eligible for importation unless it is shown to be capable of being modified to conform to all applicable FMVSS in effect on its date of manufacture. Moreover, such a vehicle cannot be released by an RI for the purpose of being licensed or registered for on-road use until the RI proves to NHTSA's satisfaction that the vehicle does in fact comply with all such standards. In instances where modifications are necessary to achieve compliance, the RI must provide descriptions of the modifications required along with documentary and photographic evidence that the modifications have been made. When modifications require components that are different from those installed in a substantially similar U.S.-certified version of a vehicle, proof that the substituted components will bring the vehicle into compliance with all applicable FMVSS are also necessary. With regard to the second issue raised by Safe Rides, the agency notes that it lacks authority to deny import eligibility to an older model vehicle on the basis that the vehicle could not be made to comply with FMVSS put into place after the vehicle's date of manufacture.

No other substantive comments were received in response to the subject petitions.

Based on its review of the information submitted by the petitioners, NHTSA has decided to grant the petitions.

Vehicle Eligibility Number for Subject Vehicles: The importer of a vehicle admissible under any final decision must indicate on the form HS–7 accompanying entry the appropriate vehicle eligibility number indicating that the vehicle is eligible for entry. Vehicle eligibility numbers assigned to vehicles admissible under this decision are specified in Annex A.

Final Decision: Accordingly, on the basis of the foregoing, NHTSA hereby decides that each motor vehicle listed in Annex A to this notice, which was not originally manufactured to comply with all applicable FMVSS, is either substantially similar to a motor vehicle manufactured for importation into and/or sale in the United States, and certified under 49 U.S.C. 30115, as

specified in Annex A, and is capable of being readily altered to conform to all applicable FMVSS or has safety features that comply with, or is capable of being altered to comply with, all applicable Federal Motor Vehicle Safety Standards.

Authority: 49 U.S.C. 30141(a)(1)(A), (a)(1)(B) and (b)(1); 49 CFR 593.8; delegations of authority at 49 CFR 1.50 and 501.8.

Issued on: August 24, 2011.

Claude H. Harris,

Director, Office of Vehicle Safety Compliance.

Annex A—Nonconforming Motor Vehicles Decided To Be Eligible for Importation

1. Docket No. NHTSA–2011–0061:
   Nonconforming Vehicles: 2007 Dodge Durango multipurpose passenger vehicles manufactured for the Mexican market.
   Substantially Similar U.S. Certified Vehicles: 2007 Dodge Durango multipurpose passenger vehicles manufactured for the Mexican market.
   Notice of Petition:
   Published at: 76 FR 32391 (June 6, 2011).
   Vehicle Eligibility Number: VSP–534 (effective date July 19, 2011).
2. Docket No. NHTSA–2011–0055:
   Nonconforming Vehicles: 2007–2011 Suzuki GSX1300R Motorcycles.
   Substantially Similar U.S. Certified Vehicles:
   2007–2011 Suzuki GSX1300R Motorcycles.
   Notice of Petition:
   Published at: 76 FR 30425 (May 25, 2011).
   Vehicle Eligibility Number: VSP–533 (effective date July 11, 2011).
3. Docket No. NHTSA–2011–0057:
   Nonconforming Vehicles: 2006 Mercedes-Benz CLS class passenger cars manufactured prior to September 1, 2006.
   Substantially Similar U.S. Certified Vehicles: 2006 Mercedes-Benz CLS class passenger cars manufactured prior to September 1, 2006.
   Notice of Petition:
   Published at: 76 FR 30426 (May 25, 2011).
   Vehicle Eligibility Number: VSP–532 (effective date July 7, 2011).
4. Docket No. NHTSA–2011–0028:
   Nonconforming Vehicles: 2005–2006 Porsche Carrerra (997) passenger cars manufactured prior to September 1, 2006.
   Substantially Similar U.S. Certified Vehicles: 2005–2006 Porsche Carrerra (997) passenger cars manufactured prior to September 1, 2006.
   Notice of Petition:
   Published at: 76 FR 14117 (March 15, 2011).
   Vehicle Eligibility Number: VSP–531 (effective date April 26, 2011).
5. Docket No. NHTSA–2010–0170:
   Nonconforming Vehicles: 2006 and 2007 Aston Martin Vantage passenger cars.
   Substantially Similar U.S. Certified Vehicles: 2006 and 2007 Aston Martin Vantage passenger cars.
   Notice of Petition:
   Published at: 76 FR 6841 (February 8, 2011).
   Vehicle Eligibility Number: VSP–530 (effective date March 23, 2011).
6. Docket No. NHTSA–2010–0173:
   Nonconforming Vehicles: 1991 Rice Beaufort Double trailers.
   Substantially Similar U.S. Certified Vehicles: 1991 Rice Beaufort Double trailers.
   Notice of Petition:
   Published at: 75 FR 81711 (December 28, 2010).
   Vehicle Eligibility Number: VSP–529 (effective date February 3, 2011).
7. Docket No. NHTSA–2010–0161:
   Nonconforming Vehicles: 2010 Harley Davidson FL Series Motorcycles.
   Substantially Similar U.S. Certified Vehicles: 2010 Harley Davidson FL Series Motorcycles.
   Notice of Petition:
   Published at: 75 FR 74145 (November 30, 2010).
   Vehicle Eligibility Number: VSP–528 (effective date January 28, 2011).
8. Docket No. NHTSA–2011–0062:
   Nonconforming Vehicles: 2008–2010 M&V GmbH Siegmar Fzb trailers.
   Because there are no substantially similar U.S.-certified version 2008–2010 M&V GmbH Siegmar Fzb trailers, the petitioner sought import eligibility under 49 U.S.C. 30141(a)(1)(B).
   Notice of Petition:
   Published at: 76 FR 32019 (June 2, 2011).
   Vehicle Eligibility Number: VCP–46 (effective date July 18, 2011).
9. Docket No. NHTSA–2011–0019:
   Nonconforming Vehicles: 2005 Mercedes-Benz 350 CLS passenger cars.
   Because there are no substantially similar U.S.-certified version 2005 Mercedes-Benz 350 CLS passenger cars, the petitioner sought import eligibility under 49 U.S.C. 30141(a)(1)(B).
   Notice of Petition:
   Published at: 76 FR 28501 (May 17, 2011).
   Vehicle Eligibility Number: VCP–45 (effective date July 11, 2011).
10. Docket No. NHTSA–2011–0034:
   Nonconforming Vehicles: 2002 Kawasaki Ninja ZX–6R motorcycles.
   Because there are no substantially similar U.S.-certified version 2002 Kawasaki Ninja ZX–6R motorcycles, the petitioner sought import eligibility under 49 U.S.C. 30141(a)(1)(B).
   Notice of Petition:
   Published at: 76 FR 14116 (March 15, 2011).
   Vehicle Eligibility Number: VCP–44 (effective date April 26, 2011).
11. Docket No. NHTSA–2010–0108:
   Nonconforming Vehicles: 1989–1996 ALPINA B12 2-door Coupe model passenger cars.
   Because there are no substantially similar U.S.-certified version 1989–1996 ALPINA B12 2-door Coupe model passenger cars, the petitioner sought import eligibility under 49 U.S.C. 30141(a)(1)(B).
   Notice of Petition:
   Published at: 75 FR 51164 (August 18, 2010).
   Vehicle Eligibility Number: VCP–43 (effective date October 4, 2010).

[FR Doc. 2011–22234 Filed 8–30–11; 8:45 am]

BILLING CODE 4910–59–P

DEPARTMENT OF TRANSPORTATION

Surface Transportation Board

[Docket No. EP 670 (Sub-No. 1)]

Notice of Rail Energy Transportation Advisory Committee Meeting

AGENCY: Surface Transportation Board.

ACTION: Notice of Rail Energy Transportation Advisory Committee meeting.

SUMMARY: Notice is hereby given of a meeting of the Rail Energy Transportation Advisory Committee (RETAC), pursuant to section 10(a)(2) of the Federal Advisory Committee Act, Public Law 92–463, as amended (5 U.S.C., App. 2).

DATES: The meeting will be held on Thursday, September 15, 2011 at 8 a.m., C.D.T.

ADDRESSES: The meeting will be held at the Hyatt Regency Tulsa, 100 East Second Street, Tulsa, OK 74103.

FOR FURTHER INFORMATION CONTACT: Scott M. Zimmerman (202) 245–0386. Assistance for the hearing impaired is available through the Federal Information Relay Service (FIRS) at: (800) 877–8339.

SUPPLEMENTAL INFORMATION: RETAC arose from a proceeding instituted by the Board, in *Establishment of a Rail Energy Transportation Advisory*

Committee, STB Ex Parte No. 670. RETAC was formed to provide advice and guidance to the Board, and to serve as a forum for discussion of emerging issues regarding the transportation by rail of energy resources, particularly, but not necessarily limited to, coal, ethanol, and other biofuels. The purpose of this meeting is to continue discussions regarding issues such as rail performance, capacity constraints, infrastructure planning and development, and effective coordination among suppliers, carriers, and users of energy resources. Potential agenda items include an update by the RETAC Performance Measures subcommittee, a review and discussion of ethanol issues, a roundtable discussion, and election of new officers.

The meeting, which is open to the public, will be conducted pursuant to RETAC's charter and Board procedures. Further communications about this meeting may be announced through the Board's Web site at: *http://www.stb.dot.gov.*

This action will not significantly affect either the quality of the human environment or the conservation of energy resources.

Authority: 49 U.S.C. 721, 49 U.S.C. 11101; 49 U.S.C. 11121.

Decided: August 25, 2011.

By the Board, Joseph H. Dettmar, Acting Director, Office of Proceedings.

Jeffrey Herzig,

Clearance Clerk.

[FR Doc. 2011–22205 Filed 8–30–11; 8:45 am]

BILLING CODE 4915–01–P

DEPARTMENT OF VETERANS AFFAIRS

Advisory Committee on Disability Compensation; Notice of Meeting Amendment

The Department of Veterans Affairs (VA) gives notice under Public Law 92–463 (Federal Advisory Committee Act) that the meeting for the Advisory Committee on Disability Compensation has been rescheduled on September 13–14, 2011, at the Hyatt Regency St. Louis at The Arch, 315 Chestnut Street, St. Louis, MO, and not as originally announced in the **Federal Register** on August 25, 2011, on September 12–13, 2011, at the Saint Regis Hotel, 923 16th Street, NW., Washington, DC, from 8:30 a.m. to 3 p.m.

The session on September 13 will begin at 1:30 p.m. and end at 4 p.m. The session on September 14 will begin at 8:30 a.m. and end at 3 p.m. This meeting is open to the public.

The purpose of the Committee is to advise the Secretary of Veterans Affairs on the maintenance and periodic readjustment of the VA Schedule for Rating Disabilities. The Committee is to assemble and review relevant information relating to the nature and character of disabilities arising from service in the Armed Forces, provide an ongoing assessment of the effectiveness of the rating schedule, and give advice on the most appropriate means of responding to the needs of Veterans relating to disability compensation.

The Committee will receive briefings on issues related to compensation for Veterans with service-connected disabilities and other VA benefits programs. Time will be allocated for receiving public comments in the afternoon. Public comments will be limited to three minutes each. Individuals wishing to make oral statements before the Committee will be accommodated on a first-come, first-served basis. Individuals who speak are invited to submit 1–2 page summaries of their comments at the time of the meeting for inclusion in the official meeting record.

The public may submit written statements for the Committee's review to Robert Watkins, Designated Federal Officer, Department of Veterans Affairs, Veterans Benefits Administration, Compensation Service, Regulation Staff (211D), 810 Vermont Avenue, NW., Washington, DC 20420 or email at *Robert.Watkins2@va.gov.* Any member of the public wishing to attend the meeting or seeking additional information should contact Mr. Watkins at (202) 461–9214.

Dated: August 25, 2011.

By direction of the Secretary.

Vivian Drake,

Acting Committee Management Officer.

[FR Doc. 2011–22206 Filed 8–30–11; 8:45 am]

BILLING CODE P

FEDERAL REGISTER

Vol. 76 Wednesday,

No. 169 August 31, 2011

Part II

Environmental Protection Agency

40 CFR Parts 50, 53 and 58

Review of National Ambient Air Quality Standards for Carbon Monoxide; Final Rule

ENVIRONMENTAL PROTECTION AGENCY

40 CFR Parts 50, 53 and 58

[EPA–HQ–OAR–2008–0015; FRL–9455–2]

RIN 2060–AI43

Review of National Ambient Air Quality Standards for Carbon Monoxide

AGENCY: Environmental Protection Agency (EPA).

ACTION: Final rule.

SUMMARY: This rule is being issued at this time as required by a court order governing the schedule for completion of this review of the air quality criteria and the national ambient air quality standards (NAAQS) for carbon monoxide (CO). Based on its review, the EPA concludes the current primary standards are requisite to protect public health with an adequate margin of safety, and is retaining those standards. After review of the air quality criteria, EPA further concludes that no secondary standard should be set for CO at this time. EPA is also making changes to the ambient air monitoring requirements for CO, including those related to network design, and is updating, without substantive change, aspects of the Federal reference method.

DATES: This final rule is effective on October 31, 2011.

ADDRESSES: EPA has established a docket for this action under Docket ID No. EPA–HQ–OAR–2008–0015. Incorporated into this docket is a separate docket established for the 2010 *Integrated Science Assessment for Carbon Monoxide* (Docket ID No. EPA–HQ–ORD–2007–0925. All documents in these dockets are listed on the *http://www.regulations.gov* Web site. Although listed in the docket index, some information is not publicly available, *e.g.*, confidential business information (CBI) or other information whose disclosure is restricted by statute. Certain other material, such as copyrighted material, is not placed on the Internet and will be publicly available for viewing at the Public Reading Room. Abstracts of scientific studies cited in the review are also available on the Internet at EPA's HERO Web site: *http://hero.epa.gov/*, by clicking on the box on the right side of the page labeled ''Search HERO.'' Publicly available docket materials are available electronically through *www.regulations.gov* or may be viewed at the Public Reading Room at the Air and Radiation Docket and Information Center, EPA/DC, EPA West, Room 3334, 1301 Constitution Ave., NW., Washington, DC. The Public Reading Room is open from 8:30 a.m. to 4:30 p.m., Monday through Friday, excluding legal holidays. The telephone number for the Public Reading Room is (202) 566–1744 and the telephone number for the Air and Radiation Docket and Information Center is (202) 566–1742.

FOR FURTHER INFORMATION CONTACT: Dr. Deirdre Murphy, Health and Environmental Impacts Division, Office of Air Quality Planning and Standards, Mail code C504–06, U.S. Environmental Protection Agency, Research Triangle Park, NC 27711; telephone number: 919–541–0729; fax number: 919–541–0237; e-mail address: *murphy.deirdre@epa.gov.* For further information specifically with regard to section IV of this notice, contact Mr. Nealson Watkins, Air Quality Analysis Division, Office of Air Quality Planning and Standards, Mail code C304–06, U.S. Environmental Protection Agency, Research Triangle Park, NC 27711; telephone number: 919–541–5522; fax number: 919–541–1903; e-mail address: *watkins.nealson@epa.gov.*

SUPPLEMENTARY INFORMATION:

Table of Contents

The following topics are discussed in this preamble:

I. Background
A. Legislative Requirements
B. Related Carbon Monoxide Control Programs
C. Review of the Air Quality Criteria and Standards for Carbon Monoxide
D. Summary of Proposed Decisions on Standards for Carbon Monoxide
E. Organization and Approach to Final Decisions on Standards for Carbon Monoxide
II. Rationale for Decisions on the Primary Standards
A. Introduction
1. Overview of Air Quality Information
2. Overview of Health Effects Information
a. Carboxyhemoglobin as Biomarker of Exposure and Toxicity
b. Nature of Effects and At-Risk Populations
c. Cardiovascular Effects
3. Overview of Human Exposure and Dose Assessment
B. Adequacy of the Current Primary Standards
1. Rationale for Proposed Decision
2. Comments on Adequacy
3. Conclusions Concerning Adequacy of the Primary Standards
III. Consideration of a Secondary Standard
A. Introduction
B. Rationale for Proposed Decision
C. Comments on Consideration of Secondary Standard
D. Conclusions Concerning a Secondary Standard
IV. Amendments to Ambient Monitoring Requirements
A. Monitoring Methods
1. Proposed Changes to Parts 50 and 53
2. Public Comments
3. Decisions on Methods
B. Network Design
1. Proposed Changes
2. Public Comments
a. Near-Road Monitoring and Collocation With Near-Road Nitrogen Dioxide Monitors
b. Population Thresholds for Requiring Near-Road Carbon Monoxide Monitors
c. Implementation Schedule
d. Siting Criteria
e. Area-Wide Monitoring
f. Regional Administrator Authority
3. Conclusions on the Network Design
V. Statutory and Executive Order Reviews
A. Executive Order 12866: Regulatory Planning and Review and Executive Order 13563: Improving Regulation and Regulatory Review
B. Paperwork Reduction Act
C. Regulatory Flexibility Act
D. Unfunded Mandates Reform Act
E. Executive Order 13132: Federalism
F. Executive Order 13175: Consultation and Coordination With Indian Tribal Governments
G. Executive Order 13045: Protection of Children From Environmental Health and Safety Risks
H. Executive Order 13211: Actions That Significantly Affect Energy Supply, Distribution or Use
I. National Technology Transfer and Advancement Act
J. Executive Order 12898: Federal Actions To Address Environmental Justice in Minority Populations and Low-Income Populations
K. Congressional Review Act References

I. Background

A. Legislative Requirements

Two sections of the Clean Air Act (CAA) govern the establishment and revision of the NAAQS. Section 108 (42 U.S.C. 7408) directs the Administrator to identify and list certain air pollutants and then to issue air quality criteria for those pollutants. The Administrator is to list those air pollutants that in her ''judgment, cause or contribute to air pollution which may reasonably be anticipated to endanger public health or welfare;'' ''the presence of which in the ambient air results from numerous or diverse mobile or stationary sources;'' and ''for which * * * [the Administrator] plans to issue air quality criteria * * * '' Air quality criteria are intended to ''accurately reflect the latest scientific knowledge useful in indicating the kind and extent of all identifiable effects on public health or welfare which may be expected from the presence of [a] pollutant in the ambient air * * *'' 42 U.S.C. 7408(b). Section 109 (42 U.S.C. 7409) directs the Administrator to propose and promulgate ''primary'' and ''secondary'' NAAQS for pollutants for which air

quality criteria are issued. Section 109(b)(1) defines a primary standard as one ''the attainment and maintenance of which in the judgment of the Administrator, based on such criteria and allowing an adequate margin of safety, are requisite to protect the public health.'' [1] A secondary standard, as defined in section 109(b)(2), must ''specify a level of air quality the attainment and maintenance of which, in the judgment of the Administrator, based on such criteria, is requisite to protect the public welfare from any known or anticipated adverse effects associated with the presence of [the] pollutant in the ambient air.'' [2]

The requirement that primary standards provide an adequate margin of safety was intended to address uncertainties associated with inconclusive scientific and technical information available at the time of standard setting. It was also intended to provide a reasonable degree of protection against hazards that research has not yet identified. See *Lead Industries Association* v. *EPA*, 647 F.2d 1130, 1154 (DC Cir. 1980), *cert. denied,* 449 U.S. 1042 (1980); *American Petroleum Institute* v. *Costle*, 665 F.2d 1176, 1186 (DC Cir. 1981), *cert. denied,* 455 U.S. 1034 (1982); *American Farm Bureau Federation* v. *EPA*, 559 F.3d 512, 533 (DC Cir. 2009); *Association of Battery Recyclers* v. *EPA*, 604 F.3d 613, 617–18 (DC Cir. 2010). Both kinds of uncertainties are components of the risk associated with pollution at levels below those at which human health effects can be said to occur with reasonable scientific certainty. Thus, in selecting primary standards that provide an adequate margin of safety, the Administrator is seeking not only to prevent pollution levels that have been demonstrated to be harmful but also to prevent lower pollutant levels that may pose an unacceptable risk of harm, even if the risk is not precisely identified as to nature or degree. The CAA does not require the Administrator to establish a primary NAAQS at a zero-risk level or at background concentration levels, see *Lead Industries* v. *EPA*, 647 F.2d at 1156 n.51, but rather at a level that reduces risk sufficiently so as to protect public health with an adequate margin of safety.

In addressing the requirement for an adequate margin of safety, the EPA considers such factors as the nature and severity of the health effects involved, the size of sensitive population(s) at risk, and the kind and degree of the uncertainties that must be addressed. The selection of any particular approach to providing an adequate margin of safety is a policy choice left specifically to the Administrator's judgment. See *Lead Industries Association* v. *EPA,* 647 F.2d at 1161–62; *Whitman* v. *American Trucking Associations,* 531 U.S. 457, 495 (2001).

In setting primary and secondary standards that are ''requisite'' to protect public health and welfare, respectively, as provided in section 109(b), EPA's task is to establish standards that are neither more nor less stringent than necessary for these purposes. In so doing, EPA may not consider the costs of implementing the standards. See generally, *Whitman* v. *American Trucking Associations,* 531 U.S. 457, 465–472, 475–76 (2001). Likewise, ''[a]ttainability and technological feasibility are not relevant considerations in the promulgation of national ambient air quality standards.'' *American Petroleum Institute* v. *Costle*, 665 F. 2d at 1185.

Section 109(d)(1) requires that ''not later than December 31, 1980, and at 5-year intervals thereafter, the Administrator shall complete a thorough review of the criteria published under section 108 and the national ambient air quality standards * * * and shall make such revisions in such criteria and standards and promulgate such new standards as may be appropriate. * * *'' Section 109(d)(2) requires that an independent scientific review committee ''shall complete a review of the criteria * * * and the national primary and secondary ambient air quality standards * * * and shall recommend to the Administrator any new * * * standards and revisions of existing criteria and standards as may be appropriate. * * *'' Since the early 1980's, this independent review function has been performed by the Clean Air Scientific Advisory Committee (CASAC).[3]

B. Related Carbon Monoxide Control Programs

States are primarily responsible for ensuring attainment and maintenance of ambient air quality standards once EPA has established them. Under section 110 of the Act, and related provisions, states are to submit, for EPA approval, state implementation plans (SIPs) that provide for the attainment and maintenance of such standards through control programs directed to sources of the pollutants involved. The states, in conjunction with EPA, also administer the prevention of significant deterioration program. See CAA sections 160–169. In addition, Federal programs provide for nationwide reductions in emissions of these and other air pollutants through the Federal motor vehicle and motor vehicle fuel control program under title II of the Act (CAA sections 202–250), which involves controls for emissions from moving sources and controls for the fuels used by these sources and new source performance standards for stationary sources under section 111.

C. Review of the Air Quality Criteria and Standards for Carbon Monoxide

EPA initially established NAAQS for CO on April 30, 1971. The primary standards were established to protect against the occurrence of carboxyhemoglobin levels in human blood associated with health effects of concern. The standards were set at 9 parts per million (ppm), as an 8-hour average, and 35 ppm, as a 1-hour average, neither to be exceeded more than once per year (36 FR 8186). In the 1971 decision, the Administrator judged that attainment of these standards would provide the requisite protection of public health with an adequate margin of safety and would also provide requisite protection against known and anticipated adverse effects on public welfare, and accordingly set the secondary (welfare-based) standards identical to the primary (health-based) standards.

In 1985, EPA concluded its first periodic review of the criteria and standards for CO (50 FR 37484). In that review, EPA updated the scientific criteria upon which the initial CO standards were based through the publication of the 1979 *Air Quality Criteria Document for Carbon Monoxide* (AQCD; USEPA, 1979a) and prepared a Staff Paper (USEPA, 1979b), which, along with the 1979 AQCD, served as the basis for the development of the notice of proposed rulemaking which was published on August 18, 1980 (45 FR 55066). Delays due to uncertainties

[1] The legislative history of section 109 indicates that a primary standard is to be set at ''the maximum permissible ambient air level * * * which will protect the health of any [sensitive] group of the population,'' and that for this purpose ''reference should be made to a representative sample of persons comprising the sensitive group rather than to a single person in such a group'' S. Rep. No. 91–1196, 91st Cong., 2d Sess. 10 (1970).

[2] Welfare effects as defined in section 302(h) (42 U.S.C. 7602(h)) include, but are not limited to, ''effects on soils, water, crops, vegetation, man-made materials, animals, wildlife, weather, visibility and climate, damage to and deterioration of property, and hazards to transportation, as well as effects on economic values and on personal comfort and well-being.''

[3] Lists of CASAC members and of members of the CASAC CO Review Panel are available at: *http://yosemite.epa.gov/sab/sabproduct.nsf/WebCASAC/CommitteesandMembership?OpenDocument.*

regarding the scientific basis for the final decision resulted in EPA's announcing a second public comment period (47 FR 26407). Following substantial reexamination of the scientific data, EPA prepared an Addendum to the 1979 AQCD (USEPA, 1984a) and an updated Staff Paper (USEPA, 1984b). Following review by CASAC (Lippmann, 1984), EPA announced its decision not to revise the existing primary standards and to revoke the secondary standard for CO on September 13, 1985, due to a lack of evidence of effects on public welfare at ambient concentrations (50 FR 37484).

On August 1, 1994, EPA concluded its second periodic review of the criteria and standards for CO by deciding that revisions to the CO NAAQS were not warranted at that time (59 FR 38906). This decision reflected EPA's review of relevant scientific information assembled since the last review, as contained in the 1991 AQCD (USEPA, 1991) and the 1992 Staff Paper (USEPA, 1992). Thus, the primary standards were retained at 9 ppm with an 8-hour averaging time, and 35 ppm with a 1-hour averaging time, neither to be exceeded more than once per year (59 FR 38906).

EPA initiated the next periodic review in 1997 and released the final 2000 AQCD (USEPA, 2000) in August 2000. After release of the AQCD, Congress requested that the National Research Council (NRC) review the impact of meteorology and topography on ambient CO concentrations in high altitude and extreme cold regions of the U.S. The NRC convened the Committee on Carbon Monoxide Episodes in Meteorological and Topographical Problem Areas, which focused on Fairbanks, Alaska, as a case-study.

A final report, ''Managing Carbon Monoxide Pollution in Meteorological and Topographical Problem Areas,'' was published in 2003 (NRC, 2003) and offered a wide range of recommendations regarding management of CO air pollution, cold start emissions standards, oxygenated fuels, and CO monitoring. Following completion of the NRC report, EPA did not conduct rulemaking to complete the review.

On September 13, 2007, EPA issued a call for information from the public (72 FR 52369) requesting the submission of recent scientific information on specified topics. On January 28–29, 2008, a workshop was held to discuss policy-relevant scientific and technical information to inform EPA's planning for the CO NAAQS review (73 FR 2490). Following the workshop, a draft Integrated Review Plan (IRP) (USEPA, 2008a) was made available in March 2008 for public comment and was discussed by the CASAC via a publicly accessible teleconference consultation on April 8, 2008 (73 FR 12998; Henderson, 2008). EPA made the final IRP available in August 2008 (USEPA, 2008b).

In preparing the *Integrated Science Assessment for Carbon Monoxide* (ISA or Integrated Science Assessment), EPA held an authors' teleconference in November 2008 with invited scientific experts to discuss preliminary draft materials prepared as part of the ongoing development of the CO ISA and its supplementary annexes. The first draft ISA (USEPA, 2009a) was made available for public review on March 12, 2009 (74 FR 10734), and reviewed by CASAC at a meeting held on May 12–13, 2009 (74 FR 15265). A second draft ISA (USEPA, 2009b) was released for CASAC and public review on September 23, 2009 (74 FR 48536), and it was reviewed by CASAC at a meeting held on November 16–17, 2009 (74 FR 54042). The final ISA was released in January 2010 (USEPA, 2010a).

In May 2009, OAQPS released a draft planning document, the draft Scope and Methods Plan (USEPA, 2009c), for consultation with CASAC and public review at the CASAC meeting held on May 12–13, 2009. Taking into consideration comments on the draft Scope and Methods Plan from CASAC (Brain, 2009) and the public, OAQPS staff developed and released for CASAC review and public comment a first draft Risk and Exposure Assessment (REA) (USEPA, 2009d), which was reviewed at the CASAC meeting held on November 16–17, 2009. Subsequent to that meeting and taking into consideration comments from CASAC (Brain and Samet, 2010a) and public comments on the first draft REA, a second draft REA (USEPA, 2010d) was released for CASAC review and public comment in February 2010, and reviewed at a CASAC meeting held on March 22–23, 2010. Drawing from information in the final CO ISA and the second draft REA, EPA released a draft Policy Assessment (PA) (USEPA, 2010e) in early March 2010 for CASAC review and public comment at the same meeting. Taking into consideration comments on the second draft REA and the draft PA from CASAC (Brain and Samet, 2010b, 2010c) and the public, staff completed the quantitative assessments which are presented in the final REA (USEPA, 2010b). Staff additionally took into consideration those comments and the final REA analyses in completing the final Policy Assessment (USEPA, 2010c) which was released in October 2010.

The proposed decision (henceforth ''proposal'') on the review of the CO NAAQS was signed on January 28, 2011, and published in the **Federal Register** on February 11, 2011. The EPA held a public hearing to provide direct opportunity for oral testimony by the public on the proposal. The hearing was held on February 28, 2011, in Arlington, Virginia. At this public hearing, EPA heard testimony from five individuals representing themselves or specific interested organizations. Transcripts from this hearing and written testimony provided at the hearing are in the docket for this review. Additionally, written comments were received from various commenters during the public comment period on the proposal. Significant issues raised in the public comments are discussed in the preamble of this final action. A summary of all other significant comments, along with EPA's responses (henceforth ''Response to Comments'') can be found in the docket for this review.

The schedule for completion of this review is governed by a court order resolving a lawsuit filed in March 2003 by a group of plaintiffs who alleged that EPA had failed to perform its mandatory duty, under section 109(d)(1), to complete a review of the CO NAAQS within the period provided by statute. The court order that governs this review, entered by the court on November 14, 2008, and amended on August 30, 2010, provides that EPA will sign for publication a notice of final rulemaking concerning its review of the CO NAAQS no later than August 12, 2011.

Some commenters have referred to and discussed individual scientific studies on the health effects of CO that were not included in the ISA (USEPA, 2010a) (''new' studies''). In considering and responding to comments for which such ''new'' studies were cited in support, EPA has provisionally considered the cited studies in the context of the findings of the ISA.

As in prior NAAQS reviews, EPA is basing its decision in this review on studies and related information included in the ISA, REA and Policy Assessment, which have undergone CASAC and public review. The studies assessed in the ISA and Policy Assessment, and the integration of the scientific evidence presented in them, have undergone extensive critical review by EPA, CASAC, and the public. The rigor of that review makes these studies, and their integrative assessment, the most reliable source of scientific information on which to base decisions on the NAAQS, decisions that all parties recognize as of great import.

NAAQS decisions can have profound impacts on public health and welfare, and NAAQS decisions should be based on studies that have been rigorously assessed in an integrative manner not only by EPA but also by the statutorily mandated independent advisory committee, as well as the public review that accompanies this process. EPA's provisional consideration of these studies did not and could not provide that kind of in-depth critical review.

This decision is consistent with EPA's practice in prior NAAQS reviews and its interpretation of the requirements of the CAA. Since the 1970 amendments, the EPA has taken the view that NAAQS decisions are to be based on scientific studies and related information that have been assessed as a part of the pertinent air quality criteria, and has consistently followed this approach. This longstanding interpretation was strengthened by new legislative requirements enacted in 1977, which added section 109(d)(2) of the Act concerning CASAC review of air quality criteria. See 71 FR 61144, 61148 (October 17, 2006) (final decision on review of NAAQS for particulate matter) for a detailed discussion of this issue and EPA's past practice.

As discussed in EPA's 1993 decision not to revise the NAAQS for ozone, ''new'' studies may sometimes be of such significance that it is appropriate to delay a decision on revision of a NAAQS and to supplement the pertinent air quality criteria so the studies can be taken into account (58 FR at 13013–13014, March 9, 1993). In the present case, EPA's provisional consideration of ''new'' studies concludes that, taken in context, the ''new'' information and findings do not materially change any of the broad scientific conclusions regarding the health effects and exposure pathways of ambient CO made in the air quality criteria. For this reason, reopening the air quality criteria review would not be warranted even if there were time to do so under the court order governing the schedule for this rulemaking.

Accordingly, EPA is basing the final decisions in this review on the studies and related information included in the CO air quality criteria that have undergone CASAC and public review. EPA will consider the ''new'' studies for purposes of decision-making in the next periodic review of the CO NAAQS, which EPA expects to begin soon after the conclusion of this review and which will provide the opportunity to fully assess these studies through a more rigorous review process involving EPA, CASAC, and the public. Further discussion of these ''new'' studies can be found in the Response to Comments document.

D. Summary of Proposed Decisions on Standards for Carbon Monoxide

For reasons discussed in the notice of proposed rulemaking, the Administrator proposed to retain the current primary CO standards. With regard to consideration of a secondary standard, the Administrator proposed to conclude that no secondary standards should be set at this time.

E. Organization and Approach to Final Decisions on Standards for Carbon Monoxide

This action presents the Administrator's final decisions in this review of the CO standards. Decisions regarding the primary CO standards are addressed below in section II. Consideration of a secondary CO standard is addressed below in section III. Ambient monitoring methods and network design related to implementation of the CO standards are addressed below in section IV. A discussion of statutory and executive order reviews is provided in section V.

Today's final decisions are based on a thorough review in the Integrated Science Assessment of the latest scientific information on known and potential human health and welfare effects associated with exposure to CO in the environment. These final decisions also take into account: (1) Assessments in the Policy Assessment of the most policy-relevant information in the Integrated Science Assessment as well as quantitative exposure, dose and risk assessments based on that information presented in the Risk and Exposure Assessment; (2) CASAC Panel advice and recommendations, as reflected in its letters to the Administrator and its discussions of drafts of the Integrated Science Assessment, Risk and Exposure Assessment and Policy Assessment at public meetings; (3) public comments received during the development of these documents, either in connection with CASAC Panel meetings or separately; and (4) public comments received on the proposed rulemaking.

II. Rationale for Decisions on the Primary Standards

A. Introduction

This section presents the rationale for the Administrator's decision that the current primary standards are requisite to protect public health with an adequate margin of safety, and that they should be retained. In developing this rationale, EPA has drawn upon an integrative synthesis in the Integrated Science Assessment of the entire body of evidence published through mid-2009 on human health effects associated with the presence of CO in the ambient air. The research studies evaluated in the ISA have undergone intensive scrutiny through multiple layers of peer review, with extended opportunities for review and comment by the CASAC Panel and the public. As with virtually any policy-relevant scientific research, there is uncertainty in the characterization of health effects attributable to exposure to ambient CO. While important uncertainties remain, the review of the health effects information has been extensive and deliberate. In the judgment of the Administrator, this intensive evaluation of the scientific evidence provides an adequate basis for regulatory decision making at this time. This review also provides important input to EPA's research plan for improving our future understanding of the relationships between exposures to ambient CO and health effects.

The health effects information and quantitative exposure/dose assessment were summarized in sections II.B and II.C of the proposal (76 FR at 8162–8172) and are only briefly outlined in sections II.A.2 and II.A.3 below. Responses to public comments specific to the material presented in sections II.A.1 through II.A.3 below are provided in the Response to Comments document.

Subsequent sections of this preamble provide a more complete discussion of the Administrator's rationale, in light of key issues raised in public comments, for concluding that the current standards are requisite to protect public health with an adequate margin of safety and that it is appropriate to retain the current primary CO standards to continue to provide requisite public health protection (section II.B).

1. Overview of Air Quality Information

This section briefly summarizes the information on CO sources, emissions, ambient air concentrations and aspects of associated exposure presented in section II.A of the proposal, as well as in section 1.3 of the Policy Assessment and chapter 2 of the Risk and Exposure Assessment.

Carbon monoxide in ambient air is formed by both natural and anthropogenic processes. In areas of human activity such as urban areas, it is formed primarily by the incomplete combustion of carbon-containing fuels with the combustion conditions influencing the rate of formation. For example, as a result of the combustion

conditions, CO emissions from large fossil-fueled power plants are typically very low because optimized fuel consumption conditions make boiler combustion highly efficient. In contrast, internal combustion engines used in many mobile sources have widely varying operating conditions. As a result, higher and more varying CO formation results from the operation of mobile sources, which continue to be a significant source sector for CO in ambient air (ISA, sections 3.4 and 3.5; 2000 AQCD, section 7.2; REA, section 2.2 and 3.1.3).

Mobile sources are a substantial contributor to total CO emissions, particularly in urban areas (ISA, section 3.5.1.3; REA, section 3.1.3). Highest ambient concentrations in urban areas occur on or near roadways, particularly highly travelled roadways, and decline somewhat steeply with distance (ISA, section 3.5.1.3; REA, section 3.1.3; Baldauf *et al.*, 2008a,b; Zhu *et al.*, 2002). For example, as described in the ISA, a study by Zhu *et al.*, (2002) documented CO concentrations at an interstate freeway to be ten times as high as an upwind monitoring site; concentrations declined rapidly in the downwind direction to levels only approximately one half roadway concentrations within 100 to 300 meters (ISA, section 3.5.1.3, Figure 3–29; Zhu *et al.*, 2002). Factors that can influence the steepness of the gradient include wind direction and other meteorological variables, and on-road vehicle density (ISA, section 3.5.1.3, Figures 3–29 and 3–30; Zhu *et al.*, 2002; Baldauf *et al.*, 2008a, b). These traffic-related ambient concentrations contribute to the higher short-term ambient CO exposures experienced near busy roads and particularly in vehicles, as described in more detail in the REA and PA.

2. Overview of Health Effects Information

This section summarizes information presented in section II.B of the proposal pertaining to health endpoints associated with the range of exposures considered to be most relevant to current ambient CO exposure levels. In recognition of the use of an internal biomarker in evaluating health risk for CO, the following section summarizes key aspects of the use of carboxyhemoglobin as an internal biomarker (section II.A.2.a). This is followed first by a summary of the array of CO-induced health effects and recognition of at-risk subpopulations (section II.A.2.b) and then by a summary of the evidence regarding cardiovascular effects (section II.A.2.c).

a. Carboxyhemoglobin as Biomarker of Exposure and Toxicity

This section briefly summarizes the current state of knowledge, as described in the Integrated Science Assessment, of the role of carboxyhemoglobin in mediating toxicity and as a biomarker of exposure. The section also summarizes the roles of endogenously produced CO and exposure to ambient and nonambient CO in influencing internal CO concentrations and carboxyhemoglobin (COHb) levels.

At this time, as during past reviews, the best characterized mechanism of action of CO is tissue hypoxia caused by binding of CO to hemoglobin to form COHb in the blood (*e.g.*, USEPA, 2000; USEPA, 1991; ISA). Increasing levels of COHb in the blood stream with subsequent decrease in oxygen availability for organs and tissues are of concern in people who have compromised compensatory mechanisms (*e.g.*, lack of capacity to increase blood flow in response to hypoxia), such as those with pre-existing heart disease. For example, the integrative review of health effects of CO indicates that ''the clearest evidence indicates that individuals with CAD [coronary artery disease] are most susceptible to an increase in CO-induced health effects'' (ISA, section 5.7.8).

Carboxyhemoglobin is formed in the blood both from CO originating in the body (endogenous CO)[4] and from CO that has been inhaled into the body (exogenous CO).[5] The amount of COHb that occurs in the blood depends on factors specific to both the physiology of the individual (including disease state) and the exposure circumstances. These include factors associated with an individual's rate of COHb elimination and production of endogenous CO, as well as those that influence the intake of exogenous CO into the blood, such as the differences in CO concentration (and partial pressure) in inhaled air, exhaled air, and blood; duration of a person's exposure to changed CO concentrations in air; and exertion level or inhalation rate (ISA, chapter 4).

Apart from the impairment of oxygen delivery to tissues related to COHb formation, toxicological studies also indicate several other pathways by which CO acts in the body, which involve a wide range of molecular targets and internal CO concentrations (2000 AQCD, sections 5.6–5.9; ISA, section 5.1.3). The role of these alternative less-well-characterized mechanisms in CO-induced health effects at concentrations relevant to the current NAAQS, however, is not clear. New research based on this evidence is needed to further understand these pathways and their linkage to CO-induced effects in susceptible populations. Accordingly, COHb level in blood continues to be well recognized and most commonly used as an important internal dose metric, and is supported by the evidence as the most useful indicator of CO exposure that is related to CO health effects of major concern (ISA, p. 2–4, sections 4.1, 4.2, 5.1.1; 1991 AQCD; 2000 AQCD; 2010 ISA).

b. Nature of Effects and At-Risk Populations

The long-standing body of evidence that has established many aspects of the biological effects of CO continues to contribute to our understanding of the health effects of ambient CO (PA, section 2.2.1). Inhaled CO elicits various health effects through binding to, and associated alteration of the function of, a number of heme-containing molecules, mainly hemoglobin (see *e.g.*, ISA, section 4.1). The best characterized health effect associated with CO levels of concern is decreased oxygen availability to critical tissues and organs, specifically the heart, induced by increased COHb levels in blood (ISA, section 5.1.2). Consistent with this, medical conditions that affect the biological mechanisms which compensate for this effect (*e.g.*, vasodilation and increased coronary blood flow with increased oxygen delivery to the myocardium) can contribute to a reduced amount of oxygen available to key body tissues, potentially affecting organ system function and limiting exercise capacity (2000 AQCD, section 7.1).[6]

This evidence newly available in this review provides additional detail and support to our prior understanding of CO effects and population susceptibility. In this review, the clearest evidence for ambient CO-related effects is available for cardiovascular effects. Using an established framework to characterize the evidence as to likelihood of causal relationships between exposure to ambient CO and

[4] Endogenous CO is produced from biochemical reactions associated with normal breakdown of heme proteins (ISA, section 4.5).

[5] Exogenous CO includes CO emitted to ambient air, CO emitted to ambient air that has infiltrated indoors and CO that originates indoors from sources such as gas stoves, tobacco smoke and gas furnaces (ISA, section 3.6; REA, section 2.2).

[6] For example, people with peripheral vascular diseases and heart disease patients often have markedly reduced circulatory capacity and reduced ability to compensate for increased circulatory demands during exercise and other stress (2000 AQCD, p. 7–7).

specific health effects (ISA, chapter 1), the ISA states that ''Given the consistent and coherent evidence from epidemiologic and human clinical studies, along with biological plausibility provided by CO's role in limiting oxygen availability, it is concluded that a causal relationship is likely to exist between relevant short-term CO exposures and cardiovascular morbidity'' (ISA, p. 2–6, section 2.5.1). Using the same established framework, the ISA describes the evidence as suggestive of causal relationships between relevant ambient CO exposure and several other health effects: Relevant short- and long-term CO exposures and central nervous system (CNS) effects, birth outcomes and developmental effects following long-term exposure, respiratory morbidity following short-term exposure, and mortality following short-term exposure (ISA, section 2.5). However, there is only limited evidence for these relationships, and the current body of evidence continues to indicate cardiovascular effects, particularly effects related to the role of CO in limiting oxygen availability to tissues, as those of greatest concern at low exposures with relevance to ambient concentrations (ISA, chapter 2). The evidence for these effects is further described in section II.A.2.c below.

As described in the proposal, the terms susceptibility, vulnerability, sensitivity, and at-risk are commonly employed in identifying population groups or life stages at relatively higher risk for health risk from a specific pollutant. In the ISA for this review, the term susceptibility has been used broadly to recognize populations that have a greater likelihood of experiencing effects related to ambient CO exposure, with use of the term susceptible populations, as used in the ISA, defined as follows (ISA, section 5.7, p. 5–115):

> Populations that have a greater likelihood of experiencing health effects related to exposure to an air pollutant (*e.g.*, CO) due to a variety of factors including, but not limited to: Genetic or developmental factors, race, gender, lifestage, lifestyle (*e.g.*, smoking status and nutrition) or preexisting disease, as well as population-level factors that can increase an individual's exposure to an air pollutant (*e.g.*, CO) such as socioeconomic status [SES], which encompasses reduced access to health care, low educational attainment, residential location, and other factors.

Thus, susceptible populations are at greater risk of CO effects and are also referred to as *at-risk* in the summary below.

As described in the proposal, the population with pre-existing cardiovascular disease continues to be the best-characterized population at risk of adverse CO-induced effects, with CAD recognized as ''the most important susceptibility characteristic for increased risk due to CO exposure'' (ISA, section 2.6.1). An important factor determining the increased susceptibility of this population is their inability to compensate for the reduction in tissue oxygen levels due to an already compromised cardiovascular system. Individuals with a healthy cardiovascular system (*i.e.,* with healthy coronary arteries) have operative physiologic compensatory mechanisms (*e.g.,* increased blood flow and oxygen extraction) for CO-induced tissue hypoxia and are unlikely to be at increased risk of CO-induced effects (ISA, p. 2–10).[7] In addition, the high oxygen consumption of the heart, together with the inability to compensate for tissue hypoxia, makes the cardiac muscle of a person suffering from CAD a critical target for CO.

Thus, the current evidence continues to support the identification of people with cardiovascular disease as susceptible to CO-induced health effects (ISA, 2–12) and those having CAD as the population with the best-characterized susceptibility (ISA, sections 5.7.1.1 and 5.7.8).[8] An important susceptibility consideration for this population is the inability to compensate for CO-induced hypoxia since individuals with CAD have an already compromised cardiovascular system. This population includes those with angina pectoris (cardiac chest pain), those who have experienced a heart attack, and those with silent ischemia or undiagnosed ischemic heart disease (AHA, 2003). People with other cardiovascular diseases, particularly heart diseases, are also at risk of CO-induced health effects.

Cardiovascular disease comprises many types of medical disorders, including heart disease, cerebrovascular disease (*e.g.,* stroke), hypertension (high blood pressure), and peripheral vascular diseases. Heart disease, in turn, comprises several types of disorders, including ischemic heart disease (coronary heart disease [CHD] or CAD, myocardial infarction, angina), congestive heart failure, and disturbances in cardiac rhythm (2000 AQCD, section 7.7.2.1).[9] Other types of cardiovascular disease may also contribute to increased susceptibility to the adverse effects of low levels of CO (ISA, section 5.7.1.1). For example, evidence with regard to other types of cardiovascular disease such as congestive heart failure, arrhythmia, and non-specific cardiovascular disease, and more limited evidence for peripheral vascular and cerebrovascular disease, indicates that ''the continuous nature of the progression of CAD and its close relationship with other forms of cardiovascular disease suggest that a larger population than just those individuals with a prior diagnosis of CAD may be susceptible to health effects from CO exposure'' (ISA, p. 5–117).

As described in the proposal, several other populations are potentially at risk of CO-induced effects, including: Those with other pre-existing diseases that may already have limited oxygen availability, increased COHb levels or increased endogenous CO production, such as people with obstructive lung diseases, diabetes and anemia; older adults; fetuses during critical phases of development and young infants or newborns; those who spend a substantial time on or near heavily traveled roadways; visitors to high-altitude locations; and people ingesting medications and other substances that enhance endogenous or metabolic CO formation (ISA, section 2.6.1). While the evidence suggests a potential susceptibility of these populations, information characterizing susceptibility for these groups is limited. For example, information is lacking on specific CO exposures or COHb levels that may be associated with health effects in these other groups and the nature of those effects, as well as a way to relate the specific evidence

[7] The other well-studied individuals at the time of the last review were healthy male adults that experienced decreased exercise duration at similar COHb levels during short term maximal exercise. This population was of lesser concern since it represented a smaller sensitive group, and potentially limited to individuals that would engage in vigorous exercise such as competing athletes (1991 AQCD, section 10.3.2).

[8] As recognized in the ISA, ''Although the weight of evidence varies depending on the factor being evaluated, the clearest evidence indicates that individuals with CAD are most susceptible to an increase in CO-induced health effects'' (ISA, p. 2–12).

[9] Coronary artery disease (CAD), often also called coronary heart disease or ischemic heart disease, is a category of cardiovascular disease associated with narrowed heart arteries. Individuals with this disease may have myocardial ischemia, which occurs when the heart muscle receives insufficient oxygen delivered by the blood. Exercise-induced angina pectoris (chest pain) occurs in many of them. Among all patients with diagnosed CAD, the predominant type of ischemia, as identified by electrocardiogram ST segment depression, is asymptomatic (*i.e.,* silent). Patients who experience angina typically have additional ischemic episodes that are asymptomatic (2000 AQCD, section 7.7.2.1). In addition to such chronic conditions, CAD can lead to sudden episodes, such as myocardial infarction (ISA, p. 5–24).

available for the CAD population to these other populations (PA, section 2.2.1).

c. Cardiovascular Effects

Similar to the previous review, results from controlled human exposure studies of individuals with coronary artery disease (CAD) (Adams *et al.,* 1988; Allred *et al.,* 1989a, 1989b, 1991; Anderson *et al.,* 1973; Kleinman *et al.,* 1989, 1998; Sheps *et al.,* 1987[10]) are the ''most compelling evidence of CO-induced effects on the cardiovascular system'' (ISA, section 5.2). Additionally, the use of an internal dose metric, COHb, adds to the strength of the findings in these controlled exposure studies. As a group, these studies demonstrate the role of short-term CO exposures in increasing the susceptibility of people with CAD to incidents of exercise-associated myocardial ischemia.

Among the controlled human exposure studies, the ISA places principal emphasis on the study of CAD patients by Allred *et al.* (1989a, 1989b, 1991) [11] (which was also considered in the previous review) for the following reasons: (1) Dose-response relationships were observed; (2) effects were observed at the lowest COHb levels tested (mean of 2–2.4% COHb [12] following experimental CO exposure), with no evidence of a threshold; (3) objective measures of myocardial ischemia (ST-segment depression) [13] were assessed, as well as the subjective measure of decreased time to induction of angina; (4) measurements were taken both by CO-oximetry (CO-Ox) and by gas chromatography (GC), which provides a more accurate measurement of COHb blood levels [14]; (5) a large number of study subjects were used; (6) a strict protocol for selection of study subjects was employed to include only CAD patients with reproducible exercise-induced angina; and (7) the study was conducted at multiple laboratories around the U.S. This study evaluated changes in time to exercise-induced onset of markers of myocardial ischemia resulting from two short (approximately 1-hour) CO exposures targeted to result in mean study subject COHb levels of 2% and 4%, respectively (ISA, section 5.2.4). In this study, subjects (n = 63) on three separate occasions underwent an initial graded exercise treadmill test, followed by 50 to 70-minute exposures under resting conditions to room air CO concentrations or CO concentrations targeted for each subject to achieve blood COHb levels of 2% and 4%. The exposures were to average CO concentrations of 0.7 ppm (room air concentration range 0–2 ppm), 117 ppm (range 42–202 ppm) and 253 ppm (range 143–357 ppm). After the 50- to 70-minute exposures, subjects underwent a second graded exercise treadmill test, and the percent change in time to onset of angina and time to ST endpoint between the first and second exercise tests was determined. For the two CO exposures, the average post-exposure COHb concentrations were reported as 2.4% and 4.7%, and the subsequent post-exercise average COHb concentrations were reported as 2.0% and 3.9%.[15]

Across all subjects, the mean time to angina onset for control (''room'' air) exposures was approximately 8.5 minutes, and the mean time to ST endpoint was approximately 9.5 minutes (Allred *et al.,* 1989b). Relative to room-air exposure that resulted in a mean COHb level of 0.6% (post-exercise), exposures to CO resulting in post-exercise mean COHb concentrations of 2.0% and 3.9% were observed to decrease the exercise time required to induce ST-segment depression by 5.1% ($p = 0.01$) and 12.1% ($p < 0.001$), respectively. These changes were well correlated with the onset of exercise-induced angina, the time to which was shortened by 4.2% ($p = 0.027$) and 7.1% ($p = 0.002$), respectively, for the two experimental CO exposures (Allred *et al.,* 1989a, 1989b, 1991).[16] As at the time of the last review, while ST-segment depression is recognized as an indicator of myocardial ischemia, the exact physiological significance of the observed changes among those with CAD is unclear (ISA, p. 5–48).

No controlled human exposure studies have been specifically designed to evaluate the effect of controlled short-term exposures to CO resulting in COHb levels lower than a study mean of 2% (ISA, section 5.2.6). However, an important finding of the multi-laboratory study was the dose-response relationship observed between COHb and the markers of myocardial ischemia, with effects observed at the lowest increases in COHb tested, without evidence of a measurable threshold effect. As reported by the authors, the results comparing ''the effects of increasing COHb from baseline levels (0.6%) to 2 and 3.9% COHb showed that each produced further changes in objective ECG measures of ischemia'' implying that ''small increments in COHb could adversely affect myocardial function and produce ischemia'' (Allred *et al.,* 1989b, 1991).

The epidemiological evidence has expanded considerably since the last review including numerous additional studies that are coherent with the evidence on markers of myocardial

[10] Statistical analyses of the data from Sheps *et al.,* (1987) by Bissette *et al.* (1986) indicate a significant decrease in time to onset of angina at 4.1% COHb if subjects that did not experience exercise-induced angina during air exposure are also included in the analyses.

[11] Other controlled human exposure studies of CAD patients (listed in Table 2–2 of the PA, and discussed in more detail in the 1991 and 2000 AQCDs) similarly provide evidence of reduced time to exercise-induced angina associated with elevated COHb resulting from controlled short-duration exposure to increased concentrations of CO.

[12] These levels and other COHb levels described for this study below are based on gas chromatography analysis unless otherwise specified. Matched measurements available for CO-oximetry (CO-Ox) and gas chromatography (GC) in this study indicate CO-Ox measurements of 2.65% (post-exercise mean) and 3.21% (post-exposure mean) corresponding to the GC measurement levels of 2.00% (post-exercise mean) to 2.38% (post-exposure mean) for the lower exposure level assessed in this study (Allred *et al.,* 1991).

[13] The ST-segment is a portion of the electrocardiogram, depression of which is an indication of insufficient oxygen supply to the heart muscle tissue (myocardial ischemia). Myocardial ischemia can result in chest pain (angina pectoris) or such characteristic changes in ECGs or both. In individuals with coronary artery disease, it tends to occur at specific levels of exercise. The duration of exercise required to demonstrate chest pain and/or a 1-mm change in the ST segment of the ECG were key measurements in the multicenter study by Allred *et al.* (1989a, 1989b, 1991).

[14] As stated in the ISA, the gas chromatographic technique for measuring COHb levels ''is known to be more accurate than spectrophotometric measurements, particularly for samples containing COHb concentrations < 5%'' (ISA, p. 5–41). CO-oximetry is a spectrophotometric method commonly used to rapidly provide approximate concentrations of COHb during controlled exposures (ISA, p. 5–41). At the low concentrations of COHb (< 5%) more relevant to ambient CO exposures, co-oximeters are reported to overestimate COHb levels compared to GC measurements, while at higher concentrations, this method is reported to produce underestimates (ISA, p. 4–18).

[15] While the COHb blood level for each subject during the exercise tests was intermediate between the post-exposure and subsequent post-exercise measurements (*e.g.,* mean 2.4–2.0% and 4.7–3.9%), the study authors noted that the measurements at the end of the exercise test represented the COHb concentrations at the approximate time of onset of myocardial ischemia as indicated by angina and ST segment changes. The corresponding ranges of CO-Ox measurements for the two exposures were 2.7–3.2% and 4.7–5.6%. In this document, we refer to the GC-measured mean of 2.0% or 2.0–2.4% for the COHb levels resulting from the lower experimental CO exposure.

[16] Another indicator measured in the study was the combination of heart rate and systolic blood pressure which provides a clinical index of the work of the heart and myocardial oxygen consumption, since heart rate and blood pressure are major determinants of myocardial oxygen consumption (Allred *et al.,* 1991). A decrease in oxygen to the myocardium would be expected to be paralleled by ischemia at lower heart rate and systolic blood pressure. This heart rate-systolic blood pressure indicator at the time to ST-endpoint was decreased by 4.4% at the 3.9% COHb dose level and by a nonstatistically-significant, smaller amount at the 2.0% COHb dose level.

ischemia from controlled human exposure studies of CAD patients (ISA, section 2.7). The most recent set of epidemiological studies in the U.S. have evaluated the associations between ambient concentrations of multiple pollutants (*i.e.,* fine particles or $PM_{2.5}$, nitrogen dioxide, sulfur dioxide, ozone, and CO) at fixed-site ambient monitors and increases in emergency department visits and hospital admissions for specific cardiovascular health outcomes including ischemic heart disease (IHD), myocardial infarction, congestive heart failure (CHF), and cardiovascular diseases (CVD) as a whole (Bell *et al.,* 2009; Koken *et al.,* 2003; Linn *et al.,* 2000; Mann *et al.,* 2002; Metzger *et al.,* 2004; Symons *et al.,* 2006; Tolbert *et al.,* 2007; Wellenius *et al.,* 2005). As noted by the ISA, ''[s]tudies of hospital admissions and [emergency department] visits for IHD provide the strongest [epidemiological] evidence of ambient CO being associated with adverse CVD outcomes'' (ISA, p. 5–40, section 5.2.3). With regard to studies for other measures of cardiovascular morbidity, the ISA notes that ''[t]hough not as consistent as the IHD effects, the effects for all CVD hospital admissions (which include IHD admissions) and CHF hospital admissions also provide evidence for an association of cardiovascular outcomes and ambient CO concentrations'' (ISA, section 5.2.3). While noting the difficulty in determining the extent to which CO is independently associated with CVD outcomes in this group of studies as compared to CO as a marker for the effects of another traffic-related pollutant or mix of pollutants, the ISA concludes that the epidemiological evidence, particularly when considering the copollutant analyses, provides support to the clinical evidence for a direct effect of short-term ambient CO exposure on CVD morbidity (ISA, pp. 5–40 to 5–41).

3. Overview of Human Exposure and Dose Assessment

Our consideration of the scientific evidence in the current review, as at the time of the last review, is informed by results from a quantitative analysis of estimated population exposure and resultant COHb levels. This analysis provides estimates of the percentages of simulated at-risk populations expected to experience daily maximum COHb levels at or above a range of benchmark levels under varying air quality scenarios (*e.g.,* just meeting the current or alternative standards), as well as characterizations of the kind and degree of uncertainties inherent in such estimates. The benchmark COHb levels were identified based on consideration of the evidence discussed in section II.A.2 above. In this section, we provide a short overview of key aspects of the assessment conducted for this review. The assessment is summarized more fully in section II.C of the proposal, discussed in detail in the REA and summarized in the PA (section 2.2.2). The results of the analyses as they relate to considerations of the adequacy of the current standards are discussed in section II.B.3 below.

As noted in the proposal notice, people can be exposed to CO in ambient air when they are outdoors and also when they are in indoor locations into which ambient (outdoor) air has infiltrated (ISA, sections 3.6.1 and 3.6.5). Indoor locations may also contain CO from indoor sources, such as gas stoves and tobacco smoke. Where present, these indoor sources can be important contributors to total CO exposure and can contribute to much greater CO exposures and associated COHb levels than those associated with ambient sources (ISA, section 3.6.5.2). For example, indoor source-related exposures, such as faulty furnaces or other combustion appliances, have been estimated in the past to lead to COHb levels on the order of twice as high as short-term elevations in ambient CO that were more likely to be encountered by the general public (2000 AQCD, p. 7–4). Further, some exposure/dose assessments performed for previous reviews have included modeling simulations both without and with indoor (nonambient) sources (gas stoves and tobacco smoke) to provide context for the assessment of ambient CO exposure and dose (*e.g.,* USEPA, 1992; Johnson *et al.,* 2000), and these assessments have found that nonambient sources have a substantially greater impact on the highest total exposures and COHb levels experienced by the simulated population than do ambient sources (Johnson *et al.,* 2000; REA, sections 1.2 and 6.3). While recognizing this potential for indoor sources, where present, to play a role in CO exposures and COHb levels, the exposure modeling in the current review (described below) did not include indoor CO sources in order to focus on the impact of ambient CO on population COHb levels.

The assessment estimated ambient CO exposure and associated COHb levels in simulated at-risk populations in two urban study areas in Denver and Los Angeles, in which current ambient CO concentrations are below the current standards. Estimates were developed for exposures to ambient CO associated with current ''as is'' conditions (2006 air quality) and also for higher ambient CO concentrations associated with air quality conditions simulated to just meet the current 8-hour standard,[17] as well as for air quality conditions simulated to just meet several potential alternative standards. Although we consider it unlikely that air concentrations in many urban areas across the U.S. that are currently well below the current standards would increase to just meet the 8-hour standard, we recognize the potential for CO concentrations in some areas currently below the standard to increase to just meet the standard. We additionally recognize that this simulation can provide useful information in evaluating the current standard, although we recognize the uncertainty associated with simulating this hypothetical profile of higher CO concentrations that just meet the current 8-hour standard.

The exposure and dose modeling for the assessment, presented in detail in the REA, relied on version 4.3 of EPA's Air Pollutant Exposure model (APEX4.3), which estimates human exposure using a stochastic, event-based microenvironmental approach (REA, chapter 4). The review of the CO standards completed in 1994 relied on population exposure and dose estimates generated from the probabilistic NAAQS exposure model (pNEM), a model that, among other differences from the current modeling approach with APEX4.3, employed a cohort-based approach (Johnson *et al.,* 1992; USEPA, 1992).[18] [19] Each of the model developments since the use of pNEM in that review have been designed to allow APEX to better represent human behavior, human physiology, and

[17] As noted elsewhere, the 8-hour standard is the controlling standard for ambient CO concentrations.

[18] When using the cohort approach, each cohort is assumed to contain persons with identical exposures during the specified exposure period. Thus, variability in exposure will be attributed to differences in how the cohorts are defined, not necessarily reflecting differences in how individuals might be exposed in a population. In the assessment for the review completed in 1994, a total of 420 cohorts were used to estimate population exposure based on selected demographic information (11 groups using age, gender, work status), residential location, work location, and presence of indoor gas stoves (Johnson, *et al.,* 1992; USEPA, 1992).

[19] The use of pNEM in the prior review also (1) relied on a limited set of activity pattern data (approximately 3,600 person-days), (2) used four broadly defined categories to estimate breathing rates, and (3) implemented a geodesic distance range methodology to approximate workplace commutes (Johnson *et al.,* 1992; USEPA, 1992). Each of these approaches used by pNEM, while appropriate given the data available at that time, would tend to limit the ability to accurately model expected variability in the population exposure and dose distributions.

microenvironmental concentrations and to more accurately estimate variability in CO exposures and COHb levels (REA, chapter 4).[20]

As used in the current assessment, APEX probabilistically generates a sample of hypothetical individuals from an actual population database and simulates each individual's movements through time and space (*e.g.,* indoors at home, inside vehicles) to estimate his or her exposure to ambient CO (REA, chapter 4). Based on exposure concentrations, minute-by-minute activity levels, and physiological characteristics of the simulated individuals (see REA, chapters 4 and 5), APEX estimates the level of COHb in the blood for each individual at the end of each hour based on a nonlinear solution to the Coburn-Forster-Kane equation (REA, section 4.4.7).

As discussed in section II.A.2.b above, people with cardiovascular disease are the population of primary focus in this review, and, more specifically, coronary artery disease, also known as coronary heart disease, is the ''most important susceptibility characteristic for increased risk due to CO exposure'' (ISA, p. 2–11). Controlled human exposure studies have provided quantitative COHb dose-response information for this specific population with regard to effects on markers of myocardial ischemia. Accordingly, based on the current evidence with regard to quantitative information of COHb levels and association with specific health effects, the at-risk populations simulated in the quantitative assessment were (1) adults with CHD (also known as IHD or CAD), both diagnosed and undiagnosed, and (2) adults with any heart diseases, including undiagnosed ischemia.[21] Evidence characterizing the nature of specific health effects of CO in other populations is limited and does not include specific COHb levels related to health effects in those groups. As a result, the quantitative assessment does not develop separate quantitative dose estimates for populations other than those with CHD or HD.

APEX simulations performed for this review focused on exposures to ambient CO occurring in eight microenvironments,[22] absent any contribution to microenvironment concentrations from indoor (nonambient) CO sources. Previous assessments, that have included modeling simulations both with and without certain indoor sources, indicated that the impact of such sources can be substantial with regard to the portion of the at-risk population experiencing higher exposures and COHb levels (Johnson *et al.,* 2000). While we are limited with regard to information regarding CO emissions from indoor sources today and how they may differ from the time of the 2000 assessment, we note that ambient contributions have notably declined, and indoor source contributions from some sources may also have declined. Thus, as indicated in the Policy Assessment, we have no firm basis to conclude a different role for indoor sources today with regard to contribution to population CO exposure and COHb levels.

In considering the REA dose estimates in the Policy Assessment, staff considered estimates of the portion of the simulated at-risk populations estimated to experience daily maximum end-of-hour absolute COHb levels above identified benchmark levels (at least once and on multiple occasions), as well as estimates of the percentage of population person-days (the only metric available from the modeling for the 1994 review), and also population estimates of daily maximum ambient contribution to end-of-hour COHb levels.[23] In identifying COHb benchmark levels of interest, primary attention was given to the multi-laboratory study in which COHb was analyzed by the more accurate GC method (Allred *et al.,* 1989a, 1989b, 1991) discussed in section II.A.2.c above. As summarized in the proposal, the Policy Assessment recognized distinctions between the REA ''baseline'' (arising from prior ambient exposure and endogenous CO production) and the pre-exposure COHb levels in the controlled human exposure study (arising from ambient and nonambient exposure history, as well as from endogenous CO production), and also noted the impact of ''baseline'' COHb levels on COHb levels occurring in response to short ambient CO exposure events such as those simulated in the REA.

Numerous improvements have been made over the last decade that have reduced the uncertainties associated with the models used to estimate COHb levels resulting from ambient CO exposures under different air quality conditions, including those associated with just meeting the current CO NAAQS (REA, section 4.3). This progression in exposure model development has led to the model currently used by the agency (APEX4.3), which has an enhanced capacity to estimate population CO exposures and more accurately predicts COHb levels in persons exposed to CO. Our application of APEX4.3 in this review, using updated data and new algorithms to estimate exposures and doses experienced by individuals, better represents the variability in population exposure and COHb dose levels than the model version used in previous CO assessments.[24] However, while APEX 4.3 is greatly improved when compared with previously used exposure models, its application is still limited with regard to data to inform our understanding of spatial relationships in ambient CO concentrations and within microenvironments of particular interest. Further information regarding model improvements and exposure modeling uncertainties is summarized in section 2.2.2 of the Policy Assessment and described in detail in chapter 7 of the REA.

Taking into consideration improvements in the model algorithms and data since the last review, and having identified and characterized these uncertainties, the Policy Assessment concludes that the estimates associated with the current analysis, at a minimum, better reflect the full distribution of exposures and dose as compared to results from the 1992 analysis. As noted in the Policy Assessment, however, potentially greater uncertainty remains in our characterization of the upper and lower

[20] APEX4.3 includes new algorithms to (1) simulate longitudinal activity sequences and exposure profiles for individuals, (2) estimate activity-specific minute-by-minute oxygen consumption and breathing rates, (3) address spatial variability in home and work-tract ambient concentrations for commuters, and (4) estimate event-based microenvironmental concentrations (PA, section 2.2.2).

[21] As described in section1.2 above, this is the same population group that was the focus of the CO NAAQS exposure/dose assessments conducted previously (*e.g.,* USEPA, 1992; Johnson *et al.,* 2000).

[22] The 8 microenvironments modeled in the REA comprised a range of indoor and outdoor locations including residences as well as motor vehicle-related locations such as inside vehicles, and public parking and fueling facilities, where the highest exposures were estimated (REA, sections 5.9 and 6.1).

[23] As summarized in the proposal and described more fully in the REA and PA, absolute COHb refers to the REA estimates of COHb levels resulting from endogenously produced CO and exposure to ambient CO (in the absence of any nonambient sources). The additional REA estimates of ambient CO exposure contribution to COHb levels were calculated by subtracting COHb estimates obtained in the absence of CO exposure—*i.e.,* that due to endogenous CO production alone (see REA, Appendix B.6)—from the corresponding end-of-hour absolute COHb estimates for each simulated individual. Thus, the REA reports estimates of the maximum end-of-hour ambient contributions across the simulated year, in addition to the maximum absolute end-of hour COHb levels.

[24] APEX4.3 provides estimates for percent of population projected to experience a single or multiple occurrences of a daily maximum COHb level above the various benchmark levels, as well as percent of person-days.

percentiles of the distribution of population exposures and COHb dose levels relative to that of other portions of the respective distribution. When considering the overall quality of the current exposure modeling approach, the algorithms, and the input data used, alongside the identified limitations and uncertainties, the REA and Policy Assessment conclude that the quantitative assessment provides reasonable estimates of CO exposure and COHb dose for the simulated population the assessment is intended to represent (*i.e.,* the population residing within the urban core of each study area). The Policy Assessment additionally notes the impact on the REA dose estimates for ambient CO contribution to COHb of the lack of nonambient sources in the model simulations. This aspect of the assessment design may contribute to higher estimates of the contribution of short-duration ambient CO exposures to total COHb than would result from simulations that include the range of commonly encountered CO sources beyond just those contributing to ambient air CO concentrations. Although the specific quantitative impact of this on estimates of population percentages discussed in this document is unknown, consideration of COHb estimates from the 2000 assessment indicates a potential for the inclusion of nonambient sources to appreciably affect absolute COHb (REA, section 6.3) and accordingly implies the potential, where present, for an impact on overall ambient contribution to a person's COHb level. Key results of the exposure and dose analyses were presented in the Policy Assessment and summarized in the proposal (Tables 1 and 2 of the proposal).

B. Adequacy of the Current Primary Standards

In considering the evidence and quantitative exposure and dose estimates with regard to judgments on the adequacy afforded by the current standards, the final decision is largely a public health policy judgment. A final decision must draw upon scientific information and analyses about health effects and risks, as well as judgments about how to consider the range and magnitude of uncertainties that are inherent in the scientific evidence and analyses. Our approach to informing these judgments is based on the recognition that the available health effects evidence generally reflects a continuum, consisting of ambient levels at which scientists generally agree that health effects are likely to occur, through lower levels at which the likelihood and magnitude of the response become increasingly uncertain. This approach is consistent with the requirements of the NAAQS provisions of the Act and with how EPA and the courts have historically interpreted the Act. These provisions require the Administrator to establish primary standards that, in the Administrator's judgment, are requisite to protect public health with an adequate margin of safety. In so doing, the Administrator seeks to establish standards that are neither more nor less stringent than necessary for this purpose. The Act does not require that primary standards be set at a zero-risk level, but rather at a level that avoids unacceptable risks to public health, including the health of sensitive groups.[25]

In evaluating whether it is appropriate to revise the current CO standards, the Administrator's considerations build on the general approach used in the last review and reflect the broader body of evidence and information now available. The approach used is based on an integration of information on health effects associated with exposure to ambient CO; expert judgment on the adversity of such effects on individuals; and policy judgments as to when the standards are requisite to protect public health with an adequate margin of safety, which are informed by air quality and related analyses, quantitative exposure and risk assessments when possible, and qualitative assessment of impacts that could not be quantified. The Administrator has taken into account both evidence-based and quantitative exposure- and risk-based considerations in developing conclusions on the adequacy of the current primary CO standards.

The Administrator's proposed conclusions on the adequacy of the current primary standards are summarized below (section II.B.1), followed by consideration of comments received on the proposal (section II.B.2) and the Administrator's final decision with regard to the adequacy of the current primary standards (II.B.3).

[25] The sensitive population groups identified in a NAAQS review may (or may not) be comprised of low income or minority groups. Where low income/minority groups are among the sensitive groups, the rulemaking decision will be based on providing protection for these and other sensitive population groups. To the extent that low income/minority groups are not among the sensitive groups, a decision based on providing protection of the sensitive groups would be expected to provide protection for the low income/minority groups (as well as any other less sensitive population groups).

1. Rationale for Proposed Decision

At the time of the proposal, in considering the adequacy of the current standards, the Administrator carefully considered the available evidence and conclusions contained in the Integrated Science Assessment; the information, exposure/dose assessment, rationale and conclusions presented in the Policy Assessment; the advice and recommendations from CASAC; and public comments as of that date. In so doing, the Administrator noted the following: (1) The long-standing evidence base concerning effects associated with exposure to CO, including the key role played by hypoxia (reduced oxygen availability) induced by increased COHb blood levels, and the use of COHb as the bioindicator and dose metric for evaluating CO exposure and the potential for health effects; (2) the strong evidence of cardiovascular effects of short-term CO exposures including the evidence from controlled human exposure studies that demonstrate a reduction in time to onset of exercise-induced markers of myocardial ischemia in response to increased COHb, and the health significance of responses observed at the 2% COHb level induced by 1-hour CO exposure, as compared to higher COHb levels; and (3) the identification of people with cardiovascular disease as a key population at risk from short-term ambient CO exposures. In the proposal, as at the time of the last review, the Administrator additionally considered and took particular note of the exposure and dose modeling results, recognizing key limitations and uncertainties, and in light of judgments noted above regarding the health significance of findings from the controlled human exposure studies, placing less weight on the health significance of infrequent or rare occurrences of COHb levels at or just above 2% and more weight to the significance of repeated such occurrences, as well as occurrences of higher COHb levels.

The Administrator also considered the newly available and much-expanded epidemiological evidence, including the complexity associated with quantitative interpretation of these studies with regard to CO, particularly the few studies available in areas where the current standards are met. Further, the Administrator considered the advice of CASAC, including their overall agreement with the Policy Assessment conclusion that the current evidence and quantitative exposure and dose estimates provide support for retaining the current standards, their view that, in

light of the epidemiological studies, revisions to lower the standards should be considered and their preference for a lower standard, and also their advice regarding the complications associated with interpreting the epidemiological studies for CO. Although CASAC expressed a preference for a lower standard, CASAC also indicated that the current evidence provides support for retaining the current suite of standards and CASAC's recommendations appear to recognize that their preference for a lower standard was contingent on a judgment as to the weight to be placed on the epidemiological evidence. For the reasons explained in the proposal, after full consideration of CASAC's advice and the epidemiological evidence, as well as its associated uncertainties and limitations, the Administrator proposed to judge those uncertainties and limitations to be too great for the epidemiological evidence to provide a basis for revising the current standards.

Taking all these considerations together, the Administrator proposed to conclude that the current suite of standards provides a very high degree of protection for the COHb levels and associated health effects of concern, as indicated by the extremely low estimates of occurrences, and provides slightly less but a still high degree of protection for the effects associated with lower COHb levels, the physiological significance of which is less clear. The Administrator additionally proposed to conclude that consideration of the epidemiological studies does not lead her to identify a need for any greater protection. Thus, the Administrator proposed to conclude that the current suite of standards provides an adequate margin of safety against adverse effects associated with short-term ambient CO exposures. For these and all of the reasons discussed above, and recognizing the CASAC conclusion that, overall, the current evidence and REA results provide support for retaining the current standards, the Administrator proposed to conclude that the current suite of primary CO standards is requisite to protect public health with an adequate margin of safety from effects of ambient CO.

2. Comments on Adequacy

In considering comments on the adequacy of the current standards, the Administrator first notes the advice and recommendations from CASAC. In the context of CASAC's review of the documents prepared during the course of the review, CASAC sent EPA five letters providing advice regarding assessment and interpretation of the available scientific evidence and the REA for the purposes of judging the adequacy of the current CO standards (Brain and Samet, 2009; Brain and Samet, 2010a; Brain and Samet, 2010b; Brain and Samet, 2010c; Brain and Samet, 2010d). In conveying comments on the draft Policy Assessment, CASAC agreed with the conclusion that the current evidence provides support for retaining the current suite of standards, while they also expressed a preference for a lower standard and stated that the epidemiological evidence could indicate the occurrence of adverse health effects at levels of the standards (Brain and Samet, 2010c). With regard to the interpretation of epidemiological studies on CO, CASAC's collective advice included recommendations regarding the weight to be placed on the epidemiological evidence (Brain and Samet, 2010c), as well as cautionary statements regarding interpretation of the epidemiological studies. Such statements included the observation that ''[d]istinguishing the effects of CO per se from the consequences of CO as a marker of pollution or vehicular traffic is a challenge, which [the ISA] needs to confront as thoroughly as possible'' (Brain and Samet, 2009, p. 2). In another letter CASAC further cautioned (Brain and Samet, 2010d, p. 2):

> The problem of co-pollutants serving as potential confounders is particularly problematic for CO. Since exposure levels for CO are now low, consideration needs to be given to the possibility that in some situations CO may be a surrogate for exposure to a mix of pollutants generated by fossil fuel combustion. A better understanding of the possible role of co-pollutants is relevant to regulation and to the design, analysis, and interpretation of epidemiologic studies on the health effects of CO.

CASAC additionally noted concerns regarding the spatial coverage of the existing CO monitoring network and the sensitivity of deployed monitors (Brain and Samet, 2009; Brain and Samet, 2010a; Brain and Samet, 2010b; Brain and Samet, 2010d). On a related note, they cautioned that ''[u]nderstanding the extent of exposure measurement error is critical for evaluating epidemiological evidence'' (Brain and Samet, 2009).

General comments from the public based on relevant factors that either support or oppose retention of the current primary CO standards are addressed in this section. Other specific public comments related to consideration of the adequacy of the current standards, as well as general comments based on implementation-related factors that are not a permissible basis for considering the need to revise the current standards, are addressed in the Response to Comments document.

The public comments received on the proposal were divided with regard to support for the Agency's proposed conclusion as to the adequacy of the current standards. All of the state and local environmental agencies or governments that provided comments on the standards concurred with EPA's proposed conclusions as did the three industry commenters. All of these commenters generally noted their agreement with the rationale provided in the proposal, with some additionally citing CASAC's recognition of support in the evidence for the adequacy of the current standards. Some of these commenters noted agreement with the weight given to the epidemiological studies in the proposal and also noted the little change in exposure/risk estimates since the time of the last review. One commenter additionally stated their view that the REA overstates the exposure and risk associated with the current standards.

As described in section II.B.3 below, the EPA generally agrees with these commenters regarding the adequacy of the current CO standards and with CASAC that the evidence provides support for the conclusion that the current CO standards protect public health with an adequate margin of safety. EPA additionally has given consideration to CASAC's advice regarding interpretation of epidemiological evidence for CO, recognizing the limitations associated with its use in drawing quantitative interpretations regarding levels of ambient CO related to health outcomes.

Two submissions recommending revision of the standards were received from national environmental or public health organizations. Additional submissions recommending revision were received from a private consultant; a group of scientists, physicians, and others; and a group of private citizens. In support of their position, these commenters variously cited CASAC comments regarding emphasis to give epidemiological studies and CASAC's stated preference for a lower standard. These submissions generally disagreed with EPA's consideration of the epidemiological evidence in the proposal and recommended that EPA give greater emphasis to epidemiological studies of a range of endpoints, including developmental and respiratory effects, based on the commenters' view that the epidemiological studies provided evidence of harm associated with ambient CO levels below the current

standards and inadequate protection for sensitive populations. Among these submissions, those that specified levels for revised standards recommended levels that were no higher than the lowest part of the ranges for the two standards that were identified for consideration in the Policy Assessment and the example options that CASAC suggested for inclusion in the Policy Assessment. Additionally, one commenter described the view that the CO standards should be revised to levels at or below the range of CO concentrations in exhaled breath of healthy non-smokers.

EPA generally disagrees with these commenters regarding conclusions that can be drawn from the evidence, including the epidemiological studies, pertaining to the adequacy of the current CO standards. In considering the adequacy of the current standards, it is important to consider both the extent to which the evidence supports a causal relationship between ambient CO exposures and adverse health effects, as well as the extent to which there is evidence pertinent to such effects under air quality conditions in which the current standards are met. With regard to the latter point, and focusing on the epidemiological evidence, it is the studies involving air quality conditions in which the current standards were met that are most informative in evaluating the adequacy of the standards (PA, p. 2–30). We note that very few of the epidemiological studies observing an association of cardiovascular disease-related outcomes with short-term CO concentrations (or those observing associations for other health effects) were conducted in areas that met the current standards throughout the period of study, thus limiting their usefulness with regard to judging the adequacy of the current standards (PA, pp. 2–33, 2–36).

Further, as CASAC has cautioned, ''the problem of co-pollutants serving as potential confounders is particularly problematic for CO'' (Brain and Samet, 2010d). While some CO epidemiological studies have applied the commonly used statistical method, two-pollutant regression models, to inform conclusions regarding CO as the pollutant eliciting the effects in these studies, and while, in some studies, the CO associations remain robust after adjustment for another traffic combustion-related pollutant, such as $PM_{2.5}$ or nitrogen dioxide (NO_2) (PA, pp. 2–36 to 2–37), the potential exists for there to be etiologically relevant pollutants that are correlated with CO yet absent from the analysis, particularly given the many pollutants associated with fossil fuel combustion. The CASAC specifically recognized this potential in stating that ''consideration needs to be given to the possibility that in some situations CO may be a surrogate for exposure to a mix of pollutants generated by fossil fuel combustion'' and ''a better understanding of the possible role of co-pollutants is relevant to * * * the interpretation of epidemiologic studies on the health effects of CO'' (Brain and Samet, 2010d).

In light of these issues related to potential confounding by co-pollutants in the case of CO, uncertainty related to exposure error for CO is of particular concern in quantitatively interpreting the epidemiological evidence (*e.g.,* with regard to ambient concentrations contributing to health outcomes).[26] As noted above, CASAC cautioned the Agency on the importance of understanding the extent of exposure error in evaluating the epidemiological evidence for CO (Brain and Samet, 2009). There are two aspects to the epidemiological studies in the specific case of CO (as contrasted with other pollutants such as PM and NO_2) that may contribute exposure error in the studies (PA, pp. 2–34 to 2–38; 76 FR 8177–8178). The first relates to the uncertainty associated with quantitative interpretation of the epidemiological study results at low ambient concentrations in light of the sizeable portion of ambient CO measurements that are at or below monitor method detection limits (MDLs). As described in the proposal, uncertainty related to the prevalence of ambient CO monitor concentrations at or below MDLs is a greater concern for the more recently available epidemiological studies in which the study areas have much reduced ambient CO concentrations compared with those in the past (PA, pp. 2–37 to 2–38). This complicates our interpretation of specific ambient CO concentrations associated with health effects (ISA, p. 3–91; Brain and Samet, 2010d), providing us with reduced confidence in quantitative interpretations of epidemiological studies for CO. Additionally, as described in the proposal, there is uncertainty and potential error associated with exposure estimates in the CO epidemiological studies that relate to the use of area-wide or central-site monitor CO concentrations in light of information about the steep gradient in CO concentrations with distance from source locations such as highly-trafficked roadways (ISA, section 3.5.1.3). As a result of differences in factors related to pollutant formation, this gradient is steeper for CO than for other traffic combustion-related pollutants, such as $PM_{2.5}$ and NO_2, contributing to a greater potential for exposure misclassification in the case of CO by the reliance on central site monitors in the CO epidemiological studies. Thus, as noted in the proposal, we recognize that the expanded body of epidemiological evidence available in this review includes its own set of uncertainties which complicates its interpretation, particularly with regard to ambient concentrations that may be eliciting health outcomes.

In our integrated assessment across all types of evidence in the ISA for this review, we conclude that a causal relationship is likely to exist for short-term exposures to ambient concentrations of CO and cardiovascular morbidity. In reaching this conclusion, the ISA notes that the most compelling evidence comes from the controlled human exposure studies (ISA, p. 2–5), which also document a significant dose-response relationship over a range of COHb concentrations relevant to consideration of the NAAQS (ISA, p. 2–13). In considering the epidemiological evidence for relevant cardiovascular outcomes, which includes multiple studies reporting associations with ambient CO concentrations under conditions when the current standards were not met (PA, p. 2–30), the ISA notes that these studies are coherent with the findings from the controlled human exposure studies (ISA, p. 2–17). However, as summarized here, various aspects of the evidence complicate quantitative interpretation of it with regard to ambient concentrations that might be eliciting the reported health outcomes.

An additional complication to our consideration of the CO epidemiological evidence is that, in contrast to the health effects evidence for all other criteria pollutants, the epidemiological studies for CO use a different exposure/dose metric from that which is the focus of the broader health evidence base, and

[26] In contrasting the strength of the epidemiological evidence available for the 2000 AQCD with that in the current review, the ISA notes that uncertainties identified in 2000 remain, including the ability of community fixed-site monitors to represent spatially variable ambient CO concentrations and personal exposures; the small expected increase in COHb due to ambient CO concentrations; the lack of biological plausibility for health effects to occur at such COHb levels, even in diseased individuals; and the possibility that ambient CO is serving as a surrogate for a mixture of combustion-related pollutants. These uncertainties complicate the quantitative interpretation of the epidemiologic findings, ''particularly regarding the biological plausibility of health effects occurring at COHb levels resulting from exposures to ambient CO concentrations measured at AQS monitors'' (ISA, pp. 2–16 to 2–17).

additional information that might be used to bridge this gap is lacking. In the case of CO, the epidemiological studies use air concentration as the exposure/dose metric, while much of the broader health effects evidence for CO, and particularly that related to cardiovascular effects, demonstrates and focuses on an internal biomarker of CO exposure (COHb) which has been considered a critical key to CO toxicity.[27] The strong evidence describing the role of COHb in CO toxicity is important to consider in interpreting the CO epidemiological studies and contributes to the biological plausibility of the ischemia-related health outcomes that have been associated with ambient CO concentrations. Yet, we do not have information on the COHb levels of epidemiological study subjects that we can evaluate in the context of the COHb levels eliciting health effects in the controlled human exposure studies. Further, we lack additional information on the CO exposures of the epidemiological study subjects to both ambient and nonambient sources of CO that might be used to estimate their COHb levels and bridge the gap between the two study types. Additionally the ISA recognizes that the changes in COHb that would likely be associated with exposure to the low ambient CO concentrations assessed in some of the epidemiological studies would be smaller than changes associated with ''substantially reduced [oxygen] delivery to tissues,'' that might plausibly lead to the outcomes observed in those studies, with additional investigation needed to determine whether there may be another mechanism of action for CO that contributes to the observed outcomes at low ambient concentrations (ISA, p. 5–48). Thus, there are uncertainties associated with the epidemiological evidence that ''complicate the quantitative interpretation of the epidemiologic findings, particularly regarding the biological plausibility of health effects occurring at COHb levels resulting from exposures to the ambient CO concentrations'' assessed in these studies (ISA, p. 2–17).

With regard to health effects other than cardiovascular outcomes, in addition to noting the complications cited above with regard to quantitative interpretation of the epidemiological evidence, we note that the evidence for these other categories of health effects is considered limited and only suggestive of a causal relationship with relevant exposures to CO in ambient air, or inadequate to infer such a relationship, or it supports the conclusion that such a relationship is not likely (see section II.A.2.b above). As described in the proposal sections II.B.2 and II.D.2.a, with regard to categories of health effects or outcomes for which the evidence is considered suggestive, evidence is lacking that might lend biological plausibility to epidemiological study results, and also sufficiently rule out the role of chance, bias and confounding in the epidemiological associations observed, for outcomes such as developmental or respiratory (ISA, chapters 1 and 2).

Thus, EPA disagrees with the commenters' conclusion that the epidemiological evidence establishes that a range of health effects, including developmental or respiratory effects, are occurring as a result of exposures to CO in ambient air at or below the current standards. We additionally disagree with commenters' statements that imply EPA has inadequately considered the evidence with regard to protection of sensitive populations and to the protection provided by the CO standards. As noted in section II.A.2.b above, EPA's assessment of the current evidence presented in the Integrated Science Assessment concludes that ''the most important susceptibility characteristic for increased risk due to CO exposure is [CAD or CHD]'' (ISA, p. 2–10). Accordingly, the proposal recognized people with cardiovascular disease as a key population at risk from short-term ambient CO exposures (proposal, section II.D.4). However, based on assessment of the evidence in the ISA, the proposal and other documents in this review also recognize the potential for susceptibility for several other populations and lifestages, including people with pre-existing diseases that may already have limited oxygen availability to tissues, increased COHb levels or increased endogenous CO production, older adults, and fetuses during critical phases of development (as summarized in section II.A.2.b above). For these groups and lifestages, the evidence is incomplete with regard to specific CO exposures or COHb levels that may be associated with health effects in these groups and the nature of those effects, as well as a way to relate the specific evidence available for the CAD population to the limited evidence for these other populations. Further, the currently available evidence does not indicate a greater susceptibility for any of the other populations or lifestages recognized as potentially at risk from exposure to ambient CO. In reaching a decision on the adequacy of the current standards in protecting public health in section II.B.3 below, however, the Administrator has considered EPA's conclusions with regard to the effects likely to be causally associated with exposure to ambient CO and population groups particularly at risk, as well as those regarding the evidence with regard to the potential for other effects and sensitive groups, and the associated uncertainty. In so doing, as indicated below, the Administrator judges the current standards to provide the requisite protection for public health, including the health of sensitive populations, with an adequate margin of safety.

3. Conclusions Concerning Adequacy of the Primary Standards

Having carefully considered the public comments, as discussed above, the Administrator believes that the fundamental scientific conclusions on the effects of CO in ambient air reached in the Integrated Science Assessment and Policy Assessment, summarized in sections II.B and II.D of the proposal remain valid. Additionally, the Administrator believes the judgments she reached in the proposal (section II.D.4) with regard to consideration of the evidence and quantitative exposure/dose assessments and advice from CASAC remain appropriate. Thus, as described below, the Administrator concludes that the current primary standards provide the requisite protection of public health with an adequate margin of safety and should be retained.[28]

In considering the adequacy of the current suite of primary CO standards, the Administrator has carefully considered the available evidence and conclusions contained in the Integrated Science Assessment; the information, exposure/dose assessment, rationale and conclusions presented in the Policy

[27] In the case of the only other criteria pollutant for which the health evidence relies on an internal dose metric—lead—the epidemiological studies also use that metric. For lead (Pb), in contrast to CO, the epidemiological evidence is focused on associations of Pb-related health effects with measurements of Pb in blood, providing a direct linkage between the pollutant, via the internal biomarker of dose, and the health effects. Thus, for Pb, as compared to the case for CO, we have less uncertainty in our interpretations of the epidemiological studies with regard to the pollutant responsible for the health effects observed. For other criteria pollutants, including PM and NO_2, air concentrations are used as the exposure/dose metric in both the epidemiological studies and the other types of health evidence. Thus, there is no comparable aspect in the PM or NO_2 evidence base.

[28] As explained below in section IV.A, EPA is repromulgating the Federal Reference Method (FRM) for CO, as set forth in Appendix C of 40 CFR part 50. Consistent with EPA's decision to retain the standards, the recodification clarifies and updates the text of the FRM, but does not make substantive changes to it.

Assessment; the advice and recommendations from CASAC; and public comments. The Administrator places primary consideration on the evidence obtained from controlled human exposure studies that demonstrates a reduction in time to onset of exercise-induced markers of myocardial ischemia in response to increased COHb resulting from short-term CO exposures, and recognizes the greater significance accorded both to larger reductions in time to myocardial ischemia and to more frequent occurrences of myocardial ischemia. As at the time of the review completed in 1994, the Administrator also takes note of the results for the modeling of exposures to ambient CO under conditions simulated to just meet the current, controlling, 8-hour standard in two study areas, as described in the REA and Policy Assessment, and the public health significance of those results. She also considers the newly available and much-expanded epidemiological evidence, including the complexity associated with quantitative interpretation of these studies, particularly the few studies available in areas where the current standards are met. In so doing, she notes that in considering the adequacy of the current standards, it is important to consider both the extent to which the evidence supports a causal relationship between ambient CO exposures and adverse health effects, as well as the extent to which there is evidence pertinent to such effects under air quality conditions in which the current standards are met. Further, the Administrator considers the advice of CASAC, including both their overall agreement with the Policy Assessment conclusion that the current evidence and quantitative exposure and dose estimates provide support for retaining the current standards, as well as their view that in light of the epidemiological studies, revisions to lower the standards should be considered and their preference for a lower standard.

As an initial matter, the Administrator places weight on the long-standing evidence base that has established key aspects of CO toxicity that are relevant to this review as they were to the review completed in 1994. These aspects include the key role played by hypoxia (reduced oxygen availability) induced by increased COHb blood levels, the identification of people with cardiovascular disease as a key population at risk from short-term ambient CO exposures, and the use of COHb as the bioindicator and dose metric for evaluating CO exposure and the potential for health effects. The Administrator also recognizes the Integrated Science Assessment's conclusion that a causal relationship is likely to exist between relevant short-term exposures to CO and cardiovascular morbidity.

In placing weight on the controlled human exposure studies, the Administrator also recognizes the uncertain health significance associated with the smaller responses to the lowest COHb level assessed in the study given primary consideration in this review (Allred *et al.,* 1989a, 1989b, 1991) and with single occurrences of such responses. In the study by Allred *et al.* (1989a, 1989b, 1991), a 4–5% reduction in time (approximately 30 seconds) to the onset of exercise-induced markers of myocardial ischemia was associated with the 2% COHb level induced by 1-hour CO exposure. In considering the significance of the magnitude of the time decrement to onset of myocardial ischemia observed at the 2% COHb level induced by short-term CO exposure, as well as the potential for myocardial ischemia to lead to more adverse outcomes, the EPA generally places less weight on the health significance associated with infrequent or rare occurrences of COHb levels at or just above 2% as compared to that associated with repeated occurrences and occurrences of appreciably higher COHb levels in response to short-term CO exposures. For example, at the 4% COHb level, the study by Allred *et al.,* (1989a, 1989b, 1991) observed a 7–12% reduction in time to the onset of exercise-induced markers of myocardial ischemia. The Administrator places more weight on this greater reduction in time to onset of exercise-induced markers compared to the reduction in time to onset at 2% COHb. The Administrator also notes that at the time of the 1994 review, an intermediate level of approximately 3% COHb was identified as a level at which adverse effects had been demonstrated in persons with angina. Now, as at the time of the 1994 review, the Administrator primarily considers the 2% COHb level, resulting from 1-hour CO exposure, in the context of a margin of safety against effects of concern that have been associated with higher COHb levels, such as 3–4% COHb.

The Administrator additionally takes note of the now much-expanded evidence base of epidemiological studies, including the multiple studies that observe positive associations between cardiovascular outcomes and short-term ambient CO concentrations across a range of CO concentrations, including conditions above as well as below the current NAAQS. She notes particularly the Integrated Science Assessment conclusion that the findings of CO-associated cardiovascular effects in these studies are logically coherent with the larger, long-standing health effects evidence base for CO and the conclusions drawn from it regarding cardiovascular disease-related susceptibility. In further considering the epidemiological evidence base with regard to the extent to which it provides support for conclusions regarding adequacy of the current standards, the Administrator takes note of CASAC's conclusions that ''[i]f the epidemiological evidence is given additional weight, the conclusion could be drawn that health effects are occurring at levels below the current standard, which would support the tightening of the current standard'' (Brain and Samet, 2010c). Additionally, the Administrator places weight on the final Policy Assessment consideration of aspects that complicate quantitative interpretation of the epidemiological studies with regard to ambient concentrations that might be eliciting the reported health outcomes.

For purposes of evaluating the adequacy of the current standards, the Administrator takes note of the multiple complicating features of the epidemiological evidence base, as described in more detail in the final Policy Assessment and in section II.D.2.a of the proposal. First, while a number of studies observed positive associations of cardiovascular disease-related outcomes with short-term CO concentrations, very few of these studies were conducted in areas that met the current standards throughout the period of study. Additionally, in CASAC's advice regarding interpretation of the currently available evidence, they stated that ''[t]he problem of co-pollutants serving as potential confounders is particularly problematic for CO'' and that given the currently low ambient CO levels, there is a possibility that CO is acting as a surrogate for a mix of pollutants generated by fossil fuel combustion. The CASAC further stated that ''[a] better understanding of the possible role of co-pollutants is relevant to regulation'' (Brain and Samet, 2010d). As described in the Policy Assessment and summarized in section II.B.2 above, there are also uncertainties related to representation of ambient CO exposures given the steep concentration gradient near roadways, as well as the prevalence of measurements below the MDL across the database. The CASAC additionally indicated the need to consider the potential for confounding effects of

indoor sources of CO (Brain and Samet, 2010c). As discussed in section II.D.2.a of the proposal, the interpretation of epidemiological studies for CO is further complicated because, in contrast to the situation for all other criteria pollutants, the epidemiological studies for CO use an exposure/dose metric (air concentration) that differs from the metric commonly used in the other key CO health studies (COHb).

The Administrator notes that although CASAC expressed a preference for a lower standard, CASAC also indicated that the current evidence provides support for retaining the current suite of standards. CASAC's recommendations appear to recognize that their preference for a lower standard was contingent on a judgment as to the weight to be placed on the epidemiological evidence. Further, as noted above and summarized in section II.C.2, CASAC has provided a range of advice regarding interpretation of the CO epidemiological studies in light of the associated uncertainties. Accordingly, in consideration of the current evidence with regard to conclusions to be drawn as to the adequacy of the current standards, the Administrator gives consideration to the full breadth of CASAC's advice.

In considering the evidence and quantitative exposure and dose estimates available in this review with regard to the adequacy of public health protection provided by the current primary standards, the Administrator recognizes that, as noted in section II.B. above, the final decision on such judgments is largely a public health policy judgment, which draws upon scientific information and analyses about health effects and risks, as well as judgments about how to consider the range and magnitude of uncertainties that are inherent in the information and analyses. These judgments are informed by the recognition that the available health effects evidence generally reflects a continuum, consisting of ambient levels at which scientists generally agree that health effects are likely to occur, through lower levels at which the likelihood and magnitude of the response become increasingly uncertain. Accordingly, the final decision requires judgment based on an interpretation of the evidence and other information that neither overstates nor understates the strength and limitations of the evidence and information nor the appropriate inferences to be drawn. As described in section I.A above, the Act does not require that primary standards be set at a zero-risk level; the NAAQS must be sufficient but not more stringent than necessary to protect public health, including the health of sensitive groups, with an adequate margin of safety.

In considering the judgments to be made regarding adequacy of the level of protection provided by the current standards, the Administrator takes particular note of the findings of the exposure and dose assessment in light of considerations discussed above regarding the weight given to different COHb levels and their frequency of occurrence. As described in the proposal, the exposure and dose assessment results indicate that only a very small percentage of the at-risk population is estimated to experience a single occurrence in a year of daily maximum COHb at or above 3.0% COHb under conditions just meeting the current 8-hour standard in the two study areas evaluated, and no multiple occurrences are estimated. The Administrator also notes the results indicating that only a small percentage of the at-risk populations are estimated to experience a single occurrence of 2% COHb in a year under conditions just meeting the standard, and still fewer are estimated to experience multiple such occurrences. Additionally, consistent with findings of the assessment performed for the review completed in 1994, less than 0.1% of person-days for the at-risk populations were estimated to include occurrences of COHb at or above 2% COHb. Taken together, the Administrator judges the current standard to provide a very high degree of protection for the COHb levels and associated health effects of concern, as indicated by the extremely low estimates of occurrences, and to provide slightly less but a still high degree of protection for the effects associated with lower COHb levels, the physiological significance of which is less clear.

In further considering the adequacy of the margin of safety provided by the current standards, the Administrator has additionally considered conclusions drawn in the Integrated Science Assessment and Policy Assessment with regard to interpretation of the limited and less certain information concerning a relationship between exposure to relevant levels of ambient CO and health effects in other, potentially, susceptible groups, and with regard to the uncertainties concerning quantitative interpretation of the available epidemiological studies. In so doing, the Administrator additionally judges the current standards to provide adequate protection against the risk of other health effects for which the evidence is less certain. Further, the Administrator concludes that consideration of the epidemiological studies does not lead her to identify a need for any greater protection. For these and all of the reasons discussed above, and recognizing the CASAC conclusion that, overall, the current evidence and REA results provide support for retaining the current standards, the Administrator concludes that the current suite of primary CO standards is requisite to protect public health with an adequate margin of safety from effects of ambient CO.

III. Consideration of a Secondary Standard

As noted in section I.A. above, section 109(b) of the Clean Air Act requires the Administrator to establish secondary standards that, in the judgment of the Administrator, are requisite to protect the public welfare from any known or anticipated adverse effects associated with the presence of the pollutant in the ambient air. In so doing, the Administrator seeks to establish standards that are neither more nor less stringent than necessary for this purpose. The Act does not require that secondary standards be set to eliminate all risk of adverse welfare effects, but rather at a level requisite to protect public welfare from those effects that are judged by the Administrator to be adverse.

This section presents the rationale for the Administrator's final decision not to set a secondary NAAQS for CO. In considering the current air quality criteria, evidence of CO-related welfare effects at or near ambient levels that are unrelated to climate has not been identified. Accordingly, in considering whether a secondary standard is requisite to protect the public welfare, the Administrator has primarily considered conclusions based on the evidence of a role for CO in effects on climate. Evaluation of this evidence in the Integrated Science Assessment and staff considerations in the Policy Assessment highlighted the limitations in this evidence and provided information indicating that this role for atmospheric CO is predominantly indirect, through its role in chemical reactions in the atmosphere which result in increased concentrations of pollutants with direct contributions to the greenhouse effect or that deplete stratospheric ozone. Given the evaluation of the evidence, as well as the views of CASAC, the Administrator concludes that no secondary standard should be set at this time because, as in the past reviews, having no standard is requisite to protect public welfare from any known or anticipated adverse effects from ambient CO exposures.

In this section, we first summarize the evidence currently available for welfare

effects to inform decisions in this review in section III.A. Next, the rationale for the proposed conclusions is summarized in section III.B. Public comments and CASAC advice regarding consideration of a secondary standard in this review are summarized in section III.C. Lastly, the Administrator's final conclusions with regard to a secondary standard for CO are presented in section III.D.

A. Introduction

In evaluating whether establishment of a secondary standard for CO is appropriate at this time, we adopted an approach in this review that builds upon the general approach used in the last review and reflects the broader body of evidence and information now available. Consideration of the evidence available in this review focuses on the following overarching question: Does the currently available scientific information provide support for considering the establishment of a secondary standard for CO?

In considering this overarching question, the Policy Assessment first noted that the extensive literature search performed for the current review did not identify any evidence of public welfare effects of CO unrelated to climate at or near ambient levels (ISA, section 1.3 and p. 1–3). However, ambient CO has been associated with welfare effects related to climate (ISA, section 3.3). Climate-related effects of CO were considered for the first time in the 2000 AQCD and are given somewhat greater focus in the current ISA relative to the 2000 AQCD in reflection of comments from CASAC and increased attention to the role of CO in climate forcing (Brain and Samet, 2009; ISA, section 3.3). Based on the current evidence, the ISA concludes that ''a causal relationship exists between current atmospheric concentrations of CO and effects on climate'' (ISA, section 2.2). Accordingly, the discussion in the Policy Assessment (summarized in the proposal) focuses on climate-related effects of CO in addressing the question posed above.

The currently available information summarized in the ISA (ISA section, 3.3) does not alter the current well-established understanding of the role of urban and regional CO in continental and global-scale chemistry, as outlined in the 2000 AQCD (PA, section 3.2). CO absorbs outgoing thermal infrared radiation very weakly; thus, the direct contribution of CO itself to climate forcing (or greenhouse warming) is very small (ISA, p. 3–11). Rather, the most significant effects on climate are indirect, resulting from CO's role as the major atmospheric sink for hydroxyl radicals. Through this role of CO in global atmospheric chemistry, CO influences the abundance of chemically reactive, major greenhouse gases, such as methane and ozone, that contribute directly to the greenhouse effect and of other gases that exert their effect on climate through depletion of stratospheric ozone (ISA, section 3.3 and p. 3–11). There is significant uncertainty concerning this effect, and it appears to be highly variable, with the ISA recognizing that climate effects of changes to emissions of a short-lived pollutant such as CO are very likely dependent on localized conditions (ISA section 3.3, pp. 3–12, 3–15, 3–16). As noted in the ISA, however, ''the indirect [global warming potential] values evaluated and summarized by [the Intergovernmental Panel on Climate Change] are global and cannot reflect effects of localized emissions or emissions changes'' (ISA at p. 3–16). Accordingly, the Policy Assessment stated that, as a result of the spatial and temporal variation in emissions and concentrations of CO and the localized chemical interdependencies that cause the indirect climate effects of CO, it is highly problematic to evaluate the indirect effects of CO on climate (PA, p. 3–3).

Based upon the information and considerations summarized above, the Policy Assessment concluded as an initial matter that, with respect to non-climate welfare effects, including ecological effects and impacts to vegetation, there is no currently available scientific information that supports a CO secondary standard (PA, section 3.4). Secondly, with respect to climate-related effects, the Policy Assessment recognized the evidence of climate forcing effects associated with CO, most predominantly through its participation in chemical reactions in the atmosphere which contribute to increased concentrations of other more direct acting climate-forcing pollutants (ISA, sections 2.2 and 3.3). The PA also noted, however, that the available information provides no basis for estimating how localized changes in the temporal and spatial patterns of ambient CO likely to occur across the U.S. with (or without) a secondary standard would affect local, regional, or nationwide changes in climate. Moreover, more than half of the indirect forcing effect of CO is attributable to ozone (O_3) formation, and welfare-related effects of O_3 are more appropriately considered in the context of the review of the O_3 NAAQS, rather than in this CO NAAQS review (PA, section 3.4). For these reasons, the Policy Assessment concluded that there is insufficient information at this time to support the consideration of a secondary standard based on CO effects on climate processes (PA, section 3.4).

B. Rationale for Proposed Decision

In considering a secondary standard for CO, the proposed conclusions presented in the proposal were based on the assessment and integrative synthesis of the scientific evidence presented in the ISA, building on the evidence described in the 2000 AQCD, as well as staff consideration of this evidence in the Policy Assessment and CASAC advice. As an initial matter, the proposal concluded that the currently available scientific information with respect to non-climate welfare effects, including ecological effects and impacts to vegetation, does not support a CO secondary standard. Secondly, with respect to climate-related effects, the proposal took note of staff considerations in the Policy Assessment and concurred with staff conclusions that information is insufficient at this time to provide support for a CO secondary standard. Thus, based on consideration of the evidence, staff considerations in the Policy Assessment, as well as the views of CASAC, the Administrator proposed to conclude that no secondary standards should be set at this time because, as in the past reviews, having no standard is requisite to protect public welfare from any known or anticipated adverse effects from ambient CO exposures.

C. Comments on Consideration of Secondary Standard

In considering the need for a secondary standard, the Administrator first notes the advice and recommendations from CASAC based on their review of two drafts of the Integrated Science Assessment and of the draft Policy Assessment. With regard to consideration of a secondary standard for CO, CASAC noted without objection or disagreement the staff's conclusions that there is insufficient information to support consideration of a secondary standard at this time (Brain and Samet, 2010c). One public comment generally concerning EPA's proposed decision on a secondary standard is addressed below. Other more specific public comments related to consideration of a secondary standard are addressed in the Response to Comments document.

One comment (joint submission from Center for Biological Diversity and others) stated that due to the global influence of CO on climate, EPA must

establish a secondary NAAQS. The comment provided no information as to what form, level, or other elements of a secondary standard would be appropriate in light of the substantial uncertainties and regional variation in the indirect effects of CO. Rather, the comment asserted that there is ''a substantial body of knowledge, as reviewed in the ISA, regarding CO and climate'' and that ''uncertainty does not absolve the EPA of the obligation to protect public welfare'' (Center for Biological Diversity comments at p. 9).

As noted by the commenter, the ISA reviewed the body of knowledge regarding CO and climate. As discussed above, the ISA concluded that CO has climate-related effects, that the direct effects of CO are weak, that there are significant uncertainties concerning the indirect climate effects of CO, and that these effects appear to be highly variable and dependent on localized conditions. Further, as noted in the Policy Assessment, the spatial and temporal variation in emissions and concentrations of CO and the localized chemical interdependencies that cause the indirect climate effects of CO make it highly problematic to evaluate the indirect effects of CO on climate. In light of the fact that the climate effects of CO are not only uncertain but highly variable and dependent on local conditions (*e.g.,* concentrations of other pollutants), EPA believes that there is not adequate information available to conclude that a secondary standard in the United States is requisite to protect public welfare. The comment points to the estimated global effects of CO on climate, but nowhere does the comment provide evidence that EPA's conclusion regarding adequacy of the available information is in error.

EPA fully appreciates that the NAAQS are often established on the frontiers of scientific knowledge, and EPA continually assesses scientific uncertainties in judging what NAAQS are requisite to protect public health and welfare. EPA is not asserting that the fact that there are some uncertainties prevents EPA from setting a standard. Rather, EPA has judged that, in light of both the significant uncertainties and the evidence of the direct effects being weak and the indirect effects being highly variable and dependent on local conditions, particularly in light of CO's short lifetime, it is not possible to anticipate how any secondary standard that would limit ambient CO concentrations in the United States would in turn affect climate and thus any associated welfare effects. As additionally discussed in section III.D below, EPA has reviewed the available information and judged the absence of a standard as being requisite to protect public welfare.

D. Conclusions Concerning a Secondary Standard

The conclusions presented here are based on the assessment and integrative synthesis of the scientific evidence presented in the ISA, building on the evidence described in the 2000 AQCD, as well as staff consideration of this evidence in the Policy Assessment and CASAC advice, and with consideration of the views of public commenters on the need for a secondary standard.

In considering whether the currently available scientific information supports setting a secondary standard for CO, EPA takes note of the ISA and Policy Assessment consideration of the body of available evidence (briefly summarized above in section III.A). First, EPA concludes that the currently available scientific information with respect to non-climate welfare effects, including ecological effects and impacts to vegetation, does not support the need for a CO secondary standard. Secondly, with respect to climate-related effects, the EPA takes note of the ISA's conclusions that there are significant uncertainties concerning the indirect climate effects of CO, and that these effects appear to be highly variable and dependent on localized conditions as well as staff considerations in the Policy Assessment and concurs with staff conclusions that information is insufficient at this time to support the need for a CO secondary standard. More specifically, as more fully discussed in consideration of public comments in section III.C above, EPA has judged that, in light of both the significant uncertainties and the evidence of the direct effects of CO on climate being weak and the indirect effects being highly variable and dependent on local conditions, particularly in light of CO's short lifetime, it is not possible to anticipate how any secondary standard that would limit ambient CO concentrations in the United States would affect climate. Consequently, information that might indicate the need for additional protection from CO environmental effects and on which basis EPA might identify a secondary standard for the purposes of protecting against CO effects on climate processes is not available.

Thus, in considering the evidence, staff considerations in the Policy Assessment summarized here, as well as the views of CASAC and the public, summarized above, the Administrator concludes that no secondary standards should be set at this time because, as in the past reviews, having no standard is requisite to protect public welfare from any known or anticipated adverse effects from ambient CO exposures.

IV. Amendments to Ambient Monitoring Requirements

The EPA is finalizing changes to ambient air CO monitoring methods and the ambient monitoring network design requirements to support the NAAQS for CO discussed above in Section II. Because ambient CO monitoring data are essential to the implementation of the NAAQS for CO, EPA is finalizing minimum monitoring requirements for the ambient CO monitoring network. State, local, and Tribal monitoring agencies (''monitoring agencies'') collect ambient CO monitoring data in accordance with the monitoring requirements contained in 40 CFR parts 50, 53, and 58.

A. Monitoring Methods

This section provides background and rationale for the amendments that EPA proposed to the Federal Reference Method (FRM) for CO and to the associated performance specifications for automated CO analyzers. It also discusses the public comments on those proposed amendments and the few minor changes made to them as they are being promulgated today.

The use of FRMs for the collection of air monitoring data provides uniform, reproducible measurements of pollutant concentrations in ambient air. Federal equivalent methods (FEMs) allow for the introduction of new or alternative technologies for the same purpose, provided these methods produce measurements directly comparable to the reference methods. EPA has established procedures for determining and designating FRMs and FEMs at 40 CFR part 53.

For ambient air monitoring data for CO to be used for determining compliance with the CO NAAQS, such data must be obtained using either an FRM or an FEM, as defined in 40 CFR parts 50 and 53. All CO monitoring methods in use currently by state and local monitoring agencies are EPA-designated FRM analyzers. No FEM analyzer, *i.e.* one using an alternative measurement principle, has yet been designated by EPA for CO. These continuous FRM analyzers have been used in monitoring networks for many years and provide CO monitoring data adequate for determining CO NAAQS compliance. The current list of all approved FRMs capable of providing ambient CO data for this purpose may be found on the EPA Web site, *http://www.epa.gov/ttn/amtic/files/ambient/*

criteria/reference-equivalent-methods-list.pdf. Although both the existing CO FRM in 40 CFR part 50 and the FRM and FEM designation requirements in part 53 remain adequate to support the CO NAAQS, EPA nevertheless proposed editorial revisions to the CO FRM and both technical and editorial revisions to part 53, as discussed below.

1. Proposed Changes to Parts 50 and 53

Reference methods for criteria pollutants are described in several appendices to 40 CFR part 50; the CO FRM is set forth in appendix C. A non-dispersive infrared photometry (NDIR) measurement principle is formally prescribed as the basis for the CO FRM. Appendix C describes the technical nature of the NDIR measurement principle stipulated for CO FRM analyzers as well as two acceptable calibration procedures for CO FRM analyzers. It further requires that an FRM analyzer must meet specific performance, performance testing, and other requirements set forth in 40 CFR part 53.

The CO FRM was first promulgated on April 30, 1971 (36 FR 8186), in conjunction with EPA's establishment (originally as 42 CFR part 410) of the first NAAQS for six pollutants (including CO) as now set forth in 40 CFR part 50. The method was amended in 1982 and 1983 (47 FR 54922; 48 FR 17355) to incorporate minor updates, but no substantive changes in the fundamental NDIR measurement technique have been made since its original promulgation.

In connection with the current review of the NAAQS for CO, EPA reviewed the existing CO FRM to determine if it was still adequate or if improved or more suitable measurement technology has become available to better meet current FRM needs as well as potential future FRM requirements. EPA determined that no new ambient CO measurement technique has become available that is superior to the NDIR technique specified for the current FRM, and that the existing FRM continues to be well suited for both FRM purposes and for use in routine CO monitoring. No substantive changes were needed to the basic NDIR FRM measurement principle. Several high quality FRM analyzer models have been available for many years and continue to be offered and supported by multiple analyzer manufacturers.

However, EPA found that the existing CO FRM should be improved and updated to clarify the language of some provisions, to make the format match more closely the format of more recently promulgated automated FRMs, and to better reflect the design and improved performance of current, commercially available CO FRM analyzers. Accordingly, EPA proposed appropriate, albeit minor, changes to the FRM. Because these mostly editorial changes were quite numerous, the entire text of the CO FRM was revised and re-proposed.

In close association with the proposed editorial revision to the CO FRM described above, EPA also proposed to update the performance requirements for CO FRM analyzers that are contained in 40 CFR part 53. These requirements were established in the 1970's, based primarily on the NDIR CO measurement technology available at that time. While the fundamental NDIR measurement principle, as implemented in commercial FRM analyzers, has changed little over several decades, FRM analyzer performance has improved markedly. Contemporary advances in digital electronics, sensor technology, and manufacturing capabilities have permitted today's NDIR analyzers to exhibit substantially improved measurement performance, reliability, and operational convenience at modest cost. This improved instrument performance was not reflected in the previous performance requirements for CO FRM analyzers specified in 40 CFR part 53, indicating a need for an update to reflect that improved performance.

The updated performance requirements that EPA proposed for CO analyzers make them more consistent with the typical performance capability available in contemporary FRM analyzers and will ensure that newly designated FRM analyzers will have this improved measurement performance. A review of analyzer manufacturers' specifications has determined that all existing CO analyzer models currently in use in the monitoring network already meet the proposed new requirements (for the standard measurement range). Also in conjunction with this modernization of the analyzer performance requirements, EPA proposed new, more stringent performance requirements applicable, on an optional basis, to analyzers that feature one or more lower, more sensitive measurement ranges. Such lower ranges will support improved monitoring data quality in areas of low CO concentrations.

These updated and new performance requirements are being promulgated as amendments to subpart B of 40 CFR part 53, which prescribes the explicit procedures to be used for testing specified performance aspects of candidate FRM and FEM analyzers, along with the minimum performance requirements that such analyzers must meet to qualify for FRM or FEM designation. In particular, the new performance requirements appear in table B–1 of subpart B of 40 CFR part 53. Although table B–1 covers candidate methods for sulfur dioxide (SO_2), O_3, CO, and NO_2, the updates to table B–1 that EPA is promulgating today affect only candidate methods for CO.

The updated performance requirements apply to candidate CO analyzers that operate on the specified ''standard'' measurement range (0 to 50 ppm). This measurement range remains unchanged from the existing requirements as it appropriately addresses the monitoring data needed for assessing attainment. The measurement noise limit is reduced from 0.5 to 0.2 ppm, and the lower detectable limit is reduced from 1 to 0.4 ppm. Limits for zero drift and span drift are lowered, respectively, from 1.0 to 0.5 ppm, and from 2.5% to 2.0%. The previously existing mid-span drift limit requirement, tested at 20% of the upper range limit (URL), is withdrawn, as EPA has found that the mid-span drift requirement was unnecessary for CO instruments because the upper level span drift (tested at 80% of the URL) completely and more accurately measures analyzer span drift performance.

The lag time limit is reduced from 10 to 2 minutes, and the rise and fall time limits are lowered from 5 to 2 minutes. For precision, EPA is changing the form of the precision limit specifications from an absolute measure (ppm) to percent (of the URL) for CO analyzers and setting the precision limit at 1 percent tested at both 20% and 80% of the URL. One percent is equivalent to the previous limit value of 0.5 ppm for precision for the standard (0 to 50 ppm) measurement range. This change in units from ppm to percent makes the requirement responsive to higher and lower measurement ranges (*i.e.,* more demanding for lower ranges).

The interference equivalent limit of 1 ppm for each interferent is not changed, but EPA is withdrawing the previously existing limit requirement for the total of all interferents. EPA has found that the total interferent limit is unnecessary because modern CO analyzers are subject to only a few interferences, and they tend to be well controlled.

The new performance requirements apply only to newly designated CO FRM or FEM analyzers; however, essentially all existing FRM analyzers in use today, as noted previously, already meet these requirements, so existing FRM analyzers are not required to be re-tested and re-

designated under the new requirements. All currently designated FRM analyzers retain their original FRM designations.

EPA also recognized that some CO monitoring objectives (*e.g.,* area-wide monitoring away from major roads and rural area surveillance) require analyzers with lower, more sensitive measurement ranges than the standard range used for typical ambient monitoring. To improve data quality for such lower-range measurements, EPA is adding a separate set of performance requirements that apply specifically to lower ranges (*i.e.,* those having a URL of less than 50 ppm) for CO analyzers. These additional, lower-range requirements are listed in the revised table B–1. A candidate analyzer that meets the table B–1 requirements for the standard measurement range (0 to 50 ppm) can optionally have one or more lower ranges included in its FRM or FEM designation by further testing to show that it also meets these supplemental, lower-range requirements.

Although no substantive changes were determined to be needed to the test procedures and associated provisions of subpart B for CO, the detailed language in many of the subpart B sections was in need of significant updates, clarifications, refinement, and (in a few cases) correction of minor typographical errors. These changes to the subpart B text (apart from the changes proposed for table B–1 discussed above) are very minor and almost entirely editorial in nature, but quite numerous. Therefore, EPA has revised and is re-promulgating the entire text of subpart B text.

As discussed previously, table B–1, which sets forth the pollutant-specific performance limits, is being amended only as applicable to CO analyzers. EPA amended table B–1 as applicable to SO_2 methods on June 22, 2010 and intends to amend table B–1 for O_3 and NO_2 later, if appropriate, when the associated NAAQS are reviewed.

2. Public Comments

EPA notes first that CASAC stated that ''more sensitive and precise monitors need to be deployed to measure levels that are less than or equal to 1 ppm.'' (Brain and Samet 2010b). Comments from the public on the proposed revisions to CO monitoring methods are addressed in this section or in the Response to Comments document. Comments on the proposed changes to the CO monitoring methodology were received from only one member of the public, the American Petroleum Institute. The commenter was generally supportive of EPA's efforts to clarify and update the regulations for the CO FRM and the CO analyzer performance requirements. In regard to the CO FRM (40 CFR part 50, appendix C), the commenter questioned EPA's proposed relaxation in a flow rate control requirement in the dilution-method calibration procedure, from 1% to 2%. However, EPA believes that the original 1% requirement is unnecessarily stringent, and that this change is appropriate and commensurate with the existing 2% flow rate measurement accuracy and with the overall calibration accuracy needed to obtain adequate data quality with the method.

To further improve clarity of the FRM calibration section, the commenter also suggested a minor change to Equation 1 and the addition of language indicating that the measurement display or read-out device connected to the analyzer to monitor its reading during calibration should be the actual, or at least closely representative of the actual, data recording system used during field operation of the analyzer. EPA has accepted both of these suggestions, and appropriate changes have been incorporated into the changes being made to the CO FRM in this action.

Another comment questioned the proposed withdrawal of the previous total interference limit requirement. In response to this comment, EPA re-evaluated the efficacy of this limit for CO analyzers and again determined that the limit was not necessary, because the number of individual interferences to which FRM (and most potential FEM) CO analyzers are subject is small (only 2 for FRMs), as listed in table B–3 of 40 CFR part 53. Also, response to these interferents is typically well controlled in modern CO analyzers. In addition, the new, individual interference limit for the lower measurement ranges is one half the limit for the standard range, which further mitigates any need for a separate, total interference limit.

The commenter questioned EPA's proposed withdrawal of the previously existing limit requirement for span drift measured at 20% of the upper range limit (URL), contending that this limit was important because it is closer in concentration to the existing NAAQS than the span drift measured at 80% of the URL. However, the purpose of the span drift limit is not to directly assess measurement error at a particular, mid-scale concentration level. That purpose is served by the 1-point quality control check for CO monitors described in section 3.2.1 of appendix A of 40 CFR part 58. Rather, for the purpose of analyzer performance testing, the linear input/output functional characteristic of the analyzer is best described by its zero point and its slope, because these parameters are generally subject to change (drift) independently. Thus, zero drift (change in the zero point) and span drift (change in the slope) are tested separately. Zero drift is, of course, measured at zero concentration, and span drift is most accurately measured at a concentration near the URL. The span drift test at 80% URL (when the zero drift is within the specified requirement) more accurately determines any change in the slope parameter then a test at 20% URL. The previously specified test at 20% URL thus serves little, if any, purpose in regard to determining change in the slope. Therefore, EPA has concluded that this requirement can be withdrawn.

Finally, the commenter was concerned that existing FRM analyzers approved under the previously existing performance requirements may provide data quality inferior to that of analyzers approved under the proposed new requirements and that older analyzers may be unacceptable for some applications that demanded higher performance or higher data quality. A ''tiered'' approach was suggested to handle this situation.

In proposing more stringent performance requirements for approval of new FRM and FEM analyzers, EPA noted that the performance of analyzers approved under the existing performance requirements was fully adequate for most routine compliance monitoring applications, and that the proposed new requirements were largely to bring the base FRM and FEM performance requirements up to date and more commensurate with the performance of modern commercially available CO analyzers. EPA further noted that all currently designated FRM analyzers already meet the proposed new requirements. This means that the quality of routine CO monitoring data currently being obtained is already of the higher level portended by the proposed new performance requirements.

In the proposal, however, EPA did recognize that some special CO monitoring applications do require a higher level of performance than that required for routine applications. Therefore, EPA is promulgating optional, more stringent performance requirements for analyzers having a more sensitive, ''lower range'' available for such applications. This is, in fact, a ''tiered'' approach. Applicants would be able to elect to have such lower ranges approved as part of their FRM or FEM designation. These new, special performance requirements will alert monitoring agencies that they should

consider low-range performance of an analyzer for those applications that may require better low-level performance, and they can select an analyzer that has such a lower range approved under its FRM (or FEM) designation.

3. Decisions on Methods

As discussed above, a few relatively minor changes have been incorporated into the proposed revised CO FRM in appendix C of part 50, in response to public comments received by EPA. With these changes, the revised appendix C is being promulgated as otherwise proposed. Only one change has been made to the revision proposed for subpart B of part 53, to fix a typographical error that appeared in proposed table B–1 concerning reversed entries for the span drift limits for the 20% and 80% URL for the CO ''lower range'' column. Aside from this correction, the revised subpart B is being promulgated exactly as proposed.

B. Network Design

This section on CO network design provides information on the proposed network design, the public comments received on the proposed network design, and the EPA's conclusions, including rationale and details, on the final changes to the CO network design requirements.

1. Proposed Changes

The objective of an ambient monitoring network is to (1) provide air pollution data to the general public in a timely manner, (2) support compliance with ambient air quality standards and emissions strategy development, and (3) provide support for air pollution research (40 CFR part 58, appendix D). The proposed CO network design was intended to directly support the NAAQS by requiring monitoring that provides data for use in the designation process and ongoing assessment of air quality. In particular, the proposed network design was intended to require a sufficient number of monitors to collect data for compliance purposes in the near-road environment, where, as noted in section II.A.1 above, the highest ambient CO concentrations generally occur, particularly in urban areas (ISA, section 3.5.1.3; REA, section 3.1.3).

The EPA proposed CO monitors to be required within a subset of near-road NO_2 monitoring stations, which are required in 40 CFR part 58, appendix D, section 4.3. Per the preamble to the final rule for the NO_2 NAAQS promulgated on February 9th, 2010 (75 FR 6474), near-road NO_2 monitoring stations are intended to be placed in the near-road environment at locations of expected maximum 1-hour NO_2 concentrations and are triggered for metropolitan areas based on Core Based Statistical Area (CBSA) population thresholds and a traffic-related threshold based on annual average daily traffic (AADT).[29] The EPA proposed that CO monitors be required to operate in any CBSA having a population of 1 million or more persons, collocated with required near-road NO_2 monitoring stations. Based upon 2009 Census Bureau estimates and 2008 traffic statistics maintained by the US Department of Transportation (US DOT) Federal Highways Administration (FHWA), the CO monitoring proposal was estimated to require approximately 77 CO monitors to be collocated with near-road NO_2 monitors within 53 CBSAs.[30]

The EPA proposed that any required near-road CO monitors shall be reflected in State annual monitoring network plans due in July 2012. Further, the Agency proposed that required near-road CO monitors be operational by January 1, 2013. Due to the proposed collocation of required CO monitors with required near-road NO_2 monitors, these implementation dates were proposed in order to match those of the forthcoming near-road NO_2 monitoring network.

In light of the proposal to require near-road CO monitors be collocated with required near-road NO_2 monitors, the EPA proposed that siting criteria for microscale CO monitors be revised to match those of microscale near-road NO_2 monitors (and also microscale $PM_{2.5}$ monitors). In particular, the EPA proposed that microscale CO siting criteria for probe height and horizontal spacing be changed to match those of near-road NO_2 monitors as prescribed in 40 CFR part 58 appendix E, sections 2, 4(d), 6.4(a), and table E–4. Specifically, EPA proposed the following: (1) To allow microscale CO monitor inlet probes to be between 2 and 7 meters above the ground; (2) that microscale near-road CO monitor inlet probes be placed so they have an unobstructed air flow, where no obstacles exist at or above the height of the monitor probe, between the monitor probe and the outside nearest edge of the traffic lanes of the target road segment; and (3) that required near-road CO monitor inlet probes shall be as near as practicable to the outside nearest edge of the traffic lanes of the target road segment, but shall not be located at a distance greater than 50 meters in the horizontal from the outside nearest edge of the traffic lanes of the target road segment.

Finally, the EPA recognized that a single monitoring network design may not always be sufficient for fulfilling specific or otherwise unique data needs or monitoring objectives for every area across the nation. As such, the EPA proposed to provide the Regional Administrators with the discretion to require monitoring above the minimum requirements as necessary to address situations where minimum monitoring requirements are not sufficient to meet monitoring objectives.

2. Public Comments

EPA first notes that CASAC expressed concern over the current monitoring network, stating ''[m]ore extensive coverage may be warranted for areas where concentrations may be more elevated, such as near roadway locations. The Panel found that in some instances current networks underestimated carbon monoxide levels near roadways.'' (Brain and Samet 2010b). General comments from the public based on relevant factors that either support or oppose the proposed changes to the CO network design are addressed in this section. Specific public comments related to the network design, but with regard to material which was not specifically proposed by the EPA or posed for solicitation of comment, are addressed in the Response to Comments document.

a. Near-Road Monitoring and Collocation With Near-Road Nitrogen Dioxide Monitors

The EPA received multiple public comments on the overall merit of monitoring for CO in the near-road environment, the proposal that required CO monitors be collocated with required near-road NO_2 monitors, and the number of required CO monitors that might be appropriate. In general, public health and environmental groups (*e.g.,* American Lung Association [ALA], American Thoracic Society [ATS], Environmental Defense Fund [EDF]), some states or state environmental agencies or organizations (*e.g.* National Association of Clean Air Agencies [NACAA], Northeast States for Coordinated Air Use Management [NESCAUM], New York State Department of Environment Conservation [NYSDEC], and State of Wisconsin Department of Natural

[29] One near-road NO_2 monitor is required in any CBSA having a population of 500,000 or more persons. Two near-road NO_2 monitors are required in any CBSA having a population of 2.5 million or more persons, or in any CBSA that has one or more road segments with an AADT count of 250,000 or more (40 CFR part 58, appendix D, section 4.3).

[30] Since the proposal, EPA has estimated that using 2010 Census Bureau counts the proposed rule would have resulted in approximately 75 monitors in 52 CBSAs being required.

Resources [WIDNR]), and some private citizen commenters provided support for a requirement for CO monitors in the near-road environment. For example, ALA, ATS, and EDF state that they ''* * * are pleased to see EPA take seriously the public health threats that are posed to millions of residents and other sensitive receptors who live near or work on or near highways as well as other high exposure areas.'' They go on to note that ''[near-road ambient monitoring] data have been sorely lacking from the national monitoring network and are long overdue.'' Further, many of the commenters who were supportive of near-road monitoring were supportive of collocating CO monitors with near-road NO_2 monitors as it establishes multipollutant monitoring within the ambient air monitoring network. For example, NACAA stated the following in their comments: ''* * * NACAA supports EPA's proposal to collocate CO near roadway monitors at a subset of NO_2 near-roadway sites. This is consistent with the recommendations of EPA's Clean Air Scientific Advisory Committee (CASAC), which urged the agency to develop the near roadway monitoring network with a multipollutant focus and included CO in its list of pollutants that should be measured.''

Some industry commenters (*e.g.,* Association of Automobile Manufacturers [AAM] and American Electric Power Service Corporation [AEPSC]) and a number of other states or state groups (*e.g.,* Indiana Department of Environmental Management [IDEM], North Carolina Department of Air Quality [NCDAQ], New Mexico Air Quality Bureau [NMAQB], South Carolina Department of Health and Environmental Control [SCDHEC], Southeast Michigan Council of Governments [SEMCOG], and Texas Commission on Environmental Quality [TCEQ]) generally did not support the proposed near-road CO monitoring requirements. For example, IDEM stated that ''CO measured by roadside monitors is not representative of ambient air quality everywhere in a city or county containing the roadway'' and that ''* * * roadside monitoring measurements represent source-specific data. Therefore, Indiana does not believe that roadside monitoring should apply to an ambient air quality standard.'' SCDHEC stated it ''* * * does not believe that the use of a near-road monitoring network in a state-wide ambient air monitoring network is the appropriate choice to protect our community's public health'' and that ''this monitoring method biases the monitoring effort into areas of little or no population while monitoring for the community population exposure is neglected.'' Similarly, industry commenter AAM stated that ''the current proposal does not include a requirement that the near-roadway monitors be sited in locations where there is actual human exposure to the ambient air for time periods corresponding to the 1-hour or 8-hour CO NAAQS.''

The EPA stated in the CO proposal (76 FR 8158) that the proposed near-road CO monitoring requirements were intended to ensure a network of adequate size and focus to provide data for comparison to the NAAQS, support health studies and model verification, and to fulfill Agency multipollutant monitoring objectives. In response to the comment that near-road monitoring data would be ''source-specific'' and may not be appropriately applicable to an ambient air standard, the Agency notes that monitoring for CO in the near-road environment (as a mobile source oriented measurement) is a longstanding agency practice, as evidenced by the first monitoring rule promulgated in 1979 (44 FR 27558, May 10, 1979). That 1979 monitoring rule included the requirement to monitor for ''peak'' CO concentrations in urban areas having populations of 500,000 people or more in locations ''* * * around major traffic arteries and near heavily traveled streets in downtown areas.'' The Agency believes that the use of near-road CO monitors as proposed is not a departure from the Agency's longstanding intent to measure peak concentrations of CO in the near-road environment. Rather, the proposal was consistent with the Agency's approach to require monitors for CO, and other criteria pollutants, in locations that likely experience peak ambient concentrations. The Agency also notes that source-oriented monitoring is and has long been a common practice in ambient monitoring networks, although more often associated with stationary sources, where the ambient data collected are used for comparison to the NAAQS. Data on ambient air concentrations, including near-road data, which may be most appropriately classified as on-road mobile source oriented, are appropriate to compare to the NAAQS.

With regard to the comments asserting that near-road monitoring would result in monitoring areas of ''little or no population'' and thus population exposure is not represented, the EPA notes that on-road mobile sources are ubiquitous in urban areas and are a dominant component of the national CO emissions inventory, at nearly 60% of the total inventory, based on the 2008 NEI. As such, microenvironments influenced by on-road mobile sources are important contributors to ambient CO exposures, particularly in urban areas (REA, section 2.7). Further, the ambient CO exposures of most concern are short-term. Accordingly, near-road monitoring is focused on characterizing peak or elevated ambient concentrations. The relevance of this focus for the purposes of both ensuring compliance with the NAAQS and gathering data to inform our consideration of ambient CO exposures is demonstrated by the ubiquity of on-road mobile sources throughout urban areas, the time spent by people on or near roadways and the large number of American citizens living in urban areas and near roadways. As was noted in the ISA, the 2007 American Housing Survey (*http://www.census.gov/hhes/www/housing/ahs/ahs07/ahs07.html*) estimates that 17.9 million housing units are within 300 feet (~91 meters) of a 4-lane highway, airport, or railroad. Using the same survey, and considering that the average number of residential occupants in a housing unit is approximately 2.25, an estimate can be made that at least 40 million American citizens live near 4-lane highways, airports, or railroads. Among these three transportation facilities, roads are the most pervasive of the three, suggesting that a significant number of people may live near major roads. Furthermore, the 2008 American Time Use Survey (*http://www.bls.gov/tus/*) reported that the average U.S. civilian spent over 70 minutes traveling per day. Based on these considerations, the Agency has concluded that monitoring in the near-road environment would characterize the ambient concentrations that contribute to ambient CO exposure for a significant portion of the population that would otherwise not be captured.

The AAM also commented that the EPA ''* * * proposal to locate more near roadway monitors appears to be an attempt to find problems where none are likely to exist.'' The Agency proposal for near-road monitors is in line with longstanding monitoring objectives to monitor for peak or elevated ambient pollutant concentrations where they may occur. The Agency agrees that CO is no longer as pervasive a problem as it was in the past; however, there is still a responsibility to appropriately characterize and assess ambient concentrations to ensure that they do not exceed the NAAQS. In comments on the first draft of the ISA, CASAC advised that ''* * * relying only on

EPA's [current] fixed monitoring network, CO measurements may underestimate CO exposures for specific vulnerable populations such as individuals residing near heavily trafficked roads and who commute to work on a daily basis.'' In comments on the second draft of the ISA, CASAC commented that ''the panel expresses concern about the existing CO monitoring network, both for its [spatial] coverage and for its utility in estimating human exposure'' and that ''CO exposures may not be adequately characterized for populations that may be exposed to higher CO levels because of where they live and work,'' such as the near-road environment. Finally, in comments on the second draft of the REA, CASAC stated that ''the approach for siting monitors needs greater consideration. More extensive coverage may be warranted for areas where concentrations may be more elevated, such as near-roadway locations.'' In light of these comments and upon a review of the existing CO network, the Administrator concluded that the current CO monitoring network (circa 2010) lacked a necessary focus. While some currently existing sites that were established in the 1970s and 1980s continue to monitor near-road locations in downtown areas or within urban street canyons, and a minimum number of area-wide monitors are currently required at National Core (NCore) multipollutant stations, few monitors exist that characterize the more heavily trafficked roads that are prevalent in the modern roadway network, particularly in our larger urban areas. The Agency's proposal was intended to require a modest but appropriate number of CO monitors to characterize the near-road environment where peak or elevated ambient CO concentrations are expected to occur near heavily trafficked roads, as compared with neighborhood or urban background concentrations. If CO levels turn out to be low in these near-road locations, so much the better for public health, and monitoring networks can be adjusted in the future, as they have over time in response to an increased understanding of where levels of concern to public health are likely to occur.

Although the EPA received a number of comments that were largely supportive for the proposed requirement of collocating CO monitors within the forthcoming near-road NO_2 monitoring stations, several commenters encouraged the Agency to provide flexibility to allow for the separation of the newly required CO monitors from the near-road NO_2 sites, if necessary, to better monitor peak near-road CO concentrations. In their comments supporting the collocation concept, NACAA also stated that their organization ''* * * also encourages EPA to allow flexibility for state and local agencies to use alternative siting of near-roadway CO monitors on a case-by-case basis, where there is a scientific justification for siting the CO monitor in a different location from the NO_2 monitor, to ensure the best possible measurement of near roadway CO concentrations.'' Similarly, NCDAQ recognized that ''* * * light duty vehicles tend to have more impact on CO concentrations than do heavy [duty] vehicles'' and went on to surmise that ''* * * not all near-road NO_2 monitoring stations will be well situated to measure maximum CO concentrations.''

The Agency has expressed its intent to pursue the integration of monitoring networks and programs through the encouragement of multipollutant monitoring wherever possible, as evidenced by actions taken in the 2006 monitoring rule that created the NCore network, the expression of the multipollutant paradigm in the 2008 Ambient Air Monitoring Strategy for State, Local, and Tribal Air Agencies, and within this rulemaking process as part of the rationale in proposing the collocation of required near-road CO monitors with near-road NO_2 monitors. Multipollutant monitoring is viewed as a means to broaden the understanding of air quality conditions and pollutant interactions, furthering the capability to evaluate air quality models, develop emission control strategies, and support research, including health studies. However, the Agency also recognizes that the measurement objectives of individual pollutants may not always correspond in a way that would support multipollutant monitoring as the most appropriate option in a network design. On the issue raised by NACAA and NCDAQ concerning the potential difference in locations of peak CO and NO_2 concentrations in the near-road environment, the EPA recognizes the primary influence to be the different emission characteristics between light duty (LD) and heavy duty (HD) vehicles and vehicle operating conditions, which were discussed in section III.B.2 of the CO proposal. The public comments suggesting the need for flexibility in siting near-road CO monitors derives from the fact that near-road NO_2 sites will be sited at locations where peak NO_2 are expected to occur. Since NO_2 is more heavily influenced by HD vehicles and CO is more heavily influenced by LD vehicles on a per vehicle basis, respectively, there may be cases where the peak CO and NO_2 concentrations could occur along different road segments within the same CBSA. As a general observation, the EPA believes that this situation may have more likelihood of occurring in the relatively larger (by population) CBSAs where a higher number of heavily trafficked roads with a wider variety of fleet mix (*e.g.* HD to LD vehicle ratios) tend to exist versus relatively smaller CBSAs. In recognition of these considerations, the final regulation allows for flexibility in CO monitor placement in the near-road environment when justified, as discussed below in section IV.B.3.

b. Population Thresholds for Requiring Near-Road Carbon Monoxide Monitors

The EPA proposed that required CO monitors be collocated with every required near-road NO_2 monitor in a CBSA with a population of 1 million or more persons. Due to the requirement to locate one CO monitor at each required near-road NO_2 site, the proposal would have required two monitors in each CBSA having 2.5 million or more persons or having one or more road segments with Annual Average Daily Traffic (AADT) counts of 250,000 or more. The proposal would have also required one monitor within those CBSAs having 1 million or more persons (but fewer than 2.5 million persons).[31] Based upon 2009 Census Bureau estimates and US DOT maintained traffic summary data, the proposal was estimated to require 77 monitors within 53 CBSAs. Using recent 2010 Census data, and US DOT maintained traffic summary data, the proposal would have required approximately 75 monitors within 52 CBSAs.

The EPA received a number of comments supporting different population thresholds by which to require near-road CO monitors. Those state agencies or state agency groups who generally supported required CO monitoring in the near-road environment (*e.g.,* NACAA, NESCAUM, NYSDEC, and WIDNR) suggested a population threshold of 2.5 million by which near-road CO monitors should be required. In addition, NCDAQ, who did not support near-road CO monitoring,

[31] One near-road NO_2 monitor is required in any CBSA having a population of 500,000 or more persons. Two near-road NO_2 monitors are required in CBSAs with population of greater than 2.5 million, or in any CBSA with a population of 500,000 or more persons that has one or more roadway segments with annual average daily traffic (AADT) counts of 250,000 or more. (40 CFR part 58, Appendix D, Section 4.3).

suggested that if it is required, it be required only within CBSAs of 2.5 million or more. The use of a population threshold of 2.5 million persons, versus 1 million as proposed, would require approximately 42 near-road CO monitors within 21 CBSAs, based on 2010 Census data. Industry commenter American Petroleum Institute (API) stated that the proposed population threshold of 1 million persons ''* * * appears appropriate, but EPA should not require that both [near-road NO_2] sites in the largest CBSAs host CO monitors.'' API's suggestion would require approximately 52 near-road CO monitors within 52 CBSAs. Finally, the public health and environmental groups ALA, ATS, and EDF suggested the EPA promulgate minimum monitoring requirements ''* * * to encompass cities in smaller metro areas, including cities with populations of 500,000 or more, similar to the requirements for NO_2 roadside monitoring.'' ALA, ATS, and EDF's suggestion would result in the requirement of approximately 126 monitors within 103 CBSAs.

As was noted in the proposal, the Agency believes that with the continuing decline of ambient CO levels, as summarized in the EPA's most recent trends report *Our Nation's Air: Status and Trends Through 2008* (*http://www.epa.gov/airtrends/2010/*), there is less likelihood for high CO concentrations in relatively smaller CBSAs (by population). Accordingly, the Agency proposed the requirement for what it believed would be a sufficient number of CO monitors, which would be collocated with required near-road NO_2 monitors in CBSAs having populations of 1 million or more persons. The Administrator considered alternative population thresholds, including the 2.5 million and 500,000 person thresholds, but concluded that those thresholds would require too few or too many monitors, respectively, in light of existing information on CO emissions data, ambient data, and the lack of data for locations near highly trafficked roads. The rationale for the proposed 1 million person threshold was to require a modest but sufficiently sized network that would effectively assess near-road CO concentrations for comparison to the NAAQS and could also provide data from within a multipollutant framework to support research (which includes health studies), facilitate model verification, and assess and evaluate emissions control strategies. However, after considering public comments, the EPA has concluded that one monitor in each CBSA of 1 million or more persons will provide for monitoring of a wide range of diverse situations with regard to traffic volume, traffic patterns, roadway designs, terrain/topography, meteorology, climate, as well as surrounding land use and population characteristics. Accordingly, in the final rule EPA has modified the proposed requirements for CO monitors so that only one CO monitor is required in CBSAs of 1 million or more persons, as discussed in Section IV.B.3 below.

c. Implementation Schedule

The EPA received a number of comments on the timeline for implementation of any required CO monitoring promulgated as part of this rulemaking. ALA, ATS, and EDF stated that they ''* * * support EPA's requirement that CO monitors be installed in near-highway locations by July 1, 2013.'' In light of the support these commenters expressed for rapid deployment of near road CO monitors, these commenters may have intended to support the proposed implementation date of January 1, 2013 instead of July 1, 2013 as quoted. The Agency received a number of comments from state agencies, state agency organizations, and industry encouraging the Agency to extend the time by which any required monitoring must be implemented. For example, API suggested that the proposed date by which required near-road CO monitors be established be extended to July 1, 2013, while NACAA and WIDNR suggested January 1, 2014. Several commenters suggested that required near-road monitors should be phased in over a period of time. For example, NACAA, stated ''[i]t may be necessary to develop a program for phasing in new monitoring sites and reevaluate network implementation.'' NACAA also pointed to comments from CASAC that it would be advisable to phase in near-road monitoring for NO_2, because ''[t]he first round of sites could be used to gather information on appropriate siting in the near roadway environment, near roadway gradient, and spatial relationships.''

The EPA recognizes that states are already implementing newly required monitoring related to lead and NO_2, and that the current financial and logistical burdens may make the implementation of new monitoring requirements difficult. A number of state and industry commenters noted the need for funding to accommodate a new monitoring requirement, and some also noted the financial and logistical hardships that many states are currently experiencing (*e.g.,* IDEM, NACAA, NCDAQ, SCDHEC, and WIDNR). The EPA recognizes the significance of the financial and logistical burden that new monitoring requirements pose and the impact of multiple new monitoring requirements stemming from other recent rulemakings. As such, the Agency has taken these comments into consideration in the final rule with regard to when required CO monitors are to be operational, as discussed in Section IV.B.3 below.

d. Siting Criteria

The EPA received comments regarding the proposed revisions to microscale CO siting criteria. Those who commented (AAM, API, and NCDAQ) all supported having two sets of siting criteria that would apply to near-road CO monitors such as those that might be collocated with near-road NO_2 monitors and to those CO monitors operating in downtown areas and urban street canyon locations, respectively. AAM stated that ''* * * there should be two separate criteria for siting microscale CO monitors. The earlier height and distance guidelines are still appropriate for downtown areas and arterial highways with sidewalks, but a separate set of guidelines should be established for limited access, heavily-travelled expressways.'' API commented that ''* * * the proposed CO [near-road] criteria are acceptable. EPA should create two-tiered siting criteria for microscale CO monitoring * * *'' and that ''there will be an ongoing need for CO monitoring in downtown, urban and/or street canyon[s] for health-related concerns as well as SIP-related issues.'' Finally, NCDAQ stated that ''* * * the US EPA should maintain separate siting criteria for the two types of micro-scale CO monitoring sites * * *'' noting that the current siting criteria intended for downtown areas and urban street canyon sites ''* * * are still valid for that purpose and CO monitoring stations being placed for this purpose should still be required to meet these siting criteria.''

The EPA agrees with the commenters that the existing siting criteria are still appropriate for any existing or future downtown area or urban street canyon CO monitoring site, and that new siting criteria are appropriate for CO monitors being collocated with near road NO_2 monitors. As such, the Agency is finalizing siting criteria for microscale CO sites that include criteria for both downtown area/urban street canyon microscale sites and other near-road microscale CO sites, as presented below in Section IV.B.3.

e. Area-Wide Monitoring

The EPA received a number of comments from transportation groups,

public health and environmental groups, and an industry commenter (*e.g.,* AAM, ALA/ATS/EDF, American Association of State Highway and Transportation Officials [AASHTO], New York State Department of Transportation [NYSDOT], Texas Department of Transportation [TXDOT], and Virginia Department of Transportation [VDOT]) regarding the fate of many of the CO monitors in the current network that characterize concentrations representative of neighborhood or larger spatial scales,[32] known as area-wide monitors. For example, AASHTO commented that ''EPA appears to be proposing that CO monitoring sites to characterize area-wide CO concentration levels at the neighborhood and larger spatial scales is no longer required. AASHTO is concerned that this proposal will de-emphasize the need for neighborhood scale CO monitors.'' AASHTO and some state DOTs expressed that the data for neighborhood scale monitors are used for other purposes, such as National Environmental Policy Act (NEPA) and transportation conformity, and that they are concerned about the potential loss of these types of data in the future. In another example, ALA/ATS/EDF stated that they call upon EPA to ''establish a comprehensive roadside air pollution network, while retaining the current area-wide CO network.''

The EPA notes that prior to this final rulemaking, the only required CO monitoring within 40 CFR part 58, appendix D was for the operation of a CO monitor within all NCore multipollutant monitoring stations. There are approximately 80 NCore stations nationwide, and by design, they are area-wide monitoring sites. In the proposal, the Agency estimated that 345 CO monitors were operational at some point during 2009. A more recent examination of AQS data (utilizing EPA's Air Explorer Web tools located at *http://www.epa.gov/airexplorer*) indicate that approximately 328 CO monitors were operational as of May 20, 2011. These 328 active CO monitors include the 80 NCore monitors now in operation nationwide. This means that a significant portion of the current network is composed of monitors that are additional to those required by EPA as part of a national network design. It is critical to note that in this rulemaking the EPA is actually increasing the total number of required sites in the national CO monitoring network design and is not removing any area-wide monitoring requirements as AASHTO and other commenters suggested. Some of the potential for misperception on this issue may have arisen from the Agency's stated expectation that state and local air monitoring agencies will likely move existing CO monitors into near-road locations to satisfy the minimum monitoring requirements promulgated in this rulemaking. Based on this final rule, state and local agencies would only move, at most, approximately 52 monitors out of the 328 in operation (circa May 2011). Therefore a majority of CO monitors would likely continue operating in their existing locations. However, it should be noted that with ambient CO concentrations well below the NAAQS, particularly at area-wide sites, states may identify some area-wide CO monitors to be no longer necessary. As such, the retirement of these sites may be justified, and their removal would save state and local resources. The EPA does recognize the value of maintaining some level of area-wide CO monitoring to meet the overarching monitoring objectives, which includes tracking long-term trends and to support research. In the proposal, the Agency did not propose establishing requirements for additional area-wide monitoring sites because: (1) There is the existing NCore requirement, and (2) there is an expectation based on experience that some number of non-required area-wide sites will continue to operate in the future without minimum monitoring requirements. Regarding the removal or shutdown of any individual ambient air pollutant monitor, the Agency notes that there is a publicly transparent process by which any existing CO monitor would be shut-down. The shut-down of any State and Local Air Monitoring Station (SLAMS) monitor is allowable under certain conditions specified in 40 CFR 58.14 *System Modification.* These conditions provide state and local air agencies multiple options by which they may propose, with justification, for a monitor to be shut down. Whatever the justification may be, each monitor proposed to be shut-down must go through an established process to receive EPA Regional Administrator approval for shut-down. As part of that process, the EPA Regional Administrator provides opportunity for public comment before making a decision to approve or disapprove the request. In conclusion, the EPA believes that even without requirements for area-wide CO monitors additional to the NCore sites, some number of area-wide monitors will continue to operate into the future. EPA anticipates that monitors that states find useful for other regulatory purposes, such as NEPA, would be among the monitors that may continue to operate. The NCore sites, along with monitors currently operating in the absence of other area-wide monitoring requirements, will likely provide a sufficient set of area-wide monitors to meet monitoring objectives.

The EPA also received a number of comments from transportation groups, state and local groups, and an industry commenter (*e.g.,* AAM, AASHTO, NESCAUM, NYSDEC, NYSDOT, TXDOT, and VDOT) suggesting that required near-road CO monitors should be paired with an area-wide CO monitor within the same CBSA. For example, AASHTO recommended that ''* * * EPA ensure that adequate coverage continues from neighborhood-scale monitors to estimate background concentration levels, and that there is at least one neighborhood scale monitor in every urbanized area that is required to have a near-road monitor.'' NESCAUM recommended ''* * * that EPA locate near-road CO monitors near urban NCore CO sites'' (as noted above, NCore sites are area-wide sites by design).

The EPA recognizes that a pairing of near-road CO monitors with area-wide CO monitors will provide information by which an estimate of the difference between near-road concentrations to relative background concentrations might be determined. As noted earlier, the Agency believes that the combination of required NCore sites and those area-wide monitors currently operating in the absence of minimum monitoring requirements (of which many will likely continue operating in the future) will largely fulfill the area-wide component of any near-road site/area-wide site pairing in an urban area. An analysis of NCore site locations (site data available from *http://www.epa.gov/ttn/amtic/ncore/index.html*), along with

[32] Spatial scales are defined in 40 CFR Part 58 Appendix D, Section 1.2, where the scales of representativeness of most interest for the monitoring site types include:

1. Microscale—Defines the concentration in air volumes associated with area dimensions ranging from several meters up to about 100 meters.

2. Middle scale—Defines the concentration typical of areas up to several city blocks in size, with dimensions ranging from about 100 meters to 0.5 kilometers.

3. Neighborhood scale—Defines concentrations within some extended area of the city that has relatively uniform land use with dimensions in the 0.5 to 4.0 kilometers range.

4. Urban scale—Defines concentrations within an area of city-like dimensions, on the order of 4 to 50 kilometers. Within a city, the geographic placement of sources may result in there being no single site that can be said to represent air quality on an urban scale. The neighborhood and urban scales have the potential to overlap in applications that concern secondarily formed or homogeneously distributed air pollutants.

5. Regional scale—Defines usually a rural area of reasonably homogeneous geography without large sources, and extends from tens to hundreds of kilometers.

all those area-wide CO monitors believed to be operating as of May 20, 2011 (utilizing EPA's Air Explorer Web tools located at *http://www.epa.gov/airexplorer*) indicated that of the 52 CBSAs with a population of 1 million persons or more, based on 2010 Census data,, only 4 are believed to be without an area-wide CO monitor.[33] The EPA believes that, based on the considerations discussed above, the existing network will likely provide sufficient area-wide CO concentration information on which a near-road to area-wide data comparison could be based.

f. Regional Administrator Authority

The EPA received a number of comments from states and transportation groups (*e.g.,* AASHTO, NYSDOT, TCEQ, TXDOT, and VDOT) on the proposal for Regional Administrators to have the discretion to require monitoring above the minimum requirements as necessary to address situations where minimum monitoring requirements are not sufficient to meet monitoring objectives. For example, AASHTO commented that ''the proposed rule includes some examples of where additional monitors may be necessary. AASHTO is concerned that these brief examples may not be sufficient to ensure uniform application of this additional authority among the EPA Regions,'' and that EPA should provide guidance on this so that there is ''reasonable uniformity between EPA Regions in the implementation of these provisions.'' TCEQ commented that it ''does not agree that this discretion is appropriate, particularly where EPA has not proposed a process by which Regional Administrators must consult with states and the public regarding these decisions.'' Further TCEQ stated that ''* * * the potential requirement for additional monitors when 'minimum monitoring requirements are not sufficient to meet monitoring objectives' is overly broad and should be refined to include objective criteria that will consistently applied across all EPA Regions.''

The EPA notes that the authority of Regional Administrators to require additional monitoring above the minimum required is not unique to the CO NAAQS. For example, Regional Administrators have the authority to use their discretion to require additional NO_2, lead, and sulfur dioxide monitors (40 CFR part 58 appendix D sections 4.3.4, 4.4.3, and 4.5, respectively) and to work with state and local air agencies in designing and/or maintaining an appropriate ozone monitoring network (40 CFR part 58 appendix D section 4.1). The EPA believes that a nationally applicable network design may not always account for all locations in every area where monitors may be warranted. Example situations where the Regional Administrator authority could be utilized, which were provided in the proposal, could be for unmonitored locations where data or other information suggest that CO concentrations may be approaching or exceeding the NAAQS due to stationary CO sources, in downtown areas or urban street canyons, or in areas that are subject to high ground-level CO concentrations particularly due to or enhanced by topographical and meteorological impacts. The Agency cannot anticipate every example that may exist where the Regional Administrator authority might be used for inclusion in this preamble text. However, the Agency believes it is important for Regional Administrators to have the authority to address possible gaps in the minimally required monitoring network in situations such as those examples provided here. In response to public comments, the EPA notes that Regional Administrators would use their authority in collaboration with state agencies, working with stakeholders to design and/or maintain the most appropriate CO monitoring network to meet the needs of a given area. Finally, the Agency notes that any monitor required by the Regional Administrator (or any new monitor proposed by the state itself) is not done so with unfettered discretion. Any such action would be included in the Annual Monitoring Network Plan per 40 CFR 58.10, and this plan must be made available for public inspection and comment before any decisions are made by the EPA Regional Administrator.

3. Conclusions on the Network Design

This section provides the rationale and details for the final decision on changes to the CO monitoring network design and siting criteria. As discussed above in section IV.B.2.a, motor vehicle emissions are important contributors to ambient CO concentrations (REA, section 2.2), contributing nearly 60% of the total CO emitted nationally (per the 2008 NEI). As a result, microenvironments influenced by on-road mobile sources are important contributors to ambient CO exposures, particularly in urban areas (REA, section 2.7). Therefore, the Administrator has concluded that monitoring in the near-road environment to characterize and assess ambient CO concentrations continues to be an appropriate objective for the CO monitoring network. The EPA believes that the promulgation of minimum requirements for CO monitors in the near-road environment is necessary to ensure a network of adequate size and focus to provide data for comparison to the NAAQS, support research which includes health studies, allow for model verification, and fulfill multipollutant monitoring objectives. Further, considering the lack of CO monitors assessing higher trafficked roads in urban areas and CASAC's advice that the Agency develop greater monitoring capacity for CO in near-road environments (Brain and Samet, 2010b), the Agency believes that a number of CO monitors should be focused in such locations. Highly trafficked roads are expected to show elevated CO concentrations relative to area-wide concentrations and to represent the locations where ambient CO concentrations may be highest in an area. Regarding the locations where required near-road CO monitors might be placed, the EPA proposed that they be collocated with a subset of near-road NO_2 monitors. The EPA expects required near-road NO_2 monitors (as prescribed in 40 CFR part 58, appendix D, Section 4.3) to be adjacent to highly trafficked roads within the CBSAs where they are required. Recognizing this and also recognizing the benefits associated with collocating monitors at the same site, the Agency is finalizing requirements for CO monitors that will leverage required near-road NO_2 monitoring sites to house collocated near-road CO monitors to create data for comparison to the NAAQS, support research which includes health studies, provide data for model evaluation, and foster the fulfillment of multipollutant objectives.

As noted in section IV.B.2.b above, after considering public comments, EPA has modified the requirements for CO monitors from that which was proposed so that only one CO monitor is required in each CBSA in which near-road CO monitoring is required.[34] This approach reduces the total number of monitors that would have been required under the proposal from 75 monitors within 52 CBSAs to 52 monitors within 52 CBSAs (based on 2010 Census data). The EPA believes this network design addresses public comments while maintaining monitoring in a sufficiently diverse set

[33] The EPA notes that of the 52 CBSAs that have 1 million or more persons, 39 CBSAs contain an NCore monitoring station, which includes a CO monitor.

[34] This approach only requires one CO monitor to be installed in those CBSAs that have two required near-road NO_2 monitors.

of locations throughout 52 different urban areas around the country. By having monitors within 52 different CBSAs, this network design is expected to provide for monitoring in a wide range of diverse situations with regard to traffic volumes, traffic patterns, roadway designs, terrain/topography, meteorology, climate, as well as surrounding land use and population characteristics.

The EPA is generally requiring CO monitors to be collocated with near-road NO_2 monitors. However, upon consideration of public comments, the Agency is allowing flexibility for states to use an alternate near-road location, which includes downtown areas, urban street canyons, and other near-road locations. This flexibility is provided for a required CO monitor, on a case-by-case basis, with EPA Regional Administrator approval, when the state can provide quantitative justification showing the expectation of higher peak CO concentrations for that alternate location compared to a near-road NO_2 location. Such requests could be based upon appropriate modeling, exploratory monitoring, or other methods, comparing the alternative CO location and the near-road NO_2 location.

In summary, based upon 2010 Census Bureau data this final rule will require approximately 52 CO monitors to be collocated with near-road NO_2 monitors (or otherwise operated at an alternate, EPA Regional Administrator approved, near-road location where peak CO concentrations are expected) within 52 CBSAs that have populations of 1 million or more persons.

Regarding the deployment and operation of required CO monitors, the Agency recognizes that many state and local air agencies are under financial and related resource duress. EPA has concluded that allowing additional time for installing CO monitors will provide an opportunity for state and local agencies to work with EPA Regions to identify which existing CO monitors may be appropriate to relocate to the near-road locations. In many cases, EPA and the state may believe it is appropriate to relocate monitors, including some of those that are currently operated pursuant to existing maintenance plans. In these cases, additional time may be necessary to allow states to revisit and possibly revise, in consultation with (and subject to the approval of) the EPA Regions, existing maintenance plans in a way that may allow certain CO monitors to be free for relocation, if appropriate. Further, if a state chooses to investigate whether it will request that a required near-road CO monitor be sited in a near-road location other than a required near-road NO_2 site, the time allotted by the final rule is expected to provide states with adequate time to perform necessary analyses for submission to the Regional Administrator for approval. Furthermore, EPA has concluded that public comments suggesting a phased-in implementation, allowing for later stages to benefit from experience in an initial round of monitor installations, have merit.

As a result, the EPA has chosen not to require the implementation of required CO sites by January 1, 2013 as was proposed. Instead, the Agency is finalizing a two-phased implementation requirement. Those CO monitors required within CBSAs having 2.5 million or more persons are to be operational by January 1, 2015, although the Agency strongly encourages the implementation of these required monitors as soon as practicable. Those CO monitors required in CBSAs having 1 million or more persons (and fewer than 2.5 million persons) are to be operational by January 1, 2017. EPA intends to review the experience of states with the first round of near-road CO monitors and the data produced by such monitors and consider whether adjustments to the network requirements are warranted. These required CO monitors shall be reflected in a state's annual monitoring network plans due six months prior to installation, *i.e.,* on July 1, 2014 or July 1, 2016, respectively.

Regarding siting criteria, the EPA received public support to adjust microscale CO siting criteria to match those of near-road NO_2 monitors (and microscale $PM_{2.5}$ monitors). The Agency also was urged to retain the existing microscale siting criteria, for explicit use with microscale CO sites in downtown areas or urban street canyon settings. As a result, the EPA is retaining the existing siting criteria for microscale CO monitors in downtown areas and urban street canyons and is finalizing the additional siting criteria for those near-road microscale CO monitors outside of downtown areas and urban street canyons to have probe height and horizontal spacing to match those of near-road NO_2 monitors as prescribed in 40 CFR part 58 appendix E, sections 2, 4(d), 6.4(a), and table E–4.

Specifically, the Agency is finalizing the following: (1) A microscale near-road CO monitor inlet probe shall be between 2 and 7 meters above the ground; (2) a microscale CO monitor inlet probe in the near-road environment shall be placed so it has an unobstructed air flow, where no obstacles exist at or above the height of the monitor probe, between the monitor probe and the outside nearest edge of the traffic lanes of the target road segment; and (3) that CO monitors in the near-road environment shall have inlet probes as near as practicable to the outside nearest edge of the traffic lanes of the target road segment, but shall not be located at a distance greater than 50 meters in the horizontal from the outside nearest edge of the traffic lanes of the target road segment.

Further, as suggested through public comments, the EPA is retaining existing regulatory siting criteria language for microscale CO monitors in downtown areas or urban street canyon locations, where: (1) The inlet probe for a near-road microscale CO monitor in a downtown area or urban street canyon shall be between 2.5 meters and 3.5 meters above ground level; (2) the inlet probe for a near-road microscale CO monitor in a downtown area or urban street canyon shall be within 10 meters from the edge of the nearest traffic lane; and (3) near-road microscale CO monitors in street canyons are required to be at least 10 meters from an intersection.

Finally, the EPA recognizes that a monitoring network design may not always require monitoring on a national scale that is sufficient in fulfilling specific or otherwise unique data needs or monitoring objectives for every area across the nation. Thus, the EPA is finalizing the provision that EPA Regional Administrators have the authority to require monitoring above the minimum requirements, as necessary, in any area, to address situations where the minimally required monitoring network is not sufficient to meet monitoring objectives. Example situations where the Regional Administrator Authority could be utilized include, but are not limited to, those unmonitored locations where data or other information suggest that CO concentrations may be approaching or exceeding the NAAQS due to stationary CO sources, in downtown areas or urban street canyons, or in areas that are subject to high ground-level CO concentrations particularly due to or enhanced by topographical and meteorological impacts. In all cases in which a Regional Administrator may consider the need for additional monitoring, it is expected that the Regional Administrators will work with the state or local air agencies to evaluate evidence or needs to determine whether a particular area may warrant additional monitoring.

V. Statutory and Executive Order Reviews

A. Executive Order 12866: Regulatory Planning and Review and Executive Order 13563: Improving Regulation and Regulatory Review

Under Executive Order 12866 (58 FR 51735, October 4, 1993), this action is a ''significant regulatory action'' because it was deemed to ''raise novel legal or policy issues.'' Accordingly, EPA submitted this action to the Office of Management and Budget (OMB) for review under Executive Orders 12866 and 13563 (76 FR 3821, January 21, 2011) and any changes made in response to OMB recommendations have been documented in the docket for this action.

B. Paperwork Reduction Act

The information collection requirements in this final rule have been submitted for approval to the Office of Management and Budget (OMB) under the Paperwork Reduction Act, 44 U.S.C. 3501 *et seq.* The information collection requirements are not enforceable until OMB approves them. The Information Collection Request (ICR) document prepared by EPA for these revisions to part 58 has been assigned EPA ICR number 0940.24.

The information collected under 40 CFR part 53 (*e.g.,* test results, monitoring records, instruction manual, and other associated information) is needed to determine whether a candidate method intended for use in determining attainment of the NAAQS in 40 CFR part 50 will meet comparability requirements for designation as a FRM or FEM. We do not expect the number of FRM or FEM determinations to increase over the number that is currently used to estimate burden associated with CO FRM/FEM determinations provided in the current ICR for 40 CFR part 53 (EPA ICR numbers 0940.24). As such, no change in the burden estimate for 40 CFR part 53 has been made as part of this rulemaking.

The information collected and reported under 40 CFR part 58 is needed to determine compliance with the NAAQS, to characterize air quality and associated health impacts, to develop emissions control strategies, and to measure progress for the air pollution program. The amendments would revise the technical requirements for CO monitoring sites, require the relocation or siting of ambient CO air monitors, and the reporting of the collected ambient CO monitoring data to EPA's Air Quality System (AQS). The annual average reporting burden for the collection under 40 CFR part 58 (averaged over the first 3 years of this ICR) for a network of 311 CO monitors is $7,235,483. Burden is defined at 5 CFR 1320.3(b). State, local, and Tribal entities are eligible for State assistance grants provided by the Federal government under the CAA which can be used for monitors and related activities.

An agency may not conduct or sponsor, and a person is not required to respond to, a collection of information unless it displays a currently valid OMB control number. The OMB control numbers for EPA's regulations in 40 CFR are listed in 40 CFR part 9. When this ICR is approved by OMB, the Agency will publish a technical amendment to 40 CFR part 9 in the **Federal Register** to display the OMB control number for the approved information collection requirements contained in this final rule.

C. Regulatory Flexibility Act

The Regulatory Flexibility Act (RFA) generally requires an agency to prepare a regulatory flexibility analysis of any rule subject to notice and comment rulemaking requirements under the Administrative Procedure Act or any other statute unless the agency certifies that the rule will not have a significant economic impact on a substantial number of small entities. Small entities include small businesses, small organizations, and small governmental jurisdictions.

For purposes of assessing the impacts of today's rule on small entities, small entity is defined as: (1) A small business that is a small industrial entity as defined by the Small Business Administration's (SBA) regulations at 13 CFR 121.201; (2) a small governmental jurisdiction that is a government of a city, county, town, school district or special district with a population of less than 50,000; and (3) a small organization that is any not-for-profit enterprise which is independently owned and operated and is not dominant in its field.

After considering the economic impacts of this final rule on small entities, I certify that this action will not have a significant economic impact on a substantial number of small entities. This final rule will not impose any requirements on small entities. Rather, this rule retains existing national standards for allowable concentrations of CO in ambient air as required by section 109 of the CAA. See also *American Trucking Associations* v. *EPA.* 175 F. 3d at 1044–45 (NAAQS do not have significant impacts upon small entities because NAAQS themselves impose no regulations upon small entities). Similarly, the amendments to 40 CFR part 58 address the requirements for States to collect information and report compliance with the NAAQS and will not impose any requirements on small entities.

D. Unfunded Mandates Reform Act

This rule does not contain a Federal mandate that may result in expenditures of $100 million or more for State, local, and Tribal governments, in the aggregate, or the private sector in any one year. This rule retains the existing national ambient air quality standards for carbon monoxide. The expected costs associated with the monitoring requirements are described in EPA's ICR document, but those costs are expected to be well less than $100 million (adjusted for inflation) in the aggregate for any year. Furthermore, as indicated previously, in setting a NAAQS, EPA cannot consider the economic or technological feasibility of attaining ambient air quality standards. Thus, this rule is not subject to the requirements of sections 202 or 205 of the UMRA.

This rule is also not subject to the requirements of section 203 of the UMRA because it imposes no enforceable duty on any small governments.

E. Executive Order 13132: Federalism

This action does not have federalism implications. It will not have substantial direct effects on the States, on the relationship between the national government and the States, or on the distribution of power and responsibilities among the various levels of government, as specified in Executive Order 13132. The rule does not alter the relationship between the Federal government and the States regarding the establishment and implementation of air quality improvement programs as codified in the CAA. Under section 109 of the CAA, EPA is mandated to establish and review NAAQS; however, CAA section 116 preserves the rights of States to establish more stringent requirements if deemed necessary by a State. Furthermore, this rule does not impact CAA section 107 which establishes that the States have primary responsibility for implementation of the NAAQS. Finally, as noted in section D (above) on UMRA, this rule does not impose significant costs on State, local or Tribal governments or the private sector. Thus, Executive Order 13132 does not apply to this rule.

F. Executive Order 13175: Consultation and Coordination With Indian Tribal Governments

This action does not have Tribal implications, as specified in Executive Order 13175 (65 FR 67249, November 9, 2000). It does not have a substantial direct effect on one or more Indian Tribes, since Tribes are not obligated to adopt or implement any NAAQS. Thus, Executive Order 13175 does not apply to this action.

G. Executive Order 13045: Protection of Children From Environmental Health and Safety Risks

This action is not subject to EO 13045 (62 FR 19885, April 23, 1997) because it is not economically significant as defined in EO 12866, and because the Agency does not believe the environmental health or safety risks addressed by this action present a disproportionate risk to children. This action's health and risk assessments are described in section II.A.

H. Executive Order 13211: Actions That Significantly Affect Energy Supply, Distribution or Use

This action is not a ''significant energy action'' as defined in Executive Order 13211 (66 FR 28355 (May 22, 2001)) because it is not likely to have a significant adverse effect on the supply, distribution, or use of energy. The rule concerns the review of the NAAQS for CO. The rule does not prescribe specific pollution control strategies by which these ambient standards will be met. Such strategies are developed by States on a case-by-case basis, and EPA cannot predict whether the control options selected by States will include regulations on energy suppliers, distributors, or users.

I. National Technology Transfer and Advancement Act

Section 12(d) of the National Technology Transfer and Advancement Act of 1995 (NTTAA), Public Law 104–113, section 12(d) (15 U.S.C. 272 note) directs EPA to use voluntary consensus standards in its regulatory activities unless to do so would be inconsistent with applicable law or otherwise impractical. Voluntary consensus standards are technical standards (*e.g.,* materials specifications, test methods, sampling procedures, and business practices) that are developed or adopted by voluntary consensus standards bodies. The NTTAA directs EPA to provide Congress, through OMB, explanations when the Agency decides not to use available and applicable voluntary consensus standards.

This rulemaking involves technical standards with regard to ambient monitoring of CO. We have not identified any potentially applicable voluntary consensus standards that would adequately characterize ambient CO concentrations for the purposes of determining compliance with the CO NAAQS and none have been brought to our attention in comments. Therefore, EPA has decided to use the method ''Measurement Principle and Calibration Procedure for the Measurement of Carbon Monoxide in the Atmosphere (Non-Dispersive Infrared Photometry)'' (40 CFR part 50, appendix C), as revised by this action, for the purposes of ambient monitoring of CO concentrations.

J. Executive Order 12898: Federal Actions To Address Environmental Justice in Minority Populations and Low-Income Populations

Executive Order 12898 (59 FR 7629 (Feb. 16, 1994)) establishes Federal executive policy on environmental justice. Its main provision directs Federal agencies, to the greatest extent practicable and permitted by law, to make environmental justice part of their mission by identifying and addressing, as appropriate, disproportionately high and adverse human health or environmental effects of their programs, policies, and activities on minority populations and low-income populations in the United States.

EPA has determined that this final rule will not have disproportionately high and adverse human health or environmental effects on minority or low-income populations because it does not affect the level of protection provided to human health or the environment. The action in this notice is to retain without revision the existing NAAQS for CO. Therefore this action will not cause increases in source emissions or air concentrations.

K. Congressional Review Act

The Congressional Review Act, 5 U.S.C. 801 *et seq.,* as added by the Small Business Regulatory Enforcement Fairness Act of 1996, generally provides that before a rule may take effect, the agency promulgating the rule must submit a rule report, which includes a copy of the rule, to each House of the Congress and to the Comptroller General of the United States. EPA will submit a report containing this rule and other required information to the U.S. Senate, the U.S. House of Representatives, and the Comptroller General of the United States prior to publication of the rule in the **Federal Register**. A major rule cannot take effect until 60 days after it is published in the **Federal Register**. This action is not a ''major rule'' as defined by 5 U.S.C. 804(2). This rule will be effective October 31, 2011.

References

Adams K.F.; Koch G.; Chatterjee B.; Goldstein G.M.; O'Neil J.J.; Bromberg P.A.; Sheps D.S.; McAllister S.; Price C.J.; Bissette J. (1988) Acute elevation of blood carboxyhemoglobin to 6% impairs exercise performance and aggravates symptoms in patients with ischemic heart disease. J. Am. Coll. Cardiol. 12:900–909.

Allred E.N.; Bleecker E.R.; Chaitman B.R.; Dahms T.E.; Gottlieb S.O.; Hackney J.D.; Pagano M.; Selvester R.H.; Walden S.M.; Warren J. (1989a) Short-term effects of carbon monoxide exposure on the exercise performance of subjects with coronary artery disease. N. Engl. J. Med. 321:1426–1432.

Allred E.N.; Bleecker,E.R.; Chaitman B.R.; Dahms T.E.; Gottlieb S.O.; Hackney J.D.; Hayes D.; Pagano M.; Selvester R.H.; Walden S.M.; Warren J. (1989b) Acute effects of carbon monoxide exposure on individuals with coronary artery disease. Cambridge, MA: Health Effects Institute; research report no. 25.

Allred E.N.; Bleecker E.R.; Chaitman B.R.; Dahms T.E.; Gottlieb S.O.; Hackney J.D.; Pagano M.; Selvester R.H.; Walden S.M.; Warren J. (1991) Effects of carbon monoxide on myocardial ischemia. Environ. Health Perspect. 91:89–132.

AHA. (2003) Heart and Stroke Facts. American Heart Association, Dallas, TX. Available at: *http://www.americanheart.org/downloadable/heart/1056719919740HSFacts2003text.pdf.*

Anderson E.W.; Andelman R.J.; Strauch J.M.; Fortuin N.J. and Knelson, J.H. (1973) Effect of low level carbon monoxide exposure on onset and duration of angina pectoris. Annals of Internal Medicine 79:46–50.

Baldauf R.; Thoma E.; Hays M.; Shores R.; Kinsey J.; Gullett B.; Kimbrough S.; Isakov V.; Long T.; Snow R.; Khlystov A.; Weinstein J.; Chen F.L.; Seila R.; Olson D.; Gilmour I.; Cho S.H.; Watkins N.; Rowley P.; Bang J. (2008a). Traffic and meteorological impacts on near-road air quality: Summary of methods and trends from the Raleigh near-road study. J Air Waste Manag Assoc, 58:865–878. 190239

Baldauf R.; Thoma E.; Khlystov A.; Isakov V.; Bowker G.; Long T.; Snow R. (2008b). Impacts of noise barriers on near-road air quality. Atmos Environ, 42:7502–7507.

Bell M.L.; Peng R.D.; Dominici F.; Samet J.M. (2009) Emergency admissions for cardiovascular disease and ambient levels of carbon monoxide: Results for 126 U.S. urban counties, 1999–2005. Circulation, 120:949–955.

Bissette J.; Carr G.; Koch G.G.; Adams K.F.; Sheps D.S. (1986) Analysis of (events/time at risk) ratios from two period crossover studies. In: American Statistical Association 1986 proceedings of the Biopharmaceutical Section; August; Chicago, IL., Washington, DC:

American Statistical Asssociation; pp. 104–108.

Brain, J.D. (2009) Letter from Dr. J.D. Brain to Administrator Lisa Jackson. Re: Consultation on EPA's Carbon Monoxide National Ambient Air Quality Standards: Scope and Methods Plan for Health Risk and Exposure Assessment. CASAC–09–012. July 14, 2009.

Brain J. and Samet J. (2009) Letter from Drs. J.D. Brain and J.M. Samet to Administrator Lisa Jackson. Re: Review of EPA's Integrated Science Assessment for Carbon Monoxide (First External Review Draft) EPA–CASAC–09–011. June 24, 2009.

Brain, J.D. and Samet, J.M. (2010a) Letter from Drs. J.D. Brain and J.M. Samet to Administrator Lisa Jackson. Re: Review of the Risk and Exposure Assessment to Support the Review of the Carbon Monoxide (CO) Primary National Ambient Air Quality Standards: First External Review Draft. EPA–CASAC–10–006. February 12, 2010.

Brain J.D. and Samet J.M. (2010b) Letter from Drs. J.D. Brain and J.M. Samet to Administrator Lisa Jackson. Re: Review of the Risk and Exposure Assessment to Support the Review of the Carbon Monoxide (CO) Primary National Ambient Air Quality Standards: Second External Review Draft. EPA–CASAC–10–012. May 19, 2010.

Brain J.D. and Samet J.M. (2010c) Letter from Drs. J.D. Brain and J.M. Samet to Administrator Lisa Jackson. Re: Review of the Policy Assessment for the Review of the Carbon Monoxide National Ambient Air Quality Standards (NAAQS): External Review Draft. EPA–CASAC–10–013. June 8, 2010.

Brain J.D. and Samet J.M. (2010d) Letter from Drs. J.D. Brain and J.M. Samet to Administrator Lisa Jackson. Re: Review of Integrated Science Assessment for Carbon Monoxide (Second External Review Draft). EPA–CASAC–10–005. January 20, 2010.

Henderson R. (2008) Letter from Dr. Rogene Henderson, Chairman, Clean Air Scientific Advisory Committee, to Administrator Stephen Johnson. Re: Consultation on EPA's Draft Plan for Review of the Primary NAAQS for Carbon Monoxide CASAC–08–013. June 12, 2008.

Johnson T.; Capel J.; Paul R.; Wijnberg L. (1992) Estimation of Carbon Monoxide Exposure and associated Carboxyhemoglobin levels in Denver Residents Using a Probabalistic verion of NEM, prepared by International Technology for U.S. EPA, Office of Air Quality Planning and Standards, Durham, NC, Contract No. 68–D0–0062.

Johnson T.; Mihlan G.; LaPointe J.; Fletcher K.; Capel J. (2000) Estimation of Carbon Monoxide Exposures and Associated Carboxyhemoglobin Levels for Residents of Denver and Los Angeles Using pNEM/CO (Version 2.1). Report prepared by ICF Consulting and TRJ Environmental, Inc., under EPA Contract No. 68–D6–0064. U.S. Environmental Protection Agency, Research Triangle Park, North Carolina. Available at: *http://www.epa.gov/ttn/fera/human_related.html.* June 2000.

Kleinman M.T.; Davidson D.M.; Vandagriff R.B.; Caiozzo V.J.; Whittenberger J.L. (1989) Effects of short-term exposure to carbon monoxide in subjects with coronary artery disease. Arch. Environ. Health 44:361–369.

Kleinman M.T.; Leaf D.A.; Kelly E.; Caiozzo V.; Osann K.; O'Niell T. (1998) Urban angina in the mountains: effects of carbon monoxide and mild hypoxemia on subjects with chronic stable angina. Arch. Environ. Health 53:388–397.

Koken P.J.M.; Piver W.T.; Ye F.; Elixhauser A.; Olsen L.M.; Portier C.J. (2003) Temperature, air pollution, and hospitalization for cardiovascular diseases among elderly people in Denver. Environ Health Perspect, 111:1312–1317.

Lippmann, M. (1984) CASAC Findings and Recommendations on the Scientific Basis for a Revised NAAQS for Carbon Monoxide. [Letter to W.D. Ruckelshous, EPA Administrator]. May 17.

Linn W.S.; Szlachcic Y.; Gong H. Jr; Kinney P.L.; Berhane K.T. (2000) Air pollution and daily hospital admissions in metropolitan Los Angeles. Environ Health Perspect, 108:427–434.

Mann J.K.; Tager I.B.; Lurmann F.; Segal M.; Quesenberry C.P. Jr; Lugg M.M.; Shan J.; Van den Eeden S.K. (2002) Air pollution and hospital admissions for ischemic heart disease in persons with congestive heart failure or arrhythmia. Environ Health Perspect, 110:1247–1252.

Metzger K.B.; Tolbert P.E.; Klein M.; Peel J.L.; Flanders W.D.; Todd K.H.; Mulholland J.A.; Ryan P.B.; Frumkin H. (2004) Ambient air pollution and cardiovascular emergency department visits. Epidemiology, 15:46–56.

National Research Council. (2003) Managing Carbon Monoxide Pollution in Meteorological and Topographical Problem Areas. The National Academies Press, Washington, DC.

Sheps D.S.; Adams K.F. Jr.; Bromberg P.A.; Goldstein G.M.; O'Neil J.J.; Horstman D.; Koch G. (1987) Lack of effect of low levels of carboxyhemoglobin on cardiovascular function in patients with ischemic heart disease. Arch. Environ. Health 42:108–116.

Symons J.M.; Wang L.; Guallar E.; Howell E.; Dominici F.; Schwab M.; Ange B.A.; Samet J.; Ondov J.; Harrison D.; Geyh A. (2006) A case-crossover study of fine particulate matter air pollution and onset of congestive heart failure symptom exacerbation leading to hospitalization. Am J Epidemiol, 164:421–433.

Tolbert P.E.; Klein M.; Peel J.L.; Sarnat S.E.; Sarnat J.A. (2007) Multipollutant modeling issues in a study of ambient air quality and emergency department visits in Atlanta. J Expo Sci Environ Epidemiol, 17:S29–S35.

U.S. Environmental Protection Agency. (1979a) Air Quality Criteria for Carbon Monoxide. Office of Health and Environmental Assessment, Environmental Criteria and Assessment Office, Research Triangle Park, NC. EPA–600/8–79–022.

U.S. Environmental Protection Agency. (1979b) Assessment of Adverse Health Effects from Carbon Monoxide and Implications for Possible Modifications of the Standard. Office of Air Quality Planning and Standards, Research Triangle Park, NC.

U.S. Environmental Protection Agency. (1984a) Revised Evaluation of Health Effects Associated with Carbon Monoxide Exposure: An Addendum to the 1979 EPA Air Quality Criteria Document for Carbon Monoxide. Office of Health and Environmental Assessment, Environmental Criteria and Assessment Office, Research Triangle Park, NC. EPA–600/8–83–033F.

U.S. Environmental Protection Agency. (1984b) Review of the NAAQS for Carbon Monoxide: Reassessment of Scientific and Technical Information. Office of Air Quality Planning and Standards, Research Triangle Park. NC. EPA–450/584–904.

U.S. Environmental Protection Agency. (1991) Air Quality Criteria for Carbon Monoxide. Office of Health and Environmental Assessment, Environmental Criteria and Assessment Office, Research Triangle Park, NC. EPA/600/8–90/045F. Available at: *http://www.epa.gov/ttn/naaqs/standards/co/s_co_pr.html.*

U.S. Environmental Protection Agency. (1992) Review of the National Ambient Air Quality Standards for Carbon Monoxide: Assessment of Scientific and Technical Information, OAQPS Staff Paper. Office of Air Quality Planning and Standards, Research Triangle Park, NC. EPA/452/R–92–004.

U.S. Environmental Protection Agency. (2000) Air Quality Criteria for Carbon Monoxide. National Center for Environmental Assessment, Office of Research and Development, Research Triangle Park, NC. EPA/600/P–99/001F. Available at: *http://cfpub.epa.gov/ncea/cfm/recordisplay.cfm?deid=18163.*

U.S. Environmental Protection Agency. (2008a) Draft Plan for Review of the National Ambient Air Quality Standards for Carbon Monoxide. Also known as Draft Integrated Review Plan. National Center for Environmental Assessment and Office of Air Quality Planning and Standards, Research Triangle Park, NC. EPA–452/D–08–001. Available at: *http://www.epa.gov/ttn/naaqs/standards/co/s_co_cr_pd.html.*

U.S. Environmental Protection Agency. (2008b) Plan for Review of the National Ambient Air Quality Standards for Carbon Monoxide. *Also known as Integrated Review Plan.* National Center for Environmental Assessment and Office of Air Quality Planning and Standards, Research Triangle Park, NC. EPA–452/R–08–005. Available at: *http://www.epa.gov/ttn/naaqs/standards/co/s_co_cr_pd.html.*

U.S. Environmental Protection Agency. (2009a) Integrated Science Assessment for Carbon Monoxide, First External Review Draft. National Center for Environmental Assessment, Research

Triangle Park, NC. EPA/600/R–00/019. Available at: *http://www.epa.gov/ttn/naaqs/standards/co/s_co_cr_isa.html.*

U.S. Environmental Protection Agency. (2009b) Integrated Science Assessment for Carbon Monoxide, Second External Review Draft. National Center for Environmental Assessment, Research Triangle Park, NC. EPA/600/R–09/019B. Available at: *http://www.epa.gov/ttn/naaqs/standards/co/s_co_cr_isa.html.*

U.S. Environmental Protection Agency. (2009c) Carbon Monoxide National Ambient Air Quality Standards: Scope and Methods Plan for Health Risk and Exposure Assessment. Draft. Office of Air Quality Planning and Standards, Research Triangle Park, NC. EPA–452/R–09–004. Available at: *http://www.epa.gov/ttn/naaqs/standards/co/s_co_cr_pd.html.*

U.S. Environmental Protection Agency. (2009d) Risk and Exposure Assessment to Support the Review of the Carbon Monoxide Primary National Ambient Air Quality Standards, First External Review Draft. Office of Air Quality Planning and Standards, Research Triangle Park, NC. EPA–452/P–09–008. Available at: *http://www.epa.gov/ttn/naaqs/standards/co/s_co_cr_rea.html.*

U.S. Environmental Protection Agency. (2010a) Integrated Science Assessment for Carbon Monoxide. National Center for Environmental Assessment, Research Triangle Park, NC. EPA/600/R–09/019F. Available at: *http://www.epa.gov/ttn/naaqs/standards/co/s_co_cr_isa.html.*

U.S. Environmental Protection Agency. (2010b) Quantitative Risk and Exposure Assessment for Carbon Monoxide—Amended. Office of Air Quality Planning and Standards, Research Triangle Park, NC. EPA–452/R–10–009. Available at: *http://www.epa.gov/ttn/naaqs/standards/co/s_co_cr_rea.html.*

U.S. Environmental Protection Agency. (2010c) Policy Assessment for the Review of the Carbon Monoxide National Ambient Air Quality Standards. Office of Air Quality Planning and Standards, Research Triangle Park, NC. EPA 452/R–10–007. Available at: *http://www.epa.gov/ttn/naaqs/standards/co/s_co_cr_pa.html.*

U.S. Environmental Protection Agency. (2010d) Risk and Exposure Assessment to Support the Review of the Carbon Monoxide Primary National Ambient Air Quality Standards, Second External Review Draft, U.S Environmental Protection Agency, Research Triangle Park, NC, report no. EPA–452/P–10–004. Available at: *http://www.epa.gov/ttn/naaqs/standards/co/s_co_cr_rea.html.*

U.S. Environmental Protection Agency. (2010e) Policy Assessment for the Review of the Carbon Monoxide National Ambient Air Quality Standards, External Review Draft. Office of Air Quality Planning and Standards, Research Triangle Park, NC. EPA–452/P–10–005. Available at: *http://www.epa.gov/ttn/naaqs/standards/co/s_co_cr_pa.html.*

Watkins N. and Thompson R. (2010) CO Monitoring Network Background and Review. Memorandum to the Carbon Monoxide NAAQS Review Docket. EPA–HQ–OAR–2008–0015.

Wellenius G.A.; Bateson T.F.; Mittleman M.A.; Schwartz J. (2005) Particulate air pollution and the rate of hospitalization for congestive heart failure among medicare beneficiaries in Pittsburgh, Pennsylvania. Am J Epidemiol 161:1030–1036.

Zhu Y.; Hinds W.C.; Kim S.; Shen S.; Sioutas C. (2002) Study of ultrafine particles near a major highway with heavy-duty diesel traffic. Atmos Environ, 36:4323–4335.

List of Subjects

40 CFR Part 50

Environmental protection, Air pollution control, Carbon monoxide, Lead, Nitrogen dioxide, Ozone, Particulate matter, Sulfur oxides.

40 CFR Part 53

Environmental protection, Administrative practice and procedure, Air pollution control, Intergovernmental relations, Reporting and recordkeeping requirements.

40 CFR Part 58

Environmental protection, Administrative practice and procedure, Air pollution control, Intergovernmental relations, Reporting and recordkeeping requirements.

Dated: August 12, 2011.

Lisa P. Jackson,

Administrator.

For the reasons stated in the preamble, title 40, chapter I of the Code of Federal Regulations is amended as follows:

PART 50—NATIONAL PRIMARY AND SECONDARY AMBIENT AIR QUALITY STANDARDS

■ 1. The authority citation for part 50 continues to read as follows:

Authority: 42 U.S.C. 7401, *et seq.*

■ 2. Appendix C to part 50 is revised to read as follows:

Appendix C to Part 50—Measurement Principle and Calibration Procedure for the Measurement of Carbon Monoxide in the Atmosphere (Non-Dispersive Infrared Photometry)

1.0 Applicability

1.1 This non-dispersive infrared photometry (NDIR) Federal Reference Method (FRM) provides measurements of the concentration of carbon monoxide (CO) in ambient air for determining compliance with the primary and secondary National Ambient Air Quality Standards (NAAQS) for CO as specified in § 50.8 of this chapter. The method is applicable to continuous sampling and measurement of ambient CO concentrations suitable for determining 1-hour or longer average measurements. The method may also provide measurements of shorter averaging times, subject to specific analyzer performance limitations. Additional CO monitoring quality assurance procedures and guidance are provided in part 58, appendix A, of this chapter and in reference 1 of this appendix C.

2.0 Measurement Principle

2.1 Measurements of CO in ambient air are based on automated measurement of the absorption of infrared radiation by CO in an ambient air sample drawn into an analyzer employing non-wavelength-dispersive, infrared photometry (NDIR method). Infrared energy from a source in the photometer is passed through a cell containing the air sample to be analyzed, and the quantitative absorption of energy by CO in the sample cell is measured by a suitable detector. The photometer is sensitized specifically to CO by employing CO gas in a filter cell in the optical path, which, when compared to a differential optical path without a CO filter cell, limits the measured absorption to one or more of the characteristic wavelengths at which CO strongly absorbs. However, to meet measurement performance requirements, various optical filters, reference cells, rotating gas filter cells, dual-beam configurations, moisture traps, or other means may also be used to further enhance sensitivity and stability of the photometer and to minimize potential measurement interference from water vapor, carbon dioxide (CO_2), or other species. Also, various schemes may be used to provide a suitable zero reference for the photometer, and optional automatic compensation may be provided for the actual pressure and temperature of the air sample in the measurement cell. The measured infrared absorption, converted to a digital reading or an electrical output signal, indicates the measured CO concentration.

2.2 The measurement system is calibrated by referencing the analyzer's CO measurements to CO concentration standards traceable to a National Institute of Standards and Technology (NIST) primary standard for CO, as described in the associated calibration procedure specified in section 4 of this reference method.

2.3 An analyzer implementing this measurement principle will be considered a reference method only if it has been designated as a reference method in accordance with part 53 of this chapter.

2.4 Sampling *considerations.* The use of a particle filter in the sample inlet line of a CO FRM analyzer is optional and left to the discretion of the user unless such a filter is specified or recommended by the analyzer manufacturer in the analyzer's associated operation or instruction manual.

3.0 Interferences

3.1 The NDIR measurement principle is potentially susceptible to interference from water vapor and CO_2, which have some infrared absorption at wavelengths in common with CO and normally exist in the atmosphere. Various instrumental techniques can be used to effectively minimize these interferences.

4.0 Calibration Procedures

4.1 *Principle.* Either of two methods may be selected for dynamic multipoint calibration of FRM CO analyzers, using test gases of accurately known CO concentrations obtained from one or more compressed gas cylinders certified as CO transfer standards:

4.1.1 Dilution *method:* A single certified standard cylinder of CO is quantitatively diluted as necessary with zero air to obtain the various calibration concentration standards needed.

4.1.2 Multiple-*cylinder method:* Multiple, individually certified standard cylinders of CO are used for each of the various calibration concentration standards needed.

4.1.3 Additional information on calibration may be found in Section 12 of reference 1.

4.2 Apparatus. The major components and typical configurations of the calibration systems for the two calibration methods are shown in Figures 1 and 2. Either system may be made up using common laboratory components, or it may be a commercially manufactured system. In either case, the principal components are as follows:

4.2.1 CO standard gas flow control and measurement devices (or a combined device) capable of regulating and maintaining the standard gas flow rate constant to within ±2 percent and measuring the gas flow rate accurate to within ±2 percent, properly calibrated to a NIST-traceable standard.

4.2.2 For the dilution method (Figure 1), dilution air flow control and measurement devices (or a combined device) capable of regulating and maintaining the air flow rate constant to within ±2 percent and measuring the air flow rate accurate to within ±2 percent, properly calibrated to a NIST-traceable standard.

4.2.3 Standard gas pressure regulator(s) for the standard CO cylinder(s), suitable for use with a high-pressure CO gas cylinder and having a non-reactive diaphragm and internal parts and a suitable delivery pressure.

4.2.4 Mixing chamber for the dilution method of an inert material and of proper design to provide thorough mixing of CO standard gas and diluent air streams.

4.2.5 Output sampling manifold, constructed of an inert material and of sufficient diameter to ensure an insignificant pressure drop at the analyzer connection. The system must have a vent designed to ensure nearly atmospheric pressure at the analyzer connection port and to prevent ambient air from entering the manifold.

4.3 Reagents

4.3.1 CO gas concentration transfer standard(s) of CO in air, containing an appropriate concentration of CO suitable for the selected operating range of the analyzer under calibration and traceable to a NIST standard reference material (SRM). If the CO analyzer has significant sensitivity to CO_2, the CO standard(s) should also contain 350 to 400 ppm CO_2 to replicate the typical CO_2 concentration in ambient air. However, if the zero air dilution ratio used for the dilution method is not less than 100:1 and the zero air contains ambient levels of CO_2, then the CO standard may be contained in nitrogen and need not contain CO_2.

4.3.2 For the dilution method, clean zero air, free of contaminants that could cause a detectable response on or a change in sensitivity of the CO analyzer. The zero air should contain < 0.1 ppm CO.

4.4 Procedure *Using the Dilution Method*

4.4.1 Assemble or obtain a suitable dynamic dilution calibration system such as the one shown schematically in Figure 1. Generally, all calibration gases including zero air must be introduced into the sample inlet of the analyzer. However, if the analyzer has special, approved zero and span inlets and automatic valves to specifically allow introduction of calibration standards at near atmospheric pressure, such inlets may be used for calibration in lieu of the sample inlet. For specific operating instructions, refer to the manufacturer's manual.

4.4.2 Ensure that there are no leaks in the calibration system and that all flowmeters are properly and accurately calibrated, under the conditions of use, if appropriate, against a reliable volume or flow rate standard such as a soap-bubble meter or wet-test meter traceable to a NIST standard. All volumetric flow rates should be corrected to the same temperature and pressure such as 298.15 K (25 °C) and 760 mm Hg (101 kPa), using a correction formula such as the following:

$$F_c = F_m \frac{298.15 \times P_m}{760(T_m + 273.15)} \quad (1)$$

Where:

F_c = corrected flow rate (L/min at 25 °C and 760 mm Hg),

F_m = measured flow rate (at temperature T_m and pressure P_m),

P_m = measured pressure in mm Hg (absolute), and

T_m = measured temperature in degrees Celsius.

4.4.3 Select the operating range of the CO analyzer to be calibrated. Connect the measurement signal output of the analyzer to an appropriate readout instrument to allow the analyzer's measurement output to be continuously monitored during the calibration. Where possible, this readout instrument should be the same one used to record routine monitoring data, or, at least, an instrument that is as closely representative of that system as feasible.

4.4.4 Connect the inlet of the CO analyzer to the output-sampling manifold of the calibration system.

4.4.5 Adjust the calibration system to deliver zero air to the output manifold. The total air flow must exceed the total demand of the analyzer(s) connected to the output manifold to ensure that no ambient air is pulled into the manifold vent. Allow the analyzer to sample zero air until a stable response is obtained. After the response has stabilized, adjust the analyzer zero reading.

4.4.6 Adjust the zero air flow rate and the CO gas flow rate from the standard CO cylinder to provide a diluted CO concentration of approximately 80 percent of the measurement upper range limit (URL) of the operating range of the analyzer. The total air flow rate must exceed the total demand of the analyzer(s) connected to the output manifold to ensure that no ambient air is pulled into the manifold vent. The exact CO concentration is calculated from:

$$[CO]_{OUT} = \frac{[CO]_{STD} \times F_{CO}}{F_D + F_{CO}} \quad (2)$$

Where:

$[CO]_{OUT}$ = diluted CO concentration at the output manifold (ppm),

$[CO]_{STD}$ = concentration of the undiluted CO standard (ppm),

F_{CO} = flow rate of the CO standard (L/min), and

F_D = flow rate of the dilution air (L/min).

Sample this CO concentration until a stable response is obtained. Adjust the analyzer span control to obtain the desired analyzer response reading equivalent to the calculated standard concentration. If substantial adjustment of the analyzer span control is required, it may be necessary to recheck the zero and span adjustments by repeating steps 4.4.5 and 4.4.6. Record the CO concentration and the analyzer's final response.

4.4.7 Generate several additional concentrations (at least three evenly spaced points across the remaining scale are suggested to verify linearity) by decreasing F_{CO} or increasing F_D. Be sure the total flow exceeds the analyzer's total flow demand. For each concentration generated, calculate the exact CO concentration using equation (2). Record the concentration and the analyzer's stable response for each concentration. Plot the analyzer responses (vertical or y-axis) versus the corresponding CO concentrations (horizontal or x-axis). Calculate the linear regression slope and intercept of the calibration curve and verify that no point deviates from this line by more than 2 percent of the highest concentration tested.

4.5 Procedure *Using the Multiple-Cylinder Method.* Use the procedure for the dilution method with the following changes:

4.5.1 Use a multi-cylinder, dynamic calibration system such as the typical one shown in Figure 2.

4.5.2 The flowmeter need not be accurately calibrated, provided the flow in the output manifold can be verified to exceed the analyzer's flow demand.

4.5.3 The various CO calibration concentrations required in Steps 4.4.5, 4.4.6, and 4.4.7 are obtained without dilution by selecting zero air or the appropriate certified standard cylinder.

4.6 Frequency *of Calibration.* The frequency of calibration, as well as the number of points necessary to establish the calibration curve and the frequency of other performance checking, will vary by analyzer. However, the minimum frequency, acceptance criteria, and subsequent actions are specified in reference 1, appendix D, ''Measurement Quality Objectives and Validation Template for CO'' (page 5 of 30). The user's quality control program should provide guidelines for initial establishment of these variables and for subsequent alteration as operational experience is accumulated. Manufacturers of CO analyzers should include in their instruction/operation manuals information and guidance as to these variables and on other matters of operation, calibration, routine maintenance, and quality control.

5.0 Reference

1. *QA Handbook for Air Pollution Measurement Systems—Volume II. Ambient Air Quality Monitoring Program.* U.S. EPA. EPA–454/B–08–003 (2008).

BILLING CODE 6560–50–P

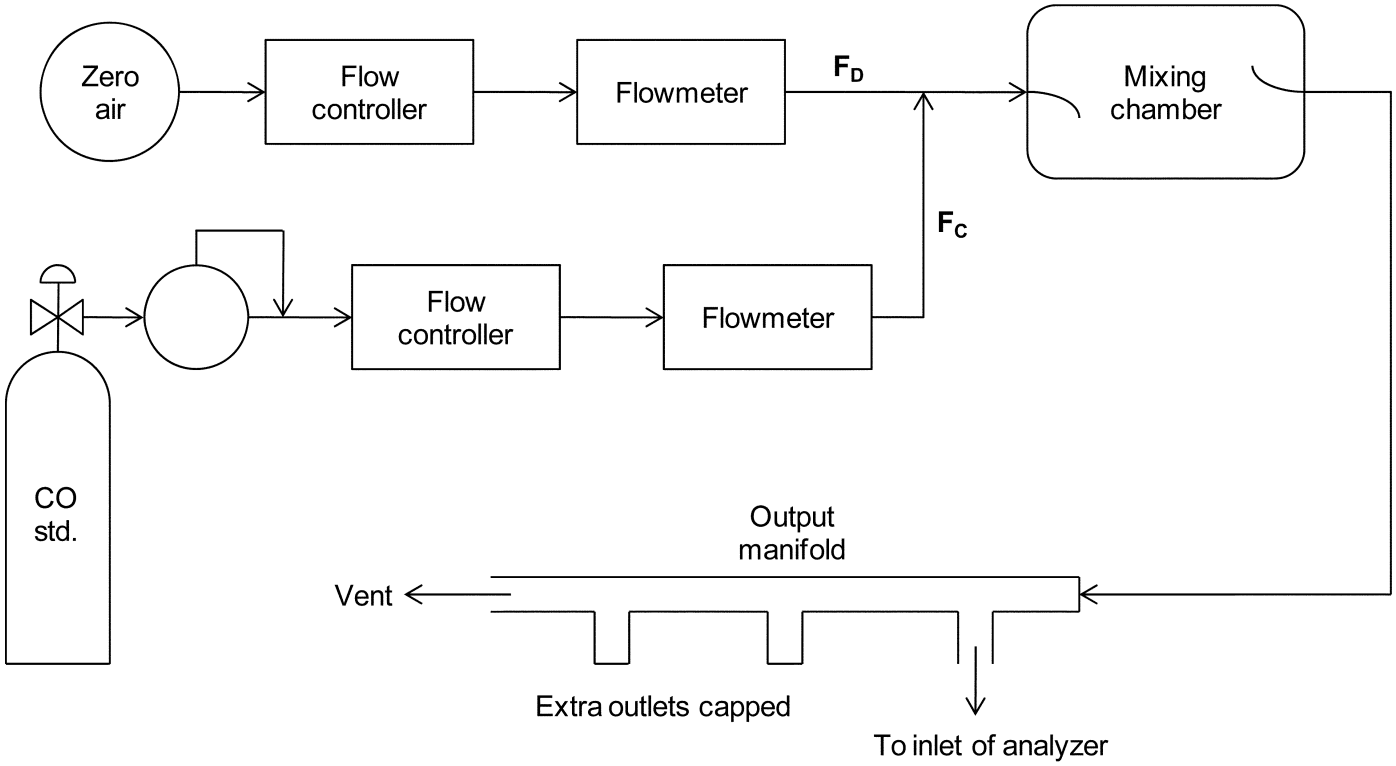

Figure 1. Dilution method for calibration of CO analyzers.

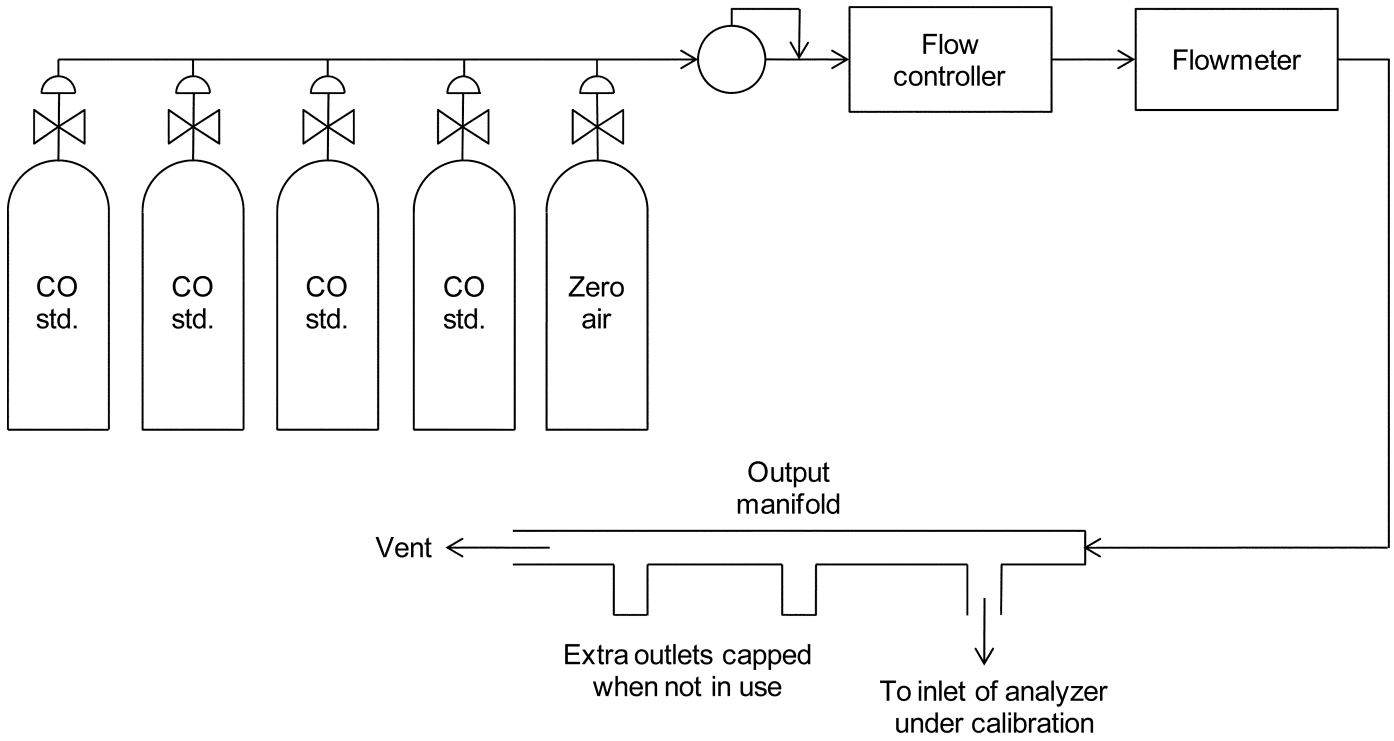

Figure 2. Multiple cylinder method for calibration of CO analyzers.

BILLING CODE 6560–50–C

PART 53—AMBIENT AIR QUALITY REFERENCE AND EQUIVALENT METHODS

■ 3. The authority citation for part 53 continues to read as follows:

Authority: 42 U.S.C. 7401, *et seq.*

■ 4. Subpart B of part 53 is revised to read as follows:

Subpart B—Procedures for Testing Performance Characteristics of Automated Methods for SO_2, CO, O_3, and NO_2

Sec.
53.20 General provisions.
53.21 Test conditions.
53.22 Generation of test atmospheres.
53.23 Test procedure.
Figure B–1 to Subpart B of Part 53—Example
Table B–1 to Subpart B of Part 53—Performance Limit Specifications for Automated Methods
Table B–2 to Subpart B of Part 53—Test Atmospheres
Table B–3 to Subpart B of Part 53—Interferent Test Concentration, 1 Parts Per Million
Table B–4 to Subpart B of Part 53— Line Voltage and Room Temperature Test Conditions
Table B–5 to Subpart B of Part 53—Symbols and Abbreviations
Appendix A to Subpart B—Optional Forms for Reporting Test Results

Subpart B—Procedures for Testing Performance Characteristics of Automated Methods for SO_2, CO, O_3, and NO_2

§ 53.20 General provisions.

(a) The test procedures given in this subpart shall be used to test the performance of candidate automated methods against the performance requirement specifications given in table B–1 to subpart B of part 53. A test analyzer representative of the candidate automated method must exhibit performance better than, or not outside, the specified limit or limits for each such performance parameter specified (except range) to satisfy the requirements of this subpart. Except as provided in paragraph (b) of this section, the measurement range of the candidate method must be the standard range specified in table B–1 to subpart B of part 53 to satisfy the requirements of this subpart.

(b) *Measurement ranges.* For a candidate method having more than one selectable measurement range, one range must be the standard range specified in table B–1 to subpart B of part 53, and a test analyzer representative of the method must pass the tests required by this subpart while operated in that range.

(i) *Higher ranges.* The tests may be repeated for one or more higher (broader) ranges (*i.e.,* ranges extending to higher concentrations) than the standard range specified in table B–1 to subpart B of part 53, provided that the range does not extend to concentrations more than four times the upper range limit of the standard range specified in table B–1 to subpart B of part 53. For such higher ranges, only the tests for range (calibration), noise at 80% of the upper range limit, and lag, rise and fall time are required to be repeated. For the purpose of testing a higher range, the test procedure of § 53.23(e) may be abridged to include only those components needed to test lag, rise and fall time.

(ii) *Lower ranges.* The tests may be repeated for one or more lower (narrower) ranges (*i.e.,* ones extending to lower concentrations) than the standard range specified in table B–1 to subpart B of part 53. For methods for some pollutants, table B–1 to subpart B of part 53 specifies special performance limit requirements for lower ranges. If special low-range performance limit requirements are not specified in table B–1 to subpart B of part 53, then the performance limit requirements for the standard range apply. For lower ranges for any method, only the tests for range (calibration), noise at 0% of the

measurement range, lower detectable limit, (and nitric oxide interference for SO_2 UVF methods) are required to be repeated, provided the tests for the standard range shows the applicable limit specifications are met for the other test parameters.

(iii) If the tests are conducted and passed only for the specified standard range, any FRM or FEM determination with respect to the method will be limited to that range. If the tests are passed for both the specified range and one or more higher or lower ranges, any such determination will include the additional higher or lower range(s) as well as the specified standard range. Appropriate test data shall be submitted for each range sought to be included in a FRM or FEM method determination under this paragraph (b).

(c) For each performance parameter (except range), the test procedure shall be initially repeated seven (7) times to yield 7 test results. Each result shall be compared with the corresponding performance limit specification in table B–1 to subpart B of part 53; a value higher than or outside the specified limit or limits constitutes a failure. These 7 results for each parameter shall be interpreted as follows:

(1) Zero (0) failures: The candidate method passes the test for the performance parameter.

(2) Three (3) or more failures: The candidate method fails the test for the performance parameter.

(3) One (1) or two (2) failures: Repeat the test procedures for the performance parameter eight (8) additional times yielding a total of fifteen (15) test results. The combined total of 15 test results shall then be interpreted as follows:

(i) One (1) or two (2) failures: The candidate method passes the test for the performance parameter.

(ii) Three (3) or more failures: The candidate method fails the test for the performance parameter.

(d) The tests for *zero drift, span drift, lag time, rise time, fall time,* and *precision* shall be carried out in a single integrated procedure conducted at various line voltages and ambient temperatures specified in § 53.23(e). A temperature-controlled environmental test chamber large enough to contain the test analyzer is recommended for this test. The tests for *noise, lower detectable limit,* and *interference equivalent* shall be conducted at any ambient temperature between 20 °C and 30 °C, at any normal line voltage between 105 and 125 volts, and shall be conducted such that not more than three (3) test results for each parameter are obtained in any 24-hour period.

(e) If necessary, all measurement response readings to be recorded shall be converted to concentration units or adjusted according to the calibration curve constructed in accordance with § 53.21(b).

(f) All recorder chart tracings (or equivalent data plots), records, test data and other documentation obtained from or pertinent to these tests shall be identified, dated, signed by the analyst performing the test, and submitted.

Note to § 53.20: Suggested formats for reporting the test results and calculations are provided in Figures B–2, B–3, B–4, B–5, and B–6 in appendix A to this subpart. Symbols and abbreviations used in this subpart are listed in table B–5 of appendix A to this subpart.

§ 53.21 Test conditions.

(a) *Set-up and start-up* of the test analyzer shall be in strict accordance with the operating instructions specified in the manual referred to in § 53.4(b)(3). Allow adequate warm-up or stabilization time as indicated in the operating instructions before beginning the tests. The test procedures assume that the test analyzer has a conventional analog measurement signal output that is connected to a suitable strip chart recorder of the servo, null-balance type. This recorder shall have a chart width of at least 25 centimeters, chart speeds up to 10 cm per hour, a response time of 1 second or less, a deadband of not more than 0.25 percent of full scale, and capability either of reading measurements at least 5 percent below zero or of offsetting the zero by at least 5 percent. If the test analyzer does not have an analog signal output, or if a digital or other type of measurement data output is used for the tests, an alternative measurement data recording device (or devices) may be used for recording the test data, provided that the device is reasonably suited to the nature and purposes of the tests, and an analog representation of the analyzer measurements for each test can be plotted or otherwise generated that is reasonably similar to the analog measurement recordings that would be produced by a conventional chart recorder connected to a conventional analog signal output.

(b) *Calibration* of the test analyzer shall be carried out prior to conducting the tests described in this subpart. The calibration shall be as indicated in the manual referred to in § 53.4(b)(3) and as follows: If the chart recorder or alternative data recorder does not have below zero capability, adjust either the controls of the test analyzer or the chart or data recorder to obtain a +5% offset zero reading on the recorder chart to facilitate observing negative response or drift. If the candidate method is not capable of negative response, the test analyzer (not the data recorder) shall be operated with a similar offset zero. Construct and submit a calibration curve showing a plot of recorder scale readings or other measurement output readings (vertical or y-axis) against pollutant concentrations presented to the analyzer for measurement (horizontal or x-axis). If applicable, a plot of base analog output units (volts, millivolts, milliamps, *etc.*) against pollutant concentrations shall also be obtained and submitted. All such calibration plots shall consist of at least seven (7) approximately equally spaced, identifiable points, including 0 and 90 ± 5 percent of the upper range limit (URL).

(c) Once the test analyzer has been set up and calibrated and the tests started, manual adjustment or normal periodic maintenance is permitted only every 3 days. Automatic adjustments which the test analyzer performs by itself are permitted at any time. The submitted records shall show clearly when any manual adjustment or periodic maintenance was made during the tests and describe the specific operations performed.

(d) If the test analyzer should malfunction during any of the performance tests, the tests for that parameter shall be repeated. A detailed explanation of the malfunction, remedial action taken, and whether recalibration was necessary (along with all pertinent records and charts) shall be submitted. If more than one malfunction occurs, all performance test procedures for all parameters shall be repeated.

(e) Tests for all performance parameters shall be completed on the same test analyzer; however, use of multiple test analyzers to accelerate testing is permissible for testing additional ranges of a multi-range candidate method.

§ 53.22 Generation of test atmospheres.

(a) Table B–2 to subpart B of part 53 specifies preferred methods for generating test atmospheres and suggested methods of verifying their concentrations. Only one means of establishing the concentration of a test atmosphere is normally required, provided that that means is adequately accurate and credible. If the method of generation can produce accurate, reproducible concentrations, verification is optional. If the method of generation is not reproducible or reasonably quantifiable, then establishment of the concentration by

some credible verification method is required.

(b) The test atmosphere delivery system shall be designed and constructed so as not to significantly alter the test atmosphere composition or concentration during the period of the test. The system shall be vented to insure that test atmospheres are presented to the test analyzer at very nearly atmospheric pressure. The delivery system shall be fabricated from borosilicate glass, FEP Teflon, or other material that is inert with regard to the gas or gases to be used.

(c) The output of the test atmosphere generation system shall be sufficiently stable to obtain stable response readings from the test analyzer during the required tests. If a permeation device is used for generation of a test atmosphere, the device, as well as the air passing over it, shall be controlled to 0.1 °C.

(d) All diluent air shall be zero air free of contaminants likely to react with the test atmospheres or cause a detectable response on the test analyzer.

(e) The concentration of each test atmosphere used shall be quantitatively established and/or verified before or during each series of tests. Samples for verifying test concentrations shall be collected from the test atmosphere delivery system as close as feasible to the sample intake port of the test analyzer.

(f) The accuracy of all flow measurements used to calculate test atmosphere concentrations shall be documented and referenced to a primary flow rate or volume standard (such as a spirometer, bubble meter, *etc.*). Any corrections shall be clearly shown. All flow measurements given in volume units shall be standardized to 25 °C and 760 mm Hg.

(g) Schematic drawings, photos, descriptions, and other information showing complete procedural details of the test atmosphere generation, verification, and delivery system shall be provided. All pertinent calculations shall be clearly indicated.

§ 53.23 Test procedures.

(a) *Range*—(1) *Technical definition.* The nominal minimum and maximum concentrations that a method is capable of measuring.

Note to § 53.23(a)(1): The nominal range is given as the lower and upper range limits in concentration units, for example, 0–0.5 parts per million (ppm).

(2) *Test procedure.* Determine and submit a suitable calibration curve, as specified in § 53.21(b), showing the test analyzer's measurement response over at least 95 percent of the required or indicated measurement range.

Note to § 53.23(a)(2): A single calibration curve for each measurement range for which an FRM or FEM designation is sought will normally suffice.

(b) *Noise*—(1) *Technical definition.* Spontaneous, short duration deviations in measurements or measurement signal output, about the mean output, that are not caused by input concentration changes. Measurement noise is determined as the standard deviation of a series of measurements of a constant concentration about the mean and is expressed in concentration units.

(2) *Test procedure.* (i) Allow sufficient time for the test analyzer to warm up and stabilize. Determine measurement noise at each of two fixed concentrations, first using zero air and then a pollutant test gas concentration as indicated below. The noise limit specification in table B–1 to subpart B of part 53 shall apply to both of these tests.

(ii) For an analyzer with an analog signal output, connect an integrating-type digital meter (DM) suitable for the test analyzer's output and accurate to three significant digits, to determine the analyzer's measurement output signal.

Note to § 53.23(b)(2): Use of a chart recorder in addition to the DM is optional.

(iii) Measure zero air with the test analyzer for 60 minutes. During this 60-minute interval, record twenty-five (25) test analyzer concentration measurements or DM readings at 2-minute intervals. (See Figure B–2 in appendix A of this subpart.)

(iv) If applicable, convert each DM test reading to concentration units (ppm) or adjust the test readings (if necessary) by reference to the test analyzer's calibration curve as determined in § 53.21(b). Label and record the test measurements or converted DM readings as $r_1, r_2, r_3 \ldots r_i \ldots r_{25}$.

(v) Calculate measurement noise as the standard deviation, S, as follows:

$$S = \sqrt{\frac{1}{24}\left[\sum_{i=1}^{25} r_i^2 - \frac{1}{25}\left(\sum_{i=1}^{25} r_i\right)^2\right]}$$

Where i indicates the i-th test measurement or DM reading in ppm.

(vi) Let S at 0 ppm be identified as S_0; compare S_0 to the noise limit specification given in table B–1 to subpart B of part 53.

(vii) Repeat steps in Paragraphs (b)(2)(iii) through (v) of this section using a pollutant test atmosphere concentration of 80 ± 5 percent of the URL instead of zero air, and let S at 80 percent of the URL be identified as S_{80}. Compare S_{80} to the noise limit specification given in table B–1 to subpart B of part 53.

(viii) Both S_0 and S_{80} must be less than or equal to the table B–1 to subpart B of part 53 noise limit specification to pass the test for the noise parameter.

(c) *Lower detectable limit*—(1) *Technical definition.* The minimum pollutant concentration that produces a measurement or measurement output signal of at least twice the noise level.

(2) *Test procedure.* (i) Allow sufficient time for the test analyzer to warm up and stabilize. Measure zero air and record the stable measurement reading in ppm as B_Z. (See Figure B–3 in appendix A of this subpart.)

(ii) Generate and measure a pollutant test concentration equal to the value for the lower detectable limit specified in table B–1 to subpart B of part 53.

Note to § 53.23(c)(2): If necessary, the test concentration may be generated or verified at a higher concentration, then quantitatively and accurately diluted with zero air to the final required test concentration.

(iii) Record the test analyzer's stable measurement reading, in ppm, as B_L.

(iv) Determine the lower detectable limit (LDL) test result as $LDL = B_L - B_Z$. Compare this LDL value with the noise level, S_0, determined in § 53.23(b), for the 0 concentration test atmosphere. LDL must be equal to or higher than $2 \times S_0$ to pass this test.

(d) *Interference equivalent*—(1) *Technical definition.* Positive or negative measurement response caused by a substance other than the one being measured.

(2) *Test procedure.* The test analyzer shall be tested for all substances likely to cause a detectable response. The test analyzer shall be challenged, in turn, with each potential interfering agent (interferent) specified in table B–3 to subpart B of part 53. In the event that there are substances likely to cause a significant interference which have not been specified in table B–3 to subpart B of part 53, these substances shall also be tested, in a manner similar to that for the specified interferents, at a concentration substantially higher than that likely to be found in the ambient air. The interference may be either positive or negative, depending on whether the test analyzer's measurement response is increased or decreased by the presence of the interferent. Interference equivalents shall be determined by mixing each interferent, one at a time, with the pollutant at an interferent test concentration not lower than the test concentration specified in table B–3 to subpart B of part 53 (or as otherwise required for unlisted interferents), and

comparing the test analyzer's measurement response to the response caused by the pollutant alone. Known gas-phase reactions that might occur between a listed interferent and the pollutant are designated by footnote 3 in table B–3 to subpart B of part 53. In these cases, the interference equivalent shall be determined without mixing with the pollutant.

(i) Allow sufficient time for warm-up and stabilization of the test analyzer.

(ii) For a candidate method using a prefilter or scrubber device based upon a chemical reaction to derive part of its specificity and which device requires periodic service or maintenance, the test analyzer shall be ''conditioned'' prior to conducting each interference test series. This requirement includes conditioning for the NO_2 converter in chemiluminescence $NO/NO_2/NO_X$ analyzers and for the ozone scrubber in UV-absorption ozone analyzers. Conditioning is as follows:

(A) Service or perform the indicated maintenance on the scrubber or prefilter device, as if it were due for such maintenance, as directed in the manual referred to in § 53.4(b)(3).

(B) Before testing for each potential interferent, allow the test analyzer to sample through the prefilter or scrubber device a test atmosphere containing the interferent at a concentration not lower than the value specified in table B–3 to subpart B of part 53 (or, for unlisted potential interferents, at a concentration substantially higher than likely to be found in ambient air). Sampling shall be at the normal flow rate and shall be continued for 6 continuous hours prior to the interference test series. Conditioning for all applicable interferents prior to any of the interference tests is permissible. Also permissible is simultaneous conditioning with multiple interferents, provided no interferent reactions are likely to occur in the conditioning system.

(iii) Generate three test atmosphere streams as follows:

(A) Test atmosphere *P:* Pollutant test concentration.

(B) Test atmosphere *I:* Interferent test concentration.

(C) Test atmosphere *Z:* Zero air.

(iv) Adjust the individual flow rates and the pollutant or interferent generators for the three test atmospheres as follows:

(A) The flow rates of test atmospheres *I* and *Z* shall be equal.

(B) The concentration of the pollutant in test atmosphere *P* shall be adjusted such that when *P* is mixed (diluted) with either test atmosphere *I* or *Z,* the resulting concentration of pollutant shall be as specified in table B–3 to subpart B of part 53.

(C) The concentration of the interferent in test atmosphere *I* shall be adjusted such that when *I* is mixed (diluted) with test atmosphere *P,* the resulting concentration of interferent shall be not less than the value specified in table B–3 to subpart B of part 53 (or as otherwise required for unlisted potential interferents).

(D) To minimize concentration errors due to flow rate differences between *I* and *Z,* it is recommended that, when possible, the flow rate of *P* be from 10 to 20 times larger than the flow rates of *I* and *Z.*

(v) Mix test atmospheres *P* and *Z* by passing the total flow of both atmospheres through a (passive) mixing component to insure complete mixing of the gases.

(vi) Sample and measure the mixture of test atmospheres *P* and *Z* with the test analyzer. Allow for a stable measurement reading, and record the reading, in concentration units, as *R* (see Figure B–3).

(vii) Mix test atmospheres *P* and *I* by passing the total flow of both atmospheres through a (passive) mixing component to insure complete mixing of the gases.

(viii) Sample and measure this mixture of *P* and *I* with the test analyzer. Record the stable measurement reading, in concentration units, as R_I.

(ix) Calculate the interference equivalent (*IE*) test result as:

$$IE = R_I - R.$$

IE must be within the limits (inclusive) specified in table B–1 to subpart B of part 53 for each interferent tested to pass the interference equivalent test.

(x) Follow steps (iii) through (ix) of this section, in turn, to determine the interference equivalent for each listed interferent as well as for any other potential interferents identified.

(xi) For those potential interferents which cannot be mixed with the pollutant, as indicated by footnote (3) in table B–3 to subpart B of part 53, adjust the concentration of test atmosphere *I* to the specified value without being mixed or diluted by the pollutant test atmosphere. Determine *IE* as follows:

(A) Sample and measure test atmosphere *Z* (zero air). Allow for a stable measurement reading and record the reading, in concentration units, as *R.*

(B) Sample and measure the interferent test atmosphere *I.* If the test analyzer is not capable of negative readings, adjust the analyzer (not the recorder) to give an offset zero. Record the stable reading in concentration units as R_I, extrapolating the calibration curve, if necessary, to represent negative readings.

(C) Calculate $IE = R_I - R$. *IE* must be within the limits (inclusive) specified in table B–1 to subpart B of part 53 for each interferent tested to pass the interference equivalent test.

(xii) Sum the *absolute value* of all the individual interference equivalent test results. This sum must be equal to or less than the total interferent limit given in table B–1 to subpart B of part 53 to pass the test.

(e) *Zero drift, span drift, lag time, rise time, fall time, and precision*—(1) *Technical definitions*—(i) *Zero drift:* The change in measurement response to zero pollutant concentration over 12- and 24-hour periods of continuous unadjusted operation.

(ii) *Span drift:* The percent change in measurement response to an up-scale pollutant concentration over a 24-hour period of continuous unadjusted operation.

(iii) *Lag time:* The time interval between a step change in input concentration and the first observable corresponding change in measurement response.

(iv) *Rise time:* The time interval between initial measurement response and 95 percent of final response after a step increase in input concentration.

(v) *Fall time:* The time interval between initial measurement response and 95 percent of final response after a step decrease in input concentration.

(vi) *Precision:* Variation about the mean of repeated measurements of the same pollutant concentration, expressed as one standard deviation.

(2) Tests for these performance parameters shall be accomplished over a period of seven (7) or fifteen (15) test days. During this time, the line voltage supplied to the test analyzer and the ambient temperature surrounding the analyzer shall be changed from day to day, as required in paragraph (e)(4) of this section. One test result for each performance parameter shall be obtained each test day, for seven (7) or fifteen (15) test days, as determined from the test results of the first seven days. The tests for each test day are performed in a single integrated procedure.

(3) The 24-hour test day may begin at any clock hour. The first approximately 12 hours of each test day are required for testing 12-hour zero drift. Tests for the other parameters shall be conducted any time during the remaining 12 hours.

(4) Table B–4 to subpart B of part 53 specifies the line voltage and room temperature to be used for each test day. The applicant may elect to specify a

wider temperature range (minimum and maximum temperatures) than the range specified in table B–4 to subpart B of part 53 and to conduct these tests over that wider temperature range in lieu of the specified temperature range. If the test results show that all test parameters of this section § 53.23(e) are passed over this wider temperature range, a subsequent FRM or FEM designation for the candidate method based in part on this test shall indicate approval for operation of the method over such wider temperature range. The line voltage and temperature shall be changed to the specified values (or to the alternative, wider temperature values, if applicable) at the start of each test day (*i.e.,* at the start of the 12-hour zero test). Initial adjustments (day zero) shall be made at a line voltage of 115 volts (rms) and a room temperature of 25 °C.

(5) The tests shall be conducted in blocks consisting of 3 test days each until 7 (or 15, if necessary) test results have been obtained. (The final block may contain fewer than three test days.) Test days need not be contiguous days, but during any idle time between tests or test days, the test analyzer must operate continuously and measurements must be recorded continuously at a low chart speed (or equivalent data recording) and included with the test data. If a test is interrupted by an occurrence other than a malfunction of the test analyzer, only the block during which the interruption occurred shall be repeated.

(6) During each test block, manual adjustments to the electronics, gas, or reagent flows or periodic maintenance shall not be permitted. Automatic adjustments that the test analyzer performs by itself are permitted at any time.

(7) At least 4 hours prior to the start of the first test day of each test block, the test analyzer may be adjusted and/or serviced according to the periodic maintenance procedures specified in the manual referred to in § 53.4(b)(3). If a new block is to immediately follow a previous block, such adjustments or servicing may be done immediately after completion of the day's tests for the last day of the previous block and at the voltage and temperature specified for that day, but only on test days 3, 6, 9, and 12.

Note to § 53.23(e)(7): If necessary, the beginning of the test days succeeding such maintenance or adjustment may be delayed as required to complete the service or adjustment operation.

(8) All measurement response readings to be recorded shall be converted to concentration units or adjusted (if necessary) according to the calibration curve. Whenever a test atmosphere is to be measured but a stable reading is not required, the test atmosphere shall be sampled and measured long enough to cause a change in measurement response of at least 10% of full scale. Identify all readings and other pertinent data on the strip chart (or equivalent test data record). (See Figure B–1 to subpart B of part 53 illustrating the pattern of the required readings.)

(9) *Test procedure.* (i) Arrange to generate pollutant test atmospheres as follows. Test atmospheres A_0, A_{20}, and A_{80} shall be maintained consistent during the tests and reproducible from test day to test day.

Test atmosphere	Pollutant concentration (percent)
A_0	Zero air.
A_{20}	20 ± 5 of the upper range limit.
A_{30}	30 ± 5 of the upper range limit.
A_{80}	80 ± 5 of the upper range limit.
A_{90}	90 ± 5 of the upper range limit.

(ii) For steps within paragraphs (e)(9)(xxv) through (e)(9)(xxxi) of this section, a chart speed of at least 10 centimeters per hour (or equivalent resolution for a digital representation) shall be used to clearly show changes in measurement responses. The actual chart speed, chart speed changes, and time checks shall be clearly marked on the chart.

(iii) *Test day 0.* Allow sufficient time for the test analyzer to warm up and stabilize at a line voltage of 115 volts and a room temperature of 25 °C. Adjust the zero baseline to 5 percent of chart (see § 53.21(b)) and recalibrate, if necessary. No further adjustments shall be made to the analyzer until the end of the tests on the third, sixth, ninth, or twelfth test day.

(iv) Measure test atmosphere A_0 until a stable measurement reading is obtained and record this reading (in ppm) as Z'_n, where $n = 0$ (see Figure B–4 in appendix A of this subpart).

(v) [Reserved.]

(vi) Measure test atmosphere A_{80}. Allow for a stable measurement reading and record it as S'_n, where $n = 0$.

(vii) The above readings for Z'_0 and S'_0 should be taken at least four (4) hours prior to the beginning of test day 1.

(viii) At the beginning of each test day, adjust the line voltage and room temperature to the values given in table B–4 to subpart B of part 53 (or to the corresponding alternative temperature if a wider temperature range is being tested).

(ix) Measure test atmosphere A_0 continuously for at least twelve (12) continuous hours during each test day.

(x) After the 12-hour zero drift test (step ix) is complete, sample test atmosphere A_0. A stable reading is not required.

(xi) Measure test atmosphere A_{20} and record the stable reading (in ppm) as P_1. (See Figure B–4 in appendix A.)

(xii) Sample test atmosphere A_{30}; a stable reading is not required.

(xiii) Measure test atmosphere A_{20} and record the stable reading as P_2.

(xiv) Sample test atmosphere A_0; a stable reading is not required.

(xv) Measure test atmosphere A_{20} and record the stable reading as P_3.

(xvi) Sample test atmosphere A_{30}; a stable reading is not required.

(xvii) Measure test atmosphere A_{20} and record the stable reading as P_4.

(xviii) Sample test atmosphere A_0; a stable reading is not required.

(xix) Measure test atmosphere A_{20} and record the stable reading as P_5.

(xx) Sample test atmosphere A_{30}; a stable reading is not required.

(xxi) Measure test atmosphere A_{20} and record the stable reading as P_6.

(xxii) Measure test atmosphere A_{80} and record the stable reading as P_7.

(xxiii) Sample test atmosphere A_{90}; a stable reading is not required.

(xxiv) Measure test atmosphere A_{80} and record the stable reading as P_8. Increase the chart speed to at least 10 centimeters per hour.

(xxv) Measure test atmosphere A_0. Record the stable reading as L_1.

(xxvi) Quickly switch the test analyzer to measure test atmosphere A_{80} and mark the recorder chart to show, or otherwise record, the exact time when the switch occurred.

(xxvii) Measure test atmosphere A_{80} and record the stable reading as P_9.

(xxviii) Sample test atmosphere A_{90}; a stable reading is not required.

(xxix) Measure test atmosphere A_{80} and record the stable reading as P_{10}.

(xxx) Measure test atmosphere A_0 and record the stable reading as L_2.

(xxxi) Measure test atmosphere A_{80} and record the stable reading as P_{11}.

(xxxii) Sample test atmosphere A_{90}; a stable reading is not required.

(xxxiii) Measure test atmosphere A_{80} and record the stable reading as P_{12}.

(xxxiv) Repeat steps within paragraphs (e)(9)(viii) through (e)(9)(xxxiii) of this section, each test day.

(xxxv) If zero and span adjustments are made after the readings are taken on

test days 3, 6, 9, or 12, complete all adjustments; then measure test atmospheres A_0 and $A_{80.}$ Allow for a stable reading on each, and record the readings as Z'_n and S'_n, respectively, where n = the test day number (3, 6, 9, or 12). These readings must be made at least 4 hours prior to the start of the next test day.

(10) Determine the results of each day's tests as follows. Mark the recorder chart to show readings and determinations.

(i) *Zero drift.* (A) Determine the 12-hour zero drift by examining the strip chart pertaining to the 12-hour continuous zero air test. Determine the minimum ($C_{min.}$) and maximum ($C_{max.}$) measurement readings (in ppm) during this period of 12 consecutive hours, extrapolating the calibration curve to negative concentration units if necessary. Calculate the 12-hour zero drift (12*ZD*) as $12ZD = C_{max.} - C_{min.}$ (See Figure B–5 in appendix A.)

(B) Calculate the 24-hour zero drift (24*ZD*) for the *n*-th test day as $24ZD_n = Z_n - Z_{n-1}$, or $24ZD_n = Z_n - Z'_{n-1}$ if zero adjustment was made on the previous test day, where $Z_n = ½(L_1+L_2)$ for L_1 and L_2 taken on the *n*-th test day.

(C) Compare 12*ZD* and 24*ZD* to the zero drift limit specifications in table B–1 to subpart B of part 53. Both 12*ZD* and 24*ZD* must be within the specified limits (inclusive) to pass the test for zero drift.

(ii) *Span drift.*

(A) Calculate the span drift (*SD*) as:

$$SD_n = \frac{S_n - S_{n-1}}{S_{n-1}} \times 100\%$$

or if a span adjustment was made on the previous test day,

$$SD_n = \frac{S_n - S'_{n-1}}{S'_{n-1}} \times 100\%$$

where

$$S_n = \frac{1}{6}\sum_{i=7}^{12} P_i ,$$

n indicates the *n*-th test day, and *i* indicates the *i*-th measurement reading on the *n*-th test day.

(B) *SD* must be within the span drift limits (inclusive) specified in table B–1 to subpart B of part 53 to pass the test for span drift.

(iii) *Lag time.* Determine, from the strip chart (or alternative test data record), the elapsed time in minutes between the change in test concentration (or mark) made in step (xxvi) and the first observable (two times the noise level) measurement response. This time must be equal to or less than the lag time limit specified in table B–1 to subpart B of part 53 to pass the test for lag time.

(iv) *Rise time.* Calculate 95 percent of measurement reading P_9 and determine, from the recorder chart (or alternative test data record), the elapsed time between the first observable (two times noise level) measurement response and a response equal to 95 percent of the P_9 reading. This time must be equal to or less than the rise time limit specified in table B–1 to subpart B of part 53 to pass the test for rise time.

(v) *Fall time.* Calculate five percent of ($P_{10} - L_2$) and determine, from the strip chart (or alternative test record), the elapsed time in minutes between the first observable decrease in measurement response following reading P_{10} and a response equal to L_2 + five percent of ($P_{10} - L_2$). This time must be equal to or less than the fall time limit specification in table B–1 to subpart B of part 53 to pass the test for fall time.

(vi) *Precision.* Calculate precision (both P_{20} and P_{80}) for each test day as follows:

(A)

$$P_{20} = \frac{1}{URL}\sqrt{\frac{1}{5}\left[\sum_{i=1}^{6} P_i^2 - \frac{1}{6}\left(\sum_{i=1}^{6} P_i\right)^2\right]} \times 100\%$$

(B)

$$P_{80} = \frac{1}{URL}\sqrt{\frac{1}{5}\left[\sum_{i=7}^{12} P_i^2 - \frac{1}{6}\left(\sum_{i=7}^{12} P_i\right)^2\right]} \times 100\%$$

(C) Both P_{20} and P_{80} must be equal to or less than the precision limits specified in table B–1 to subpart B of part 53 to pass the test for precision.

BILLING CODE 6560–50–P

Figure B–1 to Subpart B of Part 53—Example

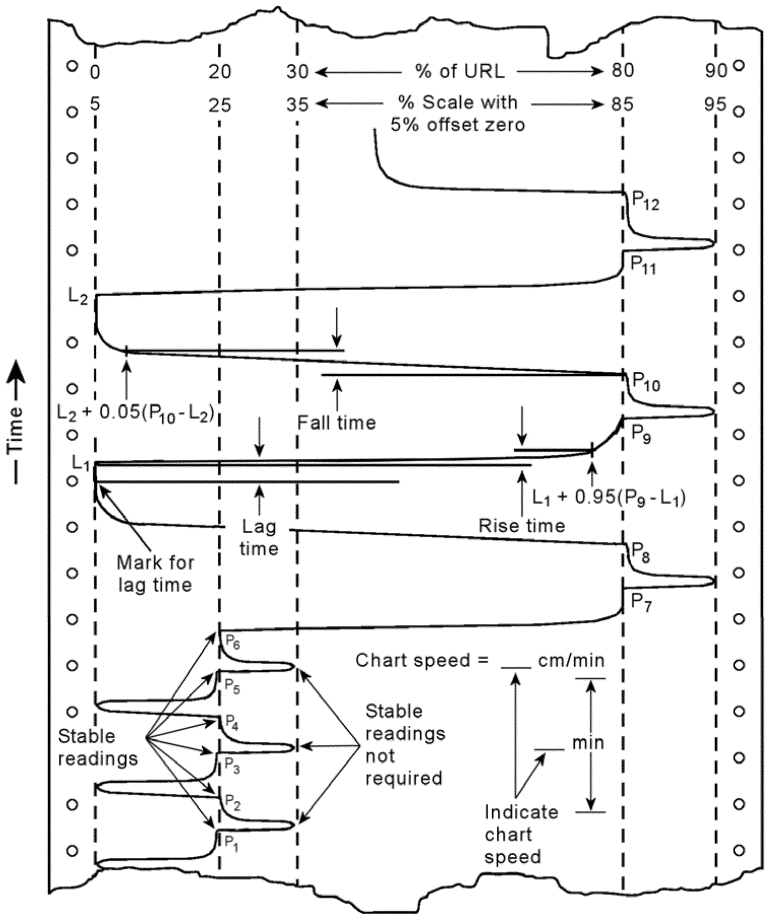

Figure B-1 to Subpart B of Part 53--Example showing the nature of the tracing obtained during the test sequence for 24-hour drift, lag time, rise time, fall time, and precision. The time scale has been greatly compressed.

TABLE B-1 TO SUBPART B OF PART 53—PERFORMANCE LIMIT SPECIFICATIONS FOR AUTOMATED METHODS

Performance parameter	Units[1]	SO_2		O_3 (Std. range)	CO		NO_2 (Std. range)	Definitions and test procedures
		Std. range[3]	Lower range[2,3]		Std. range[3]	Lower range[2,3]		
1. Range	ppm	0-0.5	<0.5	0-0.5	0-50	<50	0-0.5	Sec. 53.23(a).
2. Noise	ppm	0.001	0.0005	0.005	0.2	0.1	0.005	Sec. 53.23(b).
3. Lower detectable limit	ppm	0.002	0.001	0.010	0.4	0.2	0.010	Sec. 53.23(c).
4. Interference equivalent								
Each interferent	ppm	±0.005	[4]±0.005	±0.02	±1.0	±0.5	±0.02	Sec. 53.23(d).
Total, all interferents	ppm	---	---	0.06	---		0.04	Sec. 53.23(d).
5. Zero drift, 12 and 24 hour	ppm	±0.004	±0.002	±0.02	±0.5	±0.3	±0.02	Sec. 53.23(e).
6. Span drift, 24 hour								
20% of upper range limit	Percent	---	---	±20.0	---	---	±20.0	Sec. 53.23(e)
80% of upper range limit	Percent	±3.0	±3.0	±5.0	±2.0	±2.0	±5.0	Sec. 53.23(e).
7. Lag time	Minutes	2	2	20	2.0	2.0	20	Sec. 53.23(e).
8. Rise time	Minutes	2	2	15	2.0	2.0	15	Sec. 53.23(e).
9. Fall time	Minutes	2	2	15	2.0	2.0	15	Sec. 53.23(e).
10. Precision								
20 % of upper range limit	ppm	---	---	0.010	---	---	0.020	Sec. 53.23(e).
	Percent	2	2	---	1.0	1.0	---	Sec. 53.23(e).
80 % of upper range limit	ppm	---	---	0.010	---	---	0.030	Sec. 53.23(e).
	Percent	2	2	---	1.0	1.0	---	Sec. 53.23(e).

1. To convert from parts per million (ppm) to $\mu g/m^3$ at 25 °C and 760 mm Hg, multiply by M/0.02447, where M is the molecular weight of the gas. Percent means percent of the upper measurement range limit.
2. Tests for interference equivalent and lag time do not need to be repeated for any lower range provided the test for the standard range shows that the lower range specification (if applicable) is met for each of these test parameters.
3. For candidate analyzers having automatic or adaptive time constants or smoothing filters, describe their functional nature, and describe and conduct suitable tests to demonstrate their function aspects and verify that performances for calibration, noise, lag, rise, fall times, and precision are within specifications under all applicable conditions. For candidate analyzers with operator-selectable time constants or smoothing filters, conduct calibration, noise, lag, rise, fall times, and precision tests at the highest and lowest settings that are to be included in the FRM or FEM designation.
4. For nitric oxide interference for the SO_2 UVF method, interference equivalent is ±0.0003 ppm for the lower range.

BILLING CODE 6560–50–C

TABLE B–2 TO SUBPART B OF PART 53—TEST ATMOSPHERES

Test gas	Generation	Verification
Ammonia	Permeation device. Similar to system described in references 1 and 2.	Indophenol method, reference 3.
Carbon dioxide	Cylinder of zero air or nitrogen containing CO_2 as required to obtain the concentration specified in table B–3.	Use NIST-certified standards whenever possible. If NIST standards are not available, obtain 2 standards from independent sources which agree within 2 percent, or obtain one standard and submit it to an independent laboratory for analysis, which must agree within 2 percent of the supplier's nominal analysis.
Carbon monoxide	Cylinder of zero air or nitrogen containing CO as required to obtain the concentration specified in table B–3.	Use an FRM CO analyzer as described in reference 8.
Ethane	Cylinder of zero air or nitrogen containing ethane as required to obtain the concentration specified in table B–3.	Gas chromatography, ASTM D2820, reference 10. Use NIST-traceable gaseous methane or propane standards for calibration.
Ethylene	Cylinder of pre-purified nitrogen containing ethylene as required to obtain the concentration specified in table B–3.	Do.
Hydrogen chloride	Cylinder[1] of pre-purified nitrogen containing approximately 100 ppm of gaseous HCl. Dilute with zero air to concentration specified in table B–3.	Collect samples in bubbler containing distilled water and analyze by the mercuric thiocyanate method, ASTM (D612), p. 29, reference 4.
Hydrogen sulfide	Permeation device system described in references 1 and 2.	Tentative method of analysis for H_2S content of the atmosphere, p. 426, reference 5.
Methane	Cylinder of zero air containing methane as required to obtain the concentration specified in table B–3.	Gas chromatography ASTM D2820, reference 10. Use NIST-traceable methane standards for calibration.
Nitric oxide	Cylinder[1] of pre-purified nitrogen containing approximately 100 ppm NO. Dilute with zero air to required concentration.	Gas phase titration as described in reference 6, section 7.1.
Nitrogen dioxide	1. Gas phase titration as described in reference 6 2. Permeation device, similar to system described in reference 6.	1. Use an FRM NO_2 analyzer calibrated with a gravimetrically calibrated permeation device. 2. Use an FRM NO_2 analyzer calibrated by gas-phase titration as described in reference 6.
Ozone	Calibrated ozone generator as described in reference 9	Use an FEM ozone analyzer calibrated as described in reference 9.

TABLE B–2 TO SUBPART B OF PART 53—TEST ATMOSPHERES—Continued

Test gas	Generation	Verification
Sulfur dioxide	1. Permeation device as described in references 1 and 2 2. Dynamic dilution of a cylinder containing approximately 100 ppm SO_2 as described in Reference 7.	Use an SO_2 FRM or FEM analyzer as described in reference 7.
Water	Pass zero air through distilled water at a fixed known temperature between 20° and 30 °C such that the air stream becomes saturated. Dilute with zero air to concentration specified in table B–3.	Measure relative humidity by means of a dew-point indicator, calibrated electrolytic or piezo electric hygrometer, or wet/dry bulb thermometer.
Xylene	Cylinder of pre-purified nitrogen containing 100 ppm xylene. Dilute with zero air to concentration specified in table B–3.	Use NIST-certified standards whenever possible. If NIST standards are not available, obtain 2 standards from independent sources which agree within 2 percent, or obtain one standard and submit it to an independent laboratory for analysis, which must agree within 2 percent of the supplier's nominal analysis.
Zero air	1. Ambient air purified by appropriate scrubbers or other devices such that it is free of contaminants likely to cause a detectable response on the analyzer. 2. Cylinder of compressed zero air certified by the supplier or an independent laboratory to be free of contaminants likely to cause a detectable response on the analyzer.	

[1] Use stainless steel pressure regulator dedicated to the pollutant measured.

Reference 1. O'Keefe, A. E., and Ortaman, G. C. ''Primary Standards for Trace Gas Analysis,'' *Anal. Chem.* 38, 760 (1966).

Reference 2. Scaringelli, F. P., A. E. . Rosenberg, E*, and Bell, J. P., ''Primary Standards for Trace Gas Analysis.'' *Anal. Chem.* 42, 871 (1970).

Reference 3. ''Tentative Method of Analysis for Ammonia in the Atmosphere (Indophenol Method)'', *Health Lab Sciences,* vol. 10, No. 2, 115–118, April 1973.

Reference 4. 1973 Annual Book of ASTM Standards, American Society for Testing and Materials, 1916 Race St., Philadelphia, PA.

Reference 5. *Methods for Air Sampling and Analysis,* Intersociety Committee, 1972, American Public Health Association, 1015.

Reference 6. 40 CFR 50 Appendix F, ''Measurement Principle and Calibration Principle for the Measurement of Nitrogen Dioxide in the Atmosphere (Gas Phase Chemiluminescence).''

Reference 7. 40 CFR 50 Appendix A–1, ''Measurement Principle and Calibration Procedure for the Measurement of Sulfur Dioxide in the Atmosphere (Ultraviolet Fluorscence).''

Reference 8. 40 CFR 50 Appendix C, ''Measurement Principle and Calibration Procedure for the Measurement of Carbon Monoxide in the Atmosphere (Non-Dispersive Infrared Photometry)''.

Reference 9. 40 CFR 50 Appendix D, ''Measurement Principle and Calibration Procedure for the Measurement of Ozone in the Atmosphere''.

Reference 10. ''Standard Test Method for C, through C5 Hydrocarbons in the Atmosphere by Gas Chromatography'', D 2820, 1987 Annual Book of Aston Standards, vol 11.03, American Society for Testing and Materials, 1916 Race St., Philadelphia, PA 19103.

TABLE B–3 TO SUBPART B OF PART 53—INTERFERENT TEST CONCENTRATION,[1] PARTS PER MILLION

Pollutant	Analyzer type	Hydrochloric acid	Ammonia	Hydrogen sulfide	Sulfur dioxide	Nitrogen dioxide	Nitric oxide	Carbon dioxide	Ethylene	Ozone	Mxylene	Water vapor	Carbon monoxide	Methane	Ethane	Naphthalene
SO_2	Ultraviolet fluorescence			[5]0.1	[4]0.14	0.5	0.5			0.5	0.2	20,000				[6]0.05
SO_2	Flame photometric			0.01	[4]0.14			750				[3]20,000	50			
SO_2	Gas chromatography			0.1	[4]0.14			750				[3]20,000	50			
SO_2	Spectrophotometric-wet chemical (pararosanaline).	0.2	0.1	0.1	[4]0.14	0.5		750		0.5						
SO_2	Electrochemical	0.2	0.1	0.1	[4]0.14	0.5	0.5		0.2	0.5		[3]20,000				
SO_2	Conductivity	0.2	0.1		[4]0.14	0.5		750								
SO_2	Spectrophotometric-gas phase, including DOAS.				[4]0.14	0.5				0.5	0.2					
O_3	Chemiluminescent			[3]0.1				750		[4]0.08		[3]20,000				
O_3	Electrochemical		[3]0.1		0.5	0.5				[4]0.08						
O_3	Spectrophotometric-wet chemical (potassium iodide).		[3]0.1		0.5	0.5	[3]0.5			[4]0.08						
O_3	Spectrophotometric-gas phase, including ultraviolet absorption and DOAS).				0.5	0.5	0.5			[4]0.08	0.02	20,000				
CO	Non-dispersive Infrared							750				20,000	[4]10			
CO	Gas chromatography with flame ionization detector.											20,000	[4]10		0.5	
CO	Electrochemical						0.5		0.2			20,000	[4]10			
CO	Catalytic combustion-thermal detection.		0.1					750	0.2			20,000	[4]10	5.0	0.5	
CO	IR fluorescence							750				20,000	[4]10		0.5	
CO	Mercury replacement-UV photometric.								0.2				[4]10		0.5	
NO_2	Chemiluminescent		[3]0.1		0.5	[4]0.1	0.5					20,000				
NO_2	Spectrophotometric-wet chemical (azo-dye reaction).				0.5	[4]0.1	0.5	750		0.5						
NO_2	Electrochemical	0.2	[3]0.1		0.5	[4]0.1	0.5	750		0.5		20,000	50			
NO_2	Spectrophotometric-gas phase		[3]0.1		0.5	[4]0.1	0.5			0.5		20,000	50			

[1] Concentrations of interferent listed must be prepared and controlled to ±10 percent of the stated value.
[2] Analyzer types not listed will be considered by the Administrator as special cases.
[3] Do not mix with the pollutant.
[4] Concentration of pollutant used for test. These pollutant concentrations must be prepared to ±10 percent of the stated value.
[5] If candidate method utilizes an elevated-temperature scrubber for removal of aromatic hydrocarbons, perform this interference test.
[6] If naphthalene test concentration cannot be accurately quantified, remove the scrubber, use a test concentration that causes a full scale response, reattach the scrubber, and evaluate response for interference.

TABLE B–4 TO SUBPART B OF PART 53—LINE VOLTAGE AND ROOM TEMPERATURE TEST CONDITIONS

Test day	Line voltage,[1] rms	Room temperature,[2] °C	Comments
0	115	25	Initial set-up and adjustments.
1	125	20	
2	105	20	
3	125	30	Adjustments and/or periodic maintenance permitted at end of tests.
4	105	30	
5	125	20	
6	105	20	Adjustments and/or periodic maintenance permitted at end of tests.
7	125	30	Examine test results to ascertain if further testing is required.
8	105	30	
9	125	20	Adjustments and/or periodic maintenance permitted at end of tests.
10	105	20	
11	125	30	
12	105	30	Adjustments and/or periodic maintenance permitted at end of tests.
13	125	20	
14	105	20	
15	125	30	

[1] Voltage specified shall be controlled to ± 1 volt.
[2] Temperatures shall be controlled to ± 1 °C.

Table B–5 to Subpart B of Part 53—Symbols and Abbreviations

B_L—Analyzer reading at the specified *LDL* test concentration for the *LDL* test.
B_Z—analyzer reading at 0 concentration for the *LDL* test.
DM—Digital meter.
C_{max}—Maximum analyzer reading during the 12*ZD* test period.
C_{min}—Minimum analyzer reading during the 12*ZD* test period.
i—Subscript indicating the *i*-th quantity in a series.
IE—Interference equivalent.
L_1—First analyzer zero reading for the 24*ZD* test.
L_2—Second analyzer zero reading for the 24*ZD* test.
n—Subscript indicating the test day number.
P—Analyzer reading for the span drift and precision tests.
P_i—The *i*-th analyzer reading for the span drift and precision tests.
P_{20}—Precision at 20 percent of URL.
P_{80}—Precision at 80 percent of URL.
ppb—Parts per billion of pollutant gas (usually in air), by volume.
ppm—Parts per million of pollutant gas (usually in air), by volume.
R—Analyzer reading of pollutant alone for the *IE* test.
R_1—Analyzer reading with interferent added for the *IE* test.
r_i—the *i*-th analyzer or DM reading for the noise test.
S—Standard deviation of the noise test readings.
S_0—Noise value (*S*) measured at 0 concentration.
S_{80}—Noise value (*S*) measured at 80 percent of the URL.
S_n—Average of P_7 . . . P_{12} for the n-th test day of the SD test.
S'_n—Adjusted span reading on the *n*-th test day.
SD—Span drift
URL—Upper range limit of the analyzer's measurement range.
Z—Average of L_1 and L_2 readings for the 24ZD test.
Z_n—Average of L_1 and L_2 readings on the *n*-th test day for the 24ZD test.
Z'_n—Adjusted analyzer zero reading on the *n*-the test day for the 24ZD test.
ZD—Zero drift.
12*ZD*—12-hour zero drift.
24*ZD*—24-hour zero drift.

Appendix A to Subpart B of Part 53—Optional Forms for Reporting Test Results

BILLING CODE 6560–50–P

NOISE TEST DATA

Applicant _____ Date _____

Analyzer _____ Pollutant _____

Range _____ Test No. _____

READING NUMBER (i)	TIME	0% of URL		80% of URL	
		DM READING	r_i, ppm	DM READING	r_i, ppm
1					
2					
3					
4					
5					
6					
7					
8					
9					
10					
11					
12					
13					
14					
15					
16					
17					
18					
19					
20					
21					
22					
23					
24					
25					
STD. DEVIATION		S_0 =		S_{80} =	

Figure B-2. Form for noise test data (see §53.23(b)).

LDL and INTERFERENCE TEST DATA

Applicant _____ Date _____

Analyzer _____ Pollutant _____

TEST PARAMETER		READING or CALCULATION	TEST NUMBER														
			1	2	3	4	5	6	7	8	9	10	11	12	13	14	15
LOWER DETECTABLE LIMIT		B_Z															
		B_L															
		$LDL = B_L$ □ B_Z															
INTER-FERENCE EQUIV-ALENT	1	R_1															
		R_{I1}															
		$IE = R_{I1} - R_1$															
	2	R_2															
		R_{I2}															
		$IE = R_{I2} - R_2$															
	3*	R_3															
		R_{I3}															
		$IE = R_{I3} - R_3$															
	4*	R_4															
		R_{I4}															
		$IE = R_{I4} - R_4$															
	5*	R_5															
		R_{I5}															
		$IE = R_{I5} - R_5$															
	TOTAL*	$\sum_{i=1}^{n} \lvert IE_i \rvert$															

*If required.

Figure B-3. Form for test data and calculations for lower detectable limit (LDL) and interference equivalent (IE) (see § 53.23(c) and (d)).

DRIFT AND PRECISION TEST DATA

Applicant _____ Date _____

Analyzer _____ Pollutant _____

	ANALYZER READING, ppm															
TEST DAY	0	1	2	3	4	5	6	7	8	9	10	11	12	13	14	15
DATE																
P_1																
P_2																
P_3																
P_4																
P_5																
P_6																
P_7																
P_8																
P_9																
P_{10}																
P_{11}																
P_{12}																
$S_n = \frac{1}{6}\sum_{i=7}^{12} P_i$																
L_1																
L_2																
Z'_n																
S'_n																
C_{max}																
C_{min}																

Figure B-4. Form for drift and precision test data (see § 53.23(e)).

CALCULATION OF ZERO DRIFT, SPAN DRIFT, AND PRECISION

Applicant _____ Date _____

Analyzer _____ Pollutant _____

TEST PARAMETER		CALCULATION	TEST DAY (n)														
			1	2	3	4	5	6	7	8	9	10	11	12	13	14	15
ZERO DRIFT	12 HOUR	$12ZD = C_{max} - C_{min}$															
	24 HOUR	$Z = (L_1 + L_2)/2$															
		$24ZD = Z_n - Z_{n-1}$															
		$24ZD = Z'_n - Z'_{n-1}$															
SPAN DRIFT	24 HOUR	$S_n = \frac{1}{6}\sum_{i=7}^{12} P_i$															
		$SD_n = \frac{S_n - S_{n-1}}{S_{n-1}} \times 100\%$															
		$SD_n = \frac{S_n - S'_{n-1}}{S'_{n-1}} \times 100\%$															
PREC-ISION	20% URL (P_{20})	P_{20} = STANDARD DEVIATION of ($P_1 \ldots P_6$)															
	80% URL (P_{80})	P_{80} = STANDARD DEVIATION of ($P_7 \ldots P_{12}$)															

Figure B-5. Form for calculating zero drift, span drift, and precision (§ 53.23(e)).

TEST DATA SUMMARY

Applicant _____ Analyst _____

Analyzer _____ Pollutant _____

Range _____ Other information _____
Test dates _____

Performance Parameter		Table B-1 Spec.	Test Number (first set)							Test Number (second set)								Number of Failures	Pass or Fail
			1	2	3	4	5	6	7	8	9	10	11	12	13	14	15		
Noise, ppm	0% URL																		
	80% URL																		
LDL (> 2 x 0% noise)																			
Interference Equivalent, ppm	IE1																		
	IE2																		
	IE3																		
	IE4																		
	IE5																		
	IE6																		
	Total																		
Zero Drift, ppm	12 hr																		
	24 hr.																		
Span Drift, %	80% URL																		
Lag Time, min																			
Rise Time, min																			
Fall Time, min																			
Precision, percent	20% URL																		
	80% URL																		

Figure B-6. Form for reporting a summary of the test results (see § 53.23).

BILLING CODE 6560–50–C

PART 58—AMBIENT AIR QUALITY SURVEILLANCE

■ 5. The authority citation for part 58 continues to read as follows:

Authority: 42 U.S.C. 7403, 7410, 7601(a), 7611, and 7619.

Subpart B—[Amended]

■ 6. Section 58.10, is amended by adding paragraph (a)(7) to read as follows:

§ 58.10 Annual monitoring network plan and periodic network assessment.

(a) * * *

(7) A plan for establishing CO monitoring sites in accordance with the requirements of appendix D to this part shall be submitted to the EPA Regional Administrator. Plans for required CO monitors shall be submitted at least six months prior to the date such monitors must be established as required by section 58.13.

* * * * *

■ 7. Section 58.13 is amended by adding paragraph (e) to read as follows:

§ 58.13 Monitoring network completion.

* * * * *

(e) The CO monitors required under Appendix D, section 4.2 of this part must be physically established and operating under all of the requirements of this part, including the requirements of appendices A, C, D, and E to this part, no later than:

(1) January 1, 2015 for CO monitors in CBSAs having 2.5 million persons or more; or

(2) January 1, 2017 for other CO monitors.

■ 8. Appendix D to Part 58 is amended by revising section 4.2 to read as follows:

Appendix D to Part 58—Network Design Criteria for Ambient Air Quality Monitoring

* * * * *

4.2 Carbon Monoxide (CO) Design Criteria

4.2.1 General Requirements. (a) Except as provided in subsection (b), one CO monitor is required to operate collocated with one required near-road NO_2 monitor, as required in Section 4.3.2 of this part, in CBSAs having a population of 1,000,000 or more persons. If a CBSA has more than one required near-road NO_2 monitor, only one CO monitor is required to be collocated with a near-road NO_2 monitor within that CBSA.

(b) If a state provides quantitative evidence demonstrating that peak ambient CO concentrations would occur in a near-road location which meets microscale siting criteria in Appendix E of this part but is not a near-road NO_2 monitoring site, then the EPA Regional Administrator may approve a request by a state to use such an alternate near-road location for a CO monitor in place of collocating a monitor at near-road NO_2 monitoring site.

4.2.2 Regional Administrator Required Monitoring. (a) The Regional Administrators, in collaboration with states, may require additional CO monitors above the minimum number of monitors required in 4.2.1 of this part, where the minimum monitoring requirements are not sufficient to meet monitoring objectives. The Regional Administrator may require, at his/her discretion, additional monitors in situations where data or other information suggest that CO concentrations may be approaching or exceeding the NAAQS. Such situations include, but are not limited to, (1) characterizing impacts on ground-level concentrations due to stationary CO sources, (2) characterizing CO concentrations in downtown areas or urban street canyons, and (3) characterizing CO concentrations in areas that are subject to high ground level CO concentrations particularly due to or enhanced by topographical and meteorological impacts. The Regional Administrator and the responsible State or local air monitoring agency shall work together to design and maintain the most appropriate CO network to address the data needs for an area, and include all monitors under this provision in the annual monitoring network plan.

4.2.3 CO Monitoring Spatial Scales. (a) Microscale and middle scale measurements are the most useful site classifications for CO monitoring sites since most people have the potential for exposure on these scales. Carbon monoxide maxima occur primarily in areas near major roadways and intersections with high traffic density and often in areas with poor atmospheric ventilation.

(1) *Microscale*—Microscale measurements typically represent areas in close proximity to major roadways, within street canyons, over sidewalks, and in some cases, point and area sources. Emissions on roadways result in high ground level CO concentrations at the microscale, where concentration gradients generally exhibit a marked decrease with increasing downwind distance from major roads, or within downtown areas including urban street canyons. Emissions from stationary point and area sources, and non-road sources may, under certain plume conditions, result in high ground level concentrations at the microscale.

(2) *Middle scale*—Middle scale measurements are intended to represent areas with dimensions from 100 meters to 0.5 kilometer. In certain cases, middle scale measurements may apply to areas that have a total length of several kilometers, such as ''line'' emission source areas. This type of emission sources areas would include air quality along a commercially developed street or shopping plaza, freeway corridors, parking lots and feeder streets.

(3) *Neighborhood scale*—Neighborhood scale measurements are intended to represent areas with dimensions from 0.5 kilometers to 4 kilometers. Measurements of CO in this category would represent conditions throughout some reasonably urban sub-regions. In some cases, neighborhood scale data may represent not only the immediate neighborhood spatial area, but also other similar such areas across the larger urban area. Neighborhood scale measurements provide relative area-wide concentration data which are useful for providing relative urban background concentrations, supporting health and scientific research, and for use in modeling.

* * * * *

■ 9. Appendix E to Part 58 is amended by revising sections 2 and 6.2(a), 6.2(b), 6.2(c), and Table E–4 to read as follows:

Appendix E to Part 58—Probe and Monitoring Path Siting Criteria for Ambient Air Quality Monitoring

* * * * *

2. Horizontal and Vertical Placement

The probe or at least 80 percent of the monitoring path must be located between 2 and 15 meters above ground level for all O_3 and SO_2 monitoring sites, and for neighborhood or larger spatial scale Pb, PM_{10}, $PM_{10-2.5}$, $PM_{2.5}$, NO_2, and CO sites. Middle scale $PM_{10-2.5}$ sites are required to have sampler inlets between 2 and 7 meters above ground level. Microscale Pb, PM_{10}, $PM_{10-2.5}$, and $PM_{2.5}$ sites are required to have sampler inlets between 2 and 7 meters above ground level. Microscale near-road NO_2 monitoring sites are required to have sampler inlets between 2 and 7 meters above ground level. The inlet probes for microscale carbon monoxide monitors that are being used to measure concentrations near roadways must be between 2 and 7 meters above ground level. Those inlet probes for microscale carbon monoxide monitors measuring concentrations near roadways in downtown areas or urban street canyons must be between 2.5 and 3.5 meters above ground level. The probe or at least 90 percent of the monitoring path must be at least 1 meter vertically or horizontally away from any supporting structure, walls, parapets, penthouses, *etc.,* and away from dusty or dirty areas. If the probe or a significant portion of the monitoring path is located near the side of a building or wall, then it should be located on the windward side of the building relative to the prevailing wind direction during the season of highest concentration potential for the pollutant being measured.

* * * * *

6. * * *

6.2 Spacing for Carbon Monoxide Probes and Monitoring Paths. (a) Near-road microscale CO monitoring sites, including those located in downtown areas, urban street canyons, and other near-road locations such as those adjacent to highly trafficked roads, are intended to provide a measurement of the influence of the immediate source on the pollution exposure on the adjacent area.

(b) Microscale CO monitor inlets probes in downtown areas or urban street canyon locations shall be located a minimum distance of 2 meters and a maximum distance of 10 meters from the edge of the nearest traffic lane.

(c) Microscale CO monitor inlet probes in downtown areas or urban street canyon locations shall be located at least 10 meters from an intersection and preferably at a midblock location. Midblock locations are preferable to intersection locations because intersections represent a much smaller portion of downtown space than do the streets between them. Pedestrian exposure is probably also greater in street canyon/corridors than at intersections.

(d) Microscale CO monitor inlet probes in the near-road environment, outside of downtown areas or urban street canyons, shall be as near as practicable to the outside nearest edge of the traffic lanes of the target road segment; but shall not be located at a distance greater than 50 meters, in the horizontal, from the outside nearest edge of the traffic lanes of the target road segment.

(e) In determining the minimum separation between a neighborhood scale monitoring site and a specific roadway, the presumption is made that measurements should not be substantially influenced by any one roadway. Computations were made to determine the separation distance, and Table E–2 of this appendix provides the required minimum separation distance between roadways and a probe or 90 percent of a monitoring path. Probes or monitoring paths that are located closer to roads than this criterion allows should not be classified as neighborhood scale, since the measurements from such a site would closely represent the middle scale. Therefore, sites not meeting this criterion should be classified as middle scale.

* * * * *

TABLE E–4 OF APPENDIX E TO PART 58—SUMMARY OF PROBE AND MONITORING PATH SITING CRITERIA

Pollutant	Scale (maximum monitoring path length, meters) [1]	Height from ground to probe, inlet or 80% of monitoring path [1]	Horizontal and vertical distance from supporting structures [2] to probe, inlet or 90% of monitoring path [1] (meters)	Distance from trees to probe, inlet or 90% of monitoring path [1] (meters)	Distance from roadways to probe, inlet or monitoring path [1] (meters)
SO_2 [3 4 5 6]	Middle (300 m) Neighborhood Urban, and Regional (1 km).	2–15	> 1	> 10	N/A.
CO [4 5 7]	Micro [downtown or street canyon sites], micro [near-road sites], middle (300 m) and Neighborhood (1 km).	2.5–3.5; 2–7; 2–15.	> 1	> 10	2–10 for downtown areas or street canyon microscale; 50 for near-road microscale; see Table E–2 of this appendix for middle and neighborhood scales.
O_3 [3 4 5]	Middle (300 m) Neighborhood, Urban, and Regional (1 km).	2–15	> 1	> 10	See Table E–1 of this appendix for all scales.
NO_2 [3 4 5]	Micro (Near-road [50–300]) Middle (300m) Neighborhood, Urban, and Regional (1 km).	2–7 (micro); 2–15 (all other scales).	> 1	> 10	50 meters for near-road microscale; See Table E–1 of this appendix for all other scales.
Ozone precursors (for PAMS) [3 4 5]	Neighborhood and Urban (1 km).	2–15	> 1	> 10	See Table E–4 of this appendix for all scales.
PM, Pb [3 4 5 6 8]	Micro: Middle, Neighborhood, Urban and Regional.	2–7 (micro); 2–7 (middle $PM_{10-2.5}$); 2–15 (all other scales).	> 2 (all scales, horizontal distance only).	> 10 (all scales)	2–10 (micro); see Figure E–1 of this appendix for all other scales.

N/A—Not applicable.

[1] Monitoring path for open path analyzers is applicable only to middle or neighborhood scale CO monitoring, middle, neighborhood, urban, and regional scale NO_2 monitoring, and all applicable scales for monitoring SO_2,O_3, and O_3 precursors.

[2] When probe is located on a rooftop, this separation distance is in reference to walls, parapets, or penthouses located on roof.

[3] Should be > 20 meters from the drip-line of tree(s) and must be 10 meters from the drip-line when the tree(s) act as an obstruction.

[4] Distance from sampler, probe, or 90% of monitoring path to obstacle, such as a building, must be at least twice the height the obstacle protrudes above the sampler, probe, or monitoring path. Sites not meeting this criterion may be classified as middle scale (see text).

[5] Must have unrestricted airflow 270 degrees around the probe or sampler; 180 degrees if the probe is on the side of a building or a wall.

[6] The probe, sampler, or monitoring path should be away from minor sources, such as furnace or incineration flues. The separation distance is dependent on the height of the minor source's emission point (such as a flue), the type of fuel or waste burned, and the quality of the fuel (sulfur, ash, or lead content). This criterion is designed to avoid undue influences from minor sources.

[7] For microscale CO monitoring sites in downtown areas or street canyons (not at near-road NO_2 monitoring sites), the probe must be > 10 meters from a street intersection and preferably at a midblock location.

[8] Collocated monitors must be within 4 meters of each other and at least 2 meters apart for flow rates greater than 200 liters/min or at least 1 meter apart for samplers having flow rates less than 200 liters/min to preclude airflow interference.

* * * * *

[FR Doc. 2011–21359 Filed 8–30–11; 8:45 am]

BILLING CODE 6560–50–P

FEDERAL REGISTER

Vol. 76 Wednesday,

No. 169 August 31, 2011

Part III

Department of the Interior

Fish and Wildlife Service

50 CFR Part 17

Endangered and Threatened Wildlife and Plants; Revised Designation of Critical Habitat for the Sonoma County Distinct Population Segment of California Tiger Salamander; Final Rule

DEPARTMENT OF THE INTERIOR

Fish and Wildlife Service

50 CFR Part 17

[Docket No. FWS–R8–ES–2009–0044; MO 92210–0–0009]

RIN 1018–AW86

Endangered and Threatened Wildlife and Plants; Revised Designation of Critical Habitat for the Sonoma County Distinct Population Segment of California Tiger Salamander

AGENCY: Fish and Wildlife Service, Interior.

ACTION: Final rule.

SUMMARY: We, the U.S. Fish and Wildlife Service (Service), designate revised critical habitat for the Sonoma County distinct population segment of the California tiger salamander (*Ambystoma californiense*) (Sonoma California tiger salamander) under the Endangered Species Act of 1973, as amended (Act). In total, approximately 47,383 acres (19,175 hectares) of land are being designated as revised critical habitat for the Sonoma California tiger salamander.

DATES: This rule becomes effective on September 30, 2011.

ADDRESSES: This final rule and the associated final economic analysis are available on the Internet at *http://www.regulations.gov.* Comments and materials received, as well as supporting documentation used in preparing this final rule, are available for public inspection, by appointment, during normal business hours, at the U.S. Fish and Wildlife Service, Sacramento Fish and Wildlife Office, 2800 Cottage Way, W–2605, Sacramento, CA 95825; telephone 916–414–6600; facsimile 916–414–6713.

FOR FURTHER INFORMATION CONTACT: Susan Moore, Field Supervisor, U.S. Fish and Wildlife Service, Sacramento Fish and Wildlife Office, 2800 Cottage Way, W–2605, Sacramento, CA 95825; telephone 916–414–6600; facsimile 916–414–6713. If you use a telecommunications device for the deaf (TDD), call the Federal Information Relay Service (FIRS) at 800–877–8339.

SUPPLEMENTARY INFORMATION:

Background

It is our intent to discuss in this final rule only those topics directly relevant to the development and designation of critical habitat for the Sonoma California tiger salamander under the Act (16 U.S.C. 1531 *et seq.*). For more information on the biology and ecology of the California tiger salamander, refer to the final listing rule published in the **Federal Register** on March 19, 2003 (68 FR 13498). For information on the California tiger salamander critical habitat in Sonoma County, refer to the proposed rule to designate critical habitat for the Sonoma California tiger salamander published in the **Federal Register** on August 18, 2009 (74 FR 41662). We published information on the associated draft economic analysis for the proposed rule to designate critical habitat and changes to the proposed rule in the **Federal Register** on January 18, 2011 (76 FR 2863). A subsequent proposed change to include additional area in our proposal to designate critical habitat was published in the **Federal Register** on June 21, 2011 (76 FR 36068).

Previous Federal Actions

On March 19, 2003, we listed the Sonoma California tiger salamander as endangered (68 FR 13498; March 19, 2003). At that time, we determined that our budget for listing actions was not sufficient to complete concurrent designation of critical habitat for the species. On October 13, 2004, a complaint was filed in the U.S. District Court for the Northern District of California (*Center for Biological Diversity et al.* v. *U.S. Fish and Wildlife Service et al.* (Case No. C–04–4324–FMS (N.D. Cal. 2005))), which in part challenged the failure of designating critical habitat for the Sonoma California tiger salamander. On February 3, 2005, the District Court approved a settlement agreement that required the Service to submit a final determination on the proposed critical habitat designation for publication in the **Federal Register** on or before December 1, 2005.

On August 2, 2005 (70 FR 44301), the Service published a proposed rule to designate approximately 74,223 acres (ac) (30,037 hectares (ha)) of critical habitat, and on November 17, 2005, we published a revised proposed rule indicating we were considering approximately 21,298 ac (8,519 ha) for the final designation (70 FR 69717). In the 2005 revised proposed rule, we proposed critical habitat in areas within the range where, at that time, we had credible records of breeding, as reported by biologists that were permitted by the Service to survey for the California tiger salamander. On December 14, 2005, the Service published a final rule in the **Federal Register** (70 FR 74137), which identified four areas essential to the conservation of the species, consisting of 17,418 ac (7,049 ha) located mostly west of the developed portions of Santa Rosa, Rohnert Park, and Cotati, in Sonoma County. Each one of the areas contained the physical or biological features essential to the conservation of the species and represented a breeding center for the species. However, based on a conservation strategy that was then under development by local governments and organizations, all the areas were excluded in the final rule, resulting in a designation of zero (0) ac (0 ha) of critical habitat.

On February 29, 2008, we received a notice of intent to sue from the Center for Biological Diversity that challenged the Service's final designation of critical habitat, claiming that it was not based on the best available scientific information. On May 5, 2009, the Court approved a stipulated settlement agreement in which the Service agreed to publish a revised proposed rule within 90 days that encompassed the same geographic area as the August 2005 proposal. The proposed rule that published in the **Federal Register** on August 18, 2009 (74 FR 41662), complies with the May 5, 2009, stipulated agreement. The Service also agreed in the May 5, 2009, stipulated settlement agreement to submit a final rule to the **Federal Register** on or before July 1, 2011. On June 9, 2011, the Court approved an extension to submit a final rule to the **Federal Register** on or before September 1, 2011. The extension was granted to accommodate a public comment period on modification of the proposed critical habitat based on information received during the previous January 18, 2011, public comment period.

On August 4, 2004, we listed the Central population of the California tiger salamander as a threatened Distinct Population Segment (DPS) (69 FR 47211). At that time, we reclassified the California tiger salamander as threatened throughout its range, removing the Santa Barbara County and Sonoma County populations as separately listed DPSs (69 FR 47241). On August 18, 2005, as a result of litigation on the reclassification of the Santa Barbara and Sonoma County DPSs of the California tiger salamander (*Center for Biological Diversity et al.* v. *United States Fish and Wildlife Service et al.* (Case No. C–04–4324–WHA (N.D. Cal. 2005))), the District Court of Northern California sustained the portion of the 2004 final rule pertaining to listing the Central California tiger salamander as threatened, with a special rule, and vacated the 2004 rule with regard to the Santa Barbara County and Sonoma County DPSs, reinstating their prior listing as endangered. We made the necessary changes to the

information included in the Code of Federal Regulations in the regulatory section of the January 18, 2011, revised proposed rule to designate critical habitat for the Sonoma California tiger salamander (76 FR 2863), and are finalizing the changes in this final rule.

Summary of Comments and Recommendations

We requested written comments from the public on the proposed revised designation of critical habitat for the Sonoma California tiger salamander during three comment periods. The first comment period opened with the publication of the proposed rule in the **Federal Register** on August 18, 2009 (74 FR 41662), and closed on October 19, 2009. We also requested comments on the revised revision to our proposed critical habitat designation and associated draft economic analysis during a comment period that opened January 18, 2011, and closed on February 17, 2011. This public comment period was associated with the publication of the revised proposed rule in the **Federal Register** on January 18, 2011 (76 FR 2863). Lastly, we requested comments on a second revised proposed critical habitat designation during a comment period that opened June 21, 2011, and closed on July 5, 2011, and was associated with the publication of the second revised proposed rule in the **Federal Register** on June 21, 2011 (76 FR 36068). We did not receive any requests for a public hearing; however, we held a public informational meeting in Santa Rosa, California, on June 29, 2011. We contacted appropriate Federal, State, and local agencies; scientific organizations; tribes; and other interested parties and invited them to comment on the proposed rule and draft economic analysis during these comment periods.

During the first comment period, we received 53 comment letters directly addressing the proposed critical habitat designation. During the second comment period, we received 35 comment letters addressing either the proposed critical habitat designation or the draft economic analysis. During the third comment period, we received 8 comment letters addressing the critical habitat designation and economic analysis. These totals do not include duplicate submissions. All substantive information provided during these comment periods has either been incorporated directly into this final determination or is addressed below.

Peer Review

In accordance with our peer review policy published on July 1, 1994 (59 FR 34270), we solicited expert opinions from three knowledgeable individuals with scientific expertise that included familiarity with the species, the geographic region in which the species occurs, and conservation biology principles. We received a response from one peer reviewer.

We reviewed the comments received from the peer reviewer for substantive issues and new information regarding critical habitat for the Sonoma California tiger salamander. The peer reviewer generally concurred with our methods and conclusions and provided additional information with regard to known occurrences, clarifications, and suggestions to improve the final revised critical habitat rule, including suggestions about areas that the reviewer considered to be more important than others for critical habitat designation. The reviewer's comments are addressed in the following summary and incorporated into the final rule as appropriate.

Peer Reviewer Comments

Comment 1: The peer reviewer and other commenters noted that there are three known breeding sites in the Roblar Road area. The peer reviewer reviewed aerial photographs and performed reconnaissance visits to the area and observed several other potential breeding ponds in the vicinity of the Roblar Road breeding sites. The peer reviewer commented that the Roblar Road area likely consists of a metapopulation with multiple known breeding sites. The peer reviewer recommended that we include the area within a minimum of 1.3 miles (mi) (2 kilometers (km)) from each of the three Roblar breeding sites in designated critical habitat. The 1.3 mi area (2 km) is based on observations of California tiger salamanders from the nearest breeding ponds (Sweet 1998).

Our Response: In the June 21, 2011, revised proposed rule (76 FR 36068), we added 4,945 ac (2,001 ha) in the Roblar Road area to the revised critical habitat designation in response to the peer reviewer's recommendation that we include these recent breeding records, and we requested public comment on this addition to our revised proposal. The Roblar Road area supports the physical or biological features essential to the conservation of the species, is contiguous with habitat that was proposed as critical habitat in 2009 and 2011, and is within the geographical area that was considered occupied at the time of listing.

Comment 2: The peer reviewer noted that the northern extent of proposed critical habitat has no documented occurrences and includes the area from the Sonoma County airport to the Windsor area (north of Guerneville Road). Other commenters also stated that areas north of Santa Rosa Creek and Mark West Creek do not support the Sonoma California tiger salamander. These commenters stated that this area has little value for the recovery of the species due to past and current urbanization and fragmentation of habitat, and this area would not likely support viable populations of the Sonoma California tiger salamander.

Our Response: We revised the critical habitat designation boundary in this final revised rule to remove infill parcels (isolated parcels surrounded by developed areas) within the town of Windsor, the town of Windsor Sphere of Influence, infill parcels east of the Sonoma County airport, and parcels on the east side of U.S. Highway 101 and north of Mark West Creek. The infill parcels are highly fragmented, are not known to be occupied by the Sonoma California tiger salamander, do not contain the physical or biological features essential to the conservation of the species, are not needed for the survival or recovery of the species, and are not otherwise essential for the conservation of the species. The areas north of Guerneville Road retained in this final critical habitat designation have the physical or biological features essential to conserve the Sonoma California tiger salamander, although some areas that are managed for intense agricultural activities (*e.g.,* vineyards, row crops, orchards) may currently have only one primary constituent element (*e.g.,* dispersal habitat). They may be restored to high-quality Sonoma California tiger salamander habitat that would also provide breeding and suitable upland habitat, which could then contribute to the recovery of the species. Therefore, the retained areas are essential for the conservation of the species because they comprise large, contiguous habitat that provides upland dispersal areas for the Sonoma California tiger salamander, they contain at least one of the essential features, and they have the potential for restoration to high-quality habitat.

Comment 3: The peer reviewer suggested that critical habitat should be extended south to the Rainsville Road area. The peer reviewer stated that this southern area contains the primary constituent elements (seasonal wetlands for breeding and grasslands for terrestrial refugia and dispersal). The peer reviewer also noted that he has a reliable anecdotal observation by an amateur herpetologist of an adult

Sonoma California tiger salamander in the Rainsville Road area.

Our Response: The area south of Pepper Road including the Rainsville Road area, along both sides of U.S. Highway 101, was removed in the January 18, 2011, revised proposed rule and is not included in this final critical habitat rule because we do not currently consider this area to be essential to the conservation of the species. Although there is an anecdotal report from the 1990s of a Sonoma California tiger salamander observation along Rainsville Road, we are not aware of confirmed observations of the Sonoma California tiger salamander within this area. This area has been fragmented by industrial and residential development and roadways, including the major north-south highway, U.S. Highway 101. More than 20 percent of the land generally south of Pepper Road and west of U.S. Highway 101 is delineated as 100-year floodplain for the Petaluma River and generally bisects the Rainsville Road area. We generally do not consider lands within the 100-year floodplain to contain suitable breeding habitat for the Sonoma California tiger salamander, and the floodplain fragments the remaining undeveloped land in this area. We do not find the remaining upland habitat to be adjacent or within dispersal distance from breeding ponds nor to be dispersal habitat between locations occupied by the Sonoma California tiger salamander. Therefore, we do not find the Rainsville Road area to contain the PCEs necessary for the Sonoma California tiger salamander.

Comments From States

Section 4(i) of the Act states, ''the Secretary shall submit to the State agency a written justification for his failure to adopt regulations consistent with the agency's comments or petition.'' No comments were received from the State regarding the proposal to revise critical habitat for the Sonoma California tiger salamander.

Public Comments

Unit Designation

Comment 4: Several comments included specific recommendations about how the critical habitat unit should be delineated, including comments regarding specific areas that should be included or removed from the final revised designation.

Our Response: We used the best scientific information available in determining the extent of the critical habitat boundaries, and we revised our final rule based on peer review and public comments received. We mapped only those areas that contained the physical or biological features essential to conserve the Sonoma California tiger salamander. When determining critical habitat boundaries, we made every effort to avoid including developed areas such as buildings, paved areas, and other structures that lack the primary constituent elements for the Sonoma California tiger salamander. The scale of the maps prepared under the parameters for publication within the Code of Federal Regulations may not reflect the exclusion of such developed areas. Any such structures, and the land under them, that have been inadvertently left inside the critical habitat boundaries shown on the maps of this final rule, have been excluded by text in this rule, and are not designated as critical habitat. These developed and nonessential habitat areas do not contain the primary constituent elements and as such are not considered critical habitat. We did not exclude from critical habitat designation any areas based on the Conservation Strategy, because an implementation plan has not been completed by local governments and there are no regional Habitat Conservation Plans in this area.

Comment 5: Several comments pertained to areas on the east side of U.S Highway 101 and north of Mountain View Avenue. Commenters noted that critical habitat designation should exclude undeveloped or partially developed parcels that are completely or predominately surrounded by developed areas, because such isolated vacant 'infill' parcels lack the requisite primary constituent elements for the Sonoma California tiger salamander, such parcels cannot support the isolated self-sustaining populations, and the parcels are inaccessible to the Sonoma California tiger salamander attempting to disperse from other areas.

Our Response: The critical habitat designation no longer includes the urbanized centers of Santa Rosa, Windsor, Bennett Valley, Rohnert Park, and Cotati, including some areas on the east side of U.S. Highway 101. These urban centers consist almost exclusively of hardened, developed landscapes. The remnant open space within these areas is limited to small, isolated parcels within a matrix of urban development. We do not consider the remnant open space within these city centers as essential for the conservation of the Sonoma California tiger salamander because these areas would not likely contribute to the survival or recovery of the species.

Comment 6: One commenter requested that four properties located in the easterly portion of the City of Rohnert Park and the southeasterly portion of the County of Sonoma not be included in the final revised critical habitat designation based on past negative surveys for Sonoma California tiger salamander, e-mail communication from the Service confirming that proposed projects at these properties would not likely result in ''take'' of the Sonoma California tiger salamander, and information revealing that three of the properties are in the ''no effect'' category in the *Programmatic Biological Opinion for U.S. Army Corps of Engineers Permitted Projects that May Affect California Tiger Salamander and Three Endangered Plant Species on the Santa Rosa Plain, California,* 2007 (Programmatic Biological Opinion).

Our Response: The final revised critical habitat designation does not include the properties located in the easterly portion of the City of Rohnert Park and the southeasterly portion of the County of Sonoma, based on existing habitat conditions, fragmentation, and isolation. We determined that the area does not contain the physical or biological features and is not essential for the conservation of the species. For these reasons, the critical habitat unit boundary has been revised in this final revised designation to remove the general area south of the intersection of Martinez Drive and Petaluma Hill Road and south of Gladstone Way, Rohnert Park, California, and north of Roberts Ranch Road.

Comment 7: One commenter recommended that major water courses and areas within the 100-year floodplain should not be excluded from the revised critical habitat designation without a better understanding of the function and values of the 100-year floodplain to the Sonoma California tiger salamander.

Our Response: The 100-year floodplain does not likely support Sonoma California tiger salamander breeding because seasonal pools within the 100-year floodplain are subject to flooding from perennial sources (such as the Laguna de Santa Rosa wetlands), and the pools within the floodplain support predators of Sonoma California tiger salamander. Periodically flooded uplands within the 100-year floodplain may be considered Sonoma California tiger salamander habitat if located near predator-free breeding pools (Conservation Strategy Team 2005a, Appendix E). However, Sonoma California tiger salamander occurrence information from the California Natural Diversity Database (CNDDB) (2010) indicates that, despite intensive focus on the Sonoma California tiger salamander, to date no occurrences have

been identified within the 100-year floodplain. The Conservation Strategy notes the reason that this species has not been located within the floodplain may be due to the lack of suitable upland habitat within the floodplain during the wet season (Conservation Strategy Team 2005b, Appendix L). However, some areas of the 100-year floodplain have been included as critical habitat in this final rule in order to maintain connectivity between breeding locations, and these areas are important for dispersal in some locations. The Service, therefore, has determined that most of the 100-year floodplain lacks the physical and biological features that are essential to the conservation of the Sonoma California tiger salamander, and the areas themselves are not considered essential to the conservation of the species. However, the 100-year floodplain areas may provide some benefits for connectivity, dispersal, foraging, and cover for the Sonoma California tiger salamander when the area is not flooded.

Comment 8: Several commenters stated that areas north of Santa Rosa Creek or north of Mark West Creek are inappropriate and not likely essential for designation of critical habitat based on the following:

(1) Sonoma California tiger salamanders have not been observed north of Mark West Creek. Mark West Creek is a geographic barrier between areas populated by the Sonoma California tiger salamander, and the only breeding site north of Santa Rosa Creek is a transplanted breeding site (*i.e.,* Alton Lane Mitigation Site), and

(2) These areas are not adequate to serve as Sonoma California tiger salamander mitigation habitat based on the Programmatic Biological Opinion and Conservation Strategy.

Our Response: In areas occupied at the time of listing, the designation of critical habitat is based on an evaluation of areas that contain the physical or biological features essential to the conservation of the Sonoma California tiger salamander. The Service is not aware of information that demonstrates that Mark West Creek is a geographic barrier to Sonoma California tiger salamander movement or information demonstrating that Sonoma California tiger salamanders do not or could not occupy areas north of Mark West Creek. The Programmatic Biological Opinion and the Conservation Strategy identify areas north of Mark West Creek as supporting potential habitat for the Sonoma California tiger salamander. A portion of the area north of Mark West Creek is included as revised critical habitat in this final rule. This area is generally located west of Windsor Road, south of Shiloh Road, east of the 100-year floodplain and north of Mark West Creek. Specific infill parcels within the town of Windsor, east of the Sonoma County Airport, and parcels on the east side of U.S. Highway 101 north of Mark West Creek are not included in the final revised designation.

Comment 9: A commenter requested that Santa Rosa City Farm lands not be excluded from revised critical habitat based on the importance of the lands to the recovery of the Sonoma California tiger salamander. Another commenter requested that the Santa Rosa City Farm lands be excluded from the designation.

Our Response: The Santa Rosa City Farms were not excluded from revised critical habitat. Currently, known breeding occurs immediately adjacent to, and some known breeding occurs within, the Santa Rosa City Farm lands, making this an important area for restoration. We believe the Santa Rosa City Farm lands are important to the survival and recovery of the Sonoma California tiger salamander, and meet the criteria for and definition of critical habitat for this species. Restoration of the Santa Rosa City Farm lands and compatible land use may provide exceptional opportunities for the Sonoma California tiger salamander (which exhibits metapopulation characteristics) to be less susceptible to local extirpation. Because the Santa Rosa City Farm lands are contiguous to some of the largest known concentrations of Sonoma California tiger salamanders, there may exist opportunities for the Sonoma California tiger salamander to recover from land uses that are incompatible with the natural history of the species.

Comment 10: A commenter requested that the 75-ac (30-ha) parcel located within the City of Rohnert Park known as Sonoma Mountain Village (an area comprised of the former Hewlett Packard/Agilent Technology Campus) be removed from critical habitat designation. The commenter stated that the 75-ac (30-ha) parcel is frequently disturbed by regular farming activities, such as frequent discing, which the commenter noted precludes burrows and crevices necessary for Sonoma California tiger salamander aestivation. The commenter stated that frequent disturbances and the removal of cover turn the farmed area into poor upland habitat for the Sonoma California tiger salamander. The commenter also stated that the 75-ac (30-ha) parcel drains quickly and has no identified wetland areas suitable for Sonoma California tiger salamander breeding.

Our Response: The 75 ac (30 ha) of land known as Sonoma Mountain Village within the City of Rohnert Park, an area comprised of the former Hewlett Packard/Agilent Technology Campus, was surveyed for Sonoma California tiger salamanders in 2005. Adult Sonoma California tiger salamanders were captured. The site, although disturbed by farming and discing activities, is less than 0.5 mi (0.8 km) from known breeding habitat, supports upland habitat and upland dispersal habitat for Sonoma California tiger salamanders, and meets the criteria for and definition of critical habitat for this species.

Comment 11: One commenter requested that we work with the Federated Indians of Graton Rancheria (Tribe) in furtherance of the government-to-government relationship between the Tribe and the United States. The commenter further requested that we allow the Tribe to manage approximately 252 ac (102 ha) of reservation lands created on October 1, 2010, under a tribal management plan, rather than include the lands within designated critical habitat. The commenter noted that a 66-ac (27-ha) portion of the reservation will be developed as a resort hotel and casino, and that the development project has been addressed through an Environmental Impact Statement and associated Record of Decision. The commenter also noted that the National Indian Gaming Commission has completed consultation on the project with the Service, resulting in a completed Biological Opinion on the project. The commenter indicated that the Tribe is in the process of completing the tribal management plan.

Our Response: As part of our Federal responsibilities under the President's memorandum of April 29, 1994 (Government-to-Government Relations with Native American Tribal Governments; 59 FR 22951), Executive Order 13175 (Consultation and Coordination With Indian Tribal Governments), Secretarial Order 3206 of June 5, 1997 (American Indian Tribal Rights, Federal-Tribal Trust Responsibilities, and the Endangered Species Act), and the Department of the Interior's manual at 512 DM 2, we readily acknowledge our responsibility to communicate meaningfully with recognized Federal Tribes on a government-to-government basis. We have worked with the Federated Indians of Graton Rancheria in regards to this designation of revised critical habitat and to further government-to-government relationships. We consulted with the National Indian Gaming

Commission (Commission) in 2009 for the proposed Graton Rancheria Casino and Hotel Project, City of Rohnert Park, Sonoma County, California and issued a biological opinion to the Commission (File Number 81420–2009–F–0336).

The proposed project entails 82 ac (33 ha) of a casino-hotel development, 170 ac (69 ha) of recycled water sprayfields, flood storage ponds, and open space. Approximately 87 ac (35 ha) are to be conserved off-site to benefit the Sonoma California tiger salamander. The 87 ac (35 ha) of off-site conservation is based on mitigation ratios described in the Conservation Strategy. The 87 ac (35 ha) consist of purchasing Sonoma California tiger salamander credits at a mitigation bank, or the purchase of land providing suitable habitat where Sonoma California tiger salamanders are known to occur, and protecting the land with a conservation easement. The establishment of an off-site preserve by the applicant, if chosen, must meet additional requirements as described in the biological opinion, such as third party management pursuant to a Service-approved resource management plan, performance monitoring, maintenance monitoring, compliance reporting, adaptive management planning, and a funding mechanism to assure long-term management and monitoring. The proposed action also includes development of a management plan for the 170 ac (69 ha) except those portions planned for use as treated wastewater retention ponds.

The Tribe has developed and finalized a management plan that provides for the long-term protection of species through adaptive management measures that preferentially conserve rare habitats and habitats known or likely to be occupied by the threatened and endangered species known to occur in the Santa Rosa Plain wetland or vernal pool habitats, including the Sonoma California tiger salamander. The Service reviewed the management plan and agrees that it provides for the conservation of the Sonoma California tiger salamander. We have determined that the benefits of exclusion under section 4(b)(2) of the Act exceed the benefits of including these lands within the critical habitat designation, and the Secretary has exercised his discretion to exclude approximately 252 ac (102 ha) of Graton Rancheria trust lands under section 4(b)(2) of the Act. See the Exclusions section below for more information regarding exclusion of these tribal lands.

Comment 12: One commenter noted that Secretarial Order 3206 involving American Indian Tribal Rights, Federal-Tribal Trust Responsibilities, and the Endangered Species Act, does not require the exclusion of tribal trust lands from critical habitat designation. The commenter noted that the Secretarial Order requires the Service to recognize ''the contribution to be made by affected Indian tribes, throughout the process and prior to finalization and close of the public comment period, in the review of proposals to designate critical habitat and evaluate economic impacts of such proposals with implications for tribal trust resources or the exercise of tribal rights'' (Secretarial Order 3206, Sec. 3(B)(3)). Further, the commenter noted that the Secretarial Order provides that the Service ''shall evaluate and document the extent to which the conservation needs of the listed species can be achieved by limiting the designation to other lands'' (Secretarial Order 3206, Sec. 3(B)(4)).

Our Response: The commenter is correct in his description of Secretarial Order 3206. It further states that ''Critical habitat shall not be designated in such areas unless it is determined essential to the conservation of the species.'' (Secretarial Order 3206, Sec. 3(B)(4)) We have determined that the tribal trust lands are occupied with the physical or biological features essential to the conservation of the species. Therefore, we considered exclusion of tribal trust lands under section 4(b)(2) of the Act. As noted in our response to Comment 11 above, we are excluding approximately 252 ac (102 ha) of tribal trust lands under section 4(b)(2) of the Act from this final designation because we received a management plan that provides protection for the physical and biological features essential to the conservation of the Sonoma California tiger salamander, and because we have determined that the benefits of exclusion outweigh the benefits of inclusion for this parcel. See the Exclusions section of this final rule for more information.

Comment 13: One commenter noted that the Roblar Road area is in the Americano Estero watershed, while most of the proposed critical habitat is in the Santa Rosa Plain. The commenter suggested that any impacts to tiger salamanders in the Americano Estero watershed should be mitigated within the same watershed. The commenter also provided some information regarding the proposed development of a rock quarry in the area.

Our Response: Designation of critical habitat identifies the physical or biological features essential to the conservation of the species and does not evaluate impacts or suggest mitigation for specific projects. Under Section 7 or 10 of the Act, projects are evaluated on an individual basis, and mitigation may occur if there are anticipated adverse effects of the project. The mitigation location is usually evaluated and determined on a case by case basis, however it is possible for mitigation to occur in a different watershed within the range of the Sonoma California tiger salamander.

Comment 14: One commenter requested that the Service review the location of the critical habitat boundary on the east side of U.S. Highway 101 in the vicinity of Cotati, Highway 116, Old Redwood Highway and Commerce Avenue, and consider using U.S. Highway 101 as the actual boundary due to the fact that the area currently included in the proposed critical habitat unit is a very small area that seems to be developed on all sides.

Our Response: The Service reviewed the area described, using aerial photography and available survey information. One or more primary constituent elements and confirmed observations of the Sonoma California tiger salamander occur within the area in question. For these reasons, we have determined that the area meets the definition of critical habitat for the California tiger salamander and should remain in this final revised designation.

Economic Analysis

Comment 15: One comment states that the draft economic analysis (DEA) is inadequate because it acknowledges that ''significant uncertainty exists'' over whether measures to avoid jeopardy of the species will also avoid adverse modification of critical habitat, but fails to quantify costs associated with measures recommended specifically to avoid adverse modification.

Our Response: The economic analysis focuses on estimating impacts to economic activities that are reasonably foreseeable. Given (a) The significant uncertainty regarding the types of projects that may lead to an adverse modification finding in the future and the conservation measures that may be requested to avoid adverse modification, and (b) the lack of precedent for the Service to request additional conservation measures to avoid jeopardy; the final economic analysis (FEA) does not forecast incremental impact stemming from conservation measures implemented to avoid adverse modification of critical habitat. The FEA acknowledges this uncertainty and explains why no incremental impacts are forecast in multiple places, including the ''Key Sources of Uncertainty'' section of the Executive Summary. A detailed description of

how the FEA estimates incremental impacts is presented in Section 3.3.

Comment 16: A number of comments state that the DEA is flawed because it fails to quantify costs associated with the designation such as costs of surveying for the salamander and purchasing mitigation credits.

Our Response: In areas where surveying occurs, the FEA considers the cost of surveying to be a baseline impact. Baseline impacts stem from protections afforded the species absent critical habitat. The methodology used to separately identify baseline and incremental impacts is discussed in Section 2.3 of the FEA. Language has been added to Section 2.3 of the FEA to clarify where surveying occurs and why the cost of surveying is considered a baseline impact. Similarly, the cost of purchasing mitigation credits is considered a baseline impact. Baseline impacts specific to development activities are discussed in detail in Section 3.2. Section 3.2 notes that a discussion of mitigation requirements is included ''only to provide a qualitative description of potential baseline impacts of CTS conservation.''

Comment 17: One comment states that critical habitat designation could delay a planned development project, potentially making it unviable. If the project does not move forward, jobs could be lost, and the City's ability to meet future housing obligations under the Regional Housing Needs Assessment could be compromised.

Our Response: As shown in Exhibit 2–2, the FEA assumes that critical habitat may result in additional administrative effort, such as staff time and costs, to address adverse modification in section 7 consultations. Depending on the type of section 7 consultation, the direct cost of this additional administrative effort for each consultation is expected to range from $405 to $9,025. As such, the analysis attempts to capture the increased costs associated with the increased complexity of consultations following critical habitat designation. While time delay associated with the need to consult can be considered an indirect, incremental impact of the designation, it is unlikely that the additional administrative effort required due to critical habitat designation would result in a measureable delay or cause a project to become unviable.

Comment 18: One comment states that the DEA makes no effort to describe the revenue or income profile of small building construction companies that may be affected by the critical habitat designation. The commenter suggests that the small business analysis (Appendix A) be revised to include a comparison between the estimated costs of critical habitat designation and the approximate income or revenue of small building construction companies.

Our Response: Appendix A of the FEA has been revised to include a comparison between the estimated incremental impact to building construction companies and a range of average revenues for small building construction entities from the Risk Management Association. These data from the Risk Management Association are not available at the county-level, so national data are used. This analysis finds that if all incremental impacts to construction companies are borne by a single small construction company, the estimated annualized impacts would represent, on average, between 0.04 percent and 1.27 percent of annual revenues.

Comment 19: One comment states that the DEA only identifies building construction companies as small businesses that may experience significant economic impacts. The commenter points out that other industries, such as the vineyard and wine industry, could be significantly affected by the proposed rule.

Our Response: Appendix A of the FEA explains that incremental impacts to the transportation industry are forecast to be incurred by CALTRANS, a State agency that does not meet the definition of a small business. Similarly, incremental impacts to utilities are limited to the administrative cost of an intra-Service consultation that is borne solely by the Service. Potential impacts to other activities including agriculture and mitigation bank establishment are discussed in Chapter 4 of the FEA. No incremental impacts to these activities are forecast; therefore, small businesses in these industries are not expected to be affected. In particular, the section 7 consultation history contains no past consultations on agricultural conversion projects, such as vineyard conversion. Further, communications with the U.S. Army Corps Regulatory Division indicate that no section 404 permit requests for agricultural conversion projects have occurred in the recent past within the study area. Given the lack of precedent for an agricultural wetland conversion project, this analysis does not estimate the number of future agricultural wetland conversion projects or the incremental impacts stemming from the additional administrative cost of addressing adverse modification during section 7 consultation for such projects. A discussion of impacts to small businesses in the agriculture and mitigation bank establishment industries has been added to Appendix A of the FEA.

Summary of Changes From the 2009 Proposed Rule

The following paragraphs provide specific information on the changes between the 2009 proposed rule and this final revised designation. First, we describe the changes that were made between the 2009 proposed rule (74 FR 41662) and the January 18, 2011, revised proposed rule (76 FR 2863). In the 2011 revision, we refined our critical habitat proposal to better reflect the occupied and potential range of the species as suggested in the Conservation Strategy mapping criteria (Conservation Strategy Team 2005a, Appendix E) and the Programmatic Biological Opinion. We also added area in the vicinity of Lichau Creek and Railroad Avenue, in the southernmost region of the Santa Rosa Plain, to reflect new information on the presence of Sonoma California tiger salamander breeding within the area.

Other areas that were removed in the revised proposed rule include the urbanized centers of Santa Rosa, Bennett Valley, Rohnert Park, and Cotati. These urban centers consist almost exclusively of hardened, developed landscapes. The remnant natural habitat within these areas is limited to small, isolated parcels within a matrix of urban development. These areas are not included in the final rule because developed areas (lands covered by buildings, pavement, and other structures) lack the physical or biological features essential to the conservation of the species, according to section 3(5)(A) of the Act. We also do not consider the remnant open space within these city centers as essential for the conservation of the Sonoma California tiger salamander.

Most of the Laguna de Santa Rosa 100-year floodplain was removed in the revised proposed rule and is not included in this final revised designation, because we do not consider the area essential to the conservation of the species. In the Santa Rosa Plain area, the Federal Emergency Management Agency (FEMA) 100-year floodplain is generally not believed to support Sonoma California tiger salamander breeding because seasonal pools within the 100-year floodplain are subject to flooding from perennial sources (such as the Laguna de Santa Rosa), which leads to a high likelihood that pools within the floodplain will support Sonoma California tiger salamander predators. However, periodically flooded uplands within the 100-year floodplain may be considered Sonoma California tiger salamander habitat if these pools are

located near predator-free breeding pools (Conservation Strategy 2005a, Appendix E). Occurrence information from the California Natural Diversity Database (CNDDB) (2010) indicates that, despite intensive focus on the Sonoma California tiger salamander to date, no occurrences have been identified within the 100-year floodplain. The fact that this species has not been located within the floodplain may be due to the lack of suitable upland habitat within the floodplain during the wet season (Conservation Strategy Team 2005b, Appendix L). We, therefore, have determined that most of the 100-year floodplain lacks the physical and biological features essential to the conservation of the Sonoma California tiger salamander and, therefore, does not meet the definition of critical habitat.

As noted above, the bulk of the floodplain is not included in this final critical habitat rule. A segment of the 100-year floodplain that is located between the Stony Point Conservation Area (near Wilfred Avenue) and the Northwest Cotati Conservation Area (near Nahmens Road) is retained within the critical habitat to reduce fragmentation of the northern and southern breeding concentrations within the unit by allowing for potential dispersal and genetic exchange. This retained segment is further bounded by Llano Road on the west and the western edge of the urban growth boundary of Cotati, California (near the northern terminus of Helman Lane), on the east.

Additionally, in the January 18, 2011, revised proposed rule we removed several areas of small remnant open parcels that occur between the eastern periphery of suburban Sebastopol and the western edge of the 100-year floodplain. These areas are not included in the final revised designation. We do not consider these areas essential to the conservation of the species because the undeveloped lands are small in size, are isolated from each other by development, are isolated from breeding habitat on the eastern side of the floodplain by the 100-year floodplain and the Laguna de Santa Rosa, and are not known to be occupied or contain the physical or biological features.

The area south of Pepper Road including the Rainsville Road area, along both sides of U.S. Highway 101, was removed in the January 18, 2011, revised proposed rule and is not included in this final critical habitat rule because we do not currently consider this area to be essential to the conservation of the species. This area has been fragmented by industrial and residential development and roadways, including the major north-south highway, U.S. Highway 101. More than 20 percent of the land generally south of Pepper Road and west of U.S. Highway 101 is delineated as 100-year floodplain for the Petaluma River. We generally do not consider lands within the 100-year floodplain to contain suitable breeding habitat for the Sonoma California tiger salamander, and the floodplain fragments the remaining undeveloped land in this area. Although there is an anecdotal report from the 1990s of a Sonoma California tiger salamander observation along Rainsville Road, we are not aware of confirmed observations of the Sonoma California tiger salamander within this area.

On June 21, 2011 (76 FR 36068), we published an additional revised proposed rule to include 4,945 ac (2,001 ha) located in the general area of Roblar Road in the proposed critical habitat unit. This addition to the proposed critical habitat unit is within the area that was considered occupied at the time of listing. We added the Roblar Road area to the proposed designation and include it in the final designation, based on information we received during the public review process. Additional information used to determine the boundaries of the addition included aerial photographs, reconnaissance visits to the area, and observations of Sonoma California tiger salamander habitat.

Refinements that we've made to the proposed designation in this final rule to designate critical habitat include the removal of infill parcels within the town of Windsor and the town of Windsor Sphere of Influence, infill parcels east of the Sonoma County airport, and parcels on the east side of U.S. Highway 101 north of Mark West Creek. The removed parcels are highly fragmented by urban development, are not known to be occupied, do not contain the physical or biological features or is otherwise essential for the conservation of the species, and are not essential to the survival or recovery of the Sonoma California tiger salamander. A sliver of the eastern edge of the proposed critical habitat that is east of U.S. Highway 101 between Mark West Creek and the City of Santa Rosa has also been eliminated from this final designation. We do not consider this area essential to the conservation of the Sonoma California tiger salamander because it is a long linear strip of land confined by development, and is isolated from other areas containing the physical or biological features essential to the conservation of the species by a major four-lane highway that would be a significant barrier to dispersal.

Lastly, this final revised rule does not include the area east of Rohnert Park. We have determined that, even though the area contains some of the physical and biological features, this area is not essential to the conservation of the Sonoma California tiger salamander because this area is not known to be occupied and existing habitats are fragmented and isolated. We have concluded that the area east of Rohnert Park is not essential to the survival or recovery of the species. For these reasons, the critical habitat unit boundary is revised in this final designation to remove the area that is east of Rohnert Park, generally south of the line that extends from the northeastern edge of the City of Rohnert Park (in the immediate vicinity of Gladstone Way), through the intersection of Martinez Drive and Petaluma Hill Road, and generally north of Roberts Ranch Road.

Critical Habitat

Background

Critical habitat is defined in section 3 of the Act as:

(1) The specific areas within the geographical area occupied by the species, at the time it is listed in accordance with the Act, on which are found those physical or biological features:

(a) Essential to the conservation of the species and

(b) Which may require special management considerations or protection; and

(2) Specific areas outside the geographical area occupied by the species at the time it is listed, upon a determination that such areas are essential for the conservation of the species.

Conservation, as defined under section 3 of the Act, means to use and the use of all methods and procedures that are necessary to bring an endangered or threatened species to the point at which the measures provided pursuant to the Act are no longer necessary. Such methods and procedures include, but are not limited to, all activities associated with scientific resources management such as research, census, law enforcement, habitat acquisition and maintenance, propagation, live trapping, and transplantation, and, in the extraordinary case where population pressures within a given ecosystem cannot be otherwise relieved, may include regulated taking.

Critical habitat receives protection under section 7 of the Act through the requirement that Federal agencies

ensure, in consultation with the Service, that any action they authorize, fund, or carry out is not likely to result in the destruction or adverse modification of critical habitat. The designation of critical habitat does not affect land ownership or establish a refuge, wilderness, reserve, preserve, or other conservation area. Such designation does not allow the government or public to access private lands. Such designation does not require implementation of restoration, recovery, or enhancement measures by non-Federal landowners. Where a landowner seeks or requests Federal agency funding or authorization for an action that may affect a listed species or critical habitat, the consultation requirements of section 7(a)(2) of the Act would apply, but even in the event of a destruction or adverse modification finding, the obligation of the Federal action agency and the landowner is not to restore or recover the species, but to implement reasonable and prudent alternatives to avoid destruction or adverse modification of critical habitat.

For inclusion in a critical habitat designation, the habitat within the geographical area occupied by the species at the time it was listed must contain physical and biological features which are essential to the conservation of the species and which may require special management considerations or protection. Critical habitat designations identify, to the extent known using the best scientific and commercial data available, those physical and biological features that are essential to the conservation of the species (such as space, food, cover, and protected habitat), focusing on the principal biological or physical constituent elements (primary constituent elements) within an area that are essential to the conservation of the species (such as roost sites, nesting grounds, seasonal wetlands, water quality, tide, soil type). We consider primary constituent elements to be the elements of physical and biological features within the species range that are essential to the conservation of the species. In the case of the Sonoma California tiger salamander, the primary constituent elements include those specific aquatic and upland habitats determined through use of our methodology and criteria as discussed below.

Under the Act, we can designate critical habitat in areas outside the geographical area occupied by the species at the time it is listed, upon a determination that such areas are essential for the conservation of the species. We designate critical habitat in areas outside the geographical area occupied by a species only when a designation limited to its present range would be inadequate to ensure the conservation of the species. When the best available scientific data do not demonstrate that the conservation needs of the species require such additional areas, we will not designate critical habitat in areas outside the geographical area occupied by the species. An area currently occupied by the species but that was not occupied at the time of listing may, however, be essential to the conservation of the species and may be included in the critical habitat designation.

Section 4 of the Act requires that we designate critical habitat on the basis of the best scientific and commercial data available. Further, our Policy on Information Standards Under the Endangered Species Act (published in the **Federal Register** on July 1, 1994 (59 FR 34271)), the Information Quality Act (section 515 of the Treasury and General Government Appropriations Act for Fiscal Year 2001 (Pub. L. 106–554; H.R. 5658)), and our associated Information Quality Guidelines, provide criteria, establish procedures, and provide guidance to ensure that our decisions are based on the best scientific data available. They require our biologists, to the extent consistent with the Act and with the use of the best scientific data available, to use primary and original sources of information as the basis for recommendations to designate critical habitat.

When we are determining which areas should be designated as critical habitat, our primary source of information is generally the information developed during the listing process for the species. Additional information sources may include the recovery plan for the species, articles in peer-reviewed journals, conservation plans developed by States and counties, scientific status surveys and studies, biological assessments, or other unpublished materials and expert opinion or personal knowledge.

Habitat is dynamic, and species may move from one area to another over time. Climate change will be a particular challenge for biodiversity because the interaction of additional stressors associated with climate change and current stressors may push species beyond their ability to survive (Lovejoy 2005, pp. 325–326). The synergistic implications of climate change and habitat fragmentation are the most threatening facet of climate change for biodiversity (Hannah *et al.* 2005, p. 4). Current climate change predictions for terrestrial areas in the Northern Hemisphere indicate warmer air temperatures, more intense precipitation events, and increased summer continental drying (Field *et al.* 1999, pp. 1–3; Hayhoe *et al.* 2004, p. 12422; Cayan *et al.* 2005, p. 6; Intergovernmental Panel on Climate Change (IPCC) 2007, p. 1181). Climate change may lead to increased frequency and duration of severe storms and droughts (Golladay *et al.* 2004, p. 504; McLaughlin *et al.* 2002, p. 6074; Cook *et al.* 2004, p. 1015).

The information currently available on the effects of global climate change and increasing temperatures does not make sufficiently precise estimates of the location and magnitude of the effects. Nor are we currently aware of any climate change information specific to the habitat of the Sonoma California tiger salamander that would indicate what areas may become important to the species in the future. Therefore, we are unable to determine what additional areas, if any, may be appropriate to include in the final critical habitat for this species to address the effects of climate change.

We recognize that critical habitat designated at a particular point in time may not include all of the habitat areas that we may later determine are necessary for the recovery of the species. For these reasons, a critical habitat designation does not signal that habitat outside the designated area is unimportant or may not be required for recovery of the species. Areas that are important to the conservation of the species, both inside and outside the critical habitat designation, will continue to be subject to: (1) Conservation actions implemented under section 7(a)(1) of the Act, (2) regulatory protections afforded by the requirement in section 7(a)(2) of the Act for Federal agencies to insure their actions are not likely to jeopardize the continued existence of any endangered or threatened species, and (3) the prohibitions of section 9 of the Act if actions occurring in these areas may affect the species. Federally funded or permitted projects affecting listed species outside their designated critical habitat areas may still result in jeopardy findings in some cases. These protections and conservation tools will continue to contribute to recovery of this species. Similarly, critical habitat designations made on the basis of the best available information at the time of designation will not control the direction and substance of future recovery plans, habitat conservation plans (HCPs), or other species conservation planning efforts if new information available at the time of

these planning efforts calls for a different outcome.

Physical and Biological Features

In accordance with section 3(5)(A)(i) and 4(b)(1)(A) of the Act and regulations at 50 CFR 424.12, in determining which areas within the geographical area occupied at the time of listing to designate as critical habitat, we consider the physical and biological features essential to the conservation of the species and which may require special management considerations or protection. These include, but are not limited to:

(1) Space for individual and population growth and for normal behavior;

(2) Food, water, air, light, minerals, or other nutritional or physiological requirements;

(3) Cover or shelter;

(4) Sites for breeding, reproduction, or rearing (or development) of offspring; and

(5) Habitats that are protected from disturbance or are representative of the historical, geographical, and ecological distributions of a species.

We derive the specific physical and biological features required for the Sonoma California tiger salamander from studies of this species' habitat, ecology, and life history as described in the Critical Habitat section of the proposed rule to designate critical habitat published in the **Federal Register** on August 18, 2009 (74 FR 41662), and in the information presented below. Additional information can be found in the final listing rule published in the **Federal Register** on March 19, 2003 (68 FR 13498). We have determined that the Sonoma California tiger salamander requires the following physical and biological features.

The physical and biological features for the Sonoma population include:

1. Aquatic habitat;
2. Upland nonbreeding habitat with underground refugia; and
3. Dispersal habitat connecting occupied Sonoma California tiger salamander locations.

Aquatic Habitat

Standing bodies of fresh water (including natural and manmade (*e.g.,* stock) ponds, vernal pools, and other ephemeral or permanent water bodies) that typically support inundation during winter rains and hold water for a minimum of 12 consecutive weeks in a year of average rainfall, are features that are essential for population breeding and for providing space, food, and cover necessary to sustain early life-history stages of larval and juvenile Sonoma California tiger salamanders. The 12 consecutive-week time frame includes the onset of winter rains that initially fill pools or ponds and signal to adults to move to these areas for breeding. Spring rains maintain pool inundation, allowing larvae the time in the water that is needed to grow into metamorphosed juveniles so that they can then become capable of surviving in upland habitats. During periods of drought or less-than-average rainfall, these sites may not hold water long enough for individuals to complete metamorphosis; however, these sites still meet the definition of critical habitat for the species because they constitute breeding habitat in years of average rainfall. Without areas that have these essential features, the Sonoma California tiger salamander would not survive, continue to reproduce, and develop juveniles that grow into adult salamanders to complete their life cycles.

Upland Nonbreeding Habitat With Underground Refugia

Upland habitats containing underground refugia have features that are essential for the survival of adult salamanders and juvenile salamanders that have recently undergone metamorphosis. Adult and juvenile Sonoma California tiger salamanders are primarily terrestrial. Adult Sonoma California tiger salamanders enter aquatic habitats only for relatively short periods of time to breed. For the majority of their life cycle, Sonoma California tiger salamanders depend on upland habitats containing underground refugia in the form of small mammal burrows or other underground structures for their survival. These burrows provide protection from the hot, dry weather typical of California in the nonbreeding season. Sonoma California tiger salamanders also find food in these refugia and rely on them for protection from predators. The presence of small burrowing mammal populations is a key element for the survival of Sonoma California tiger salamanders, because the small mammals construct burrows that are then used by Sonoma California tiger salamanders. Because Sonoma California tiger salamanders do not construct burrows of their own, without the continuing presence of small mammal burrows in upland habitats, Sonoma California tiger salamanders would not be able to survive.

Dispersal Habitat Connecting Occupied Sonoma California Tiger Salamander Locations

Dispersal habitat for this species is upland area adjacent to aquatic habitats, which provides connectivity among suitable Sonoma California tiger salamander aquatic breeding and upland nonbreeding habitats. Even though Sonoma California tiger salamanders can bypass many obstacles and do not require a particular type of habitat for dispersal, the areas connecting habitats with the essential aquatic and upland features need to be accessible (no physical or biological attributes that prevent access to adjacent areas) to function effectively as dispersal habitat. Agricultural lands, such as row crops, orchards, vineyards, and pastures, do not constitute barriers to the dispersal of Sonoma California tiger salamanders; however, a busy highway or freeway may constitute a barrier. The extent to which any attribute is a barrier is a function of the specific geography of the area and the extent to which the attribute limits salamander access to suitable aquatic and upland habitat.

Dispersal habitat is needed for the conservation of the Sonoma California tiger salamander. Protecting the ability of Sonoma California tiger salamanders to move freely across the landscape in search of suitable aquatic and upland habitats is essential for maintaining gene flow and for recolonization of sites where Sonoma California tiger salamanders may have become temporarily extirpated. Lifetime reproductive success for the California tiger salamander and other tiger salamanders may be naturally low. Trenham *et al.* (2000, p. 372) found that the average female bred 1.4 times over her lifetime and produced 8.5 young that survived to metamorphosis, per reproductive effort. This reproduction results in approximately 12 metamorphic offspring over the lifetime of a female. In part, this low reproductive rate may be due to the extended time that it takes California tiger salamanders to reach sexual maturity; most do not breed until 4 or 5 years of age. While individuals may survive for more than 10 years, it appears that many individuals breed only once in their lifetime. This presumed low breeding rate combined with a hypothesized low survivorship of metamorphosed individuals, indicate that reproductive output may be only barely sufficient to maintain populations of California tiger salamanders.

Dispersal habitats help to preserve the population structure of the Sonoma California tiger salamander. The life history and ecology of the Sonoma California tiger salamander indicate that it is likely that this species has a metapopulation structure. A metapopulation is a set of populations within an area that are linked by immigration and emigration. Migration from one local occurrence or breeding site to other areas containing suitable habitat is possible, but may not be routine (Trenham 1998, p. 42; Trenham *et al.* 2001, p. 3519). Movement (dispersal) between areas containing suitable upland and aquatic habitats may be restricted due to inhospitable conditions around and between areas of suitable habitats. Because many of the areas of suitable habitat may be small and support small numbers of salamanders, local extirpation in these small areas may be common. The persistence of a metapopulation depends on the combined dynamics of local extinctions and the subsequent recolonization of areas through dispersal (Hanski and Gilpin 1991, pp. 7–9; Hanski 1994, p. 151).

Primary Constituent Elements for the Sonoma California Tiger Salamander

Under the Act and its implementing regulations, we are required to identify the physical and biological features essential to the conservation of Sonoma California tiger salamanders in areas occupied at the time of listing, focusing on the features' primary constituent elements. We consider primary constituent elements (PCEs) to be the elements of physical and biological features that provide for the species' life-history processes and are essential to the conservation of the species.

Based on our current knowledge of the physical or biological features and habitat characteristics required to sustain the species' life-history processes, we determine that the PCEs specific to Sonoma California tiger salamanders are:

(1) Standing bodies of fresh water (including natural and manmade (*e.g.,* stock) ponds, vernal pools, and other ephemeral or permanent water bodies) that typically support inundation during winter and early spring, and hold water for a minimum of 12 consecutive weeks in a year of average rainfall.

(2) Upland habitats adjacent to and accessible from breeding ponds that contain small mammal burrows or other underground refugia that the species depends upon for food, shelter, and protection from the elements and predation.

(3) Accessible upland dispersal habitat between locations occupied by the species that allow for movement between such sites.

With this designation of critical habitat, we intend to identify the physical and biological features essential to the conservation of the species, through the identification of the primary constituent elements on the landscape sufficient to support the life-history processes of the species. The specific area designated as critical habitat in this final designation is currently occupied by the Sonoma California tiger salamander and contains the physical and biological features essential to the conservation of the species.

Special Management Considerations or Protection

When designating critical habitat, we assess whether the specific areas within the geographical area occupied by the species at the time of listing contain the features that are essential to the conservation of the species and which may require special management considerations or protection. Within the single unit proposed as critical habitat in this final designation, we find that the features essential to the conservation of the Sonoma California tiger salamander may require special management considerations or protection to ameliorate the threats outlined below:

1. Activities that would threaten the suitability of Sonoma California tiger salamander breeding ponds, such as introduction of nonnative predators, including nonnative bullfrogs and nonnative fish;

2. Activities that could disturb or disrupt the hydrology of aquatic breeding habitat, such as heavy equipment operation (*e.g.,* bulldozers or deep ripping), ground disturbance (*e.g.,* discing), maintenance projects (*e.g.,* pipelines, roads, power lines), land conversion to vineyards, off-road travel, or recreation;

3. Activities that impair the water quality of aquatic breeding habitat (*e.g.,* pesticides, increased nitrogen input through recycled water or dairy operations);

4. Activities that would reduce small mammal populations or their burrows to the point that there are insufficient underground refugia, which are used by Sonoma California tiger salamanders for foraging, protection from predators, and shelter from the elements (*e.g.,* discing, deep ripping, land conversion to vineyards, rodent control in existing vineyards); and

5. Activities that create barriers impassable by salamanders, or those activities that increase mortality in upland dispersal habitat between extant breeding occurrences.

In the case of the Sonoma California tiger salamander, natural repopulation of sites where the Sonoma California tiger salamander has been extirpated is likely not possible without human assistance and landowner cooperation. Examples of such proactive activities that benefit the Sonoma California tiger salamander include enhancement or creation of breeding ponds and control of nonnative predators. These are the types of proactive, voluntary conservation efforts that are necessary to prevent the extinction and promote the recovery of many other species as well (Wilcove and Lee 2004, p. 639; Shogren *et al.* 1999, p. 1260; Wilcove and Chen 1998, p. 1407; Wilcove *et al.* 1996, pp. 3–5).

Criteria Used To Identify Critical Habitat

As required by section 4(b)(1)(A) of the Act, we used the best scientific and commercial data available to designate critical habitat. We reviewed available information pertaining to the habitat requirements of this species. In accordance with the Act and its implementing regulation at 50 CFR 424.12(e), we considered whether designating additional areas—outside those currently occupied as well as those occupied at the time of listing—are necessary to ensure the conservation of the species. We are designating critical habitat only in areas within the geographical area occupied by the species at the time of listing in 2003. We are not designating any areas outside the geographical area occupied by the species because the occupied area is sufficient for the conservation of the species.

In the 2009 proposed rule, we reviewed the overall approach to the conservation of the Sonoma California tiger salamander undertaken by local, State, and Federal agencies operating within the species' range within Sonoma County, and those efforts related to the Conservation Strategy being undertaken by the resource agencies, local governments, and representatives from the environmental and building communities.

We based the extent of the proposed critical habitat for the Sonoma California tiger salamander on historical and current range of the species, as well as the Conservation Strategy. Historical records for the species and its habitat have been documented throughout the Santa Rosa Plain and into the Petaluma

River watershed. Major water courses or floodplains were used to delineate boundaries where information on their location and extent was available. In addition, we used aerial photography to examine historical and current habitat as well as land use patterns.

We also reviewed available information that pertains to the upland and aquatic habitat requirements of this species. Based on the best available information, we included areas where the species historically occurred, or currently occurs, or has the potential to occur based on the suitability of habitat. We identified areas that represent the range of environmental, ecological, and genetic variation of the Sonoma California tiger salamander, and contain the necessary PCEs (see Primary Constituent Elements for the Sonoma California Tiger Salamander, above).

After identifying the PCEs, we used the PCEs in combination with information on Sonoma California tiger salamander locations, geographic distribution, vegetation, topography, geology, soils, distribution of Sonoma California tiger salamander occurrences within and between vernal pool types, watersheds, current land uses, scientific information on the biology and ecology of the Sonoma California tiger salamander, and conservation principles to identify essential habitat in the proposed rule. As a result of this process, the critical habitat unit possesses both aquatic and upland habitat types that exhibit a range of topography, landscape features, and surrounding land uses that are representative of the geographical range and environmental variability of habitat for the Sonoma California tiger salamander.

The critical habitat unit in this final designation was delineated by digitizing a polygon (map unit) using ArcView (Environmental Systems Research Institute, Inc.) GIS program. The polygon was created by modifying the Potential Range of the Sonoma Santa Rosa Plain Conservation Strategy California tiger salamander polygon as identified in the Map (California Department of Fish and Game 2005, p. 1). We evaluated the historic and current geographic range and potential suitable habitat, and identified areas not containing PCEs (see Primary Constituent Elements for the Sonoma California Tiger Salamander) in this final designation.

When determining critical habitat boundaries within this final rule, we made every effort to avoid including developed areas such as lands covered by buildings, pavement, and other structures because such lands lack physical and biological features for the Sonoma California tiger salamander. The scale of the maps we prepared under the parameters for publication within the Code of Federal Regulations may not reflect the exclusion of such developed lands. Any such lands inadvertently left inside critical habitat boundaries shown on the maps of this final rule have been excluded by text in the rule and are not designated as critical habitat. Therefore, a Federal action involving these lands will not trigger section 7 consultation with respect to critical habitat and the requirement of no adverse modification unless the specific action would affect the physical and biological features in the adjacent critical habitat.

We are designating as critical habitat lands that we have determined were occupied at the time of listing and contain sufficient physical and biological features to support life-history processes essential for the conservation of the Sonoma California tiger salamander. Furthermore, we have determined that the areas we are designating as critical habitat in this final rule are essential for the conservation of the species.

Final Critical Habitat Designation

We are designating a single unit as critical habitat for the Sonoma California tiger salamander. The critical habitat area described below constitutes our best assessment at this time of the area that meets the definition of critical habitat. The single unit (Santa Rosa Plain Unit) is within the geographical area occupied at the time of listing.

Santa Rosa Plain Unit

This unit is located on the Santa Rosa Plain in central Sonoma County and contains approximately 47,383 ac (19,175 ha), which includes 745 ac (301 ha) of State lands, 744 ac (301 ha) of city lands, 498 ac (202 ha) of county lands, 9 ac (4 ha) of individually owned tribal trust land, and 45,387 ac (18,367 ha) of private lands. No Federal lands are included in this proposed unit. The unit is partially bordered on the west by the generalized eastern boundary of the 100-year Laguna de Santa Rosa floodplain, on the southwest by Hensley Road, on the south by Pepper Road (northwest of Petaluma), on the east generally by and near Petaluma Hill Road or by the urban centers of Santa Rosa and Rohnert Park, and on the north by the Town of Windsor.

This unit is characterized by vernal pools, seasonal wetlands, and associated grassland habitat. This unit contains the physical and biological features essential to the conservation of the Sonoma California tiger salamander, and is within the geographical area occupied at the time of listing. The critical habitat unit supports vernal pool complexes and manmade ponds that are currently known to support breeding Sonoma California tiger salamanders (PCE 1), upland habitats with underground refugia (PCE 2), and upland dispersal habitat allowing movement between occupied sites (PCE 3). A segment of the 100-year floodplain that is located between the Stony Point Conservation Area (near Wilfred Avenue) and the Northwest Cotati Conservation Area (near Nahmens Road) is included within the final designation to prevent fragmentation of the northern and southern breeding concentrations within the unit, by allowing for potential dispersal and genetic exchange.

The physical and biological features essential to the conservation of the Sonoma California tiger salamander may require special management considerations or protection to minimize impacts from nonnative predators on otherwise suitable breeding habitat, disturbance of aquatic breeding habitats, activities that impair the water quality of aquatic breeding habitat, activities that reduce underground refugia, creation of impassable barriers, and disruption of vernal pool complex processes (see *Special Management Considerations or Protections* section above). Primary threats to the Sonoma California tiger salamander include habitat destruction, degradation, and fragmentation. Secondary threats include predation and competition from introduced exotic species, possible commercial overutilization, disease, hybridization with nonnative salamanders, various chemical contaminants, road-crossing mortality, and rodent control operations. The Sonoma California tiger salamander is also vulnerable to chance environmental or demographic events (to which small populations are particularly vulnerable). The combination of the Sonoma California tiger salamander biology and its specific habitat requirements makes this animal highly susceptible to random events, such as drought or disease. Such events are not usually a concern until the number of breeding sites, refugia habitat, or geographic distribution become severely limited, as is the case with the Sonoma California tiger salamander.

General land use in the unit includes urban and rural development, which has taken place for over 100 years in this area. For the past 25 years, urban growth has encroached into areas

inhabited by the Sonoma California tiger salamander. Voters in the cities of Cotati, Rohnert Park, and Santa Rosa have established urban growth boundaries for their communities. This is intended to accomplish the goal of city-centered growth, resulting in rural and agricultural land uses being maintained between the urbanized areas. Therefore, it can be reasonably expected that rural land uses will continue into the foreseeable future. There are also acreages of publicly owned property and preserves located in the Santa Rosa Plain, which will further protect against development. Some of the areas within these urban growth boundaries, however, include lands inhabited by Sonoma California tiger salamanders. Agricultural practices, including discing, have also disturbed seasonal wetlands and upland habitat on the Santa Rosa Plain. However, some agricultural practices, such as grazed pasture, have protected habitat from intensive development.

Conservation planning efforts for the Sonoma California tiger salamander include the development of the Conservation Strategy by the Conservation Strategy Team, which was made up of representatives of government agencies and interested parties. The Conservation Strategy identifies specific areas that are likely to contribute the most for the conservation, survival, and recovery of the Sonoma California tiger salamander. There are eight conservation areas and one Southwest Santa Rosa Preserve System that are important to the long-term survival and recovery of the Sonoma California tiger salamander. The purpose of the conservation areas is to ensure that preservation occurs throughout the range of the Sonoma California tiger salamander. The designation of conservation areas is based upon the following factors: (1) Known distribution of Sonoma California tiger salamander, (2) presence of suitable Sonoma California tiger salamander habitat, (3) presence of large blocks of natural or restorable land, and (4) adjacency to existing preserves. These areas are essential for the Sonoma California tiger salamander, support the critical habitat primary constituent elements, and encompass the majority of all known occurrences of the Sonoma California tiger salamander. The critical habitat unit is larger than the conservation areas described and provides for potential dispersal and expansion opportunities of local Sonoma California tiger salamander populations, and the critical habitat unit includes areas that may be restored from incompatible land management.

Although the Conservation Strategy was drafted in 2005, to date, local governmental agencies have not yet been able to complete the implementing ordinances. However, the Service has incorporated many of the recommendations and concepts of the Conservation Strategy in the Programmatic Biological Opinion to benefit the Sonoma California tiger salamander.

Several conservation and mitigation banks have been established within the areas identified for conservation, and many are protected by a conservation easement or are owned by the California Department of Fish and Game. Additionally, the banks are all managed to benefit the Sonoma California tiger salamander.

In the January 18, 2011, revised proposed rule (76 FR 2863), we indicated that in the final rule we may consider exclusion of all or some of the Federated Indians of Graton Rancheria of California's 252-ac (102-ha) parcel of tribal trust land that overlapped proposed critical habitat. We noted the potential exclusion would occur under section 4(b)(2) of the Act. We are now excluding the 252-ac (102-ha) parcel under section 4(b)(2) of the Act. Further discussion is provided below in the section *Exclusions Based on Other Relevant Impacts.*

Effects of Critical Habitat Designation

Section 7 Consultation

Section 7(a)(2) of the Act requires Federal agencies, including the Service, to ensure that any action they fund, authorize, or carry out is not likely to jeopardize the continued existence of any endangered species or threatened species or result in the destruction or adverse modification of designated critical habitat of such species. In addition, section 7(a)(4) of the Act requires Federal agencies to confer with the Service on any agency action which is likely to jeopardize the continued existence of any species proposed to be listed under the Act or result in the destruction or adverse modification of proposed critical habitat.

Decisions by the 5th and 9th Circuit Courts of Appeals have invalidated our regulatory definition of ''destruction or adverse modification'' (50 CFR 402.02) (see *Gifford Pinchot Task Force* v. *U.S. Fish and Wildlife Service,* 378 F. 3d 1059 (9th Cir. 2004) and *Sierra Club* v. *U.S. Fish and Wildlife Service et al.,* 245 F.3d 434, 442 (5th Cir. 2001)), and we do not rely on this regulatory definition when analyzing whether an action is likely to destroy or adversely modify critical habitat. Under the statutory provisions of the Act, we determine destruction or adverse modification on the basis of whether, with implementation of the proposed Federal action, the affected critical habitat would continue to serve its intended conservation role for the species.

If a Federal action may affect a listed species or its critical habitat, the responsible Federal agency (action agency) must enter into consultation with us. Examples of actions that are subject to the section 7 consultation process are actions on State, tribal, local, or private lands that require a Federal permit (such as a permit from the U.S. Army Corps of Engineers under section 404 of the Clean Water Act (33 U.S.C. 1251 *et seq.*) or a permit from the Service under section 10 of the Act) or that involve some other Federal action (such as funding from the Federal Highway Administration, Federal Aviation Administration, or the Federal Emergency Management Agency). Federal actions not affecting listed species or critical habitat, and actions on State, tribal, local, or private lands that are not federally funded or authorized, do not require section 7 consultation.

As a result of section 7 consultation, we document compliance with the requirements of section 7(a)(2) through our issuance of:

(1) A concurrence letter for Federal actions that may affect, but are not likely to adversely affect, listed species or critical habitat; or

(2) A biological opinion for Federal actions that may affect, or are likely to adversely affect, listed species or critical habitat.

When we issue a biological opinion concluding that a project is likely to jeopardize the continued existence of a listed species and/or destroy or adversely modify critical habitat, we provide reasonable and prudent alternatives to the project, if any are identifiable, that would avoid the likelihood of jeopardy and/or destruction or adverse modification of critical habitat. We define ''reasonable and prudent alternatives'' (at 50 CFR 402.02) as alternative actions identified during consultation that:

(1) Can be implemented in a manner consistent with the intended purpose of the action,

(2) Can be implemented consistent with the scope of the Federal agency's legal authority and jurisdiction,

(3) Are economically and technologically feasible, and

(4) Would, in the Director's opinion, avoid the likelihood of jeopardizing the

continued existence of the listed species and/or avoid the likelihood of destroying or adversely modifying critical habitat.

Reasonable and prudent alternatives can vary from slight project modifications to extensive redesign or relocation of the project. Costs associated with implementing a reasonable and prudent alternative are similarly variable.

Regulations at 50 CFR 402.16 require Federal agencies to reinitiate consultation on previously reviewed actions in instances where we have listed a new species or subsequently designated critical habitat that may be affected and the Federal agency has retained discretionary involvement or control over the action (or the agency's discretionary involvement or control is authorized by law). Consequently, Federal agencies sometimes may need to request reinitiation of consultation with us on actions for which formal consultation has been completed, if those actions with discretionary involvement or control may affect subsequently listed species or designated critical habitat.

Application of the ''Adverse Modification'' Standard

The key factor related to the adverse modification determination is whether, with implementation of the proposed Federal action, the affected critical habitat would continue to serve its intended conservation role for the species. Activities that may destroy or adversely modify critical habitat are those that alter the physical and biological features to an extent that appreciably reduces the conservation value of critical habitat for the Sonoma California tiger salamander. As discussed above, the role of critical habitat is to support life-history needs of the species and provide for the conservation of the species.

Section 4(b)(8) of the Act requires us to briefly evaluate and describe, in any proposed or final regulation that designates critical habitat, activities involving a Federal action that may destroy or adversely modify such habitat, or that may be affected by such designation.

Examples of activities that, when authorized, funded, or carried out by a Federal agency, may affect critical habitat and therefore should result in consultation for the Sonoma California tiger salamander include, but are not limited to:

(1) Actions that would compromise the function of vernal pools, swales, ponds (natural and manmade), and other seasonal wetlands as described in the Primary Constituent Elements for the Sonoma California Tiger Salamander section (see PCE 1). Such activities could include, but are not limited to, constructing new structures, vineyards, and roads; discing; grading; and activities resulting in water diversion. These activities could destroy Sonoma California tiger salamander breeding sites, alter the hydrological regime necessary for successful larval metamorphosis, and eliminate or reduce the habitat necessary for the growth and reproduction of the Sonoma California tiger salamander.

(2) Actions that would significantly affect water quality, chemistry, or temperature. Such activities could include, but are not limited to, the release of chemicals, biological pollutants, or heated effluents into the surface water or connected ground water. These activities could alter water conditions to levels that are beyond the tolerances of one or more life stages of the Sonoma California tiger salamander and could thereby result in direct or cumulative adverse effects.

(3) Actions that would significantly fragment and isolate aquatic and upland habitat. Such activities could include, but are not limited to, constructing new structures and new roads. These activities could limit or prevent the dispersal of Sonoma California tiger salamanders from breeding sites to upland habitat, or vice versa, due to barriers to movement, including structures, certain types of curbs, or increased traffic density. These activities could compromise the metapopulation structure of the Sonoma population by reducing opportunities for recolonization of some sites that may have experienced natural local extinctions.

(4) Actions that would significantly compromise upland habitat function and value that provides food, cover or dispersal opportunities for the Sonoma California tiger salamander. Such activities could include, but are not limited to, use of rodenticides or insecticides, discing, deep ripping, and grading. These activities could eliminate or reduce the availability of subsurface refugia, or could reduce or eliminate the prey species required for the survival of adult and juvenile Sonoma California tiger salamanders.

Exemptions

Application of Section 4(a)(3) of the Act

The Sikes Act Improvement Amendment of 1997 (Sikes Act) (16 U.S.C. 670a) required each military installation that includes land and water suitable for the conservation and management of natural resources to complete an integrated natural resources management plan (INRMP) by November 17, 2001. An INRMP integrates implementation of the military mission of the installation with stewardship of the natural resources found on the base. Each INRMP includes:

(1) An assessment of the ecological needs on the installation, including the need to provide for the conservation of listed species;

(2) A statement of goals and priorities;

(3) A detailed description of management actions to be implemented to provide for these ecological needs; and

(4) A monitoring and adaptive management plan.

Among other things, each INRMP must, to the extent appropriate and applicable, provide for fish and wildlife management; fish and wildlife habitat enhancement or modification; wetland protection, enhancement, and restoration where necessary to support fish and wildlife; and enforcement of applicable natural resource laws.

The National Defense Authorization Act for Fiscal Year 2004 (Pub. L. 108–136) amended the Act to limit areas eligible for designation as critical habitat. Specifically, section 4(a)(3)(B)(i) of the Act (16 U.S.C. 1533(a)(3)(B)(i)) now provides: ''The Secretary shall not designate as critical habitat any lands or other geographical areas owned or controlled by the Department of Defense, or designated for its use, that are subject to an integrated natural resources management plan prepared under section 101 of the Sikes Act (16 U.S.C. 670a), if the Secretary determines in writing that such plan provides a benefit to the species for which critical habitat is proposed for designation.''

There are no Department of Defense lands within the proposed critical habitat designation. Therefore, we are not exempting lands from this final designation of critical habitat for the Sonoma California tiger salamander pursuant to section 4(a)(3)(B)(i) of the Act.

Exclusions

Application of Section 4(b)(2) of the Act

Section 4(b)(2) of the Act states that the Secretary shall designate and make revisions to critical habitat on the basis of the best available scientific data after taking into consideration the economic impact, national security impact, and any other relevant impact of specifying any particular area as critical habitat. The Secretary may exclude an area from critical habitat if he determines that the

benefits of such exclusion outweigh the benefits of specifying such area as part of the critical habitat, unless he determines, based on the best scientific data available, that the failure to designate such area as critical habitat will result in the extinction of the species. In making that determination, the statute on its face, as well as the legislative history, are clear that the Secretary has broad discretion regarding which factor(s) to use and how much weight to give to any factor.

Under section 4(b)(2) of the Act, we may exclude an area from designated critical habitat based on economic impacts, impacts on national security, or any other relevant impacts. In considering whether to exclude a particular area from the designation, we must identify the benefits of including the area in the designation, identify the benefits of excluding the area from the designation, and determine whether the benefits of exclusion outweigh the benefits of inclusion. If the analysis indicates that the benefits of exclusion outweigh the benefits of inclusion, the Secretary may exercise his discretion to exclude the area only if such exclusion would not result in the extinction of the species.

When considering the benefits of inclusion for an area, we consider the additional regulatory benefits that area would receive from the protection from adverse modification or destruction as a result of actions with a Federal nexus; the educational benefits of mapping critical habitat for recovery of the listed species; and any benefits that may result from a designation due to State or Federal laws that may apply to critical habitat.

When considering the benefits of exclusion, we consider, among other things, whether exclusion of a specific area is likely to result in conservation; the continuation, strengthening, or encouragement of partnerships; or implementation of a management plan that provides equal to or more conservation than a critical habitat designation would provide.

In the case of the Sonoma California tiger salamander, the benefits of critical habitat include public awareness of Sonoma California tiger salamander presence and the importance of habitat protection, and in cases where a Federal nexus exists, increased habitat protection for the Sonoma California tiger salamander due to the protection from adverse modification or destruction of critical habitat. Since the Sonoma California tiger salamander was listed in 2003, numerous projects on privately owned lands have had a Federal nexus that triggered consultation under section 7 of the Act. Since completion of the Programmatic Biological Opinion, permitted projects have compensated for effects to Sonoma California tiger salamanders resulting in conservation for the Sonoma California tiger salamander.

When we evaluate the value of a conservation plan in considering the benefits of exclusion, we consider a variety of factors, including but not limited to, whether the plan is finalized; how it provides for the conservation of the essential physical and biological features; whether there is a reasonable expectation that the conservation management strategies and actions contained in a conservation plan will be implemented into the future; whether the conservation strategies in the plan are likely to be effective; and whether the plan contains a monitoring program or adaptive management to ensure that the conservation measures are effective and can be adapted in the future in response to new information.

After identifying the benefits of inclusion and the benefits of exclusion, we carefully weigh the benefits of inclusion and the benefits of exclusion to evaluate whether the benefits of exclusion outweigh those of inclusion. If our analysis indicates that the benefits of exclusion outweigh the benefits of inclusion, we then determine whether exclusion would result in extinction. If exclusion of an area from critical habitat will result in extinction, we will not exclude it from the designation.

Based on the information provided by entities seeking exclusion, as well as any additional public comments received, we evaluated whether certain lands in the proposed critical habitat were appropriate for exclusion from this final designation pursuant to section 4(b)(2) of the Act. The Secretary has determined to exercise his discretion to exclude approximately 252 ac (102 ha) of tribal trust lands belonging to the Federated Indians of the Graton Rancheria (Tribe) from critical habitat designation for the Sonoma California tiger salamander. These lands are excluded because the Secretary determined that:

(1) The conservation value of the lands and essential features contained therein will be preserved for the foreseeable future by existing or future protective actions;

(2) It is appropriate for exclusion under the ''other relevant factor'' provisions of section 4(b)(2) of the Act, as the benefits of excluding these lands outweigh the benefit of including these lands in the designation, and exclusion will not lead to the extinction of the species; and

(3) The exclusion will foster continuation, strengthening, and encouragement of partnerships.

We take into consideration our partnership and existing conservation actions that the Tribe has implemented or are currently implementing when conducting our analysis under section 4(b)(2) of the Act in this final critical habitat designation. We also take into consideration conservation actions that are planned as part of our on-going commitment to the government-to-government relationship with tribes. Section 4(b)(2) of the Act allows the Secretary to exclude areas from critical habitat based on economic or other relevant impacts if the Secretary determines that the benefits of such exclusion outweigh the benefits of designating the area as critical habitat. However, an exclusion cannot occur if it will result in the extinction of the species concerned. For further explanation of the exclusion of approximately 252 ac (102 ha) of tribal trust lands belonging to the Federated Indians of the Graton Rancheria see ''Exclusions Based on Other Relevant Impacts'' section below.

Exclusions Based on Economic Impacts

Under section 4(b)(2) of the Act, we consider the economic impacts of specifying any particular area as critical habitat. In order to consider economic impacts, we prepared a draft economic analysis of the proposed critical habitat designation and related factors (IEC 2010). The draft economic analysis, dated December 3, 2010, was made available for public review and comment from January 18, 2011, through February 17, 2011 (76 FR 2863) and again from June 21, 2011, through July 5, 2011 (76 FR 36068). Following the close of the two comment periods, a final economic analysis (dated July 27 2011) of the potential economic effects of the designation was developed taking into consideration the public comments and any new information (IEC 2011). In the final economic analysis, an addendum covers the potential economic impacts of including the Roblar Road addition in the final critical habitat designation.

The intent of the final economic analysis (FEA) is to quantify the economic impacts of all potential conservation efforts for the Sonoma California tiger salamander. Some of these costs will likely be incurred regardless of whether we designate critical habitat; these are baseline costs. The economic impact of the final critical habitat designation is analyzed by comparing both ''with critical habitat'' and ''without critical habitat''

scenarios. The ''without critical habitat'' scenario represents the baseline for the analysis, considering protections already in place for the species (*e.g.,* under the Federal listing and other Federal, State, and local regulations). The baseline, therefore, represents the costs incurred regardless of whether critical habitat is designated. The ''with critical habitat'' scenario describes the incremental impacts associated specifically with the designation of critical habitat for the species. The incremental conservation efforts and associated impacts are those not expected to occur absent the designation of critical habitat for the species. In other words, the incremental costs are those attributable solely to the designation of critical habitat above and beyond the baseline costs; these are the costs we consider in the final designation of critical habitat. The analysis looks retrospectively at baseline impacts incurred since the species was listed, and forecasts both baseline and incremental impacts likely to occur with the designation of critical habitat.

The FEA also addresses how potential economic impacts are likely to be distributed, including an assessment of any local or regional impacts of habitat conservation and the potential effects of conservation activities on government agencies, private businesses, and individuals. The FEA measures lost economic efficiency associated with residential and commercial development and public projects and activities, such as economic impacts on water management and transportation projects, Federal lands, small entities, and the energy industry. Decision-makers can use this information to assess whether the effects of the designation might unduly burden a particular group or economic sector. Finally, the FEA looks qualitatively at costs that have been incurred since 2003 (year of the species' listing) (68 FR 13498; March 19, 2003), and considers those costs that may occur in the 25 years following the designation of critical habitat, which has been determined to be the appropriate period for analysis because limited planning information is available for most activities to forecast activity levels for projects beyond a 25-year timeframe. The FEA quantifies economic impacts of the Sonoma California tiger salamander conservation efforts associated with the following categories of activity: (1) Commercial and residential development, (2) transportation projects, and (3) utility and pipeline construction and maintenance activities. In addition, the FEA identifies potential economic impacts to agriculture and mitigation banks, but concludes that these activities are not likely to incur measurable economic impacts as a result of the designation of critical habitat.

Our economic analysis did not identify any disproportionate costs that are likely to result from the designation, and the incremental impacts stem entirely from the administrative cost of Section 7 consultation. Consequently, we have determined not to exert our discretion to exclude any areas from this designation of critical habitat for the Sonoma California tiger salamander based on economic impacts.

A copy of the FEA with supporting documents may be obtained by contacting the Sacramento Fish and Wildlife Office (see **ADDRESSES**) or by downloading from the Internet at *http://www.regulations.gov.*

Exclusions Based on National Security Impacts

Under section 4(b)(2) of the Act, we consider whether there are lands owned or managed by the Department of Defense where a national security impact might exist. In preparing this final rule, we have determined that the lands within the designation of critical habitat for the Sonoma California tiger salamander are not owned or managed by the Department of Defense, and, therefore, we anticipate no impact on national security. Consequently, the Secretary is not exerting his discretion to exclude any areas from this final designation based on impacts on national security.

Exclusions Based on Other Relevant Impacts

Under section 4(b)(2) of the Act, we consider any other relevant impacts, in addition to economic impacts and impacts on national security. We consider a number of factors, including whether the landowners have developed any HCPs or other management plans for the area, or whether there are conservation partnerships that would be encouraged by designation of, or exclusion from, critical habitat. In addition, we look at any tribal issues, and consider the government-to-government relationship of the United States with tribal entities. We also consider any social impacts that might occur because of the designation.

Table 1 below provides approximate areas of lands that meet the definition of critical habitat, but are excluded under section 4(b)(2) of the Act from this final critical habitat rule.

TABLE 1—EXEMPTIONS AND AREAS EXCLUDED BY CRITICAL HABITAT UNIT IN THIS FINAL DESIGNATION

Unit	Specific area	Basis for exclusion/exemption	Areas meeting the definition of critical habitat in acres (hectares)	Areas exempted or excluded in acres (hectares)
Santa Rosa Plain	Lands Owned and Managed by the Federated Indians of Graton Rancheria.	Section 4(b)(2) of the Act; Graton Rancheria Natural Resources Management Plan.	252 ac (102 ha) ..	252 ac (102 ha).

Land and Resource Management Plans, Conservation Plans, or Agreements Based on Conservation Partnerships

We consider a current land management or conservation plan (HCPs as well as other types) to provide adequate management or protection if it meets the following criteria:

(1) The plan is complete and provides the same or better level of protection for the species and features essential to its conservation than that provided by critical habitat designation;

(2) There is a reasonable expectation that the conservation management strategies and actions will be implemented for the foreseeable future, based on past practices, written guidance, or regulations; and

(3) The plan provides conservation strategies and measures consistent with currently accepted principles of conservation biology and that these measures will be effective in conserving the species.

We believe that the Graton Rancheria Natural Resources Management Plan

fulfills the above criteria, and are excluding non-Federal lands covered by this plan that provide for the conservation of the Sonoma California tiger salamander.

Graton Rancheria Natural Resources Management Plan

The Graton Rancheria Natural Resources Management Plan (NRMP) covers 252 ac (102 ha) that are tribal trust lands (Reservation) belonging to the Federated Indians of Graton Rancheria. The NRMP was finalized in March 2011 and will be implemented through tribal ordinances. The NRMP codifies the protections afforded in the 2009 *Biological Opinion on the Proposed Graton Rancheria Casino and Hotel Project, City of Rohnert Park, Sonoma County, California* (Graton Biological Opinion (Service File #81420–2009–F–0336). Approximately 82 ac (33 ha) in the northeastern and central portion of the Reservation will be developed as a casino with a hotel and supporting facilities and infrastructure, and this area will be compensated for by conserving additional lands for the Sonoma California tiger salamander off-site of the project area as identified in the Graton Biological Opinion and the NRMP (Analytical Environmental Services 2011).

The remaining 170-ac (69-ha) southern portion of the Reservation is located primarily within the 100-year floodplain of the Laguna de Santa Rosa and may provide dispersal habitat for the Sonoma California tiger salamander during times when the area is not flooded. The NRMP provides for the long-term protection of the species through adaptive management measures that preferentially conserve rare habitats and habitats known or likely to be occupied by threatened and endangered species known to occur in the Santa Rosa Plain wetland or vernal pool habitats, including the Sonoma California tiger salamander, and four listed plants: Sonoma sunshine, Burke's goldfields, many-flowered navarretia, and Sebastopol meadowfoam. The NRMP also provides for the long-term protection of the Sonoma California tiger salamander by conserving lands in perpetuity to compensate for loss of habitat associated with development, by applying mitigation ratios equivalent to those listed in the biological opinion. These lands will not be developed and will be managed as open space in perpetuity under the NRMP. Management of the 170 ac (69 ha) will focus on techniques including mowing and livestock grazing to maintain Sonoma California tiger salamander wetland, upland, and dispersal habitat (Analytical Environmental Services 2011). The 170 ac (69 ha) is described as a holding area. Land within the holding area may be converted to developed areas or preservation areas through the implementation of the guidelines of the NRMP and specific Tribal action. Preservation areas are defined as areas protected and actively managed as sensitive biological habitat for the long-term.

All of the approximately 252 ac (102 ha) of tribal trust lands that we are excluding are within the Santa Rosa Plain Unit.

Benefits of Inclusion

The principle benefit of including an area in a critical habitat designation is the requirement of Federal agencies to ensure that actions that they fund, authorize, or carry out are not likely to result in the destruction or adverse modification of any designated critical habitat, which is the regulatory standard of section 7(a)(2) of the Act under which consultation is completed. Federal agencies must consult with the Service on actions that may affect critical habitat and must avoid destroying, or adversely modifying, critical habitat. Federal agencies must also consult with us on actions that may affect a listed species, and refrain from undertaking actions that are likely to jeopardize the continued existence of such species. The analysis of effects to critical habitat is a separate and different analysis from that of the effects to the species. Therefore, the difference in outcomes of these two analyses represents the regulatory benefit of critical habitat. For some species (including the Sonoma California tiger salamander), and in some locations, the outcome of these analyses will be similar, because effects to habitat will often also result in effects to the species. However, the regulatory standard is different, as the jeopardy analysis investigates the action's impact to survival and recovery of the species, while the adverse modification analysis investigates the action's effects to the designated habitat's contribution to conservation. This will, in many instances, lead to different results and different regulatory requirements. Thus, critical habitat designations may provide greater benefits to the recovery of a species than would listing alone. Critical habitat may provide a regulatory benefit for the Sonoma California tiger salamander when there is a Federal nexus present for a project that might adversely modify critical habitat.

The consultation provisions under section 7(a) of the Act constitute the regulatory benefits of designating lands as critical habitat. As discussed above, Federal agencies must consult with us on actions that may affect critical habitat and must avoid destroying or adversely modifying critical habitat. Critical habitat may provide a regulatory benefit for the Sonoma California tiger salamander when there is a Federal nexus present for a project that might adversely modify critical habitat. With respect to the Graton Rancheria land, we expect development projects within the Reservation to require a section 404 permit under the Clean Water Act from the Army Corps of Engineers and a permit from the National Indian Gaming Commission. Therefore, critical habitat designation in the Santa Rosa Plain Unit would provide an additional regulatory benefit to the conservation of the Sonoma California tiger salamander by prohibiting adverse modification of habitat essential for the conservation of this species.

As discussed above, the NRMP provides beneficial protection of Sonoma California tiger salamander habitat that is considered necessary for the survival and recovery of the species. Therefore, for activities covered under the NRMP, we believe that protections provided by the designation of critical habitat will be redundant with protections provided by the NRMP, at least in conserved areas. However, the NRMP does not prohibit spray irrigation or development from occurring in areas that have not yet been conserved in a preservation area within the Reservation, as defined in the NRMP. These threats are significant and ongoing within the range of the Sonoma California tiger salamander in habitat that has not been conserved and managed to benefit the species.

Another possible benefit of including lands in critical habitat is public education regarding the potential conservation value of an area that may help focus conservation efforts on areas of high conservation value for certain species. Any information about the Sonoma California tiger salamander and its habitat that reaches a wide audience, including parties engaged in conservation activities, is valuable. The inclusion of lands in the Sonoma California tiger salamander critical habitat designation that are owned by or under the jurisdiction of the Reservation could be beneficial to the species, because while the NRMP establishes conservation goals for the Sonoma California tiger salamander and identifies criteria for identifying habitat to be conserved, the critical habitat designation specifically identifies those lands essential to the conservation of the species and which may require

special management considerations or protection. The process of proposing critical habitat provided an opportunity for peer review and public comment on habitat we determined meets the definition of critical habitat. This process is valuable to landowners and managers in prioritizing conservation and management of identified areas. Information on the Sonoma California tiger salamander and its habitat has also been provided to the public in the past through meetings, educational materials provided by the local jurisdictions, and recommendations provided in the Conservation Strategy. In general, we believe the designation of critical habitat for the Sonoma California tiger salamander will provide additional information for the public concerning the importance of essential habitat that has not already been available.

In summary, we believe that educational benefits are likely realized when any information about the Sonoma California tiger salamander and its habitat reaches a wide audience. The educational benefits of critical habitat designation on the Reservation lands may not be significant due to extensive past outreach and ongoing conservation efforts such as the listing of Sonoma California tiger salamander as endangered in 2003, the development and implementation of the Conservation Strategy, and the Programmatic Biological Opinion. And inclusion would enable an evaluation of adverse effects of spray irrigation or development to critical habitat in areas that have not yet been conserved in a preservation area within the Reservation.

Benefits of Exclusion

We believe the following benefits would be realized by forgoing designation of critical habitat for the Sonoma California tiger salamander on lands covered by the NRMP. These benefits include allowing for continued meaningful collaboration and effective working relationships with the Tribe to promote conservation of the Sonoma California tiger salamander and its habitat.

We acknowledge our unique and distinctive Federal tribal trust responsibility and obligation toward the Federated Indians of Graton Rancheria and their reservation lands, as well as their tribal sovereignty. We believe the exclusion of reservation lands from critical habitat will help preserve the partnership we have developed with the Tribe, reinforce those relationships we are building with other tribes, and foster future partnerships and development of future management plans with both Federated Indians of Graton Rancheria and other tribes. Therefore, excluding tribal reservation lands from critical habitat provides the significant benefit of maintaining and strengthening our existing conservation partnership and fostering new tribal partnerships. The Tribe has developed a NRMP which provides specific protection and management for the Sonoma California tiger salamander and for the physical and biological features essential to the conservation of the species, in most respects equal to or better than the designation of critical habitat would provide. Exclusion of the lands covered under the Graton Rancheria Natural Resources Management Plan from critical habitat would help preserve the partnerships we developed with the Federated Indians of Graton Rancheria in the development of the Graton Biological Opinion, and will also foster future partnerships and future conservation of the Sonoma California tiger salamander. Additionally, the Tribe has made specific commitments to conserve Sonoma California tiger salamander habitat. The commitments include onsite and offsite management and conservation consistent with the Biological Opinion and Conservation Strategy.

Benefits of Exclusion Outweigh the Benefits of Inclusion

The benefits of excluding the Reservation lands from critical habitat outweigh the benefits of inclusion, based on the conservation values outlined in the NRMP and summarized above. Any development of the Reservation will follow the mitigation ratios in the Graton Biological Opinion at off-site location(s) and will be managed in perpetuity for the benefit of the Sonoma California tiger salamander. The remainder will be primarily passively managed as a Holding Area or Preservation Area.

We reviewed and evaluated the benefits of inclusion and the benefits of exclusion of Federated Indians of Graton Rancheria reservation lands as critical habitat for the Sonoma California tiger salamander. Including reservation lands in the critical habitat designation for the Sonoma California tiger salamander will provide little additional regulatory protection under section 7(a) of the Act when there is a Federal nexus, and educational benefits of designation will be redundant with those achieved through listing and our cooperative efforts working with the Tribe to conserve the Sonoma California tiger salamander and the physical and biological features essential to the conservation of the species. We recognize there may be some ancillary benefit from other laws such as the California Environmental Quality Act (CEQA) and the National Environmental Policy Act (NEPA) resulting from designating these areas as critical habitat; however, we consider these possible benefits to be marginal considering the potential adverse impact that critical habitat designation could have on our partnership with the Tribe. We believe past and future coordination with the Tribe will provide sufficient education regarding the Sonoma California tiger salamander habitat conservation needs on tribal reservation lands, and therefore educational benefits for these areas are small.

The benefits of excluding Federated Indians of Graton Rancheria reservation lands from critical habitat are significant. Exclusion of these lands from critical habitat will help preserve the partnership we have developed and reinforce those we are building with other tribes, and foster future partnerships and development of management plans. The Tribe emphasized through a comment letter provided during the public comment period their belief that designation of critical habitat on tribal lands should not occur, especially on trust lands where the designation would include Tribal lands subject to their tribal management plan in preparation (Sarris 2010). We are committed to working with our tribal partner to further the conservation of the Sonoma California tiger salamander and other threatened and endangered species. Therefore, in consideration of the relevant impact to our government-to-government relationship with the Federated Indians of Graton Rancheria and our current and future conservation partnerships, and the development of an effective management plan which provides a benefit for the species, we determined the benefits of exclusion outweigh the benefits of inclusion in critical habitat designation for these lands.

In summary, based on our unique and distinctive Federal tribal trust responsibility and obligation towards the Tribe and the development of a management plan which benefits the conservation of the Sonoma California tiger salamander, we find that excluding the Federated Indians of Graton Rancheria reservation lands from this final critical habitat will preserve our partnership and foster future habitat management and species conservation efforts with the Tribe. These partnership benefits are significant and outweigh the limited regulatory and educational benefits of including these lands in final

critical habitat for the Sonoma California tiger salamander.

Exclusion Will Not Result in Extinction of the Species

We determined that the exclusion of approximately 252 ac (102 ha) of habitat from this final designation of critical habitat for the Sonoma California tiger salamander will not result in extinction of the species. The NRMP provides protection and long-term management of lands that meet the definition of critical habitat for the Sonoma California tiger salamander through on-site and off-site mitigation. Additionally, the jeopardy standard of section 7 of the Act for the Sonoma California tiger salamander provides assurances that the species will not go extinct as a result of exclusion from critical habitat designation. The consultation requirements of section 7(a)(2) and the attendant requirement to avoid jeopardy to the Sonoma California tiger salamander for projects with a Federal nexus will provide significant protection to the species. Therefore, based on the above discussion, the Secretary is exercising his discretion to exclude approximately 252 ac (102 ha) of habitat in the Santa Rosa Plain Unit from this final critical habitat designation.

Required Determinations

Regulatory Planning and Review—Executive Order 12866

The Office of Management and Budget (OMB) has determined that this rule is not significant and has not reviewed this rule under Executive Order 12866 (Regulatory Planning and Review). OMB bases its determination upon the following four criteria:

(1) Whether the rule will have an annual effect of $100 million or more on the economy or adversely affect an economic sector, productivity, jobs, the environment, or other units of the government.

(2) Whether the rule will create inconsistencies with other Federal agencies' actions.

(3) Whether the rule will materially affect entitlements, grants, user fees, loan programs or the rights and obligations of their recipients.

(4) Whether the rule raises novel legal or policy issues.

Regulatory Flexibility Act (5 U.S.C. 601 et seq.)

Under the Regulatory Flexibility Act (RFA; 5 U.S.C. 601 *et seq.*), as amended by the Small Business Regulatory Enforcement Fairness Act (SBREFA) of 1996 (5 U.S.C 801 *et seq.*), whenever an agency must publish a notice of rulemaking for any proposed or final rule, it must prepare and make available for public comment a regulatory flexibility analysis that describes the effects of the rule on small entities (small businesses, small organizations, and small government jurisdictions). However, no regulatory flexibility analysis is required if the head of an agency certifies the rule will not have a significant economic impact on a substantial number of small entities. The SBREFA amended the RFA to require Federal agencies to provide a certification statement of the factual basis for certifying that the rule will not have a significant economic impact on a substantial number of small entities. In this final rule, we are certifying that the critical habitat designation for the Sonoma California tiger salamander will not have a significant economic impact on a substantial number of small entities. The following discussion explains our rationale.

According to the Small Business Administration, small entities include small organizations, such as independent nonprofit organizations; small governmental jurisdictions, including school boards and city and town governments that serve fewer than 50,000 residents; as well as small businesses. Small businesses include manufacturing and mining concerns with fewer than 500 employees, wholesale trade entities with fewer than 100 employees, retail and service businesses with less than $5 million in annual sales, general and heavy construction businesses with less than $27.5 million in annual business, special trade contractors doing less than $11.5 million in annual business, and agricultural businesses with annual sales less than $750,000. To determine if potential economic impacts on these small entities are significant, we consider the types of activities that might trigger regulatory impacts under this rule, as well as the types of project modifications that may result. In general, the term ''significant economic impact'' is meant to apply to a typical small business firm's business operations.

To determine if the rule could significantly affect a substantial number of small entities, we consider the number of small entities affected within particular types of economic activities (*e.g.,* small business, small government jurisdiction, or small organization). We apply the ''substantial number'' test individually to each industry to determine if certification is appropriate. However, the SBREFA does not explicitly define ''substantial number'' or ''significant economic impact.'' Consequently, to assess whether a ''substantial number'' of small entities is affected by this designation, this analysis considers the relative number of small entities likely to be impacted in an area. In some circumstances, especially with critical habitat designations of limited extent, we may aggregate across all industries and consider whether the total number of small entities affected is substantial. In estimating the number of small entities potentially affected, we also consider whether their activities have any Federal involvement.

Designation of critical habitat only affects activities authorized, funded, or carried out by Federal agencies. Some kinds of activities are unlikely to have any Federal involvement and so will not be affected by critical habitat designation. In areas where the species is present, Federal agencies already are required to consult with us under section 7 of the Act on activities they authorize, fund, or carry out that may affect the Sonoma California tiger salamander. Federal agencies also must consult with us if their activities may affect critical habitat. Designation of critical habitat, therefore, could result in an additional economic impact on small entities due to the requirement to reinitiate consultation for ongoing Federal activities (see *Application of the ''Adverse Modification Standard''* section).

In our final economic analysis (FEA) of the critical habitat designation, we evaluated the potential economic effects on small business entities resulting from conservation actions related to the listing of the Sonoma California tiger salamander and the designation of critical habitat. The analysis is based on the estimated impacts associated with the rulemaking as described in Chapters 2 through 4 and Appendix A of the analysis and evaluates the potential for economic impacts related to: (1) Residential and commercial development, (2) transportation activities, (3) utility activities, (4) incremental administrative costs and (5) the energy industry (IEC 2011, pp. 1–5, 1–6). The FEA concludes that the proposed rulemaking may affect small entities (IEC 2011, pp. A1–A–6).

Incremental impacts from the administrative costs of section 7 consultations on critical habitat associated with residential and commercial development are expected for small entities. There are 1,911 businesses involved in development activities within Sonoma County, and of these, 1,896 are considered small businesses. Therefore, approximately 99

percent of all building construction companies in Sonoma County qualify as small entities. Because information on specific third parties that may be involved in future development consultations is lacking, the analysis conservatively assumes that all of the entities involved in future consultation efforts are small land subdivision companies.

Because the FEA calculates impacts to small businesses at the County-wide scale, it likely overestimates the impacts associated with critical habitat, which only covers approximately 4.2 percent of the County. The FEA assumes annual revenues of up to $33.5 million per small entity, and annualized impacts may be borne by all small land subdivision companies. Annualized impacts to the construction industry ($6,630 applying a 7 percent discount rate) are estimated to be significantly less than the annual revenues that could be generated by a single small building construction entity. If all impacts are borne by one single small construction company, the estimated annualized impact would represent, on average, between 0.04 and 1.27 percent of annual revenues (IEC 2011, p. A–6).

No other incremental impacts attributed to transportation or utility activities are expected to be borne by entities that meet the definition of small entities (IEC 2011, p. A–4). Other activities, such as agricultural and mitigation bank establishment, are not expected to be affected by the designation of critical habitat; therefore no incremental impacts are expected to be borne by small entities (IEC 2011, pp. A–4, A–5).

In summary, we considered whether this designation would result in a significant economic effect on a substantial number of small entities. Based on our analysis, we have determined that this rule will affect a substantial number of small business entities in the building construction sector, but since the effect is less than one percent of estimated annual revenues, it is not considered to be a significant economic impact. As a result, we concluded that this rule would not result in a significant economic impact on a substantial number of small entities. Therefore, we are certifying that the designation of critical habitat for the Sonoma California tiger salamander will not have a significant economic impact on a substantial number of small entities, and a regulatory flexibility analysis is not required.

Energy Supply, Distribution, or Use—Executive Order 13211

Executive Order 13211 (Actions Concerning Regulations That Significantly Affect Energy Supply, Distribution, or Use) requires agencies to prepare Statements of Energy Effects when undertaking certain actions. OMB has provided guidance for implementing this Executive Order that outlines nine outcomes that may constitute ''a significant adverse effect'' when compared to not taking the regulatory action under consideration. The FEA concludes that incremental impacts to utilities are limited to the administrative cost of intra-Service consultation associated with a habitat conservation plan (HCP), which does not involve third parties. Any other impacts are expected to occur as a result of the listing of the Sonoma California tiger salamander, regardless of the designation of critical habitat. The economic analysis finds that none of these criteria are relevant to this analysis. Thus, based on information in the economic analysis, energy-related impacts associated with Sonoma California tiger salamander conservation activities within critical habitat are not expected (IEC 2011, pp. 4–4, 4–5, A–7). As such, the designation of critical habitat is not expected to significantly affect energy supplies, distribution, or use. Therefore, this action is not a significant energy action, and no Statement of Energy Effects is required.

Unfunded Mandates Reform Act (2 U.S.C. 1501 et seq.)

In accordance with the Unfunded Mandates Reform Act (2 U.S.C. 1501 *et seq.*), we make the following findings:

(1) This rule will not produce a Federal mandate. In general, a Federal mandate is a provision in legislation, statute, or regulation that would impose an enforceable duty upon State, local, or tribal governments, or the private sector, and includes both ''Federal intergovernmental mandates'' and ''Federal private sector mandates.'' These terms are defined in 2 U.S.C. 658(5)–(7). ''Federal intergovernmental mandate'' includes a regulation that ''would impose an enforceable duty upon State, local, or tribal governments'' with two exceptions. It excludes ''a condition of Federal assistance.'' It also excludes ''a duty arising from participation in a voluntary Federal program,'' unless the regulation ''relates to a then-existing Federal program under which $500,000,000 or more is provided annually to State, local, and tribal governments under entitlement authority,'' if the provision would ''increase the stringency of conditions of assistance'' or ''place caps upon, or otherwise decrease, the Federal Government's responsibility to provide funding,'' and the State, local, or tribal governments ''lack authority'' to adjust accordingly. At the time of enactment, these entitlement programs were: Medicaid; Aid to Families with Dependent Children work programs; Child Nutrition; Food Stamps; Social Services Block Grants; Vocational Rehabilitation State Grants; Foster Care, Adoption Assistance, and Independent Living; Family Support Welfare Services; and Child Support Enforcement. ''Federal private sector mandate'' includes a regulation that ''would impose an enforceable duty upon the private sector, except (i) A condition of Federal assistance or (ii) a duty arising from participation in a voluntary Federal program.''

The designation of critical habitat does not impose a legally binding duty on non-Federal Government entities or private parties. Under the Act, the only regulatory effect is that Federal agencies must ensure that their actions do not destroy or adversely modify critical habitat under section 7. While non-Federal entities that receive Federal funding, assistance, or permits, or that otherwise require approval or authorization from a Federal agency for an action, may be indirectly impacted by the designation of critical habitat, the legally binding duty to avoid destruction or adverse modification of critical habitat rests squarely on the Federal agency. Furthermore, to the extent that non-Federal entities are indirectly impacted because they receive Federal assistance or participate in a voluntary Federal aid program, the Unfunded Mandates Reform Act would not apply, nor would critical habitat shift the costs of the large entitlement programs listed above onto State governments.

(2) We do not believe that this rule will significantly or uniquely affect small governments because the lands being proposed for critical habitat are mostly private lands with some other local government lands. Given the distribution of this species, small governments will not be uniquely affected by this proposed rule. Small governments will not be affected at all unless they propose an action requiring Federal funds, permits, or other authorization. Any such activity will require that the involved Federal agency ensure that the action is not likely to adversely modify or destroy designated critical habitat. However, as discussed above, Federal agencies are currently required to ensure that any such activity

is not likely to jeopardize the species, and no further regulatory impacts from the designation of critical habitat are anticipated.

Consequently, we do not believe that the critical habitat designation would significantly or uniquely affect small government entities. As such, a Small Government Agency Plan is not required.

Takings—Executive Order 12630

In accordance with Executive Order 12630 (Government Actions and Interference with Constitutionally Protected Private Property Rights), we have analyzed the potential takings implications of designating critical habitat for the Sonoma California tiger salamander in a takings implications assessment. Critical habitat designation does not affect landowner actions that do not require Federal funding or permits, nor does it preclude development of habitat conservation programs or issuance of incidental take permits to allow actions that do require Federal funding or permits to go forward. The takings implications assessment concludes that this designation of critical habitat for the Sonoma California tiger salamander does not pose significant takings implications for lands within or affected by the designation.

Federalism—Executive Order 13132

In accordance with Executive Order 13132 (Federalism), this rule does not have significant Federalism effects. A Federalism assessment is not required. In keeping with Department of the Interior and Department of Commerce policy, we requested information from, and coordinated development of, this critical habitat designation with appropriate State resource agencies in California. We did not receive comments from State resource agencies. The designation of critical habitat in areas currently occupied by the Sonoma California tiger salamander imposes nominal additional restrictions to those currently in place and, therefore, has little incremental impact on State and local governments and their activities. The designation may have some benefit to these governments in that the areas that contain the physical and biological features essential to the conservation of the species are more clearly defined, and the elements of the features of the habitat necessary to the conservation of the species are specifically identified. This information does not alter where and what federally sponsored activities may occur. However, it may assist local governments in long-range planning (rather than having them wait for case-by-case section 7 consultations to occur).

Where State and local governments require approval or authorization from a Federal agency for actions that may affect critical habitat, consultation under section 7(a)(2) would be required. While non-Federal entities that receive Federal funding, assistance, or permits, or that otherwise require approval or authorization from a Federal agency for an action, may be indirectly impacted by the designation of critical habitat, the legally binding duty to avoid destruction or adverse modification of critical habitat rests squarely on the Federal agency.

Civil Justice Reform—Executive Order 12988

In accordance with Executive Order 12988 (Civil Justice Reform), the regulation meets the applicable standards set forth in sections 3(a) and 3(b)(2) of the Order. We are designating critical habitat in accordance with the provisions of the Act. This final rule uses standard property descriptions and identifies the elements of physical and biological features essential to the conservation of the Sonoma California tiger salamander within the designated areas to assist the public in understanding the habitat needs of the species.

Paperwork Reduction Act of 1995 (44 U.S.C. 3501 et seq.)

This rule does not contain any new collections of information that require approval by OMB under the Paperwork Reduction Act of 1995 (44 U.S.C. 3501 *et seq.*). This rule will not impose recordkeeping or reporting requirements on State or local governments, individuals, businesses, or organizations. An agency may not conduct or sponsor, and a person is not required to respond to, a collection of information unless it displays a currently valid OMB control number.

National Environmental Policy Act (42 U.S.C. 4321 et seq.)

It is our position that, outside the jurisdiction of the U.S. Court of Appeals for the Tenth Circuit, we do not need to prepare environmental analyses pursuant to the National Environmental Policy Act (NEPA; 42 U.S.C. 4321 *et seq.*) in connection with designating critical habitat under the Act. We published a notice outlining our reasons for this determination in the **Federal Register** on October 25, 1983 (48 FR 49244). This position was upheld by the U.S. Court of Appeals for the Ninth Circuit (*Douglas County* v. *Babbitt,* 48 F.3d 1495 (9th Cir. 1995), cert. denied 516 U.S. 1042 (1996)).

Government-to-Government Relationship With Tribes

In accordance with the President's memorandum of April 29, 1994 (Government-to-Government Relations with Native American Tribal Governments; 59 FR 22951), Executive Order 13175 (Consultation and Coordination With Indian Tribal Governments), and the Department of the Interior's manual at 512 DM 2, we readily acknowledge our responsibility to communicate meaningfully with recognized Federal Tribes on a government-to-government basis. In accordance with Secretarial Order 3206 of June 5, 1997 (American Indian Tribal Rights, Federal-Tribal Trust Responsibilities, and the Endangered Species Act), we readily acknowledge our responsibilities to work directly with tribes in developing programs for healthy ecosystems, to acknowledge that tribal lands are not subject to the same controls as Federal public lands, to remain sensitive to Indian culture, and to make information available to tribes.

There are tribal lands determined to be occupied with features essential to the conservation of the Sonoma California tiger salamander, but these lands have been excluded under section 4(b)(2) of the Act (see Exclusions section above).

References Cited

A complete list of all references cited is available on the Internet at *http://www.regulations.gov* and upon request from the Sacramento Fish and Wildlife Office (see **FOR FURTHER INFORMATION CONTACT**).

Authors

The primary authors of this rulemaking are the staff members of the Sacramento Fish and Wildlife Office.

List of Subjects in 50 CFR Part 17

Endangered and threatened species, Exports, Imports, Reporting and recordkeeping requirements, Transportation.

Regulation Promulgation

Accordingly, we amend part 17, subchapter B of chapter I, title 50 of the Code of Federal Regulations, as set forth below:

PART 17—[AMENDED]

■ 1. The authority citation for part 17 continues to read as follows:

Authority: 16 U.S.C. 1361–1407; 16 U.S.C. 1531–1544; 16 U.S.C. 4201–4245; Pub. L. 99–625, 100 Stat. 3500; unless otherwise noted.

■ 2. Amend § 17.11(h) by revising the entry for ''Salamander, California tiger'' under ''AMPHIBIANS'' in the List of Endangered and Threatened Wildlife to read as follows:

§ 17.11 Endangered and threatened wildlife.

* * * * *

(h) * * *

Species		Historic range	Vertebrate population where endangered or threatened	Status	When listed	Critical habitat	Special rules
Common name	Scientific name						
*	*	*	*	*	*		*
AMPHIBIANS							
*	*	*	*	*	*		*
Salamander, California tiger.	*Ambystoma californiense.*	*U.S.A. (CA)*	*U.S.A. (CA—Santa Barbara County).*	*E*	*677E, 702*	*17.95(d)*	*NA.*
Salamander, California tiger.	*Ambystoma californiense.*	*U.S.A. (CA)*	*U.S.A. (CA—Central California).*	*T*	*744*	*17.95(d)*	*17.43(c).*
Salamander, California tiger.	*Ambystoma californiense.*	*U.S.A. (CA)*	*U.S.A. (CA—Sonoma County).*	*E*	*729E, 734*	*17.95(d)*	*NA.*
*	*	*	*	*	*		*

■ 3. In § 17.95, amend paragraph (d) by adding an entry for ''California Tiger Salamander (*Ambystoma californiense*) in Sonoma County'' in the same order that the species appears in the table at § 17.11(h), to read as follows:

§ 17.95 Critical habitat—fish and wildlife.

* * * * *

(d) *Amphibians.*

* * * * *

California Tiger Salamander *(Ambystoma californiense)*

* * * * *

California Tiger Salamander (*Ambystoma californiense*) in Sonoma County

(52) The critical habitat unit for Sonoma County, CA, is depicted on the map at paragraph (56)(ii) of this entry.

(53) Within these areas, the primary constituent elements of the physical and biological features essential to the conservation of the California tiger salamander in Sonoma County consist of three components:

(i) Standing bodies of fresh water (including natural and manmade (*e.g.,* stock)) ponds, vernal pools, and other ephemeral or permanent water bodies) that typically support inundation during winter and early spring, and hold water for a minimum of 12 consecutive weeks in a year of average rainfall.

(ii) Upland habitats adjacent to and accessible from breeding ponds that contain small mammal burrows or other underground refugia that the species depends upon for food, shelter, and protection from the elements and predation.

(iii) Accessible upland dispersal habitat between locations occupied by the species that allow for movement between such sites.

(54) Critical habitat does not include manmade structures (such as buildings, aqueducts, runways, roads, and other paved areas) and the land on which they are located existing within the legal boundaries on the effective date of this rule.

(55) *Critical habitat map unit.* Data layers defining the map unit were created on a base of USGS 7.5′ quadrangles, and the critical habitat unit was then mapped using Universal Transverse Mercator (UTM) Zone 10N coordinates.

(56) Santa Rosa Plain Unit, Sonoma County, California.

(i) From USGS 1:24,000 quadrangle map Healdsburg, Sebastopol, Santa Rosa, Two Rock, Cotati, Petaluma, and Mark West Springs, California. Land bounded by the following UTM Zone 10N, North American Datum of 1983 (NAD83) coordinates (E, N): 515958, 4264938; 515962, 4264053; 515984, 4264053; 516127, 4264065; 516297, 4264083; 516355, 4264107; 516437, 4264134; 517201, 4264161; 517204, 4263316; 517184, 4263318; 517153, 4263345; 517102, 4263370; 517041, 4263383; 517026, 4263378; 516978, 4263360; 516950, 4263341; 516560, 4263330; 516550, 4263241; 516566, 4263225; 516596, 4263103; 516603, 4262920; 516639, 4262756; 516882, 4262184; 517289, 4261332; 517321, 4261275; 517412, 4261284; 517483, 4261292; 517708, 4261351; 517696, 4261470; 517729, 4261546; 517837, 4261601; 517897, 4261604; 518065, 4261551; 518158, 4261611; 518347, 4261695; 518446, 4261706; 518489, 4261763; 518681, 4261928; 518753, 4262034; 518804, 4262020; 518835, 4261981; 518917, 4261963; 519050, 4261983; 519174, 4262054; 519258, 4262077; 519354, 4262188; 519440, 4262142; 519490, 4262146; 519523, 4262261; 519601, 4262282; 519821, 4262275; 520947, 4261147; 521211, 4260905; 521220, 4260905; 521224, 4260890; 522751, 4259527; 522746, 4259517; 522746, 4259517; 522498, 4259511; 522499, 4259466; 522269, 4259465; 522054, 4259463; 522053, 4259665; 521895, 4259659; 521692, 4259652; 521697, 4259307; 521335, 4259298; 521336, 4259239; 521137, 4259235; 521138, 4259168; 521074, 4259170; 521166, 4259038; 521133, 4259035; 521189, 4258952; 521439, 4258587; 521509, 4258484; 521488, 4258481; 521416, 4258480; 521319, 4258480; 521182, 4258479; 521130, 4258476; 521104, 4258466; 521079, 4258449; 521063, 4258423; 521031, 4258396; 521012, 4258374; 520991, 4258352; 520960, 4258333; 520933, 4258341; 520923, 4258339; 520483, 4258336; 520486, 4257976; 520286, 4257974; 520286, 4257923; 520076, 4257921; 520076, 4257655; 520084, 4256913; 520089, 4255250; 519469, 4255249; 519468, 4255235; 519494, 4255223; 519509, 4255204; 519606, 4255119; 519608, 4254429; 519689, 4254430; 519681, 4253613; 519951, 4253613; 519952, 4253112; 520124, 4253213; 520204, 4253261; 520317, 4253313; 520424, 4253357; 520455, 4253364; 520495, 4253368; 520561, 4253373; 520664, 4253381; 520882, 4253399; 521157, 4253422; 521721, 4253471; 522039, 4253501; 522283, 4253533; 522398, 4253561; 522702, 4253659; 522794, 4253687; 523132, 4253743; 523335, 4253777; 523620, 4253831; 523903, 4253883; 523985, 4253642; 524334, 4253725; 524339, 4253163; 524347, 4252679; 524679, 4252724; 524674, 4252887; 524869,

4252913; 524860, 4252818; 524841, 4252674; 524824, 4252615; 524821, 4252524; 524819, 4252424; 524804, 4252370; 524789, 4252322; 524786, 4252230; 524785, 4252071; 524783, 4251757; 524782, 4251416; 524775, 4250427; 524819, 4250415; 525034, 4250436; 525188, 4250226; 525230, 4250293; 525249, 4250591; 525431, 4250592; 525427, 4251250; 525524, 4251251; 525516, 4251382; 525608, 4251435; 525606, 4251596; 525590, 4251596; 525585, 4251704; 525793, 4251706; 525799, 4251564; 525805, 4251491; 525823, 4251438; 525853, 4251375; 525897, 4251317; 525955, 4251247; 525991, 4251204; 526055, 4251122; 526081, 4251084; 526093, 4251068; 526098, 4251059; 526187, 4250895; 526242, 4250791; 526303, 4250656; 526414, 4250450; 526491, 4250305; 526565, 4250168; 526626, 4250055; 526640, 4250027; 526668, 4249975; 526681, 4249951; 526739, 4249844; 526883, 4249511; 527003, 4249235; 527144, 4248912; 527258, 4248648; 527321, 4248504; 527380, 4248408; 527440, 4248306; 527498, 4248233; 527541, 4248179; 527567, 4248146; 527591, 4248116; 527670, 4248094; 528274, 4247630; 528624, 4247465; 528892, 4247336; 528892, 4247336; 528934, 4247301; 528969, 4247271; 529006, 4247230; 528260, 4247180; 527910, 4247172; 527460, 4247161; 527439, 4247159; 527057, 4247158; 526768, 4247152; 526640, 4247144; 526240, 4247140; 526244, 4246930; 526243, 4246848; 525406, 4246839; 525373, 4246838; 525370, 4246838; 525128, 4246839; 525070, 4246841; 525090, 4246766; 525100, 4246710; 525107, 4246661; 525111, 4246582; 525106, 4246526; 525103, 4246500; 525097, 4246473; 525082, 4246451; 525067, 4246414; 525065, 4246315; 525055, 4246235; 525037, 4246098; 525037, 4245942; 525017, 4245837; 525022, 4245567; 525015, 4245313; 525028, 4245041; 525028, 4245041; 525028, 4245040; 525023, 4244756; 525024, 4244737; 525018, 4244737; 524971, 4244646; 524751, 4244643; 524749, 4244670; 524755, 4244695; 524764, 4244722; 524369, 4244718; 524367, 4244750; 524362, 4244781; 524342, 4244829; 524341, 4245039; 524330, 4245147; 524327, 4245304; 524266, 4245304; 523930, 4245300; 523936, 4245291; 523897, 4245221; 523830, 4245259; 523800, 4245206; 523740, 4245165; 523901, 4245442; 524073, 4245457; 524091, 4245470; 524090, 4245550; 524531, 4245557; 524528, 4245929; 524350, 4245930; 524349, 4246155; 524005, 4246155; 524008, 4245557; 523064, 4245550; 523009, 4245549; 522605, 4245550; 522607, 4245039; 522605, 4244956; 522642, 4244950; 522752, 4244931; 522868, 4244924; 522938, 4244910; 523037, 4244867; 523092, 4244862; 523170, 4244827; 523539, 4244841; 523486, 4244744; 523526, 4244718; 523515, 4244700; 523503, 4244684; 523489, 4244674; 523600, 4244617; 523686, 4244589; 523794, 4244556; 523847, 4244556; 523927, 4244556; 523946, 4244554; 523963, 4244555; 523971, 4244550; 523978, 4244550; 523983, 4244463; 523974, 4244457; 524015, 4244405; 524037, 4244364; 524074, 4244278; 524112, 4244184; 524124, 4244185; 524145, 4244134; 524133, 4244134; 524179, 4244019; 524229, 4243956; 524256, 4243896; 524268, 4243881; 524311, 4243849; 524377, 4243813; 524451, 4243774; 524531, 4243736; 524592, 4243702; 524672, 4243653; 524733, 4243603; 524782, 4243553; 524832, 4243496; 524866, 4243439; 524919, 4243340; 525003, 4243271; 525069, 4243234; 525096, 4243229; 525119, 4243187; 525134, 4243089; 525146, 4243127; 525176, 4243074; 525246, 4243058; 525344, 4243040; 525385, 4243015; 525463, 4242950; 525479, 4242931; 525509, 4242834; 525460, 4242825; 525371, 4242803; 525371, 4242802; 525379, 4242766; 525384, 4242743; 525383, 4242743; 525329, 4242726; 525328, 4242725; 525328, 4242725; 525327, 4242702; 525360, 4242636; 525303, 4242593; 525304, 4242592; 525343, 4242551; 525427, 4242434; 525530, 4242293; 525529, 4242292; 525437, 4242100; 525302, 4242095; 525148, 4242150; 525112, 4242171; 525113, 4242274; 525119, 4242395; 525089, 4242387; 525049, 4242372; 524969, 4242324; 524962, 4242281; 524947, 4242224; 524948, 4242224; 524947, 4242223; 524994, 4242202; 525048, 4242178; 525049, 4242178; 525026, 4242101; 525003, 4242023; 525002, 4242021; 525052, 4241984; 525054, 4241931; 525126, 4241920; 525203, 4241893; 525277, 4241865; 525324, 4241932; 525379, 4241928; 525379, 4241929; 525380, 4241956; 525380, 4241956; 525554, 4241888; 525554, 4241888; 525539, 4241824; 525539, 4241823; 525586, 4241824; 525627, 4241826; 525678, 4241828; 525726, 4241824; 525790, 4241828; 525856, 4241844; 525937, 4241764; 525995, 4241707; 526035, 4241679; 526122, 4241751; 526218, 4241829; 526262, 4241807; 526337, 4241783; 526337, 4241783; 526330, 4241715; 526330, 4241714; 526328, 4241646; 526326, 4241597; 526325, 4241545; 526322, 4241543; 526196, 4241529; 526088, 4241515; 526058, 4241446; 525835, 4241237; 525878, 4241186; 525929, 4241234; 526000, 4241164; 525944, 4241110; 526019, 4241039; 526225, 4241236; 526254, 4241213; 526341, 4241295; 526335, 4241343; 526362, 4241340; 526456, 4241156; 526583, 4241157; 526586, 4241207; 526641, 4241208; 526600, 4241344; 526835, 4241346; 526964, 4241346; 527206, 4241345; 527271, 4241234; 527694, 4241231; 527592, 4241427; 527606, 4241441; 527762, 4241442; 527835, 4241474; 527894, 4241465; 527957, 4241438; 527971, 4241442; 527990, 4241432; 528042, 4241446; 528057, 4241467; 528090, 4241479; 528112, 4241514; 528293, 4241521; 528334, 4241542; 528322, 4241944; 529126, 4241952; 529136, 4242368; 529942, 4242371; 529961, 4241555; 530777, 4241576; 531213, 4241584; 531213, 4241584; 531212, 4241577; 531212, 4241565; 531213, 4241561; 531213, 4241549; 531214, 4241539; 531215, 4241530; 531216, 4241522; 531218, 4241515; 531222, 4241496; 531224, 4241491; 531235, 4241477; 531243, 4241467; 531247, 4241462; 531252, 4241459; 531148, 4241274; 531128, 4241282; 531001, 4241056; 531012, 4241049; 530840, 4240755; 530599, 4240752; 530599, 4240760; 530453, 4240760; 530220, 4240758; 529960, 4240755; 529954, 4240737; 529962, 4240737; 529964, 4240304; 529560, 4240298; 529560, 4240279; 529286, 4240278; 529161, 4240277; 529138, 4240274; 529138, 4240269; 528996, 4240267; 528747, 4240266; 528751, 4239945; 528653, 4239944; 528546, 4239942; 528546, 4239933; 528471, 4239934; 528345, 4239934; 528210, 4239938; 528211, 4239926; 528216, 4239911; 528224, 4239898; 528225, 4239884; 528244, 4239861; 528263, 4239839; 528260, 4239802; 528257, 4239766; 528281, 4239737; 528299, 4239674; 528329, 4239644; 528365, 4239626; 528395, 4239588; 528396, 4239547; 528383, 4239522; 528383, 4239486; 528467, 4239395; 528470, 4239382; 528523, 4239327; 528572, 4239220; 528638, 4239134; 528715, 4239051; 528789, 4239013; 528842, 4238970; 528867, 4238967; 528944, 4238985; 528977, 4238975; 529035, 4238937; 529061, 4238859; 529089, 4238805; 529168, 4238719; 529186, 4238674; 529202, 4238476; 529222, 4238445; 529288, 4238428; 529319, 4238410; 529342, 4238380; 529390, 4238342; 529398, 4238248; 529355, 4238131; 529353, 4238088; 529366, 4238055; 529366, 4237940; 529346, 4237894; 529298, 4237833; 529298, 4237760; 529288, 4237747; 529227, 4237726; 529225, 4237706; 529255, 4237671; 529266, 4237633; 529301, 4237587; 529301,

4237556; 529301, 4237556; 529279, 4237513; 529274, 4237478; 529243, 4237442; 529227, 4237415; 529195, 4237363; 529179, 4237303; 529147, 4237180; 529122, 4237089; 529110, 4237044; 529098, 4236997; 529075, 4236959; 528986, 4236865; 528941, 4236847; 528883, 4236797; 528802, 4236726; 528710, 4236645; 528690, 4236643; 528624, 4236663; 528504, 4236630; 528443, 4236614; 528428, 4236598; 528382, 4236524; 528114, 4236779; 527845, 4237034; 527644, 4237225; 527577, 4237288; 527528, 4237336; 527477, 4237364; 527408, 4237403; 527356, 4237414; 527314, 4237418; 527267, 4237416; 527136, 4237408; 526957, 4237397; 526778, 4237386; 526511, 4237369; 525796, 4237326; 525255, 4237292; 525065, 4237280; 524935, 4237298; 524704, 4237329; 524459, 4237362; 524276, 4237392; 524216, 4237396; 524156, 4237400; 524096, 4237396; 523962, 4237391; 523863, 4237390; 523790, 4237390; 523736, 4237379; 523735, 4237378; 523735, 4237378; 523701, 4237372; 523334, 4237331; 523124, 4237315; 522752, 4237325; 522523, 4237483; 522330, 4237495; 522203, 4237501; 522091, 4237502; 522019, 4237486; 521903, 4237456; 521751, 4237374; 521416, 4237245; 520924, 4237058; 520715, 4236933; 520469, 4236563; 519656, 4236570; 519591, 4236725; 519597, 4236804; 519593, 4236893; 519534, 4236982; 519509, 4237065; 519513, 4237207; 519519, 4237410; 519508, 4237513; 519513, 4237560; 519644, 4237689; 519749, 4237854; 519828, 4238299; 519985, 4238796; 520064, 4239163; 519666, 4239301; 519083, 4239251; 518726, 4239185; 518455, 4238949; 518408, 4238918; 517833, 4238941; 517755, 4238933; 515591, 4239010; 515470, 4239008; 515452, 4239009; 515449, 4239056; 515449, 4239057; 515449, 4239057; 515450, 4239095; 515435, 4241446; 515745, 4241442; 515750, 4241442; 515751, 4241441; 515960, 4241437; 515958, 4241650; 515958, 4241650; 516184, 4241647; 516184, 4241649; 516476, 4241982; 516591, 4242098; 516629, 4242123; 516629, 4242123; 516631, 4242125; 516616, 4243019; 516964, 4243034; 516961, 4243299; 516961, 4243299; 516957, 4243382; 518721, 4243366; 519748, 4243368; 520411, 4243363; 520380, 4245219; 520274, 4245428; 520129, 4245551; 520127, 4245552; 520176, 4245594; 520200, 4245630; 520181, 4246130; 520221, 4246427; 520220, 4246428; 520222, 4246456; 520222, 4246517; 520223, 4246579; 520222, 4246577; 520225, 4246616; 520221, 4246774; 520214, 4246852; 520205, 4246990; 520193, 4247283; 520121, 4247294; 519763, 4247380; 519748, 4247387; 519735, 4247394; 519727, 4247398; 519712, 4247402; 519636, 4247424; 519580, 4247425; 519530, 4247389; 519523, 4247381; 519515, 4247373; 519516, 4247360; 519507, 4247387; 519510, 4247395; 519516, 4247404; 519492, 4247437; 519486, 4247445; 519460, 4247491; 519453, 4247503; 519413, 4247571; 519400, 4247572; 519392, 4247573; 519388, 4247574; 519381, 4247575; 519366, 4247575; 519354, 4247574; 519339, 4247574; 519327, 4247575; 519316, 4247573; 519308, 4247574; 519287, 4247574; 519270, 4247582; 519252, 4247584; 519230, 4247590; 519203, 4247598; 519197, 4247600; 519163, 4247609; 519146, 4247617; 519125, 4247627; 519108, 4247645; 519097, 4247661; 519086, 4247673; 519070, 4247700; 519062, 4247717; 519062, 4247719; 519048, 4247747; 519031, 4247780; 519020, 4247811; 519005, 4247851; 519002, 4247866; 519000, 4247897; 519000, 4247919; 519006, 4247954; 519015, 4247972; 519028, 4248004; 519034, 4248019; 519043, 4248041; 519053, 4248080; 519061, 4248112; 519064, 4248129; 519062, 4248151; 519062, 4248175; 519061, 4248206; 519062, 4248223; 519065, 4248240; 519068, 4248257; 519071, 4248266; 519082, 4248290; 519092, 4248307; 519105, 4248328; 519115, 4248342; 519121, 4248350; 519133, 4248363; 519150, 4248374; 519173, 4248386; 519199, 4248394; 519228, 4248404; 519259, 4248418; 519292, 4248430; 519316, 4248442; 519340, 4248450; 519375, 4248465; 519399, 4248482; 519402, 4248484; 519412, 4248498; 519413, 4248508; 519411, 4248514; 519407, 4248523; 519400, 4248533; 519377, 4248549; 519369, 4248556; 519350, 4248568; 519331, 4248574; 519311, 4248577; 519285, 4248588; 519259, 4248597; 519238, 4248613; 519211, 4248626; 519200, 4248632; 519173, 4248642; 519128, 4248660; 519102, 4248670; 519084, 4248674; 519051, 4248679; 519033, 4248678; 519021, 4248676; 519003, 4248674; 518982, 4248668; 518950, 4248662; 518918, 4248659; 518880, 4248664; 518859, 4248670; 518849, 4248679; 518850, 4248689; 518854, 4248697; 518863, 4248703; 518876, 4248715; 518888, 4248724; 518900, 4248738; 518912, 4248748; 518935, 4248765; 518951, 4248781; 518967, 4248801; 518983, 4248821; 518994, 4248838; 519000, 4248851; 519003, 4248869; 519003, 4248885; 519003, 4248895; 519002, 4248911; 518997, 4248935; 518995, 4248960; 518993, 4249001; 518994, 4249018; 518999, 4249034; 519006, 4249056; 519018, 4249078; 519033, 4249094; 519052, 4249108; 519073, 4249118; 519095, 4249127; 519122, 4249133; 519151, 4249136; 519182, 4249140; 519203, 4249137; 519230, 4249137; 519257, 4249144; 519263, 4249153; 519261, 4249160; 519257, 4249165; 519248, 4249176; 519236, 4249188; 519223, 4249202; 519204, 4249216; 519188, 4249230; 519170, 4249239; 519156, 4249244; 519133, 4249246; 519114, 4249245; 519101, 4249244; 519078, 4249244; 519044, 4249248; 519006, 4249259; 518990, 4249263; 518975, 4249271; 518960, 4249285; 518945, 4249303; 518925, 4249330; 518918, 4249344; 518912, 4249356; 518904, 4249366; 518896, 4249372; 518883, 4249382; 518860, 4249391; 518834, 4249400; 518813, 4249410; 518796, 4249422; 518779, 4249435; 518756, 4249447; 518708, 4249473; 518687, 4249484; 518674, 4249489; 518659, 4249491; 518647, 4249488; 518627, 4249486; 518608, 4249488; 518588, 4249498; 518576, 4249507; 518563, 4249519; 518557, 4249528; 518554, 4249536; 518549, 4249551; 518543, 4249563; 518534, 4249575; 518519, 4249586; 518501, 4249598; 518482, 4249605; 518468, 4249608; 518444, 4249616; 518420, 4249617; 518400, 4249621; 518380, 4249625; 518365, 4249632; 518355, 4249641; 518336, 4249649; 518300, 4249652; 518283, 4249657; 518256, 4249654; 518226, 4249648; 518201, 4249643; 518179, 4249642; 518167, 4249643; 518156, 4249646; 518147, 4249652; 518137, 4249663; 518126, 4249680; 518118, 4249700; 518107, 4249723; 518096, 4249744; 518090, 4249766; 518082, 4249783; 518078, 4249801; 518079, 4249819; 518081, 4249836; 518087, 4249854; 518099, 4249867; 518116, 4249879; 518130, 4249882; 518147, 4249886; 518168, 4249897; 518178, 4249912; 518181, 4249925; 518182, 4249941; 518188, 4249951; 518194, 4249958; 518200, 4249963; 518206, 4249973; 518209, 4249982; 518209, 4249993; 518209, 4250008; 518213, 4250022; 518221, 4250029; 518228, 4250036; 518232, 4250050; 518228, 4250060; 518224, 4250063; 518217, 4250066; 518207, 4250067; 518190, 4250068; 518170, 4250070; 518153, 4250076; 518135, 4250081; 518121, 4250090; 518111, 4250108; 518107, 4250122; 518105, 4250135; 518102, 4250158; 518103, 4250172; 518107, 4250185; 518114, 4250209; 518117, 4250226; 518122, 4250252; 518132, 4250277; 518132, 4250278; 518112, 4250325; 518055, 4250363; 517988, 4250366; 517977, 4250346; 517965, 4250330; 517948, 4250308; 517940,

4250287; 517937, 4250266; 517933, 4250250; 517929, 4250224; 517924, 4250194; 517915, 4250171; 517895, 4250133; 517879, 4250105; 517870, 4250095; 517843, 4250074; 517822, 4250056; 517800, 4250030; 517751, 4249994; 517728, 4249974; 517697, 4249961; 517677, 4249957; 517648, 4249949; 517633, 4249949; 517612, 4249951; 517586, 4249958; 517574, 4249969; 517561, 4249984; 517555, 4249996; 517542, 4250025; 517538, 4250043; 517527, 4250075; 517524, 4250091; 517523, 4250104; 517527, 4250125; 517534, 4250146; 517541, 4250174; 517544, 4250201; 517543, 4250225; 517538, 4250250; 517529, 4250276; 517520, 4250301; 517506, 4250334; 517492, 4250364; 517479, 4250404; 517472, 4250419; 517468, 4250433; 517459, 4250447; 517449, 4250459; 517438, 4250461; 517428, 4250457; 517419, 4250450; 517408, 4250441; 517394, 4250434; 517374, 4250425; 517349, 4250416; 517330, 4250419; 517319, 4250428; 517303, 4250447; 517295, 4250457; 517279, 4250480; 517274, 4250487; 517266, 4250499; 517256, 4250522; 517253, 4250541; 517248, 4250557; 517244, 4250576; 517234, 4250597; 517224, 4250626; 517220, 4250646; 517222, 4250669; 517237, 4250695; 517254, 4250710; 517274, 4250721; 517290, 4250725; 517313, 4250729; 517334, 4250731; 517366, 4250729; 517395, 4250729; 517426, 4250730; 517453, 4250737; 517487, 4250743; 517508, 4250749; 517536, 4250763; 517567, 4250782; 517596, 4250802; 517625, 4250823; 517660, 4250848; 517683, 4250876; 517693, 4250895; 517699, 4250918; 517699, 4250918; 517672, 4251014; 517615, 4251099; 517523, 4251133; 517519, 4251137; 517499, 4251131; 517481, 4251127; 517469, 4251123; 517458, 4251121; 517434, 4251121; 517420, 4251125; 517405, 4251128; 517393, 4251126; 517383, 4251122; 517369, 4251114; 517354, 4251109; 517328, 4251099; 517301, 4251096; 517282, 4251090; 517264, 4251082; 517245, 4251076; 517219, 4251065; 517180, 4251059; 517157, 4251056; 517124, 4251047; 517094, 4251042; 517082, 4251040; 517065, 4251040; 517051, 4251044; 517034, 4251048; 517018, 4251048; 517001, 4251047; 516975, 4251041; 516962, 4251037; 516950, 4251032; 516931, 4251022; 516917, 4251017; 516898, 4251012; 516879, 4251011; 516860, 4251009; 516837, 4251006; 516828, 4251012; 516822, 4251023; 516819, 4251036; 516819, 4251049; 516820, 4251061; 516822, 4251076; 516823, 4251089; 516821, 4251105; 516815, 4251120; 516805, 4251129; 516792, 4251137; 516780, 4251137; 516757, 4251138; 516742, 4251141; 516730, 4251137; 516712, 4251132; 516689, 4251125; 516660, 4251114; 516647, 4251115; 516610, 4251118; 516579, 4251128; 516566, 4251138; 516561, 4251150; 516559, 4251160; 516558, 4251172; 516560, 4251187; 516560, 4251206; 516566, 4251226; 516564, 4251240; 516563, 4251242; 516558, 4251252; 516551, 4251263; 516546, 4251280; 516545, 4251299; 516549, 4251318; 516555, 4251333; 516565, 4251340; 516577, 4251350; 516588, 4251363; 516589, 4251379; 516585, 4251390; 516577, 4251405; 516567, 4251418; 516554, 4251433; 516538, 4251450; 516522, 4251474; 516515, 4251493; 516508, 4251518; 516504, 4251543; 516501, 4251576; 516499, 4251607; 516499, 4251634; 516507, 4251662; 516518, 4251678; 516529, 4251689; 516547, 4251695; 516561, 4251699; 516579, 4251702; 516595, 4251705; 516612, 4251712; 516622, 4251720; 516636, 4251733; 516636, 4251735; 516639, 4251861; 516588, 4251964; 516582, 4251968; 516572, 4251977; 516561, 4251993; 516558, 4251999; 516445, 4252055; 516283, 4252064; 516281, 4252065; 516280, 4252065; 516274, 4252064; 516264, 4252061; 516255, 4252058; 516243, 4252051; 516234, 4252042; 516215, 4252023; 516202, 4252010; 516185, 4252002; 516177, 4252001; 516156, 4251996; 516136, 4251991; 516115, 4251992; 516098, 4251999; 516083, 4252014; 516073, 4252031; 516071, 4252047; 516071, 4252057; 516070, 4252069; 516070, 4252083; 516067, 4252094; 516062, 4252102; 516055, 4252112; 516048, 4252123; 516042, 4252140; 516039, 4252151; 516036, 4252159; 516028, 4252165; 516025, 4252167; 516015, 4252170; 516002, 4252171; 515992, 4252178; 515986, 4252185; 515980, 4252188; 515968, 4252186; 515964, 4252180; 515963, 4252182; 515936, 4252199; 515936, 4252199; 515936, 4252212; 515932, 4252230; 515931, 4252247; 515938, 4252261; 515952, 4252274; 515967, 4252289; 515985, 4252310; 515998, 4252330; 516007, 4252353; 516024, 4252380; 516033, 4252395; 516034, 4252408; 516034, 4252417; 516031, 4252429; 516026, 4252444; 516022, 4252463; 516020, 4252487; 516022, 4252496; 516027, 4252519; 516036, 4252541; 516038, 4252554; 516033, 4252557; 516024, 4252554; 516019, 4252552; 516008, 4252545; 515999, 4252536; 515990, 4252528; 515979, 4252523; 515963, 4252524; 515949, 4252528; 515933, 4252533; 515923, 4252536; 515913, 4252534; 515901, 4252528; 515890, 4252521; 515871, 4252513; 515855, 4252502; 515830, 4252490; 515807, 4252484; 515786, 4252478; 515766, 4252478; 515757, 4252479; 515743, 4252490; 515732, 4252506; 515728, 4252515; 515723, 4252529; 515715, 4252540; 515708, 4252546; 515697, 4252548; 515681, 4252549; 515668, 4252554; 515652, 4252574; 515644, 4252590; 515630, 4252614; 515614, 4252640; 515606, 4252661; 515603, 4252673; 515604, 4252687; 515607, 4252699; 515613, 4252724; 515612, 4252731; 515607, 4252735; 515601, 4252735; 515592, 4252734; 515582, 4252731; 515567, 4252724; 515553, 4252716; 515533, 4252705; 515515, 4252701; 515500, 4252704; 515485, 4252707; 515461, 4252728; 515444, 4252747; 515435, 4252761; 515426, 4252780; 515426, 4252793; 515429, 4252808; 515436, 4252825; 515445, 4252845; 515457, 4252861; 515474, 4252882; 515479, 4252889; 515485, 4252899; 515485, 4252909; 515484, 4252920; 515480, 4252935; 515480, 4252952; 515480, 4252967; 515483, 4252984; 515485, 4252998; 515484, 4253007; 515480, 4253016; 515474, 4253025; 515465, 4253032; 515453, 4253041; 515438, 4253056; 515425, 4253070; 515415, 4253085; 515414, 4253100; 515418, 4253116; 515424, 4253124; 515439, 4253136; 515453, 4253141; 515467, 4253144; 515489, 4253149; 515503, 4253160; 515504, 4253160; 515515, 4253170; 515543, 4253187; 515558, 4253194; 515575, 4253200; 515595, 4253206; 515624, 4253211; 515643, 4253214; 515651, 4253220; 515662, 4253226; 515674, 4253223; 515684, 4253221; 515701, 4253215; 515720, 4253203; 515726, 4253194; 515733, 4253184; 515740, 4253174; 515750, 4253165; 515760, 4253155; 515773, 4253144; 515784, 4253130; 515788, 4253118; 515790, 4253106; 515793, 4253086; 515802, 4253078; 515811, 4253075; 515822, 4253066; 515834, 4253066; 515838, 4253074; 515838, 4253090; 515840, 4253109; 515845, 4253135; 515851, 4253152; 515858, 4253162; 515862, 4253170; 515864, 4253178; 515862, 4253190; 515860, 4253206; 515863, 4253236; 515864, 4253240; 515864, 4253241; 515852, 4253247; 515890, 4253375; 515895, 4253512; 515833, 4253674; 515615, 4253915; 515550, 4253943; 515510, 4253975; 515446, 4254021; 515445, 4254020; 515422, 4254013; 515412, 4254013; 515393, 4254017; 515376, 4254015; 515368, 4254008; 515357, 4253999; 515341, 4253984; 515321, 4253972; 515300, 4253973; 515276, 4253969; 515247, 4253971; 515218, 4253979; 515211, 4253986; 515196, 4254001; 515168, 4254022; 515157,

4254027; 515129, 4254028; 515119, 4254024; 515112, 4254016; 515109, 4254006; 515103, 4253995; 515096, 4253991; 515081, 4253984; 515063, 4253968; 515053, 4253954; 515044, 4253944; 515036, 4253938; 515020, 4253936; 515011, 4253928; 515002, 4253919; 514993, 4253922; 514992, 4253932; 514995, 4253940; 515002, 4253955; 515014, 4253976; 515033, 4254014; 515039, 4254041; 515035, 4254059; 515028, 4254072; 515021, 4254081; 515012, 4254095; 515001, 4254116; 514996, 4254132; 514985, 4254167; 514979, 4254189; 514974, 4254250; 514974, 4254251; 514969, 4254293; 514967, 4254336; 514967, 4254353; 514967, 4254355; 514969, 4254364; 514973, 4254371; 514981, 4254384; 514991, 4254417; 514991, 4254420; 514992, 4254436; 515007, 4254505; 515007, 4254506; 515010, 4254572; 515021, 4254618; 515026, 4254626; 515031, 4254634; 515035, 4254638; 515047, 4254648; 515061, 4254655; 515070, 4254658; 515087, 4254666; 515129, 4254691; 515186, 4254727; 515192, 4254727; 515198, 4254728; 515205, 4254729; 515212, 4254730; 515221, 4254731; 515233, 4254729; 515241, 4254725; 515245, 4254722; 515273, 4254690; 515286, 4254673; 515292, 4254659; 515294, 4254649; 515302, 4254594; 515343, 4254545; 515354, 4254540; 515361, 4254536; 515375, 4254534; 515384, 4254535; 515393, 4254536; 515406, 4254537; 515424, 4254537; 515431, 4254535; 515433, 4254537; 515511, 4254552; 515636, 4254618; 515647, 4254623; 515743, 4254736; 515838, 4254873; 515882, 4255052; 515848, 4255178; 515768, 4255382; 515630, 4255716; 515550, 4255895; 515549, 4255895; 515500, 4255889; 515476, 4255900; 515466, 4255906; 515457, 4255918; 515461, 4255934; 515466, 4255947; 515469, 4255965; 515471, 4255995; 515468, 4256021; 515463, 4256038; 515457, 4256050; 515446, 4256057; 515440, 4256058; 515425, 4256063; 515365, 4256069; 515344, 4256075; 515316, 4256070; 515296, 4256067; 515283, 4256060; 515267, 4256045; 515247, 4256030; 515233, 4256017; 515222, 4256003; 515197, 4255966; 515180, 4255943; 515177, 4255940; 515170, 4255942; 515167, 4255946; 515156, 4255985; 515154, 4256029; 515135, 4256077; 515129, 4256089; 515127, 4256106; 515126, 4256114; 515115, 4256136; 515108, 4256145; 515103, 4256148; 515081, 4256161; 515074, 4256166; 515057, 4256176; 515051, 4256185; 515049, 4256190; 515053, 4256194; 515061, 4256197; 515081, 4256199; 515103, 4256193; 515140, 4256193; 515152, 4256197; 515162, 4256201; 515164, 4256202; 515176, 4256209; 515196, 4256223; 515209, 4256237; 515216, 4256252; 515230, 4256281; 515233, 4256288; 515240, 4256293; 515240, 4256294; 515240, 4256295; 515234, 4256307; 515262, 4256367; 515287, 4256447; 515317, 4256636; 515277, 4256836; 515187, 4256950; 515103, 4257015; 515056, 4257056; 515055, 4257055; 515041, 4257062; 515028, 4257079; 515003, 4257133; 514992, 4257150; 514981, 4257158; 514968, 4257161; 514962, 4257161; 514956, 4257162; 514938, 4257158; 514927, 4257153; 514908, 4257151; 514893, 4257157; 514886, 4257159; 514879, 4257160; 514871, 4257158; 514858, 4257150; 514853, 4257146; 514798, 4257089; 514791, 4257082; 514779, 4257074; 514764, 4257068; 514747, 4257070; 514736, 4257073; 514721, 4257078; 514708, 4257080; 514690, 4257080; 514682, 4257080; 514669, 4257085; 514661, 4257093; 514659, 4257099; 514657, 4257115; 514661, 4257126; 514671, 4257143; 514695, 4257166; 514697, 4257169; 514701, 4257175; 514702, 4257180; 514701, 4257187; 514699, 4257196; 514697, 4257203; 514688, 4257224; 514685, 4257227; 514667, 4257248; 514633, 4257306; 514630, 4257309; 514630, 4257318; 514631, 4257319; 514630, 4257320; 514589, 4257648; 514590, 4257650; 514585, 4257653; 514575, 4257659; 514567, 4257671; 514564, 4257685; 514566, 4257699; 514567, 4257709; 514573, 4257722; 514582, 4257738; 514606, 4257759; 514629, 4257780; 514641, 4257795; 514666, 4257821; 514671, 4257825; 514680, 4257829; 514694, 4257834; 514706, 4257838; 514715, 4257846; 514742, 4257871; 514762, 4257894; 514773, 4257904; 514779, 4257911; 514788, 4257926; 514791, 4257939; 514792, 4257950; 514792, 4257961; 514791, 4257970; 514790, 4257973; 514784, 4257986; 514762, 4258024; 514758, 4258032; 514751, 4258044; 514749, 4258053; 514746, 4258070; 514744, 4258109; 514741, 4258113; 514740, 4258115; 514736, 4258119; 514726, 4258123; 514716, 4258129; 514702, 4258135; 514683, 4258152; 514673, 4258169; 514666, 4258182; 514659, 4258218; 514654, 4258240; 514652, 4258263; 514654, 4258288; 514660, 4258327; 514666, 4258351; 514667, 4258352; 514674, 4258359; 514684, 4258363; 514684, 4258364; 514695, 4258407; 514648, 4258566; 514610, 4258593; 514601, 4258599; 514585, 4258604; 514566, 4258610; 514560, 4258613; 514550, 4258620; 514521, 4258654; 514510, 4258660; 514487, 4258673; 514468, 4258680; 514451, 4258690; 514423, 4258704; 514390, 4258726; 514288, 4258813; 514257, 4258854; 514255, 4258861; 514256, 4258869; 514259, 4258873; 514264, 4258876; 514288, 4258880; 514309, 4258876; 514318, 4258877; 514327, 4258884; 514331, 4258894; 514335, 4258909; 514335, 4258928; 514326, 4258967; 514326, 4258972; 514326, 4258977; 514326, 4258981; 514329, 4258985; 514332, 4258989; 514338, 4258992; 514345, 4258995; 514362, 4258998; 514375, 4258999; 514396, 4258996; 514412, 4258988; 514428, 4258979; 514443, 4258973; 514445, 4258969; 514445, 4258971; 514509, 4258998; 514583, 4259053; 514724, 4259187; 514918, 4259367; 514980, 4259423; 514981, 4259423; 514986, 4259428; 514996, 4259435; 515007, 4259441; 515055, 4259449; 515253, 4259636; 515352, 4259727; 515469, 4259814; 515449, 4259933; 515509, 4260017; 515554, 4260058; 515588, 4260202; 515675, 4260407; 515718, 4260481; 515786, 4260513; 515861, 4260579; 515811, 4260636; 515735, 4260659; 515658, 4260661; 515576, 4260573; 515542, 4260544; 515472, 4260588; 515442, 4260639; 515456, 4260710; 515458, 4260810; 515460, 4260832; 515426, 4260827; 515389, 4260814; 515375, 4260804; 515324, 4260841; 515255, 4260882; 515194, 4260867; 515155, 4260862; 515038, 4260902; 515012, 4260823; 515013, 4260796; 515029, 4260774; 515027, 4260705; 515014, 4260674; 514940, 4260630; 514892, 4260623; 514835, 4260654; 514756, 4260727; 514744, 4260762; 514750, 4260796; 514717, 4260820; 514692, 4260866; 514669, 4260918; 514635, 4260934; 514639, 4260868; 514609, 4260810; 514558, 4260789; 514487, 4260775; 514427, 4260798; 514400, 4260838; 514405, 4260874; 514405, 4260928; 514370, 4260973; 514279, 4261001; 514279, 4260943; 514235, 4260852; 514170, 4260856; 514119, 4260881; 514041, 4260879; 513959, 4260877; 513923, 4260905; 513886, 4260952; 513851, 4260948; 513805, 4260907; 513772, 4260900; 513712, 4260878; 513681, 4260842; 513622, 4260828; 513581, 4260813; 513551, 4260793; 513503, 4260810; 513453, 4260859; 513409, 4260927; 513442, 4260967; 513481, 4261058; 513497, 4261140; 513489, 4261235; 513540, 4261320; 513742, 4261320; 513871, 4261328; 513976, 4261347; 514035, 4261369; 514145, 4261324; 514252, 4261335; 514358, 4261296; 514356, 4261220; 514383, 4261174; 514410, 4261122; 514465, 4261138; 514508, 4261148; 514504, 4261185; 514510, 4261238; 514506, 4261297; 514520, 4261365; 514652,

4261443; 514815, 4261561; 514761, 4261649; 514648, 4261587; 514607, 4261642; 514543, 4261651; 514484, 4261608; 514460, 4261560; 514393, 4261525; 514248, 4261599; 514131, 4261568; 514011, 4261546; 514025, 4261626; 513938, 4261628; 513832, 4261588; 513781, 4261620; 513759, 4261696; 513825, 4261766; 513817, 4261822; 513869, 4261898; 513979, 4261912; 514059, 4261890; 514126, 4261931; 514130, 4262043; 514129, 4262149; 514147, 4262235; 514128, 4262311; 514178, 4262445; 514235, 4262548; 514275, 4262607; 514318, 4262658; 514400, 4262694; 514456, 4262745; 514385, 4262802; 514383, 4262890; 514370, 4262964; 514448, 4263138; 514593, 4263244; 514650, 4263341; 514707, 4263450; 514720, 4263519; 514893, 4263564; 515032, 4263626; 515101, 4263688; 515209, 4263765; 515238, 4263930; 515138, 4264007; 515187, 4264092; 515197, 4264212; 515223, 4264267; 515321, 4264382; 515314, 4264453; 515310, 4264485; 515399, 4264533; 515507, 4264589; 515545, 4264608; 515604, 4264714; 515632, 4264739; 515712, 4264751; 515794, 4264773; 515853, 4264796; 515859, 4264834; 515872, 4264900; returning to 515958, 4264938.

(ii) **Note:** Map of Santa Rosa Plain Unit, follows:

BILLING CODE 4310–55–P

* * * * *

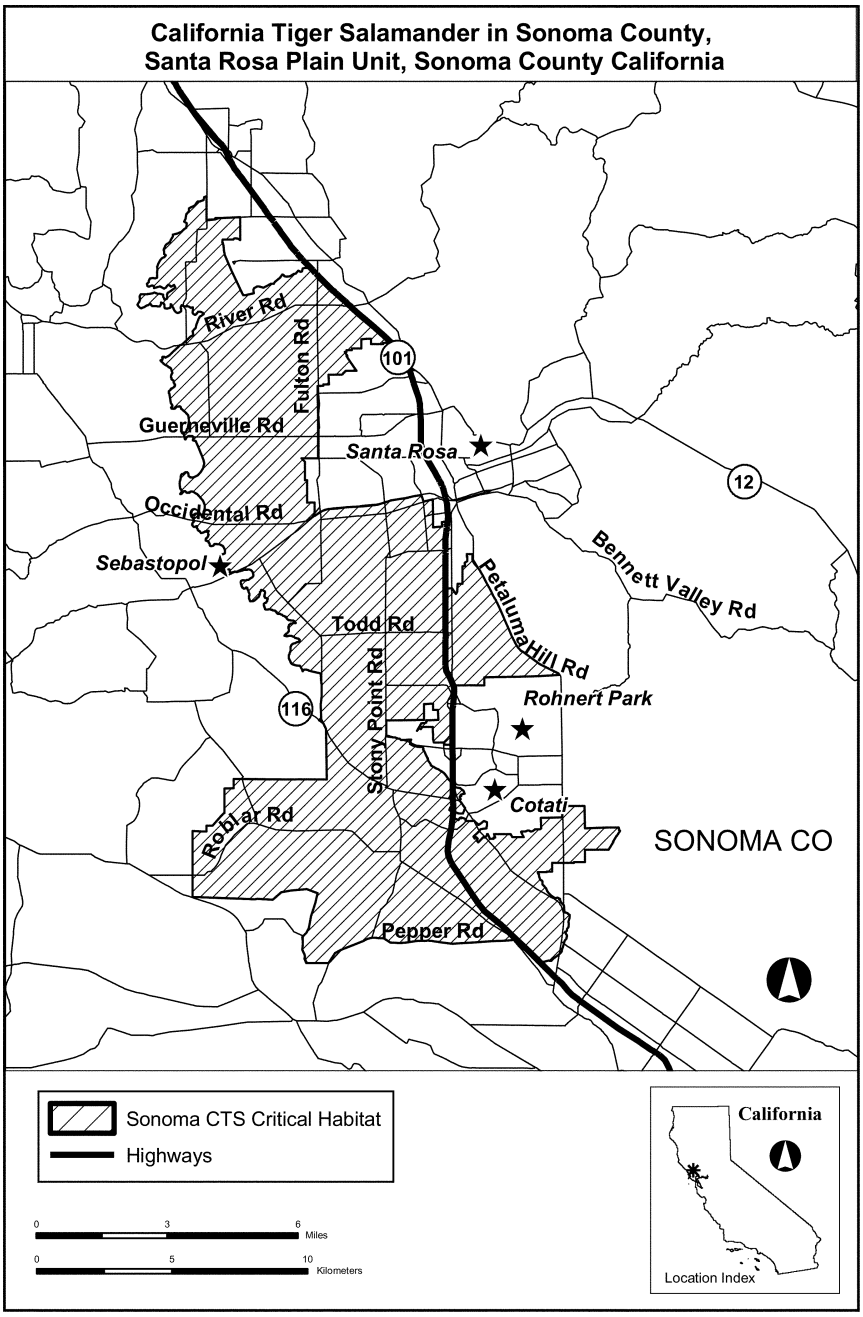

* * * * *

Dated: August 17, 2011.

Rachel Jacobson,

Acting Assistant Secretary for Fish and Wildlife and Parks.

[FR Doc. 2011–21945 Filed 8–30–11; 8:45 am]

BILLING CODE 4310–55–C

Reader Aids

Federal Register

Vol. 76, No. 169

Wednesday, August 31, 2011

CUSTOMER SERVICE AND INFORMATION

Federal Register/Code of Federal Regulations	
General Information, indexes and other finding aids	**202–741–6000**
Laws	**741–6000**
Presidential Documents	
Executive orders and proclamations	**741–6000**
The United States Government Manual	**741–6000**
Other Services	
Electronic and on-line services (voice)	**741–6020**
Privacy Act Compilation	**741–6064**
Public Laws Update Service (numbers, dates, etc.)	**741–6043**
TTY for the deaf-and-hard-of-hearing	**741–6086**

ELECTRONIC RESEARCH

World Wide Web

Full text of the daily Federal Register, CFR and other publications is located at: **www.fdsys.gov.**

Federal Register information and research tools, including Public Inspection List, indexes, and links to GPO Access are located at: **www.ofr.gov.**

E-mail

FEDREGTOC-L (Federal Register Table of Contents LISTSERV) is an open e-mail service that provides subscribers with a digital form of the Federal Register Table of Contents. The digital form of the Federal Register Table of Contents includes HTML and PDF links to the full text of each document.

To join or leave, go to **http://listserv.access.gpo.gov** and select *Online mailing list archives, FEDREGTOC-L, Join or leave the list (or change settings);* then follow the instructions.

PENS (Public Law Electronic Notification Service) is an e-mail service that notifies subscribers of recently enacted laws.

To subscribe, go to **http://listserv.gsa.gov/archives/publaws-l.html** and select *Join or leave the list (or change settings);* then follow the instructions.

FEDREGTOC-L and **PENS** are mailing lists only. We cannot respond to specific inquiries.

Reference questions. Send questions and comments about the Federal Register system to: **fedreg.infonara.gov**

The Federal Register staff cannot interpret specific documents or regulations.

Reminders. Effective January 1, 2009, the Reminders, including Rules Going Into Effect and Comments Due Next Week, no longer appear in the Reader Aids section of the Federal Register. This information can be found online at **http://www.regulations.gov.**

CFR Checklist. Effective January 1, 2009, the CFR Checklist no longer appears in the Federal Register. This information can be found online at **http://bookstore.gpo.gov/.**

FEDERAL REGISTER PAGES AND DATE, AUGUST

45653–46184 1
46185–46594 2
46595–47054 3
47055–47422 4
47423–47984 5
47985–48712 8
48713–49278 9
49279–49648 10
49649–50110 11
50111–50402 12
50403–50660 15
50661–50880 16
50881–51244 17
51245–51868 18
51869–52208 19
52209–52532 22
52533–52850 23
52851–53044 24
53045–53300 25
53301–53630 26
53631–53810 29
53811–54070 30
54071–54372 31

CFR PARTS AFFECTED DURING AUGUST

At the end of each month the Office of the Federal Register publishes separately a List of CFR Sections Affected (LSA), which lists parts and sections affected by documents published since the revision date of each title.

3 CFR

Proclamations:
8696 46183
8697 49277
8698 49647
8699 53809

Executive Orders:
13582 52209
13583 52847

Administrative Orders:
Notices:
Notice of July 28, 2011 45653
Notice of August 12, 2011 50661
Presidential Determinations:
No. 2011–12 of August 8, 2011 53297
No. 2011–13 of August 10, 2011 53299

5 CFR

293 52533
315 54071
532 ..... 52537, 53045
550 52537
843 52539

Proposed Rules:
213 47495
250 47516
302 47495
315 47495
330 47495
334 47495
362 47495
530 45710
531 ..... 45710, 47495
536 ..... 45710, 47495
550 47495
575 47495
733 52287
890 47495

6 CFR

Proposed Rules:
31 46908

7 CFR

2 52851
205 46595
301 ..... 52541, 52543
319 52544
760 54072
927 ..... 53811, 54075
946 48713
993 53813
1205 54078
1217 ..... 46185, 53816
1730 47055
2902 53631
3201 53631
3202 53631

Proposed Rules:
272 51907
273 ..... 51274, 51907
276 51274
277 52581
319 46209
402 50929
906 49381
920 48742
923 46651
948 53842
984 50703
1150 53844

8 CFR

1 53764
100 53764
103 53764
204 53764
207 53764
208 53764
209 53764
211 53764
212 53764
213a 53764
214 53764
223 53764
235 53764
236 53764
238 53764
240 53764
241 53764
244 53764
245 53764
245a 53764
248 53764
264 53764
265 53764
270 53764
274a 53764
287 53764
292 53764
299 53764
301 53764
310 53764
312 53764
316 53764
319 53764
320 53764
322 53764
324 53764
325 53764
328 53764
329 53764
330 53764
332 53764
333 53764
334 53764
335 53764
336 53764
337 53764
338 53764

339 53764
340 53764
341 53764
342 53764
343 53764
343a 53764
343b 53764
343c 53764
392 53764
499 53764
Proposed Rules:
100 52890

9 CFR

93 52547
161 52548
201 50881
Proposed Rules:
71 50082
77 50082
78 50082
90 50082

10 CFR

429 46202
430 ....46202, 52852, 52854
433 49279
435 49279
Proposed Rules:
Ch. I 53847
26 46651
40 47085
429 ....48745, 49238
430 ....47518, 49238, 50145, 52892
431 ....47518, 48745, 50148, 51281

12 CFR

100 48950
108 48950
109 48950
112 48950
116 48950
128 48950
133 48950
136 48950
141 48950
143 48950
144 48950
145 48950
146 48950
150 48950
151 48950
152 48950
155 48950
157 48950
159 48950
160 48950
161 48950
162 48950
163 48950
164 48950
165 48950
167 48950
168 48950
169 48950
170 48950
171 48950
172 48950
174 48950
190 48950
191 48950
192 48950
193 48950
194 48950
195 48950
196 48950
197 48950
Ch. III 47652
908 53596
1204 51869
1209 53596
1780 53596
Proposed Rules:
240 46652
615 ....51289, 53344

14 CFR

33 47423
39 ....45655, 45657, 46597, 47056, 47424, 47427, 47430, 50111, 50113, 50115, 50403, 50405, 50881, 52213, 52217, 52220, 52222, 52225, 53046, 53301, 53303, 53305, 53308, 53312, 53315, 53317, 53324, 53326, 53633, 54093
61 54095
65 47058
71 ....47060, 47061, 47435, 49285, 52229, 52230, 53048, 53049, 53328, 53636
91 ....52231, 54095
95 46202
97 ....47985, 47988, 52237, 52239
119 52231
121 52241
125 52231
133 52231
137 52231
141 ....52231, 54095
142 ....52231, 54095
145 52231
147 52231
Proposed Rules:
39 ....45713, 47520, 47522, 48045, 48047, 48049, 48749, 50152, 50706, 52288, 52593, 52899, 52901, 53346, 53348, 54139, 54141, 54143, 54146
71 ....49383, 49385, 49386, 49387, 49388, 49390, 50156, 52290, 52291, 52292, 52596, 52905, 53352, 53353, 53354, 53355, 53356, 53358, 53359, 53360, 53361, 54148, 54149, 54151, 54152, 54153

15 CFR

744 50407
Proposed Rules:
Ch. VII 47527
801 50158

16 CFR

3 52249
4 52249
310 53636
Ch. II 46598, 49286
1450 47436
Proposed Rules:
239 52596
305 45715
424 51308
700 52596
701 52596
702 52596
703 52596
1130 48053

17 CFR

35 49291
40 45666
165 53172
200 46603
210 50117
229 ....46603, 50117
230 ....46603, 50117
232 ....46603, 47438
239 ....46603, 50117
240 ....46603, 46960, 50117, 52549
249 ....46603, 46960, 50117, 52549
270 50117
274 50117
Proposed Rules:
1 ....45724, 45730, 47526
23 ....45724, 45730, 47526
39 ....45730, 47526
71 46212
229 47948
230 ....47948, 49698
239 47948
240 46668
249 47948

18 CFR

35 49842
260 52253
292 50663
Proposed Rules:
357 46668

19 CFR

159 ....50883, 52862
Proposed Rules:
10 51914
101 52890
163 51914

20 CFR

655 45667

21 CFR

14 53816
520 ....48714, 49649, 53050
522 ....48714, 53050
524 48714
866 48715
870 50663
884 50663
886 51876
Proposed Rules:
73 49707
101 ....46671, 49707
573 48751
870 ....47085, 48058, 53851
882 48062

22 CFR

126 47990
Proposed Rules:
228 51916

23 CFR

Proposed Rules:
655 ....46213, 54156

24 CFR

Proposed Rules:
202 53362
203 53851

25 CFR

542 53817
543 53817
Proposed Rules:
Ch. I 54162
Ch. III 47089, 50436

26 CFR

1 ....45673, 49300, 49570, 50887, 51878, 51879, 52556, 53818, 53819
17 51879
20 49570
25 49570
51 51245
54 46621
301 ....52259, 52561
602 ....51245, 52556
Proposed Rules:
1 ....50931, 51922
31 50949
40 46677
49 46677
51 51310
54 ....46677, 52442, 52475
602 52442

27 CFR

24 52862
25 52862
26 52862
40 52862
41 52862
70 52862
Proposed Rules:
40 52913
41 52913
44 52913
45 52913
46 52913

28 CFR

55 54110
104 54112

29 CFR

9 53720
104 54006
2590 46621
4022 50413
Proposed Rules:
2590 ....52442, 52475

30 CFR

Proposed Rules:
75 54163
917 50436
943 50708
1206 52294

31 CFR

10 49650
1010 45689

32 CFR

159 49650
319 ....49658, 49659
323 49661

33 CFR

100 ....52236, 52563, 52865, 53329, 53337
117 ....45690, 47440, 48717, 49300, 49662, 49663, 49664, 50123, 50124, 51885, 52565, 52566, 52567, 53341, 53342
165 ....45693, 46626, 47441,

47993, 47996, 48718, 49301, 49664, 49666, 50124, 50667, 50669, 50680, 51255, 51887, 52266, 52268, 52269, 52569, 53051, 53054, 53337, 53820, 53822, 53824, 53827, 53829
Proposed Rules:
110 52599
117 ....50161, 50950, 52602
165 ....45738, 48070, 48751, 50710
167 47529
Subch. S 53364

34 CFR

668 52271

37 CFR

370 45695
382 45695

38 CFR

1 51890
2 51890
3 52572
17 52272
20 52572
21 ....45697, 49669
51 52274
63 52575

39 CFR

20 ....50414, 53056
111 ....48722, 51257
775 53037
912 52580
Proposed Rules:
111 50438
3001 54179
3020 51311
3025 54179
3050 52915

40 CFR

1 49669
2 49669
9 47996
21 49669
35 49669
49 49669
50 54294
51 48208
52 ....45705, 47062, 47068, 47074, 47076, 47443, 48002, 48006, 48208, 49303, 49313, 49669, 50128, 50891, 51264, 51901, 51903, 52275, 52278, 52283, 52388, 52867, 53638, 53640
53 54294
58 54294
59 49669
60 49669
61 49669
62 49669
63 49669
65 49669
72 ....48208, 50129
75 50129
78 48208
82 ....47451, 49669
97 48208
98 53037
147 49669
180 ....49318, 50893, 50898, 50904, 52871, 52875, 53641, 54127
282 49669
300 ....49324, 50133, 50414, 51266
374 49669
704 50816
707 49669
710 50816
711 50816
721 47996
745 47918
763 49669
Proposed Rules:
50 ....46084, 48073
52 ....45741, 47090, 47092, 47094, 48754, 49391, 49708, 49711, 51314, 51922, 51925, 51927, 52604, 52623, 52917, 53369, 53853
60 ....52738, 53371
63 ....52738, 53371
72 50164
75 50164
81 53853
85 48758
86 48758
98 47392
174 49396
180 ....49396, 53372, 54185
260 ....48073, 53376
261 ....48073, 53376
270 53376
300 ....49397, 50164, 50441, 51316
370 48093
600 48758
721 46678

41 CFR

Proposed Rules:
60 49398
Ch. 301 46216

42 CFR

50 53256
412 ....47836, 51476
413 ....48486, 51476
418 47302
476 51476
Proposed Rules:
5 ....50442, 53377
430 46684
431 51148
433 ....46684, 51148
435 51148
447 46684
457 ....46684, 51148

43 CFR

Proposed Rules:
2 52295

44 CFR

64 49329
65 ....49674, 50420, 50423, 50913, 50915, 52879
67 ....49676, 50918, 50920, 54134
Proposed Rules:
67 ....46701, 46705, 46715, 46716, 50443, 50446, 50952, 50960, 53082

45 CFR

94 53256
147 46621
Proposed Rules:
147 ....52442, 52475
155 51202
157 51202
170 48769

46 CFR

Proposed Rules:
1 ....45908, 46217, 48101
2 ....47531, 49976
10 ....45908, 46217, 48101
11 ....45908, 46217, 48101
12 ....45908, 46217, 48101
13 ....45908, 46217, 48101
14 ....45908, 46217, 48101
15 ....45908, 46217, 49976
28 51317
136 49976
137 49976
138 49976
139 49976
140 49976
141 49976
142 49976
143 49976
144 49976
401 ....47095, 50713

47 CFR

1 ....49333, 49364
2 49364
25 ....49364, 50425
64 ....47469, 47476
73 ....49364, 49697
90 51271
Proposed Rules:
9 47114
36 49401
54 ....49401, 50969
61 49401
64 ....49401, 52625
69 49401
73 ....52632, 54188, 54189

48 CFR

201 52139
209 52138
216 52133
225 ....52132, 52133
245 52139
252 ....52133, 52138, 52139
1401 50141
1402 50141
1415 50141
1417 50141
1419 50141
1436 50141
1452 50141
1816 46206
6101 50926
6103 50926
6104 50926
6105 50926
9903 49365
Proposed Rules:
42 ....48776, 50714
204 52297
252 52297
9904 ....53377, 53378

49 CFR

228 50360
383 50433
390 50433
563 47478
567 53072
571 ....48009, 52880, 53648
591 53072
592 53072
593 53072
595 47078
1002 46628
1515 ....51848, 53080
1520 ....51848, 53080
1522 ....51848, 53080
1540 ....51848, 53080
1544 ....51848, 53080
1546 ....51848, 53080
1548 ....51848, 53080
1549 ....51848, 53080
Proposed Rules:
171 ....50332, 51324
172 ....50332, 51324
173 ....50332, 51324
174 ....50332, 51324
175 50332
176 50332
177 50332
178 50332
179 51272
180 51272
192 53086
236 52918
531 48758
533 48758
571 ....53102, 53660
580 48101

50 CFR

17 ....46632, 47490, 48722, 49542, 50052, 50680, 53224, 54346
18 47010
20 54052
80 46150
622 ....50143, 51905
635 ....49368, 52886, 53343, 53652
648 ....47491, 47492, 51272, 52286, 53831, 53832
660 53833
665 52888
679 ....45709, 46207, 46208, 47083, 47493, 53658, 53840, 54137
Proposed Rules:
17 ....46218, 46234, 46238, 46251, 46362, 47123, 47133, 48777, 49202, 49408, 49412, 50542, 50971, 51929, 52297, 53379, 53381
20 ....48694, 53536
223 ....50447, 50448
224 ....49412, 50447, 50448
622 ....46718, 50979Q
648 ....45742, 47533, 53872
660 50449
665 46719
679 ....49417, 52148, 52301
680 49423

LIST OF PUBLIC LAWS

This is a continuing list of public bills from the current session of Congress which have become Federal laws. It may be used in conjunction with "P L U S" (Public Laws Update Service) on 202–741–6043. This list is also available online at *http://www.archives.gov/federal-register/laws*.

The text of laws is not published in the **Federal Register** but may be ordered in "slip law" (individual pamphlet) form from the Superintendent of Documents, U.S. Government Printing Office, Washington, DC 20402 (phone, 202–512–1808). The text will also be made available on the Internet from GPO's Federal Digital System (FDsys) at *http://www.gpo.gov/fdsys*. Some laws may not yet be available.

H.R. 2553/P.L. 112–27
Airport and Airway Extension Act of 2011, Part IV (Aug. 5, 2011; 125 Stat. 270)

H.R. 2715/P.L. 112–28
To provide the Consumer Product Safety Commission with greater authority and discretion in enforcing the consumer product safety laws, and for other purposes. (Aug. 12, 2011; 125 Stat. 273)

Last List August 5, 2011

Public Laws Electronic Notification Service (PENS)

PENS is a free electronic mail notification service of newly enacted public laws. To subscribe, go to *http://listserv.gsa.gov/archives/publaws-l.html*

Note: This service is strictly for E-mail notification of new laws. The text of laws is not available through this service. **PENS** cannot respond to specific inquiries sent to this address.