AUTHENTICATED
U.S. GOVERNMENT
INFORMATION
GPO

FEDERAL REGISTER

Vol. 76 Thursday,
No. 208 October 27, 2011

Pages 66601–66848

OFFICE OF THE FEDERAL REGISTER

The **FEDERAL REGISTER** (ISSN 0097–6326) is published daily, Monday through Friday, except official holidays, by the Office of the Federal Register, National Archives and Records Administration, Washington, DC 20408, under the Federal Register Act (44 U.S.C. Ch. 15) and the regulations of the Administrative Committee of the Federal Register (1 CFR Ch. I). The Superintendent of Documents, U.S. Government Printing Office, Washington, DC 20402 is the exclusive distributor of the official edition. Periodicals postage is paid at Washington, DC.

The **FEDERAL REGISTER** provides a uniform system for making available to the public regulations and legal notices issued by Federal agencies. These include Presidential proclamations and Executive Orders, Federal agency documents having general applicability and legal effect, documents required to be published by act of Congress, and other Federal agency documents of public interest.

Documents are on file for public inspection in the Office of the Federal Register the day before they are published, unless the issuing agency requests earlier filing. For a list of documents currently on file for public inspection, see *www.ofr.gov.*

The seal of the National Archives and Records Administration authenticates the Federal Register as the official serial publication established under the Federal Register Act. Under 44 U.S.C. 1507, the contents of the **Federal Register** shall be judicially noticed.

The **Federal Register** is published in paper and on 24x microfiche. It is also available online at no charge at *www.fdsys.gov*, a service of the U.S. Government Printing Office.

The online edition of the **Federal Register** is issued under the authority of the Administrative Committee of the Federal Register as the official legal equivalent of the paper and microfiche editions (44 U.S.C. 4101 and 1 CFR 5.10). It is updated by 6:00 a.m. each day the **Federal Register** is published and includes both text and graphics from Volume 59, 1 (January 2, 1994) forward. For more information, contact the GPO Customer Contact Center, U.S. Government Printing Office. Phone 202-512-1800 or 866-512-1800 (toll free). E-mail, *gpo@custhelp.com.*

The annual subscription price for the **Federal Register** paper edition is $749 plus postage, or $808, plus postage, for a combined **Federal Register, Federal Register** Index and List of CFR Sections Affected (LSA) subscription; the microfiche edition of the **Federal Register** including the **Federal Register** Index and LSA is $165, plus postage. Six month subscriptions are available for one-half the annual rate. The prevailing postal rates will be applied to orders according to the delivery method requested. The price of a single copy of the daily **Federal Register,** including postage, is based on the number of pages: $11 for an issue containing less than 200 pages; $22 for an issue containing 200 to 400 pages; and $33 for an issue containing more than 400 pages. Single issues of the microfiche edition may be purchased for $3 per copy, including postage. Remit check or money order, made payable to the Superintendent of Documents, or charge to your GPO Deposit Account, VISA, MasterCard, American Express, or Discover. Mail to: U.S. Government Printing Office—New Orders, P.O. Box 979050, St. Louis, MO 63197-9000; or call toll free 1-866-512-1800, DC area 202-512-1800; or go to the U.S. Government Online Bookstore site, see *bookstore.gpo.gov.*

There are no restrictions on the republication of material appearing in the **Federal Register.**

How To Cite This Publication: Use the volume number and the page number. Example: 76 FR 12345.

Postmaster: Send address changes to the Superintendent of Documents, Federal Register, U.S. Government Printing Office, Washington, DC 20402, along with the entire mailing label from the last issue received.

SUBSCRIPTIONS AND COPIES

PUBLIC

Subscriptions:

Paper or fiche	**202–512–1800**
Assistance with public subscriptions	**202–512–1806**

General online information **202–512–1530; 1–888–293–6498**

Single copies/back copies:

Paper or fiche	**202–512–1800**
Assistance with public single copies	**1–866–512–1800 (Toll-Free)**

FEDERAL AGENCIES

Subscriptions:

Paper or fiche	**202–741–6005**
Assistance with Federal agency subscriptions	**202–741–6005**

Printed on recycled paper.

Contents

Federal Register

Vol. 76, No. 208

Thursday, October 27, 2011

Agricultural Marketing Service
RULES
Termination of Marketing Orders:
Nectarines and Fresh Peaches Grown in California, 66602–66606
NOTICES
Agency Information Collection Activities; Proposals, Submissions, and Approvals:
Regulations Governing the Inspection and Grading of Manufactured or Processed Dairy Products – Recordkeeping (Subpart B), 66682–66683

Agriculture Department
See Agricultural Marketing Service
See Office of Advocacy and Outreach
RULES
Revision of Delegations of Authority, 66601–66602
NOTICES
Agency Information Collection Activities; Proposals, Submissions, and Approvals, 66682

Alcohol and Tobacco Tax and Trade Bureau
RULES
Approval of Grape Variety Names for American Wines, 66625–66629
Establishment of the Pine Mountain–Cloverdale Peak Viticultural Area, 66629–66637

Centers for Disease Control and Prevention
NOTICES
Meetings:
CDC/HRSA Advisory Committee on HIV and STD Prevention and Treatment, 66721

Children and Families Administration
NOTICES
Requirements for Electronic Submission of Discretionary Grant Applications, 66721–66723

Coast Guard
NOTICES
Agency Information Collection Activities; Proposals, Submissions, and Approvals, 66737–66740

Commerce Department
See Foreign-Trade Zones Board
See Industry and Security Bureau
See International Trade Administration
See National Institute of Standards and Technology
See National Oceanic and Atmospheric Administration
NOTICES
Agency Information Collection Activities; Proposals, Submissions, and Approvals, 66683–66684

Copyright Office, Library of Congress
NOTICES
Remedies for Small Copyright Claims, 66758–66761

Defense Department
NOTICES
Privacy Act; Systems of Records, 66695–66698

Department of Transportation
See Pipeline and Hazardous Materials Safety Administration

Education Department
NOTICES
Federal Student Financial Assistance Programs:
Invitation to Postsecondary Educational Institutions to Participate in Experiments, 66698–66707

Employee Benefits Security Administration
RULES
Employee Benefit Plans:
Prohibited Transaction Exemption Procedures, 66637–66654

Employment and Training Administration
NOTICES
Determinations Regarding Eligibility to Apply for Worker and Alternative Trade Adjustment Assistance, 66756–66758
Investigations Regarding Certifications of Eligibility to Apply for Worker and Alternative Trade Adjustment Assistance, 66758

Energy Department
See Federal Energy Regulatory Commission

Environmental Protection Agency
PROPOSED RULES
Approvals and Promulgations of Implementation Plans:
Illinois; Consumer Products and AIM Rules, 66663–66666
NOTICES
Agency Information Collection Activities; Proposals, Submissions, and Approvals:
Submission of Invoices, and Related Information, 66715–66717
Meetings:
Clean Air Act Advisory Committee, 66718
Clean Air Scientific Advisory Committee Air Monitoring and Methods Subcommittee, 66717–66718

Executive Office of the President
See Presidential Documents

Federal Aviation Administration
RULES
Airworthiness Directives:
Agusta S.p.A. Model AB139 and AW139 Helicopters, 66623–66625
Bell Helicopter Textron Canada (Bell) Model 407 and 427 Helicopters, 66609–66613
Bombardier, Inc. Model CL 215 1A10, CL 215 6B11 (CL 215T Variant), and CL 215 6B11 (CL 415 Variant) Airplanes, 66620–66622
Erickson Air-Crane Inc. Model S–64F Helicopters, 66617–66618
Eurocopter France (Eurocopter) Model AS332C, AS332L, AS332L1, and AS332L2 Helicopters, 66606–66609
Eurocopter France (Eurocopter) Model EC225LP Helicopters, 66613–66615, 66618–66620
Sikorsky Aircraft Corporation (Sikorsky) Model S–92A Helicopters, 66615–66617

PROPOSED RULES
Amendment of Class D Airspace:
Santa Monica, CA, 66662–66663
Special Conditions:
Gulfstream Aerospace LP (GALP) Model G280 airplane, Operation Without Normal Electrical Power, 66660–66662

Federal Communications Commission
PROPOSED RULES
Basic Service Tier Encryption Compatibility Between Cable Systems and Consumer Electronics Equipment, 66666–66672

Federal Election Commission
NOTICES
Meetings; Sunshine Act, 66718

Federal Energy Regulatory Commission
NOTICES
Agency Information Collection Activities; Proposals, Submissions, and Approvals, 66707–66708
Applications:
El Paso Natural Gas Co., 66708–66709, 66711
Erie Boulevard Hydropower, LP, 66710–66711
Trunkline Gas Co., LLC and Sea Robin Pipeline Co., LLC, 66709–66710
Combined Filings, 66712–66713
Compliance Filings:
Atlanta Gas Light Co., 66713
License Applications:
Hydro Green Energy, LLC, 66713–66714
Raymond F. Ward, 66714
Preliminary Permit Applications:
City and Borough of Sitka, AK, 66714–66715
Public Utility District No. 1 of Snohomish County, 66715

Federal Highway Administration
NOTICES
Emergency Temporary Closures:
I–64 Sherman–Minton Bridge over the Ohio River between Indiana and Kentucky, 66775–66777

Federal Reserve System
NOTICES
Changes in Bank Control:
Acquisitions of Shares of a Bank or Bank Holding Company, 66719
Formations of, Acquisitions by, and Mergers of Bank Holding Companies, 66719

Fish and Wildlife Service
RULES
Endangered and Threatened Wildlife and Plants:
Removal of the Concho Water Snake From the Federal List and Removal of Designated Critical Habitat, 66780–66804

Food and Drug Administration
NOTICES
Food Safety Modernization Act:
Domestic and Foreign Facility Reinspections, Recall, and Importer Reinspection User Fee Rates for Fiscal Year 2012, 66723

Foreign-Trade Zones Board
NOTICES
Applications for Subzones:
Foreign-Trade Zone 29, Louisville, KY, North American Stainless, 66684–66685
Foreign-Trade Zone 37, Orange County, NY, ITT Water Technology, Inc., 66685

Health and Human Services Department
See Centers for Disease Control and Prevention
See Children and Families Administration
See Food and Drug Administration
See National Institutes of Health
NOTICES
Meetings:
National Committee on Vital and Health Statistics, 66720–66721
National Committee on Vital and Health Statistics, Standards Subcommittee, 66719–66720
Presidential Commission for the Study of Bioethical Issues, 66720

Homeland Security Department
See Coast Guard
See U.S. Customs and Border Protection

Housing and Urban Development Department
NOTICES
Statutorily Mandated Designation of Difficult Development Areas and Qualified Census Tracts for 2012, 66741–66747

Industry and Security Bureau
NOTICES
Meetings:
President's Export Council Subcommittee on Export Administration, 66685

Interior Department
See Fish and Wildlife Service
See Land Management Bureau

International Trade Administration
NOTICES
Administrative Reviews; Extension of Time Limit for Preliminary Results:
Uncovered Innerspring Units from the People's Republic of China, 66686
Antidumping Duty Administrative Reviews; Results, Amendments, Extensions, etc.:
Certain Large Diameter Carbon and Alloy Seamless Standard, Line, and Pressure Pipe (Over 4 1/2 Inches) from Japan, 66688–66690
Certain Preserved Mushrooms from the People's Republic of China, 66686
Purified Carboxymethylcellulose from the Netherlands, 66687–66688
Solid Urea from the Russian Federation, 66690–66692
Executive-led Trade Mission to Afghanistan, 66692–66693
Meetings:
President's Export Council, 66693–66694

International Trade Commission
NOTICES
Antidumping Duty Administrative Reviews; Results, Amendments, Extensions, etc.
Crystalline Silicon Photovoltaic Cells and Modules from China, 66748–66749

Complaints:
Certain Automotive GPS Navigation Systems, Components Thereof, and Products Containing Same, 66750–66751
Certain Projectors with Controlled-Angle Optical Retarders, Components Thereof, and Products Containing Same, 66750
Meetings; Sunshine Act, 66751–66752

Justice Department
See Prisons Bureau
NOTICES
Privacy Act; Systems of Records, 66752–66754

Labor Department
See Employee Benefits Security Administration
See Employment and Training Administration
NOTICES
Agency Information Collection Activities; Proposals, Submissions, and Approvals:
Construction Recordkeeping and Reporting, 66756
Payment of Compensation Without Award, 66755–66756

Land Management Bureau
NOTICES
Environmental Impact Statements; Availability, etc.:
Northern Arizona; Proposed Withdrawal, 66747–66748

Library of Congress
See Copyright Office, Library of Congress

National Archives and Records Administration
NOTICES
Records Schedules; Availability and Request for Comments, 66761–66763

National Institute of Standards and Technology
NOTICES
Research and Development Priorities for Desirable Features of a Nationwide Public Safety Broadband Network, 66694

National Institutes of Health
NOTICES
Agency Information Collection Activities; Proposals, Submissions, and Approvals:
Construction Grants, 66723–66724
Neuropsychosocial Measures Formative Research Methodology Studies for the National Children's Study, 66724–66726
Government-Owned Inventions; Availability for Licensing, 66726–66728
Government-Owned Inventions; Licensing and Collaborative Research Opportunities:
PANVAC – Cancer Vaccine for the Prevention and Treatment of Colorectal Cancer, 66728–66730
Meetings:
Center for Scientific Review, 66734
National Cancer Institute, 66732–66734
National Eye Institute, 66732
National Human Genome Research Institute, 66731
National Institute of Allergy and Infectious Diseases, 66731
National Institute of Neurological Disorders and Stroke, 66730, 66732
Office of the Director, 66731–66732
National Institute on Deafness and Other Communication Disorders Draft 2012–2016 Strategic Plan; Availability, 66734–66735
Requirements and Registration for the NIBIB DEsign by Biomedical Undergraduate Teams Challenge, 66735–66737

National Oceanic and Atmospheric Administration
RULES
Endangered and Threatened Wildlife and Plants:
Designation of Critical Habitat for Black Abalone, 66806–66844
Fisheries of the Exclusive Economic Zone Off Alaska:
Pacific Cod and Octopus in the Bering Sea and Aleutian Islands Management Area, 66655
Fisheries of the Northeastern United States:
Atlantic Herring Fishery; Sub-ACL (Annual Catch Limit) Harvested for Management Area 1A, 66654–66655
PROPOSED RULES
Fisheries of the Caribbean, Gulf of Mexico, and South Atlantic:
Queen Conch and Reef Fish Fishery Management Plans of Puerto Rico and the U.S. Virgin Islands, 66675–66681
Reef Fish Fishery of the Gulf of Mexico; Amendment 32, 66672–66675
NOTICES
Meetings:
New England Fishery Management Council, 66694–66695

Nuclear Regulatory Commission
NOTICES
Models for Plant-Specific Adoption of Technical Specifications Task Force Traveler TSTF–510:
Revision to Steam Generator Program Inspection Frequencies and Tube Sample Selection, 66763–66764

Office of Advocacy and Outreach
PROPOSED RULES
Agricultural Career and Employment Grants Program, 66656–66660

Personnel Management Office
NOTICES
Excepted Service, 66764–66766

Pipeline and Hazardous Materials Safety Administration
NOTICES
Special Permit Applications, 66777–66778

Postal Regulatory Commission
NOTICES
New Postal Products, 66766–66767

Presidential Documents
PROCLAMATIONS
Special Observances:
United Nations Day (Proc. 8740), 66845–66848

Prisons Bureau
NOTICES
Availability of Records of Decision:
Contract Award to House Federal, Low-Security Criminal Aliens within a Contractor-Owned and Operated Correctional Facility, 66754–66755

Small Business Administration
NOTICES
Disaster Declarations:
Delaware, 66768

Iowa, 66768
Puerto Rico, 66768–66769
Vermont; Amendment 6, 66767
Military Reservist Economic Injury Disaster Loans Interest Rate for First Quarter FY 2012, 66769

State Department
NOTICES
Bureau of Educational and Cultural Affairs Request for Grant Proposals:
The Future Leaders Exchange Program; Host Family and School Placement and Monitoring, 66769–66775
Meetings:
Defense Trade Advisory Group, 66775

Transportation Department
See Federal Aviation Administration
See Federal Highway Administration
See Pipeline and Hazardous Materials Safety Administration

Treasury Department
See Alcohol and Tobacco Tax and Trade Bureau

U.S. Customs and Border Protection
NOTICES
Agency Information Collection Activities; Proposals, Submissions, and Approvals:
Entry and Immediate Delivery Application, 66740–66741
Prior Disclosure, 66741

Separate Parts In This Issue

Part II
Interior Department, Fish and Wildlife Service, 66780–66804

Part III
Commerce Department, National Oceanic and Atmospheric Administration, 66806–66844

Part IV
Presidential Documents, 66845–66848

Reader Aids

Consult the Reader Aids section at the end of this page for phone numbers, online resources, finding aids, reminders, and notice of recently enacted public laws.

To subscribe to the Federal Register Table of Contents LISTSERV electronic mailing list, go to http://listserv.access.gpo.gov and select Online mailing list archives, FEDREGTOC-L, Join or leave the list (or change settings); then follow the instructions.

CFR PARTS AFFECTED IN THIS ISSUE

A cumulative list of the parts affected this month can be found in the Reader Aids section at the end of this issue.

3 CFR

Proclamations:

8740 66847

7 CFR

2 (2 documents) 66601
916 66602
917 66602

Proposed Rules:

2502 66656

14 CFR

39 (8 documents) 66606, 66609, 66613, 66615, 66617, 66618, 66620, 66623

Proposed Rules:

25 66660
71 66662

27 CFR

4 66625
9 66629

29 CFR

2570 66637

40 CFR

Proposed Rules:

52 66663

47 CFR

Proposed Rules:

76 66666

50 CFR

17 66780
226 66806
648 66654
679 66655

Proposed Rules:

622 (2 documents) 66672, 66675

Rules and Regulations

Federal Register
Vol. 76, No. 208
Thursday, October 27, 2011

This section of the FEDERAL REGISTER contains regulatory documents having general applicability and legal effect, most of which are keyed to and codified in the Code of Federal Regulations, which is published under 50 titles pursuant to 44 U.S.C. 1510.

The Code of Federal Regulations is sold by the Superintendent of Documents. Prices of new books are listed in the first FEDERAL REGISTER issue of each week.

DEPARTMENT OF AGRICULTURE

Office of the Secretary

7 CFR Part 2

Revision of Delegations of Authority

AGENCY: Office of the Secretary, USDA.

ACTION: Final rule.

SUMMARY: This document amends the delegation of authority from the Secretary of Agriculture to the Director of the Office of Communications to serve as the central information authority for emergency public information activities. The Secretary further delegates to the Director of the Office of Communications the authority to serve as the central authority for the Department and agency strategic communications plans.

DATES: This rule is effective October 27, 2011.

FOR FURTHER INFORMATION CONTACT: Ronald N. DeMunbrun, Office of Communications Budget Officer, (202) 400–0827, *ron.demunbrun@oc.usda.gov.*

SUPPLEMENTARY INFORMATION: Effective June 6, 2010, the Secretary of Agriculture (Secretary) implemented within USDA a reorganization of the Office of Communications (OC), led by the Director of OC. This rulemaking amends USDA's delegations of authority at 7 CFR 2.36 principally to reflect this reorganization. Under the reorganized structure, the Director of OC assumes responsibility for USDA's strategic communications planning process. The Director of OC provides Departmental executive leadership in developing and implementing USDA's communications strategies for the Secretary and the agencies, including oversight of creative elements, production, and communications products.

This rule also amends the delegations of authority at 7 CFR 2.36 to reflect that the Director of OC is delegated authority, when required under the National Incident Management System (NIMS), to establish and administer a Joint Information Center (JIC) to provide a structure for developing and delivering incident-related coordinated messages.

This rule relates to internal agency management. Therefore, pursuant to 5 U.S.C. 553(a)(2), notice of proposed rulemaking and opportunity for comment are not required, and this rule may be made effective less than 30 days after publication in the **Federal Register**. Further, because this rule relates to internal agency management, it is exempt from the provisions of Executive Order 12866. Finally, this action is not a rule as defined by the Regulatory Flexibility Act, 5 U.S.C. 601 *et seq,* and is, therefore, exempt from the provisions of the Act. Accordingly, as authorized by 5 U.S.C. 808, this rule may be made effective upon publication. This rule contains no information collection or recordkeeping requirements under the Paperwork Reduction Act of 1995 (44 U.S.C. 3501 *et seq*).

List of Subjects in 7 CFR Part 2

Authority Delegations (Government agencies).

Accordingly, Subtitle A of Title 7 of the Code of Federal Regulations is amended as set forth below:

PART 2—DELEGATIONS OF AUTHORITY BY THE SECRETARY OF AGRICULTURE AND GENERAL OFFICERS OF THE DEPARTMENT

■ 1. The authority citation for part 2 continues to read as follows:

Authority: 7 U.S.C. 6912(a): 5 U.S.C. 301; Reorganization Plan No. 2 of 1953, 3 CFR 1949–1953 Comp., p. 1024.

Subpart D—Delegations of Authority to Other General Officers and Agency Heads

■ 2. Amend § 2.36 as follows:
■ a. Revise paragraph (a)(2)(iv); and
■ b. Add new paragraphs (a)(2)(xii) and (a)(2)(xiii), to read as follows:

§ 2.36 Director, Office of Communications.

(a) * * *

(2) * * *

(iv) Serve as the central public information authority in the USDA, with authority to determine policy for all USDA and Agency communication activities, as well as emergency public information and messaging communication activities, in order to provide leadership and centralized operational direction for all USDA public information activities and ensure all materials shall effectively support USDA policies and programs, including the defense program.

* * * * *

(xii) Serve as the central authority to determine policy, plans, procedures, and standards for the Department and agency strategic communications plans; request, receive, review, and approve agency communications plans; and provide centralized communication strategies for the Secretary and agencies, including the creativity, production, and oversight of communication products.

(xiii) When required, support and coordinate staffing of a JIC as identified in the NIMS, and if required, establish and administer a JIC to provide a structure for developing and delivering incident-related coordinated messages.

* * * * *

Signed in Washington, DC, this day: October 21, 2011.

Thomas J. Vilsack,

Secretary of Agriculture.

[FR Doc. 2011–27760 Filed 10–26–11; 8:45 am]

BILLING CODE 3411–N8–P

DEPARTMENT OF AGRICULTURE

Office of the Secretary

7 CFR Part 2

Revision of Delegations of Authority

AGENCY: Office of the Secretary, USDA.

ACTION: Final rule.

SUMMARY: This document amends the delegation of authority from the Secretary of Agriculture to the Director of the Office of Communications to serve as the central authority for the creation and use of logos/marks not otherwise provided for by specific laws and regulations, and excluding the Official USDA Seal and Official USDA Symbol.

DATES: This rule is effective October 27, 2011.

FOR FURTHER INFORMATION CONTACT: Ronald N. DeMunbrun, Office of

Communications Budget Officer, (202) 360–3962.

SUPPLEMENTARY INFORMATION: This rule relates to internal agency management. Therefore, pursuant to 5 U.S.C. 553(a)(2), notice of proposed rulemaking and opportunity for comment are not required, and this rule may be made effective less than 30 days after publication in the **Federal Register**. Further, because this rule relates to internal agency management, it is exempt from the provisions of Executive Order No. 12866. Finally, this action is not a rule as defined by the Regulatory Flexibility Act, 5 U.S.C. 601 *et seq.,* and is, therefore, exempt from the provisions of the Act. Accordingly, as authorized by 5 U.S.C. 808, this rule may be made effective upon publication.

This rule contains no information collection or recordkeeping requirements under the Paper Reduction Act of 1995 (44 U.S.C. 3501 *et. seq*).

List of Subjects in 7 CFR Part 2

Authority Delegations (Government agencies).

Accordingly, Subtitle A of Title 7 of the Code of Federal Regulations is amended as set forth below:

PART 2—DELEGATIONS OF AUTHORITY BY THE SECRETARY OF AGRICULTURE AND GENERAL OFFICERS OF THE DEPARTMENT

■ 1. The authority citation for part 2 continues to read as follows:

Authority: 7 U.S.C. 6912(a): 5 U.S.C. 301; Reorganization Plan No. 2 of 1953, 3 CFR 1949–1953 Comp. p. 1024.

Subpart D—Delegation of Authority to Other General Officers and Agency Heads

■ 2. Amend § 2.36 by adding a new paragraph (a)(2)(xiv), to read as follows:

§ 2.36 Director, Office of Communications.

(a) * * *

(2) * * *

(xiv) Serve as the central authority to determine policy, plans, procedures, guidelines, and standards for the creation and use of logos/marks by the Department's mission areas, staff offices or agencies, not otherwise provided for by specific laws and regulations, and excluding the Official USDA Seal and Official USDA Symbol.

* * * * *

Signed in Washington, DC, on October 21, 2011.

Thomas J. Vilsack,

Secretary of Agriculture.

[FR Doc. 2011–27759 Filed 10–26–11; 8:45 am]

BILLING CODE 3411–N8–P

DEPARTMENT OF AGRICULTURE

Agricultural Marketing Service

7 CFR Parts 916 and 917

[Doc. No. AMS–FV–11–0018; FV11–916/917–4 FR]

Nectarines and Fresh Peaches Grown in California; Termination of Marketing Order 916 and the Peach Provisions of Marketing Order 917

AGENCY: Agricultural Marketing Service, USDA.

ACTION: Final rule, termination of order.

SUMMARY: This final rule terminates the Federal marketing orders regulating the handling of nectarines and fresh peaches grown in California (orders) and the rules and regulations issued thereunder. The Department of Agriculture (USDA) has determined that these marketing orders are no longer an effective marketing tool for the handling of nectarines and fresh peaches grown in California and that termination best serves the current needs of the industry while also eliminating the costs associated with the operation of the marketing orders.

DATES: *Effective Date:* October 28, 2011.

FOR FURTHER INFORMATION CONTACT: Jerry L. Simmons, Marketing Specialist, or Kurt J. Kimmel, Regional Manager, California Marketing Field Office, Marketing Order and Agreements Division, Fruit and Vegetable Programs, AMS, USDA; Telephone: (559) 487–5901; Fax: (559) 487–5906; or Email: *Jerry.Simmons@ams.usda.gov* or *Kurt.Kimmel@ams.usda.gov.*

Small businesses may request information on complying with this regulation by contacting Laurel May, Marketing Order and Agreements Division, Fruit and Vegetable Programs, AMS, USDA, 1400 Independence Avenue SW., STOP 0237, Washington, DC 20250–0237; Telephone: (202) 720–2491, Fax: (202) 720–8938, or Email: *Laurel.May@ams.usda.gov.*

SUPPLEMENTARY INFORMATION: This action is governed by Section 608c(16)(A) of the Agricultural Marketing Agreement Act of 1937, as amended (7 U.S.C. 601–674), hereinafter referred to as the ''Act'' and issued under Marketing Order Nos. 916 and 917, both as amended (7 CFR parts 916 and 917), regulating the handling of nectarines and peaches grown in California, respectively, hereinafter referred to as the ''orders.''

USDA is issuing this rule in conformance with Executive Order 12866.

This final rule to terminate the orders has been reviewed under Executive Order 12988, Civil Justice Reform. This rule is not intended to have retroactive effect.

The Act provides that administrative proceedings must be exhausted before parties may file suit in court. Under section 608c(15)(A) of the Act, any handler subject to an order may file with USDA a petition stating that the order, any provision of the order, or any obligation imposed in connection with the order is not in accordance with law and request a modification of the order or to be exempted therefrom. A handler is afforded the opportunity for a hearing on the petition. After the hearing USDA would rule on the petition. The Act provides that the district court of the United States in any district in which the handler is an inhabitant, or has his or her principal place of business, has jurisdiction to review USDA's ruling on the petition, provided an action is filed not later than 20 days after the date of the entry of the ruling.

This rule terminates Marketing Order 916—the nectarine order—and the peach provisions of Marketing Order 917—the fresh pear and peach order—as well as the pertinent rules and regulations issued thereunder. USDA believes that termination of these programs is appropriate because the programs are no longer favored by industry growers.

The orders authorize regulation of the handling of nectarines and fresh pears and peaches grown in California. Sections 916.64 and 917.61 of the orders require USDA to conduct continuance referenda among growers of these fruits every four years to ascertain continuing support for the orders and their programs. These sections further require USDA to terminate the orders if it finds that the provisions of the orders no longer tend to effectuate the declared policy of the Act. Section 608c(16)(A) of the Act requires USDA to terminate or suspend the operation of any order whenever the order or any provision thereof obstructs or does not tend to effectuate the declared policy of the Act. Finally, USDA is required to notify Congress of the intended terminations not later than 60 days before the date the orders would be terminated.

Continuance referenda were conducted among growers of California nectarines and fresh pears and peaches in January and February 2011. Less than two-thirds of participating growers, by number and production volume, voted in favor of continuing the nectarine and peach orders. By contrast, more than 94 percent of pear growers voted to continue the pear order provisions.

Grower support for the programs was similar in the last referenda, which were conducted in 2003. USDA conducted public listening sessions following the referenda and found that the nectarine and peach orders might continue to benefit the industries if modifications were made to the programs. Subsequently, several revisions were made to the orders and the handling regulations over the last several years. Continuance referendum requirements were suspended for 2007 because the orders had just been amended, and the industries wanted to operate the amended orders for a period of time before voting again on continuance.

Nevertheless, the results of the most recent referenda, as well as feedback from the industries over the last few years, suggest that the nectarine and peach programs no longer meet industry needs and that the benefits of such programs no longer outweigh costs to handlers and growers. USDA believes that the referendum results and industry feedback support termination of the programs.

As stated earlier, pear growers in the most recent referendum, as well as in previous referenda, supported continuance of the pear order provisions, which have been suspended since 1994 (59 FR 10055; March 3, 1994). USDA does not intend to terminate the pear order provisions at this time. The remainder of this document pertains to the termination of the nectarine and peach order provisions only.

The nectarine order has been in effect since 1958, and the peach order since 1939. Operating under the management umbrella of the California Tree Fruit Agreement (CTFA), the orders have provided the California fresh tree fruit industries with authority for grade, size, quality, maturity, pack, and container regulations, as well as the authority for mandatory inspection. The orders also authorize production research and marketing research and development projects, as well as the necessary reporting, recordkeeping, and assessment functions required for operation.

Based on the referendum results and other pertinent factors, USDA suspended the orders' handling regulations on April 19, 2011 (76 FR 21615). The suspended handling regulations consist of minimum quality and inspection requirements for nectarines and peaches marked with the ''California Well Matured'' label, which is available for use only by handlers complying with prescribed quality and maturity requirements under the orders. As well, all reporting and assessment requirements were suspended.

Originally established to maintain the orderly marketing of California tree fruit, the quality regulations under the order evolved over the years to reflect industry trends. The ''California Well Matured'' label was developed to define standards for premium quality fruit harvested and packed at its peak to satisfy customer demands. Working with the Federal and Federal-State Inspection Programs, the Nectarine Administrative Committee and Peach Commodity Committee (committees), which administer the day-to-day operations of the programs, recommended variety-specific size and maturity standards that were incorporated into the regulations. These standards helped ensure that the industry marketed and shipped the highest quality fruit, which in turn supported increased returns to growers and handlers. A ''utility grade'' was defined to allow for the movement of a certain percentage of lesser quality fruit to markets where it could be sold without undermining the industry's overall marketing goals.

Funded through assessments paid by handlers, the committees sponsored production research programs to address grower needs such as pesticide use and development of new fruit varieties. As well, post-harvest handling concerns, such as container and pack configuration, were addressed through committee-funded research. Assessment funds were also used to fund market research and development projects, promoting California tree fruit in both domestic and international markets.

In recent years, changes in the industry led the committees to reduce the number of programs they supported through the orders. Because many customers now establish their own quality standards, the committees felt it was no longer essential to mandate inspection and certification of packed fruit to marketing order standards. During the last few years, only those handlers wishing to use the ''California Well Matured'' label were required to obtain inspection and certification. With the consolidation of many smaller farms, larger companies have undertaken their own research and promotion programs, thus minimizing the desirability of committee-funded generic programs.

The industries proposed several amendments to the orders, which were effectuated in 2006 and 2007 (71 FR 41345; July 21, 2006). The amendments modernized the orders to streamline administration of the programs. The district boundaries within the regulated production areas were redefined, and the committee structures and nomination procedures were modified to provide greater opportunities for participation in committee activities by industry members.

Despite USDA efforts to help refine the programs over the past several years, growers have continued to express their belief that the programs no longer meet their needs. These referendum results demonstrate a lack of grower support needed to carry out the objectives of the Act. Thus, it has been determined that the provisions of the orders no longer tend to effectuate the declared policy of the Act and should be terminated.

Specifically, part 916, regulating the handling of nectarines grown in California is removed from the Code of Federal Regulations. In part 917, which regulates the handling of both pears and peaches, §§ 916.8, 917.22, 917.150, 917.258, 917.259, 917.442, and 917.459, which relate solely to peaches, are removed. §§ 917.4, 917.5, 917.6, 917.15, 917.20, 917.24, 917.25, 917.26, 917.28, 917.29, 917.34, 917.35, 917.37, 917.100, 917.119, and 917.143 are revised to remove references to peaches and to conform to removal of other sections. In some sections of part 917, language relating to the regulation of pears is currently suspended. Such suspensions are lifted to facilitate revision of these sections. Finally, the remaining provisions and administrative rules and regulations under part 917 are suspended indefinitely.

Final Regulatory Flexibility Analysis

Pursuant to the requirements set forth in the Regulatory Flexibility Act (RFA) (5 U.S.C. 601–612), the Agricultural Marketing Service (AMS) has considered the economic impact of this rule on small entities. Accordingly, AMS has prepared this final regulatory flexibility analysis.

The purpose of the RFA is to fit regulatory actions to the scale of business subject to such actions in order that small businesses will not be unduly or disproportionately burdened. Marketing orders issued pursuant to the Act, and the rules issued thereunder, are unique in that they are brought about through group action of essentially small entities acting on their own behalf.

There are approximately 97 California nectarine and peach handlers subject to regulation under the orders covering nectarines and peaches grown in California, and about 447 growers of these fruits in California. Small agricultural service firms, which include handlers, are defined by the Small Business Administration (SBA)

(13 CFR 121.201) as those having annual receipts of less than $7,000,000, and small agricultural growers are defined as those having annual receipts of less than $750,000. A majority of these handlers and growers may be classified as small entities.

For the 2010 marketing season, the committees' staff estimated that the average handler price received was $10.50 per container or container equivalent of nectarines or peaches. A handler would have to ship at least 666,667 containers to have annual receipts of $7,000,000. Given data on shipments maintained by the committees' staff and the average handler price received during the 2010 season, the committees' staff estimates that approximately 46 percent of handlers in the industry would be considered small entities.

For the 2010 marketing season, the committees' staff estimated the average grower price received was $5.50 per container or container equivalent for nectarines and peaches. A grower would have to produce at least 136,364 containers of nectarines and peaches to have annual receipts of $750,000. Given data maintained by the committees' staff and the average grower price received during the 2010 season, the committees' staff estimates that more than 80 percent of the growers within the industry would be considered small entities.

This rule terminates the Federal marketing orders for nectarines and peaches grown in California, and the rules and regulations issued thereunder. USDA believes that the orders no longer meet the needs of growers and handlers. The results of recent grower referenda and experience with the industries support order terminations.

Sections 916.64 and 917.61 of the orders provide that USDA shall terminate or suspend any or all provisions of the orders when a finding is made that the orders do not tend to effectuate the declared policy of the Act. Furthermore, § 608c(16)(A) of the Act provides that USDA shall terminate or suspend the operation of any order whenever the order or provision thereof obstructs or does not tend to effectuate the declared policy of the Act. An additional provision requires that Congress be notified not later than 60 days before the date the orders would be terminated.

Although marketing order requirements are applied to handlers, the costs of such requirements are often passed on to growers. Termination of the orders, and the resulting regulatory relaxation, would therefore be expected to reduce costs for both handlers and growers.

As an alternative to this rule, AMS considered not terminating the nectarine and peach order provisions. In that case, the industries could have recommended further refinements to the orders and the handling regulations in order to meet current marketing needs. However, such changes made to the programs over the last several years have failed to improve the programs enough to warrant continuing grower support. Therefore, this alternative was rejected, and AMS recommended that the programs be terminated.

In accordance with the Paperwork Reduction Act of 1995, (44 U.S.C. Chapter 35), the information collection requirements being terminated were approved previously by the Office of Management and Budget (OMB) and assigned OMB No. 0581–0189, Generic Fruit Crops. Termination of the reporting requirements under the orders would reduce the reporting and recordkeeping burden on California nectarine and peach handlers by 339.45 hours, and should further reduce industry expenses. Since handlers would no longer be required to file forms with the Committee, this final rule does not impose any additional reporting or recordkeeping requirements on either small or large entities.

On February 25, 2011, AMS published a notice and request for comments regarding the request for OMB approval of a new information collection for nectarine and peach handlers (76 FR 10555). Five new forms were proposed for the collection of industry information that would have facilitated administration of the orders. Such information collection would have increased the annual reporting burden for industry handlers by 2,878.70 hours. The request for OMB approval of the new information collection has been withdrawn.

As with all Federal marketing order programs, reports and forms are periodically reviewed to reduce information requirements and duplication by industry and public sector agencies.

In addition, USDA has not identified any relevant Federal rules that duplicate, overlap or conflict with this rule.

AMS is committed to complying with the E-Government Act, to promote the use of the Internet and other information technologies to provide increased opportunities for citizen access to Government information and services, and for other purposes.

The grower referendum was well publicized in the production area, and referendum ballots were mailed to all known growers of nectarines and peaches in California. As well, all interested persons have been invited to attend the committees' meetings over the years and participate in discussions regarding the programs developed under the orders.

A small business guide on complying with fruit, vegetable, and specialty crop marketing agreements and orders may be viewed at: *http://www.ams.usda.gov/MarketingOrdersSmallBusinessGuide.* Any questions about the compliance guide should be sent to Laurel May at the previously mentioned address in the **FOR FURTHER INFORMATION CONTACT** section.

A proposed rule inviting comments regarding the termination of nectarines and peaches was published in the **Federal Register** on June 2, 2011 (75 FR 31888). The rule was made available by the Committees to handlers and producers. In addition the rule was made available through the Internet by the USDA and the office of the **Federal Register**. The rule provided a 15 day comment period which ended on June 17, 2011. No comments were received.

Based on the foregoing, and pursuant to § 608c(16)(A) of the Act and §§ 916.64 and 917.61 of the orders, USDA is terminating the orders, as they do not tend to effectuate the declared policy of the Act. USDA hereby appoints a Trustee Oversight Committee to conclude and liquidate the affairs of the Committee, and to continue in that capacity until discharged by USDA. The appointed Committee members are Russ Tavlan (Vice Chairman), Mike Reimer, Mark Bybee, and Rick Jackson (Chairman) of the Peach Commodity Committee and Casey Jones, Rick Jackson, Jeff Bolt (Vice Chairman) and Rod Milton (Chairman) of the Nectarine Administrative Committee, as trustees they will oversee this liquidation.

Section 8c(16)(A) of the Act requires USDA to notify Congress at least 60 days before terminating a Federal marketing order program. USDA notified Congress on July 5, 2011 of its intention to terminate this marketing order.

It is further found that good cause exists for not postponing the effective date of this rule until 30 days after publication in the **Federal Register** (5 U.S.C. 553) because (1) This action relieves restrictions on handlers by terminating the requirements of the nectarine and peach orders, (2) A proposed rule inviting comments regarding the termination of nectarines and Peaches was published in the **Federal Register** on June 2, 2011 (75 FR 31888) and no comments were received, (3) all handling regulations have been suspended under the order for nectarine

and peaches since April 19, 2011, and (4) no useful purpose would be served by delaying the effective date.

List of Subjects

7 CFR Part 916

Marketing agreements, Nectarines, Reporting and recordkeeping requirements.

7 CFR Part 917

Marketing agreements, Peaches, Pears, Reporting and recordkeeping requirements.

For the reasons set forth in the preamble, 7 CFR part 916 is removed and 7 CFR part 917 is amended as follows:

■ 1. The authority citation for 7 CFR parts 916 and 917 continues to read as follows:

Authority: 7 U.S.C. 601–674.

PART 916—NECTARINES GROWN IN CALIFORNIA

■ 2. 7 CFR part 916 is removed.

PART 917—FRESH PEARS AND PEACHES GROWN IN CALIFORNIA

■ 3. In part 917, §§ 917.1 through 917.3, § 917.7, § 917.9, §§ 917.11 through 917.14, §§ 917.16 through 917.19, § 917.27, §§ 917.30 through 917.33, § 917.36, §§ 917.38 through 917.43, § 917.45, § 917.50, §§ 917.60 through 917.69, §§ 917.101, § 917.103, § 917.110, § 917.115, and § 917.122 are suspended indefinitely.

§ 917.4 [Amended]

■ 4. In § 917.4, lift the suspension of July 21, 2006 (71 FR 41351); remove paragraphs (a) and (b); redesignate paragraph (c) as paragraph (a); add and reserve paragraph (b); and suspend the section indefinitely.

§ 917.5 [Amended]

■ 5. In § 917.5, remove the second sentence and suspend the section indefinitely.

§ 917.6 [Amended]

■ 6. In § 917.6, remove the words ''That for peaches, packing or causing the fruit to be packed also constitutes handling; Provided further,'' and suspend the section indefinitely.

§ 917.8 [Removed]

■ 7. Remove § 917.8.

§ 917.15 [Amended]

■ 8. In § 917.15, lift the suspension of March 3, 1994 (59 FR 10055), remove the words ''§§ 917.21 through 917.22'' and add in their place the words ''§ 917.21,'' and suspend the section indefinitely.

§ 917.20 [Amended]

■ 9. In § 917.20, lift the suspension of March 3, 1994 (59 FR 10055), and revise the section to read as follows, and suspend the section indefinitely:

§ 917.20 Designation of members of commodity committees.

There is hereby established a Pear Commodity Committee consisting of 13 members. Each commodity committee may be increased by one public member nominated by the respective commodity committee and selected by the Secretary. The members of each said committee shall be selected biennially for a term ending on the last day of February of odd numbered years, and such members shall serve until their respective successors are selected and have qualified. The members of each commodity committee shall be selected in accordance with the provisions of § 917.25.

§ 917.22 [Removed]

■ 10. Remove § 917.22.

§ 917.24 [Amended]

■ 11. In § 917.24, lift the suspensions of March 3, 1994 (59 FR 10055), and February 21, 2007 (72 FR 7821); revise the section to read as follows; and suspend the section indefinitely:

§ 917.24 Procedure for nominating members of various commodity committees.

(a) The Control Committee shall hold or cause to be held not later than February 15 for pears of each odd numbered year a meeting or meetings of the growers of the fruits in each representation area set forth in § 917.21. These meetings shall be supervised by the Control Committee, which shall prescribe such procedures as shall be reasonable and fair to all persons concerned.

(b) With respect to each commodity committee, only growers of the particular fruit who are present at such nomination meetings or represented at such meetings by duly authorized employees may participate in the nomination and election of nominees for commodity committee members and alternates. Each such grower, including employees of such grower, shall be entitled to cast but one vote for each position to be filled for the representation area in which he produces such fruit.

(c) A particular grower, including employees of such growers, shall be eligible for membership as principle or alternate to fill only one position on a commodity committee. A grower nominated for membership on the Pear Commodity Committee must have produced at least 51 percent of the pears shipped by him during the previous fiscal period, or he must represent an organization which produced at least 51 percent of the pears shipped by it during such period.

§ 917.25 [Amended]

■ 12. In § 917.25, lift the suspension of July 1, 2006 (71 FR 41352), remove and reserve paragraph (b), and suspend the section indefinitely.

§ 917.26 [Amended]

■ 13. In § 917.26, lift the suspension of March 3, 1994 (59 FR 10055), remove the words ''§§ 917.21 and 917.22'' and add in their place the word ''§ 917.21,'' and suspend the section indefinitely.

§ 917.28 [Amended]

■ 14. In § 917.28, lift the suspension of March 3, 1994 (59 FR 10055), remove the words ''§§ 917.16, 917.21, and 917.22'' and add in their place the words ''§§ 917.16 and 917.21,'' and suspend the section indefinitely.

§ 917.29 [Amended]

■ 15. In § 917.29, lift the suspension of March 3, 1994 (59 FR 10055), remove the words ''and of the Peach Commodity Committee'' and ''each'' from paragraph (b), remove the final sentence of paragraph (d), and suspend the section indefinitely.

§ 917.34 [Amended]

■ 16. In § 917.34, lift the suspension of March 3, 1994 (59 FR 10055), remove the words ''§§ 917.21 and 917.22'' in paragraph (k) and add in their place the word ''§ 917.21'', and suspend the section indefinitely.

§ 917.35 [Amended]

■ 17. In § 917.35, lift the suspension of March 3, 1994 (59 FR 10055), remove the words ''Peach and'' and ''each'' wherever they appear in paragraph (a), remove the final sentence of paragraph (d), and suspend the section indefinitely.

§ 917.37 [Amended]

■ 18. In § 917.37, remove the final three sentences of paragraph (b) and suspend the section indefinitely.

§ 917.100 [Amended]

■ 19. In § 917.100, lift the suspension of March 3, 1994 (59 FR 10055), remove the words ''and peaches'', and suspend the section indefinitely.

§ 917.119 [Amended]

■ 20. In § 917.119, remove paragraph (a), redesignate paragraphs (b) through (e) as paragraphs (a) through (d), and suspend the section indefinitely.

§ 917.143 [Amended]

■ 21. In § 917.143, lift the suspension of April 18, 2011 (76 FR 21618); remove the words ''and peaches'' from the introductory text of paragraph (b) and from paragraphs (b)(1), (b)(2), and (b)(4); remove the words ''and 200 pounds of peaches'' from paragraph (b)(3); and suspend the section indefinitely.

§ 917.150 [Removed]

■ 22. Remove § 917.150.

Subpart—Assessment Rates (§§ 917.258 through 917.259) [Removed]

■ 23. Remove Subpart—Assessment Rates, consisting of §§ 917.258 through 917.259.

Subpart—Container and Pack Regulation (§§ 917.442) [Removed]

■ 24. Remove Subpart—Container and Pack Regulation, consisting of § 917.442.

§ 917.459 [Removed]

■ 25. Remove §§ 917.459.

Dated: October 14, 2011.

David R. Shipman,

Acting Administrator, Agricultural Marketing Service.

[FR Doc. 2011–27286 Filed 10–26–11; 8:45 am]

BILLING CODE 3410–02–P

DEPARTMENT OF TRANSPORTATION

Federal Aviation Administration

14 CFR Part 39

[Docket No. FAA–2011–0939; Directorate Identifier 2010–SW–067–AD; Amendment 39 16798; AD 2011–18–16]

RIN 2120–AA64

Airworthiness Directives; Eurocopter France (Eurocopter) Model AS332C, AS332L, AS332L1, and AS332L2 Helicopters

AGENCY: Federal Aviation Administration, DOT.

ACTION: Final rule; request for comments.

SUMMARY: This amendment adopts a new airworthiness directive (AD) for the specified Eurocopter model helicopters. This action requires inspecting the upper end fitting ball joints of the main rotor servocontrols for lateral play, and depending on the findings either repetitively inspecting the ball joint or replacing the servocontrol. This amendment is prompted by reports of noncompliant swaging of the end fitting ball joints on main rotor servocontrols. Investigation has shown that the swaging load applied to the ball joints was 1.3 metric tons instead of the specified 13 metric tons. The actions specified in this AD are intended to prevent failure of the upper end fitting ball joints of the main rotor servocontrols, failure of the upper end fittings, and loss of control of the helicopter.

DATES: Effective November 14, 2011.

Comments for inclusion in the Rules Docket must be received on or before December 27, 2011.

ADDRESSES: Use one of the following addresses to submit comments on this AD:

- *Federal eRulemaking Portal:* Go to *http://www.regulations.gov.* Follow the instructions for submitting comments.
- *Fax:* 202–493–2251.
- *Mail:* U.S. Department of Transportation, Docket Operations, M–30, West Building Ground Floor, Room W12–140, 1200 New Jersey Avenue, SE., Washington, DC 20590.
- *Hand Delivery:* U.S. Department of Transportation, Docket Operations, M–30, West Building Ground Floor, Room W12–140, 1200 New Jersey Avenue, SE., Washington, DC 20590, between 9 a.m. and 5 p.m., Monday through Friday, except Federal holidays.

You may get the service information identified in this AD from American Eurocopter Corporation, 2701 Forum Drive, Grand Prairie, TX 75053–4005, telephone (800) 232–0323, fax (972) 641–3710, or at *http://www.eurocopter.com.*

Examining the Docket: You may examine the docket that contains the AD, any comments, and other information on the Internet at *http://www.regulations.gov,* or in person at the Docket Operations office between 9 a.m. and 5 p.m., Monday through Friday, except Federal holidays. The Docket Operations office (telephone (800) 647 5527) is located in Room W12–140 on the ground floor of the West Building at the street address stated in the **ADDRESSES** section. Comments will be available in the AD docket shortly after receipt.

FOR FURTHER INFORMATION CONTACT: Gary Roach, Aviation Safety Engineer, FAA, Rotorcraft Directorate, Regulations and Guidance Group, 2601 Meacham Blvd., Fort Worth, Texas 76137, telephone (817) 222–5130, fax (817) 222–5961.

SUPPLEMENTARY INFORMATION:

Discussion

The European Aviation Safety Agency (EASA), which is the Technical Agent for the Member States of the European Union, has issued EASA AD No. 2010–0117–E, dated June 16, 2010, to correct an unsafe condition for the specified Eurocopter model helicopters. EASA advises that the equipment manufacturer (Goodrich) has identified two servocontrol production batches as noncompliant with swaging of the end fitting ball joints on main rotor servocontrols. EASA states that investigations have revealed that the swaging load applied to the ball joints in these two batches was 1.3 metric tons, instead of the specified 13 metric tons, which could lead the ball joints to slip in service. The slipping of the ball joint of the servocontrol lower end fitting does not significantly affect the service life of the end fitting. However, the slipping of the ball joint of the servocontrol upper end fitting can lead to a significant reduction in the service life of the end fitting. This condition, if not corrected, could lead to failure of the upper end fitting ball joint of a main rotor servocontrol and result in loss of control of the helicopter.

Differences Between This AD and the EASA AD

We refer to flight hours as hours time-in-service (TIS).

Related Service Information

Eurocopter has issued an Emergency Alert Service Bulletin (EASB), dated June 15, 2010, with two numbers: No. 67.00.40 for FAA type-certificated Models AS332C, L, L1, and L2 and for Models AS332C1, B, B1, F1, M, and M1 that are not FAA type certificated, and No. 67.00.27 for Models AS532AC, AL, SC, UC, UE, UL, A2, and U2 that are not FAA type certificated. The EASB specifies checking and restoring conformity of the affected end fitting ball joints of the servocontrols. The EASB contains Appendix 1 and 2, Goodrich Service Bulletins No. SC7203–67–31–02 and No. SC7221–67–39–02, both dated May 11, 2010, which specify the process for comforming each affected servocontrol. EASA classified this EASB as mandatory and issued Emergency AD No. 2010–0117–E, dated June 16, 2010, to ensure the continued airworthiness of these helicopters.

FAA's Evaluation and Unsafe Condition Determination

These helicopters have been approved by the aviation authority of France and are approved for operation in the United States. Pursuant to our bilateral agreement with France, EASA, their technical representative, has notified us of the unsafe condition described in the EASA AD. We are issuing this AD because we evaluated all information provided by EASA and determined the

unsafe condition exists and is likely to exist or develop on other helicopters of these same type designs.

Eurocopter states that there are currently no helicopters with the affected part installed in the United States. However, this rule is necessary to ensure that the described unsafe condition is addressed in the event this part is installed on any helicopter in the future.

Costs of Compliance

There are no costs of compliance assuming that there are no helicopters on the U.S. Registry with the affected part installed as represented by the manufacturer.

FAA's Determination of the Effective Date

This unsafe condition is likely to exist or develop on other helicopters of these same type designs. Therefore, this AD is being issued to prevent failure of the upper end fitting ball joints of the main rotor servocontrols, failure of the upper end fittings, and loss of control of the helicopter. Since there are currently no U.S. registered helicopters with the affected part installed, we have determined that notice and opportunity for prior public comment before issuing this AD are unnecessary and that good cause exists for making this amendment effective in less than 30 days.

Requirements of This AD

This AD requires:

- Within 15 hours TIS, unless accomplished previously, using a feeler gage, measuring the lateral play between the outer ring of the ball joint and each of the two faces of the upper end fitting.
- If the lateral play is greater than or equal to 1 millimeter (MM) (0.04 inch) and the servocontrol has accumulated 825 or more hours TIS, replacing it with an airworthy servocontrol before further flight.
- If the lateral play is greater than or equal to 1 mm (0.04 inch) and the servocontrol has accumulated less than 825 hours TIS, on or before the servocontrol accumulates 825 hours TIS, replacing it with an airworthy servocontrol.
- If the lateral play is less than 1 mm (0.04 inch), thereafter, at intervals not to exceed 300 hours TIS, repeating the inspection. At each 300-hour TIS inspection, if the lateral play is greater than or equal to 1 mm (0.04 inch), within 525 hours TIS, replacing the servocontrol with an airworthy servocontrol.
- Replacing the servocontrol with an airworthy servocontrol that is not included in the AD applicability or that is modified with a letter ''R'' after the S/N constitutes terminating action for the requirements of this AD.

Because these affected parts have an unlimited operational fatigue life with no previous fatigue inspections required, the replacement criteria of this AD assumes that the affected servocontrols found to have greater than or equal to 1 MM of lateral play have already been operated for at least 825 hours TIS with this fatigue damage and must be replaced at 825 hours TIS or if they have already accumulated 825 or more hours TIS, within 15 hours TIS of the effective date of this AD. However, if a subsequent 300-hour TIS repetitive inspection required by this AD reveals lateral play of 1 MM or greater, those affected servocontrols may be operated an additional 525 hours TIS because the previous 300-hours TIS inspection established the new baseline for the 825 hours TIS thereby allowing an additional 525 hours TIS before replacement.

Comments Invited

This AD is a final rule that involves requirements that affect flight safety and was not preceded by notice and an opportunity for public comment; however, we invite you to submit any written data, views, or arguments regarding this AD. Send your comments to an address listed under **ADDRESSES**. Include FAA Docket No. ''FAA–2011–0939; Directorate Identifier 2010–SW–067–AD'' at the beginning of your comments. We specifically invite comments on the overall regulatory, economic, environmental, and energy aspects of the AD. We will consider all comments received by the closing date and may amend the AD in light of those comments.

We will post all comments we receive, without change, to *http://www.regulations.gov,* including any personal information you provide. We will also post a report summarizing each substantive verbal contact with FAA personnel concerning this AD. Using the search function of the docket Web site, you can find and read the comments to any of our dockets, including the name of the individual who sent the comment. You may review the DOT's complete Privacy Act Statement in the **Federal Register** published on April 11, 2000 (65 FR 19477 78).

Regulatory Findings

We have determined that notice and prior public comment are unnecessary in promulgating this regulation; therefore, it can be issued immediately to correct an unsafe condition in aircraft because none of the model helicopters that are registered in the United States have the affected part installed. We have also determined that this regulation is not a ''significant regulatory action'' under Executive Order 12866. It has been determined further that this action involves an emergency regulation under DOT Regulatory Policies and Procedures (44 FR 11034, February 26, 1979). If it is determined that this emergency regulation otherwise would be significant under DOT Regulatory Policies and Procedures, a final regulatory evaluation will be prepared and placed in the AD docket.

Authority for This Rulemaking

Title 49 of the United States Code specifies the FAA's authority to issue rules on aviation safety. Subtitle I, Section 106, describes the authority of the FAA Administrator. Subtitle VII, Aviation Programs, describes in more detail the scope of the Agency's authority.

We are issuing this rulemaking under the authority described in Subtitle VII, Part A, Subpart III, Section 44701, ''General requirements.'' Under that section, Congress charges the FAA with promoting safe flight of civil aircraft in air commerce by prescribing regulations for practices, methods, and procedures the Administrator finds necessary for safety in air commerce. This regulation is within the scope of that authority because it addresses an unsafe condition that is likely to exist or develop on products identified in this rulemaking action.

List of Subjects in 14 CFR Part 39

Air transportation, Aircraft, Aviation safety, Incorporation by reference Safety.

Adoption of the Amendment

Accordingly, pursuant to the authority delegated to me by the Administrator, the Federal Aviation Administration amends part 39 of the Federal Aviation Regulations (14 CFR part 39) as follows:

PART 39—AIRWORTHINESS DIRECTIVES

■ 1. The authority citation for part 39 continues to read as follows:

Authority: 49 U.S.C. 106(g), 40113, 44701.

§ 39.13 [Amended]

■ 2. Section 39.13 is amended by adding a new airworthiness directive (AD) to read as follows:

2011–18–16 Eurocopter France: Amendment 39–16798; Docket No. FAA 2011–0939; Directorate Identifier 2010–SW–067–AD.

Applicability: Models AS332C, L, L1, and L2 helicopters, with main rotor servocontrols, part number (P/N) SC7203–1 with serial number (S/N) 633 through 643, 645 through 659, 664 or 665, or P/N SC7221–1 with S/N 1693 through 1723 and 1726 or 1727, which are not marked with a letter ''R'' after the S/N, certificated in any category.

Compliance: Required as indicated.

To prevent failure of the upper end fitting ball joints of the main rotor servocontrols, failure of the upper end fittings, and loss of control of the helicopter, do the following:

(a) Within 15 hours time-in-service (TIS), unless accomplished previously, using a feeler gage, measure the lateral play between the outer ring of the ball joint and each of the two faces of the upper end fitting as depicted in Figure 1 of this AD.

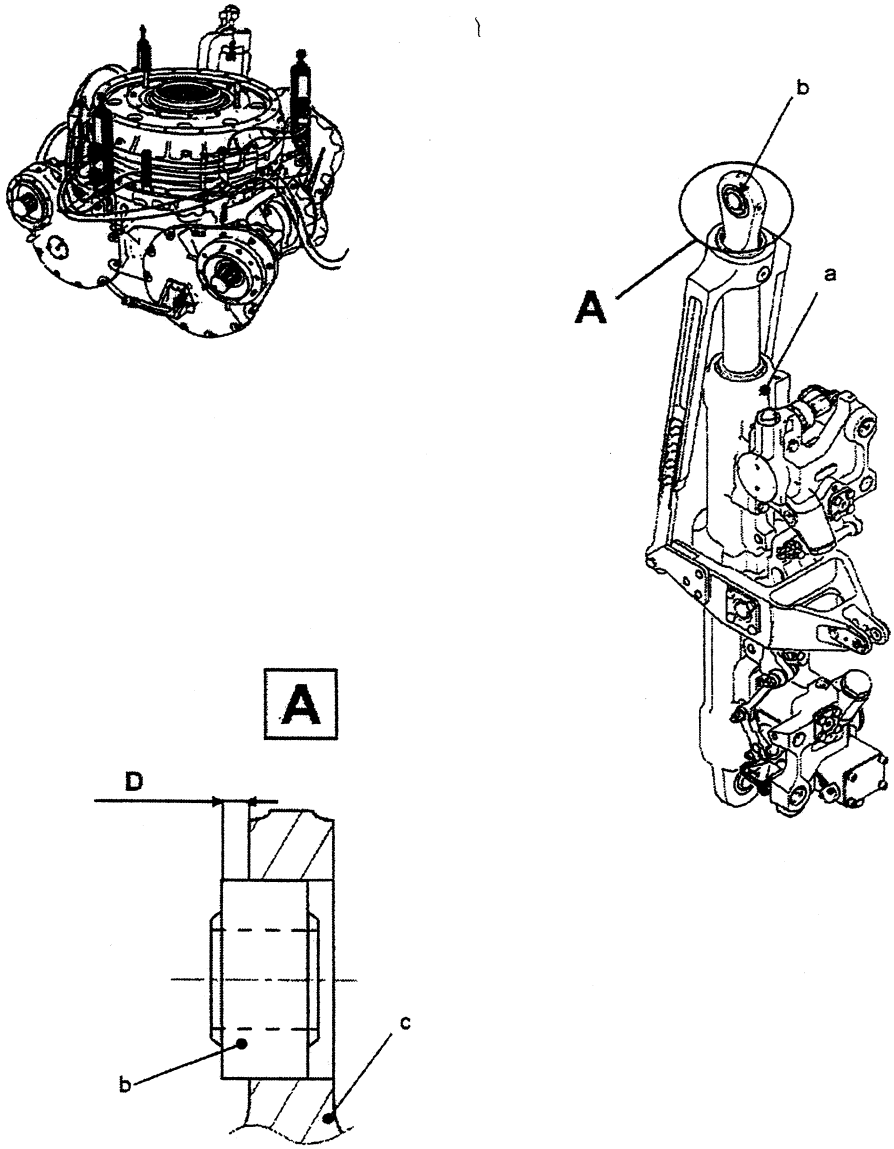

Figure 1

(b) If the lateral play is greater than or equal to 1 millimeter (MM) (0.04 inch) and the servocontrol has accumulated 825 or more hours TIS, before further flight, replace it with an airworthy servocontrol.

(c) If the lateral play is greater than or equal to 1 mm (0.04 inch) and the servocontrol has accumulated less than 825 hours TIS, on or before the servocontrol accumulates 825 hours TIS, replace it with an airworthy servocontrol.

(d) If the lateral play is less than 1 mm (0.04 inch), at intervals not to exceed 300 hours TIS, repeat the inspection required by paragraph (a) of this AD. At each 300 hour TIS interval inspection, if the lateral play is greater than or equal to 1 mm (0.04 inch), within 525 hours TIS, replace the servocontrol with an airworthy servocontrol.

Note 1: An acceptable method of returning the servocontrol to an airworthy condition

for the purposes of this AD is by modifying the servocontrol and marking an ''R'' after the S/N by following Goodrich Service Bulletin (SB) No. SC7203–67–31–02, dated May 11, 2010, for servocontrol, P/N SC7203–1, or Goodrich SB No. SC72216739–02, dated May 11, 2010, for servocontrol, P/N SC7221 1. The Goodrich SBs are attached to Eurocopter Emergency Alert SB containing two numbers (67.00.40 and 67–00.27), dated June 15, 2010 as Appendix 1 and Appendix 2, respectively. None of these three SBs is incorporated by reference in this AD.

(e) Replacing a servocontrol with an airworthy servocontrol that is marked with a letter ''R'' by the manufacturer after the S/N constitutes terminating action for the requirements of this AD.

(f) To request a different method of compliance or a different compliance time for this AD, follow the procedures in 14 CFR 39.19. Contact the Manager, Safety Management Group, Rotorcraft Directorate, FAA, ATTN: Gary Roach, Aviation Safety Engineer, FAA, Regulations and Guidance Group, 2601 Meacham Blvd, Fort Worth, Texas 76137, telephone (817) 222–5130, fax (817) 222 5961, for information about previously approved alternative methods of compliance.

(g) The Joint Aircraft System/Component (JASC) Code is 6730: Rotorcraft Servo System.

(h) This amendment becomes effective on November 14, 2011.

Note 2: The subject of this AD is addressed in European Aviation Safety Agency Emergency AD No. 2010–0117–E, dated June 16, 2010.

Issued in Fort Worth, Texas, on August 23, 2011.

Kim Smith,

Manager, Rotorcraft Directorate, Aircraft Certification Service.

[FR Doc. 2011–27673 Filed 10–26–11; 8:45 am]

BILLING CODE 4910–13–P

DEPARTMENT OF TRANSPORTATION

Federal Aviation Administration

14 CFR Part 39

[Docket No. FAA–2011–1035; Directorate Identifier 2011–SW–038–AD; Amendment 39–16817; AD 2011–15–51]

RIN 2120–AA64

Airworthiness Directives; Bell Helicopter Textron Canada (Bell) Model 407 and 427 Helicopters

AGENCY: Federal Aviation Administration, DOT.

ACTION: Final rule; request for comments.

SUMMARY: This document publishes in the **Federal Register** an amendment adopting Airworthiness Directive (AD) 2011–15–51, which was sent previously to all known U.S. owners and operators of the specified Bell Model 407 and 427 helicopters by individual letters. This AD requires inspecting certain hydraulic servo actuators to determine whether the shaft turns independently of the nut or the clevis assembly. If the shaft turns independently, this AD requires replacing the servo with an airworthy servo. If the shaft does not turn independently, the AD requires inspecting to determine the condition of the lock washers. Based on the condition of the lock washers, the AD requires either replacing the servo with an airworthy servo, or if any tab of the lock washer is not flush against a flat surface of the nut or clevis assembly, bending it flush against a flat surface. The AD also requires reidentifying the servo by metal-impression stamping or by vibro-etching ''67.01'' onto the modification plate. Also, the AD requires before installing a servo with a part number or serial number identified in this AD, not identified by ''67–01'' on the modification plate, inspecting it by following the requirements of this AD. This AD is prompted by a report that a quality escape by a supplier has occurred and certain servos may have a loose nut, shaft, and clevis assembly due to improper lock-washer installation. An investigation after an accident revealed the clevis nut on the servo was loose. The actions specified by this AD are intended to prevent a malfunction of a servo in the flight control system and subsequent loss of control of the helicopter.

DATES: Effective November 14, 2011, to all persons except those persons to whom it was made immediately effective by Emergency AD 2011–15–51, issued on July 8, 2011, which contained the requirements of this amendment.

The incorporation by reference of certain publications listed in the regulations is approved by the Director of the Federal Register as of November 14, 2011.

Comments for inclusion in the Rules Docket must be received on or before December 27, 2011.

ADDRESSES: Use one of the following addresses to submit comments on this AD:

- *Federal eRulemaking Portal:* Go to *http://www.regulations.gov.* Follow the instructions for submitting comments.
- *Fax:* 202–493–2251.
- *Mail:* U.S. Department of Transportation, Docket Operations, M–30, West Building Ground Floor, Room W12–140, 1200 New Jersey Avenue, SE., Washington, DC 20590.
- *Hand Delivery:* U.S. Department of Transportation, Docket Operations, M–30, West Building Ground Floor, Room W12–140, 1200 New Jersey Avenue, SE., Washington, DC 20590, between 9 a.m. and 5 p.m., Monday through Friday, except Federal holidays.

You may get the service information identified in this AD from Bell Helicopter Textron Canada Limited, 12,800 Rue de l'Avenir, Mirabel, Quebec J7J1R4, telephone (450) 437–2862 or (800) 363–8023, fax (450) 433–0272, or at *http://www.bellcustomer.com/files/.*

Examining the Docket: You may examine the docket that contains the AD, any comments, and other information on the Internet at *http://www.regulations.gov,* or in person at the Docket Operations office between 9 a.m. and 5 p.m., Monday through Friday, except Federal holidays. The Docket Operations office (telephone (800) 647–5527) is located in Room W12–140 on the ground floor of the West Building at the street address stated in the **ADDRESSES** section. Comments will be available in the AD docket shortly after receipt.

FOR FURTHER INFORMATION CONTACT: Matt Wilbanks, Aviation Safety Engineer, 2601 Meacham Blvd, Fort Worth, Texas 76137, telephone (817) 222–5051, fax (817) 222–5961.

SUPPLEMENTARY INFORMATION: On July 8, 2011, the FAA issued Emergency AD 2011–15–51 for the specified model helicopters, which requires inspecting certain servos to determine whether the shaft turns independently of the nut or the clevis assembly. If the shaft turns independently, the AD requires replacing the servo with an airworthy servo. If the shaft does not turn independently, the AD requires inspecting to determine the condition of the lock washers. If at least one lock washer is not bent flush against a flat surface of the nut and at least one tab of the lock washer is not bent flush against a flat surface of the clevis assembly, the AD requires replacing the servo with an airworthy servo. If any tab of the lock washer is not bent flush against either a flat surface of the nut or clevis assembly, the AD requires bending the tab flush against a flat surface. The AD also requires reidentifying the servo by metal-impression stamping or by vibro-etching ''67.01'' onto the modification plate. Also, the AD requires before installing a servo with a part number or serial number identified in this AD, not identified by ''67–01'' on the modification plate, inspecting and reidentifying it by following the requirements of this AD. That action was prompted by a report that a quality escape by a supplier has occurred and certain servos may have a loose nut,

shaft, and clevis assembly due to improper lock-washer installation. An investigation after an accident revealed the clevis nut on the servo was loose. This condition, if not corrected, could result in a malfunction of a servo in the flight control system and subsequent loss of control of the helicopter.

Transport Canada, the airworthiness authority for Canada, notified the FAA that an unsafe condition may exist on these helicopter models. Transport Canada advises that a quality escape by a supplier has occurred, and a number of servos may have a loose nut, shaft, and clevis assembly. Transport Canada states in its AD that the loose connection is due to improper lock-washer installation, which is not traceable or identifiable except by inspection. The authority also states a disconnect of the affected parts may lead to loss of control of the helicopter.

Bell has issued Alert Service Bulletin (ASB) 407–11–96 and 427–11–35, both dated June 29, 2011, which specify the part numbers and serial numbers of the affected servos and refer to ASB 407–05–70, Revision A, dated November 10, 2005; ASB 427–05–12, Revision A, dated November 14, 2005; with HR Textron Service Bulletin (SB) 41011300–67–01, Revision 2, dated November 9, 2005; HR Textron SB 41011400–67–01, Revision 2, dated November 9, 2005; and HR Textron SB 41011700–67–01, Revision 2, dated November 9, 2005, attached. The ASBs also specify reidentifying the servos with a ''67–01'' on the modification plate indicating the inspection procedures were followed.

Transport Canada classified the ASBs as mandatory and issued AD No. CF–2011–17, dated June 30, 2011, to ensure the continued airworthiness of these helicopters.

This helicopter model is manufactured in Canada and is type certificated for operation in the United States under the provisions of 14 CFR 21.29 and the applicable bilateral agreement. Pursuant to the applicable bilateral agreement, Transport Canada has kept us informed of the situation described above. We have examined the findings of Transport Canada, reviewed all available information, and determined that AD action is necessary for helicopters of this type design that are certificated for operation in the United States.

Since the unsafe condition described is likely to exist or develop on other Bell Model 407 and 427 helicopters of these same type designs, the FAA issued Emergency AD 2011–15–51 to prevent a malfunction of a servo in the flight control system and subsequent loss of control of the helicopter. The AD requires before further flight for certain affected servos and within 25 hours time-in-service for certain other affected servos, identified by a serial number, retracting the boot and inspecting the servo as follows:

- Applying only hand pressure, determining whether the nut, shaft, or clevis assembly turns independently. If the shaft turns independently of the nut or the clevis assembly, before further flight, replacing the servo with an airworthy servo.
- If the shaft does not turn independently, inspecting to determine whether at least one tab of a lock washer is bent flush against a flat surface of the nut and at least one tab of the lock washer is bent flush against a flat surface of the clevis assembly.
- If at least one lock washer tab is not aligned and bent flush with a flat surface of the nut and at least one lock washer tab is not aligned and bent flush with a flat surface of the clevis assembly, before further flight, replacing the servo with an airworthy servo.
- If any tab of the lock washer is not bent flush against either a flat surface of the nut or clevis assembly, bend the tab flush against a flat surface.
- Reidentifying the servo by metal-impression stamping or by vibro-etching ''67.01'' onto the modification plate.
- Before installing a servo with a P/N and S/N identified in this AD, not identified by ''67–01'' on the modification plate, inspecting it by following the requirements of this AD.

This AD differs from the Transport Canada AD in that we do not require that the servo be returned to the manufacturer. Also, we do not limit the applicability to specific serial-numbered helicopters. We have specified the inspection requirements rather than referring to the applicable service bulletins. The AD requires that the servo be replaced before further flight, and the Transport Canada AD refers to the ASB, which requires that the servo be replaced within 300 hours time-in-service.

The short compliance time involved is required because the previously described critical unsafe condition can adversely affect the controllability of the helicopter. Therefore, inspecting the servos for specified conditions and replacing any affected servo, as necessary, are required before further flight, and this AD must be issued immediately.

Since it was found that immediate corrective action was required, notice and opportunity for prior public comment thereon were impracticable and contrary to the public interest, and good cause existed to make the AD effective immediately by individual letters issued on July 8, 2011, to all known U.S. owners and operators of Bell Model 407 and 427 helicopters. These conditions still exist, and the AD is hereby published in the **Federal Register** as an amendment to 14 CFR 39.13 to make it effective to all persons.

We estimate that this AD will affect 582 helicopters of U.S. registry, and inspecting or replacing an affected servo will take about 2 work hours to inspect and 2 work hours to replace per helicopter at an average labor rate of $85 per work hour. Required parts will cost about $33,000 per helicopter. Based on these figures, we estimate the total cost impact of the AD on U.S. operators to be $164,940, assuming 2 servos are replaced on the entire fleet.

Comments Invited

This AD is a final rule that involves requirements that affect flight safety and was not preceded by notice and an opportunity for public comment; however, we invite you to submit any written data, views, or arguments regarding this AD. Send your comments to an address listed under **ADDRESSES**. Include ''Docket No. FAA–2011–1035; Directorate Identifier 2011–SW–038–AD'' at the beginning of your comments. We specifically invite comments on the overall regulatory, economic, environmental, and energy aspects of the AD. We will consider all comments received by the closing date and may amend the AD in light of those comments.

We will post all comments we receive, without change, to *http://www.regulations.gov,* including any personal information you provide. We will also post a report summarizing each substantive verbal contact with FAA personnel concerning this AD. Using the search function of our docket Web site, you can find and read the comments to any of our dockets, including the name of the individual who sent the comment. You may review the DOT's complete Privacy Act Statement in the **Federal Register** published on April 11, 2000 (65 FR 19477–78).

Regulatory Findings

We have determined that this AD will not have federalism implications under Executive Order 13132. This AD will not have a substantial direct effect on the States, on the relationship between the national Government and the States, or on the distribution of power and responsibilities among the various levels of government.

For the reasons discussed above, I certify that the regulation:

1. Is not a ''significant regulatory action'' under Executive Order 12866;

2. Is not a ''significant rule'' under the DOT Regulatory Policies and Procedures (44 FR 11034, February 26, 1979); and

3. Will not have a significant economic impact, positive or negative, on a substantial number of small entities under the criteria of the Regulatory Flexibility Act.

We prepared an economic evaluation of the estimated costs to comply with this AD. See the AD docket to examine the economic evaluation.

Authority for This Rulemaking

Title 49 of the United States Code specifies the FAA's authority to issue rules on aviation safety. Subtitle I, Section 106, describes the authority of the FAA Administrator. Subtitle VII, Aviation Programs, describes in more detail the scope of the Agency's authority.

We are issuing this rulemaking under the authority described in Subtitle VII, Part A, Subpart III, Section 44701, ''General requirements.'' Under that section, Congress charges the FAA with promoting safe flight of civil aircraft in air commerce by prescribing regulations for practices, methods, and procedures the Administrator finds necessary for safety in air commerce. This regulation is within the scope of that authority because it addresses an unsafe condition that is likely to exist or develop on products identified in this rulemaking action.

List of Subjects in 14 CFR Part 39

Air transportation, Aircraft, Aviation safety, Incorporation by reference, Safety.

Adoption of the Amendment

Accordingly, pursuant to the authority delegated to me by the Administrator, the Federal Aviation Administration amends part 39 of the Federal Aviation Regulations (14 CFR part 39) as follows:

PART 39—AIRWORTHINESS DIRECTIVES

■ 1. The authority citation for part 39 continues to read as follows:

Authority: 49 U.S.C. 106(g), 40113, 44701.

§ 39.13 [Amended]

■ 2. Section 39.13 is amended by adding a new airworthiness directive to read as follows:

2011–15–51 Bell Helicopter Textron, Inc. (Bell): Amendment 39–16817; Docket No. FAA–2011–1035; Directorate Identifier 2011–SW–038–AD.

Applicability: Model 407 helicopters with a hydraulic servo actuator assembly (servo), part number (P/N) 206–076–062–105, or –107 and Model 427 helicopters, with servo, P/N 206–076–062–109 or –111, installed, certificated in any category.

Compliance: Required as indicated, unless accomplished previously.

To detect loose or misaligned parts of the servo that could lead to failure of the servo and subsequent loss of control of the helicopter, do the following:

(a) Before further flight, for those helicopters with a servo serial number (S/N) on the modification plate listed in Table 1 of Bell Alert Service Bulletin (ASB) No. 407–11–96, dated June 29, 2011, for the Model 407 helicopters or Table 1 of ASB 427–11–35, dated June 29, 2011, for the Model 427 helicopters, do the following:

(1) Retract the boot depicted as ''230'' in Figure 1 of this AD:

Note 1: Bell ASB 427–05–12, Revision A, dated November 14, 2005; HR Textron SBs 41011300–67–01, 41011400–67–01, and 41011700–67–01, all Revision 2, all dated November 9, 2005, which are not incorporated by reference, contain information pertaining to the subject of this AD.

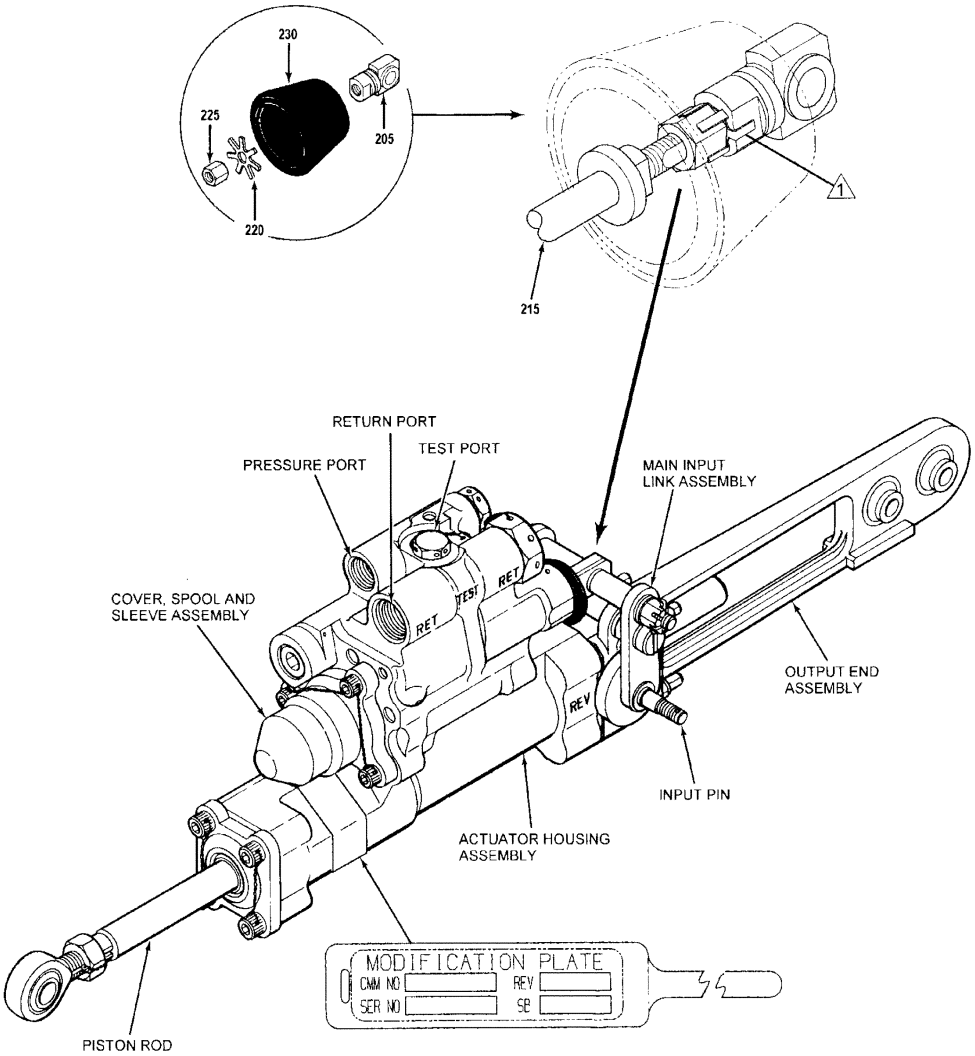

NOTE:

1 ACCEPTABLE CONDITION
A MINIMUM OF ONE TAB SHALL BE IN LINE AND BENT FLUSH WITH THE NUT FLAT SURFACE AND A MINIMUM OF ONE TAB SHALL BE IN LINE AND BENT FLUSH WITH THE CLEVIS ASSEMBLY FLAT SURFACE

Clevis Assembly
Figure 1

Legend:
205 Clevis Assembly
215 Shaft
225 Nut
220 Lock Washer
230 Boot

(2) Applying only hand pressure, determine whether the nut, shaft, or clevis assembly, depicted as ''225,'' ''215,'' and ''205,'' respectively, in Figure 1 of this AD, turns independently. If the shaft turns independently of the nut or the clevis assembly, before further flight, replace the servo with an airworthy servo.

(3) If the shaft does not turn independently, inspect to determine whether at least one tab of the lock washer is bent flush against a flat surface of the nut and at least one tab of the lock washer is bent flush against a flat surface of the clevis assembly.

(i) If at least one lock washer tab is not aligned and bent flush with a nut flat surface and at least one lock washer tab is not aligned and bent flush with a flat surface of the clevis assembly, before further flight, replace the servo with an airworthy servo.

(ii) If any tab of the lock washer is not bent flush against either a flat surface of the nut or clevis assembly, bend the tab flush against a flat surface.

(4) After accomplishing paragraph (a)(1) through (a)(3) of this AD, reidentify the servo by metal-impression stamping or by vibro-etching ''67–01'' onto the modification plate.

(b) For those servo P/Ns with a S/N less than the S/Ns listed in the following Table A of this AD but NOT specifically included in the list of S/Ns in Table 1 referenced in paragraph (a) of this AD, within 25 hours

time-in-service, inspect the nut, shaft, and clevis assembly and accomplish the requirements of paragraphs (a)(1) through (a)(4) of this AD.

TABLE A

Helicopter model	Servo P/N	Servo prefix "HR," S/N
407	41011300–101 (BHT 206–076–062–105)	Less than 807.
	41011400–101 (BHT 206–076–062–107)	Less than 2248.
427	41011300–101 (BHT 206–076–062–111)	Less than 807.
	41011700–101 (BHT 206–076–062–109)	Less than 230.

(c) Before installing a servo with a P/N and S/N identified in paragraphs (a) or (b) of this AD, not identified by ''67–01'' on the modification plate, inspect the servo by following the requirements of this AD.

(d) To request a different method of compliance or a different compliance time for this AD, follow the procedures in 14 CFR 39.19. Contact the Manager, Safety Management Group, FAA, ATTN: Matt Wilbanks, Aviation Safety Engineer, 2601 Meacham Blvd, Fort Worth, Texas 76137, telephone (817) 222–5051, fax (817) 222–5961, for information about previously approved alternative methods of compliance.

(e) The Joint Aircraft System/Component (JASC) Code is: 6730: Rotorcraft Servo System.

(f) The affected servo serial numbers are listed in Table 1 of Bell Alert Service Bulletin (ASB) No. 407–11–96, dated June 29, 2011, for the Model 407 helicopters or Table 1 of ASB 427–11–35, dated June 29, 2011, for the Model 427 helicopters. The Director of the Federal Register approved this incorporation by reference in accordance with 5 U.S.C. 552(a) and 1 CFR part 51. Copies may be obtained from Bell Helicopter Textron Canada Limited, 12,800 Rue de l'Avenir, Mirabel, Quebec J7J1R4, telephone (450) 437–2862 or (800) 363–8023, fax (450) 433–0272, or at *http://www.bellcustomer.com/files/.* Copies may be inspected at the FAA, Office of the Regional Counsel, Southwest Region, 2601 Meacham Blvd., Room 663, Fort Worth, Texas or at the National Archives and Records Administration (NARA). For information on the availability of this material at NARA, call 202–741–6030, or go to: *http://www.archives.gov/federal_register/code_of_federal_regulations/ibr_locations.html.*

(g) This amendment becomes effective on November 14, 2011, to all persons except those persons to whom it was made immediately effective by Emergency AD 2011–15–51, issued July 8, 2011, which contained the requirements of this amendment.

Note 2: The subject of this AD is addressed in Transport Canada AD CF–2011–17, dated June 30, 2011.

Issued in Fort Worth, Texas, on September 19, 2011.

Kim Smith,

Manager, Rotorcraft Directorate, Aircraft Certification Service.

[FR Doc. 2011–27687 Filed 10–26–11; 8:45 am]

BILLING CODE 4910–13–P

DEPARTMENT OF TRANSPORTATION

Federal Aviation Administration

14 CFR Part 39

[Docket No. FAA–2011–1074; Directorate Identifier 2010–SW–028–AD; Amendment 39–16834; AD 2011–21–11]

RIN 2120–AA64

Airworthiness Directives; Eurocopter France (Eurocopter) Model EC225LP Helicopters

AGENCY: Federal Aviation Administration, DOT.

ACTION: Final rule; request for comments.

SUMMARY: This amendment adopts a new airworthiness directive (AD) for the Eurocopter Model EC225LP helicopters. This AD requires inspecting the side mount of the pilot and copilot seats to determine if any floor attachment screw, nut, or washer is missing. If a screw, nut, or washer is missing, this AD also requires installing airworthy parts. This AD is prompted by a report that some of the floor attachment screws and nuts under the pilot and co-pilot seats were missing. Further investigation has shown that some of the cup washers that need to be used in installing countersunk head screws that attach the pilot and co-pilot seat frame to the floor were missing. A missing floor attachment screw, washer, or nut, if not detected, could reduce the strength of the seat attachment. The actions specified in this AD are intended to detect a missing floor attachment screw, washer, or nut and help prevent detachment of the seat from the floor during an emergency landing.

DATES: Effective November 14, 2011.

The incorporation by reference of certain publications listed in the regulations is approved by the Director of the Federal Register as of November 14, 2011.

Comments for inclusion in the Rules Docket must be received on or before December 27, 2011.

ADDRESSES: Use one of the following addresses to submit comments on this AD:

- *Federal eRulemaking Portal:* Go to *http://www.regulations.gov.* Follow the instructions for submitting comments.
- *Fax:* 202–493–2251.
- *Mail:* U.S. Department of Transportation, Docket Operations, M–30, West Building Ground Floor, Room W12–140, 1200 New Jersey Avenue, SE., Washington, DC 20590.
- *Hand Delivery:* U.S. Department of Transportation, Docket Operations, M–30, West Building Ground Floor, Room W12–140, 1200 New Jersey Avenue, SE., Washington, DC 20590, between 9 a.m. and 5 p.m., Monday through Friday, except Federal holidays.

You may get the service information identified in this AD from American Eurocopter Corporation, 2701 Forum Drive, Grand Prairie, TX 75053–4005, telephone (800) 232–0323, fax (972) 641–3710, or at *http://www.eurocopter.com.*

Examining te Docket: You may examine the docket that contains the AD, any comments, and other information on the Internet at *http://www.regulations.gov,* or in person at the Docket Operations office between 9 a.m. and 5 p.m., Monday through Friday, except Federal holidays. The Docket Operations office (telephone (800) 647 5527) is located in Room W12–140 on the ground floor of the West Building at the street address stated in the **ADDRESSES** section. Comments will be available in the AD docket shortly after receipt.

FOR FURTHER INFORMATION CONTACT: Gary Roach, Aviation Safety Engineer, FAA, Rotorcraft Directorate, Regulations and Guidance Group, 2601 Meacham Blvd., Fort Worth, Texas 76137, telephone (817) 222–5130, fax (817) 222–5961.

SUPPLEMENTARY INFORMATION:

Discussion

The European Aviation Safety Agency (EASA), which is the Technical Agent for the Member States of the European Union, has issued EASA AD No. 2010–

0030, dated February 26, 2010, to correct an unsafe condition for the Eurocopter Model EC225LP helicopters. EASA reports that on several newly-produced helicopters, some screws and nuts that attach the frames of the pilot's and co-pilot's seats to the floor were missing. Further investigation has shown that some of the cup washers that need to be used in installing the countersunk head screws, which attach the pilot's and co-pilot's seat frames to the floor, were missing. EASA states that this condition, if not corrected, reduces the seat attachments strength, and it could result in no longer retaining the seats in place in the event of an emergency or hard landing.

Differences Between This AD and the EASA AD

We refer to flight hours as hours time-in-service.

Related Service Information

Eurocopter has issued Alert Service Bulletin No. 53A020, Revision 0, dated February 17, 2010 (ASB), which specifies checking for the presence of screws and nuts on each side of the pilot's and co-pilot's seat mount. If one screw or one nut is missing, the ASB specifies removing the affected seat, checking for cup washers, and performing the specified corrective action to return the seat to conformity.

FAA's Evaluation and Unsafe Condition Determination

This helicopter has been approved by the aviation authority of France and is approved for operation in the United States. Pursuant to our bilateral agreement with France, EASA, their technical representative, has notified us of the unsafe condition described in the EASA AD. We are issuing this AD because we evaluated all information provided by EASA and determined the unsafe condition exists and is likely to exist or develop on other helicopters of this same type designs.

There are no helicopters of this type currently registered in the United States. However, this rule is necessary to ensure that the described unsafe condition is addressed if any of these helicopters are placed on the U.S. Registry in the future.

Costs of Compliance

There are no costs of compliance since there are no helicopters of this type design on the U.S. Registry.

FAA's Determination of the Effective Date

Since there are currently no affected U.S. registered helicopters, we have determined that notice and opportunity for prior public comment before issuing this AD are unnecessary and that good cause exists for making this amendment effective in less than 30 days.

Requirements of This AD

This unsafe condition is likely to exist or develop on other helicopters of the same type design that may become registered in the United States. Therefore, this AD is being issued to require, within 85 hours time-in-service (TIS), unless accomplished previously, inspecting for the presence of 4 screws and 4 nuts on each side of the copilot's seat mount and 1 screw and 1 nut on each side of the pilot's seat mount. If any screw, nut, or cup washer is missing, this AD requires removing the seat and mount and, before further flight, counter sinking the hole and installing airworthy parts and replacing the mount and seat. The actions must be done by following specified portions of the ASB described previously.

Comments Invited

This AD is a final rule that involves requirements affecting flight safety, and we did not precede it by notice and opportunity for public comment. We invite you to send any written relevant data, views, or arguments about this AD. Send your comments to an address listed under the **ADDRESSES**. Include "Docket No. FAA–2011–1074; Directorate Identifier 2010 SW 028 AD" at the beginning of your comments. We specifically invite comments on the overall regulatory, economic, environmental, and energy aspects of this AD. We will consider all comments received by the closing date and may amend this AD because of those comments.

We will post all comments we receive, without change, to *http://www.regulations.gov,* including any personal information you provide. We will also post a report summarizing each substantive verbal contact with FAA personnel concerning this AD. Using the search function of the docket web site, you can find and read the comments to any of our dockets, including the name of the individual who sent the comment. You may review the DOT's complete Privacy Act Statement in the **Federal Register** published on April 11, 2000 (65 FR 19477 78).

Regulatory Findings

We have determined that notice and prior public comment are unnecessary in promulgating this regulation; therefore, it can be issued immediately to correct an unsafe condition in aircraft since none of these model helicopters are registered in the United States. We have also determined that this regulation is not a "significant regulatory action" under Executive Order 12866. It has been determined further that this action involves an emergency regulation under DOT Regulatory Policies and Procedures (44 FR 11034, February 26, 1979). If it is determined that this emergency regulation otherwise would be significant under DOT Regulatory Policies and Procedures, a final regulatory evaluation will be prepared and placed in the AD docket.

Authority for This Rulemaking

Title 49 of the United States Code specifies the FAA's authority to issue rules on aviation safety. Subtitle I, Section 106, describes the authority of the FAA Administrator. Subtitle VII, Aviation Programs, describes in more detail the scope of the Agency's authority.

We are issuing this rulemaking under the authority described in Subtitle VII, Part A, Subpart III, Section 44701, "General requirements." Under that section, Congress charges the FAA with promoting safe flight of civil aircraft in air commerce by prescribing regulations for practices, methods, and procedures the Administrator finds necessary for safety in air commerce. This regulation is within the scope of that authority because it addresses an unsafe condition that is likely to exist or develop on products identified in this rulemaking action.

List of Subjects in 14 CFR Part 39

Air transportation, Aircraft, Aviation safety, Incorporation by reference, Safety.

Adoption of the Amendment

Accordingly, pursuant to the authority delegated to me by the Administrator, the Federal Aviation Administration amends part 39 of the Federal Aviation Regulations (14 CFR part 39) as follows:

PART 39—AIRWORTHINESS DIRECTIVES

■ 1. The authority citation for part 39 continues to read as follows:

Authority: 49 U.S.C. 106(g), 40113, 44701.

§ 39.13 [Amended]

■ 2. Section 39.13 is amended by adding a new airworthiness directive (AD) to read as follows:

2011–21–11 Eurocopter France: Amendment 39–16834; Docket No. FAA–2011–1074; Directorate Identifier 2010–SW–028–AD.

Applicability: Model EC225LP helicopters, with an airworthiness certificate issued before December 15, 2009, with FISHER H140 pilot and co-pilot seats, part number (P/N) 052010032000D61091, Eurocopter P/N 704A41120116, or with Eurocopter co-pilot seat, P/N 332V08–0180–00, installed, certificated in any category.

Compliance: Required as indicated, unless accomplished previously.

To detect a missing floor attachment screw, nut, or washer to help prevent detachment of the seat from the floor during an emergency landing, do the following:

(a) Within 85 hours time-in-service (TIS), inspect for the presence of 4 screws and 4 nuts on each side of the copilot's seat mount and 1 screw and 1 nut on each side of the pilot's seat mount by reference to Figures 1 through 4 of Eurocopter Alert Service Bulletin No. 53A020, Revision 0, dated February 17, 2010 (ASB).

(b) If any screw, nut, or cup washer is missing, remove the seat and mount and before further flight, countersink the hole and install airworthy parts and replace the mount and seat by following the Accomplishment Instructions, paragraph 2.b.2.b., of the ASB.

(c) To request a different method of compliance or a different compliance time for this AD, follow the procedures in 14 CFR 39.19. Contact the Manager, Safety Management Group, FAA, *Attn:* Gary Roach, Aviation Safety Engineer, Rotorcraft Directorate, Regulations and Guidance Group, 2601 Meacham Blvd., Fort Worth, Texas 76137, telephone (817) 222–5130, fax (817) 222–5961, for information about previously approved alternative methods of compliance.

(d) The Joint Aircraft System/Component Code is 2500: Cabin Equipment/Furnishings.

(e) The inspection and repair of the pilot and co-pilot seats shall be done by following the specified portions of Eurocopter Alert Service Bulletin No. 53A020, Revision 0, dated February 17, 2010. The Director of the Federal Register approved this incorporation by reference in accordance with 5 U.S.C. 552(a) and 1 CFR part 51. Copies may be obtained from American Eurocopter Corporation, 2701 Forum Drive, Grand Prairie, TX 75053–4005, telephone (800) 232–0323, fax (972) 641–3710, or at *http://www.eurocopter.com.* Copies may be inspected at the FAA, Office of the Regional Counsel, Southwest Region, 2601 Meacham Blvd., Room 663, Fort Worth, Texas, or at the National Archives and Records Administration (NARA). For information on the availability of this material at NARA, call 202–741–6030, or go to: *http://www.archives.gov/federal_register/code_of_federal_regulations/ibr_locations.html.*

(f) This amendment becomes effective on November 14, 2011.

Note: The subject of this AD is addressed in European Aviation Safety Agency AD No. 2010–0030, dated February 26, 2010.

Issued in Fort Worth, Texas, on September 29, 2011.

Kim Smith,

Manager, Rotorcraft Directorate, Aircraft Certification Service.

[FR Doc. 2011–27680 Filed 10–26–11; 8:45 am]

BILLING CODE 4910–13–P

DEPARTMENT OF TRANSPORTATION

Federal Aviation Administration

14 CFR Part 39

[Docket No. FAA–2011–0792; Directorate Identifier 2009–SW–19–AD; Amendment 39–16762; AD 2011–16–04]

RIN 2120–AA64

Airworthiness Directives; Sikorsky Aircraft Corporation (Sikorsky) Model S–92A Helicopters

AGENCY: Federal Aviation Administration, DOT.

ACTION: Final rule; request for comments.

SUMMARY: This amendment adopts a new airworthiness directive (AD) for Sikorsky Model S–92A helicopters. This action requires making pen and ink changes, inserting a copy of this AD, or inserting specified temporary revisions into the Limitations section of the Rotorcraft Flight Manual (RFM) limiting the maximum rolling groundspeed for a normal landing or takeoff from 65 knots to 50 knots for helicopters with a certain serial-numbered landing gear retract actuator (actuator). Instead of limiting the groundspeed, replacing the affected actuator with a modified actuator is terminating action for the requirements of this AD. This amendment is prompted by a report of a main landing gear that would not retract. The manufacturer reports that certain actuators were manufactured with down-lock keys that did not meet the specified minimum hardness requirements. This condition, if not corrected, could lead to a landing gear collapse following a roll-on landing that exceeds 50 knots groundspeed. These actions are intended to prevent collapse of a landing gear and subsequent loss of control of the helicopter.

DATES: Effective November 14, 2011.

Comments for inclusion in the Rules Docket must be received on or before December 27, 2011.

ADDRESSES: Use one of the following addresses to submit comments on this AD:

- *Federal eRulemaking Portal:* Go to *http://www.regulations.gov.* Follow the instructions for submitting comments.
- *Fax:* 202–493–2251.
- *Mail:* U.S. Department of Transportation, Docket Operations, M–30, West Building Ground Floor, Room W12–140, 1200 New Jersey Avenue, SE., Washington, DC 20590.
- *Hand Delivery:* U.S. Department of Transportation, Docket Operations, M–30, West Building Ground Floor, Room W12–140, 1200 New Jersey Avenue, SE., Washington, DC 20590, between 9 a.m. and 5 p.m., Monday through Friday, except Federal holidays.

You may get the service information identified in this AD from Sikorsky Aircraft Corporation, *Attn:* Manager, Commercial Technical Support, mailstop s581a, 6900 Main Street, Stratford, CT, telephone (203) 383–4866, e-mail address *tsslibrary@sikorsky.com*, or at *http://www.sikorsky.com.*

Examining the Docket: You may examine the docket that contains the AD, any comments, and other information on the Internet at *http://www.regulations.gov,* or in person at the Docket Operations office between 9 a.m. and 5 p.m., Monday through Friday, except Federal holidays. The Docket Operations office (telephone (800) 647–5527) is located in Room W12–140 on the ground floor of the West Building at the street address stated in the **ADDRESSES** section. Comments will be available in the AD docket shortly after receipt.

FOR FURTHER INFORMATION CONTACT: Michael Schwetz, Aviation Safety Engineer, Boston Aircraft Certification Office, 12 New England Executive Park, Burlington, MA 01803, telephone (781) 238–7761, fax (781) 238–7170.

SUPPLEMENTARY INFORMATION: This amendment adopts a new AD for Sikorsky Model S–92A helicopters. This action requires making pen and ink changes, inserting a copy of this AD, or inserting certain temporary revisions into the Limitations section of the RFM limiting the maximum groundspeed for a normal landing or takeoff to 50 knots for helicopters with a certain serial-numbered actuator installed. The temporary revisions to the Limitations section of the RFM also require replacing the actuators if the landing exceeds the 50 knot rolling groundspeed before further flight or before towing the helicopter; rolling ground taxi operations are permitted. Replacing the affected actuator with a modified actuator is terminating action for the requirements of this AD. The manufacturer states that it anticipates retrofitting the fleet with a modified actuator within 3 years. This amendment is prompted by a report that certain actuators were manufactured

with a down-lock pin that does not meet the specified minimum hardness requirements, which could lead to a landing gear collapse following a roll-on landing that exceeds 50 knots. These actions are intended to prevent a landing gear collapse and subsequent loss of control of the helicopter.

We have reviewed Sikorsky Alert Service Bulletin No. 92–32–001, dated May 2, 2008 (ASB), which describes the unsafe condition, its cause, and the temporary operating restrictions intended to mitigate the unsafe condition until modified actuators are available. The ASB references and includes Embraer Liebherr Eqiupamentos do Brasil Service Bulletin No. 2392–0850–32–02 Change No. 1, dated May 15, 2008, which specifies procedures for replacing the down-lock key in the affected actuators.

This unsafe condition is likely to exist or develop on other helicopters of the same type design. Therefore, this AD is being issued to limit the maximum rolling groundspeed for a normal landing or takeoff to 50 knots rolling groundspeed. If the limitation is exceeded on landing, the actuator must be replaced with a modified actuator before further flight or towing operation; rolling ground taxi operations are permitted. This AD requires making pen and ink changes, inserting a copy of this AD, or inserting the following temporary revisions into the Limitations section of the RFM: SA S92A–RFM–000, Revision 2; SA S92A–RFM–002, Revision 6; SA S92A–RFM–003, Revision 5; SA S92A–RFM–004, Revision 5; SA S92A–RFM–005, Revision 4; or SA S92A–RFM–006, Revision 3; all approved on January 7, 2011. Instead of limiting the groundspeed, replacing each actuator without the modification letter ''B'' stamped on the nameplate with an airworthy modified actuator with a letter ''B'' stamped on the nameplate constitutes terminating action for the requirements of this AD.

The short compliance time of before further flight is required because the previously described critical unsafe condition can adversely affect the structural integrity and controllability of the helicopter. Therefore, limiting the maximum groundspeed for normal landing or takeoff to 50 knots to reduce the likelihood of a landing gear collapse is required before further flight and this AD must be issued immediately.

Since a situation exists that requires the immediate adoption of this regulation, it is found that notice and opportunity for prior public comment hereon are impracticable and that good cause exists for making this amendment effective in less than 30 days.

We estimate that this AD will affect 42 helicopters. It will take a minimal amount of time to make the limitation changes. If the operator replaces an affected actuator with a modified actuator, it will take about 8 work hours at an average labor rate of $85 per work hour. Required parts will cost about $7,841 per helicopter. Based on these figures, we estimate the total cost impact of the AD on U.S. operators to be $357,882, assuming all the helicopter operators install modified actuators.

Comments Invited

This AD is a final rule that involves requirements that affect flight safety and was not preceded by notice and an opportunity for public comment; however, we invite you to submit any written data, views, or arguments regarding this AD. Send your comments to an address listed under **ADDRESSES**. Include ''Docket No. FAA–2011–0792; Directorate Identifier 2009–SW–19–AD'' at the beginning of your comments. We specifically invite comments on the overall regulatory, economic, environmental, and energy aspects of the AD. We will consider all comments received by the closing date and may amend the AD in light of those comments.

We will post all comments we receive, without change, to *http://www.regulations.gov,* including any personal information you provide. We will also post a report summarizing each substantive verbal contact with FAA personnel concerning this AD. Using the search function of our docket Web site, you can find and read the comments to any of our dockets, including the name of the individual who sent the comment. You may review the DOT's complete Privacy Act Statement in the **Federal Register** published on April 11, 2000 (65 FR 19477–78).

Regulatory Findings

We have determined that this AD will not have federalism implications under Executive Order 13132. This AD will not have a substantial direct effect on the States, on the relationship between the national Government and the States, or on the distribution of power and responsibilities among the various levels of government.

For the reasons discussed above, I certify that the regulation:

1. Is not a ''significant regulatory action'' under Executive Order 12866;

2. Is not a ''significant rule'' under the DOT Regulatory Policies and Procedures (44 FR 11034, February 26, 1979); and

3. Will not have a significant economic impact, positive or negative, on a substantial number of small entities under the criteria of the Regulatory Flexibility Act.

We prepared an economic evaluation of the estimated costs to comply with this AD. See the AD docket to examine the economic evaluation.

Authority for This Rulemaking

Title 49 of the United States Code specifies the FAA's authority to issue rules on aviation safety. Subtitle I, Section 106, describes the authority of the FAA Administrator. Subtitle VII, Aviation Programs, describes in more detail the scope of the Agency's authority.

We are issuing this rulemaking under the authority described in Subtitle VII, Part A, Subpart III, Section 44701, ''General requirements.'' Under that section, Congress charges the FAA with promoting safe flight of civil aircraft in air commerce by prescribing regulations for practices, methods, and procedures the Administrator finds necessary for safety in air commerce. This regulation is within the scope of that authority because it addresses an unsafe condition that is likely to exist or develop on products identified in this rulemaking action.

List of Subjects in 14 CFR Part 39

Air transportation, Aircraft, Aviation safety, Incorporation by reference, Safety.

Adoption of the Amendment

Accordingly, pursuant to the authority delegated to me by the Administrator, the Federal Aviation Administration amends part 39 of the Federal Aviation Regulations (14 CFR part 39) as follows:

PART 39—AIRWORTHINESS DIRECTIVES

■ 1. The authority citation for part 39 continues to read as follows:

Authority: 49 U.S.C. 106(g), 40113, 44701.

§ 39.13 [Amended]

■ 2. Section 39.13 is amended by adding a new airworthiness directive to read as follows:

2011–16–04 Sikorsky Aircraft Corporation: Amendment 39–16762. Docket No. FAA–2011–0792; Directorate Identifier 2009–SW–19–AD.

Applicability: Model S–92A helicopters with landing gear retract actuator (actuator), part number (P/N) 92250–00800–103, with a serial number (S/N) 101–00026 through 101–00237, without the modification letter ''B''

stamped on the nameplate, certificated in any category.

Compliance: Before further flight, unless previously accomplished.

To prevent a landing gear collapse and subsequent loss of control of the helicopter, do the following:

(a) Revise the operating limitations, ''Airspeed Limits'' section of the rotorcraft Flight Manual (RFM) by one of the following methods:

(1) Insert Sikorsky ''Temporary Revisions'' SA S92A–RFM–000, Revision 2; SA S92A–RFM–002, Revision 6; SA S92A–RFM–003, Revision 5; SA S92A–RFM–004, Revision 5; SA S92A–RFM–005, Revision 4; or SA S92A–RFM–006, Revision 3; all approved January 7, 2011; or

(2) Insert a copy of this AD; or

(3) Make pen and ink changes with the following limitations:

''Maximum rolling groundspeed for normal takeoff or normal landing is 50 knots.''

''After a landing with a rolling groundspeed in excess of 50 knots, any further takeoffs or towing operation is prohibited. Rolling ground taxi operations of less than 50 knots are permitted.''

(b) Following a landing with a rolling groundspeed in excess of 50 knots, or as an alternative to revising the operating limitations section of the RFM in compliance with this AD, before further flight, replace each affected actuator that does not have the modification letter ''B'' stamped on the nameplate with an airworthy actuator that has the modification letter ''B'' stamped on the nameplate.

(c) To request a different method of compliance or a different compliance time for this AD, follow the procedures in 14 CFR 39.19. Contact the Manager, Boston Aircraft Certification Office, FAA, ATTN: Michael Schwetz, Aviation Safety Engineer, 12 New England Executive Park, Burlington, MA 01803, telephone (781) 238–7761, fax (781) 238–7170, for information about previously approved alternative methods of compliance.

Note: Sikorsky Alert Service Bulletin No. 92–32–001, dated May 2, 2008, which is not incorporated by reference, contains additional information about the subject of this AD.

(d) The Joint Aircraft System/Component (JASC) Code is 3233: Landing Gear Actuator.

(e) This amendment becomes effective on November 14, 2011.

Issued in Fort Worth, Texas, on July 14, 2011.

Kim Smith,

Manager, Rotorcraft Directorate, Aircraft Certification Service.

[FR Doc. 2011–27773 Filed 10–26–11; 8:45 am]

BILLING CODE 4910–13–P

DEPARTMENT OF TRANSPORTATION

Federal Aviation Administration

14 CFR Part 39

[Docket No. FAA–2010–0909; Directorate Identifier 2010–SW–026–AD; Amendment 39–16835; AD 2011–21–12]

RIN 2120–AA64

Airworthiness Directives; Erickson Air-Crane Incorporated Model S–64F Helicopters

AGENCY: Federal Aviation Administration (FAA), DOT.

ACTION: Final rule.

SUMMARY: We are adopting a new airworthiness directive (AD) for the Erickson Air-Crane (Erickson Air-Crane) Model S–64F helicopters. The amendment requires, at specified intervals, certain inspections of the rotating swashplate assembly (swashplate) for a crack. If a crack is found, this AD also requires, before further flight, replacing the swashplate with an airworthy swashplate. This AD is prompted by a report from the manufacturer of a swashplate cracking during fatigue testing. We are issuing this AD to prevent loss of a swashplate due to a fatigue crack, loss of control of the main rotor system, and subsequent loss of control of the helicopter.

DATES: Effective December 1, 2011.

The Director of the Federal Register approved the incorporation by reference of certain publications listed in the AD as of December 1, 2011.

ADDRESSES: For service information identified in this AD, contact Erickson Air-Crane Incorporated, 3100 Willow Springs Road, P.O. Box 3247, Central Point, OR 97502, telephone (541) 664–5544, fax (541) 664–2312.

Examining the AD Docket: You may examine the AD docket, any comments, and other information in person at the Docket Operations office between 9 a.m. and 5 p.m., Monday through Friday, except Federal holidays. The Docket Operations office (telephone (800) 647–5527) is located in Room W12–140 on the ground floor of the West Building at 1200 New Jersey Avenue, SE., Washington, DC 20590.

FOR FURTHER INFORMATION CONTACT: Michael Kohner, ASW–170, Aviation Safety Engineer, Rotorcraft Directorate, Rotorcraft Certification Office, Fort Worth, Texas 76137, telephone (817) 222–5170, fax (817) 222–5783.

SUPPLEMENTARY INFORMATION:

Discussion

We issued a Notice of Proposed Rulemaking (NPRM) to amend 14 CFR part 39 to include an AD that would apply to Erickson Air-Crane Model S–64F helicopters on September 3, 2010. That NPRM was published in the **Federal Register** on September 16, 2010 (75 FR 56487). That NPRM proposed to require, at specified intervals, certain visual inspections of the swashplate for a crack. Also, the AD proposed, at specified intervals a fluorescent-penetrant inspection (FPI) of the swashplate for a crack. If a crack is found, that NPRM proposed, before further flight, replacing the swashplate with an airworthy swashplate.

Comments

We gave the public an opportunity to participate in developing this AD. We received no comment on the NPRM or on our determination of the cost to the public. Therefore, based on our review and evaluation of the available data, we have determined that air safety and the public interest require adopting the AD as proposed.

Costs of Compliance

We estimate that this AD will affect 7 helicopters of U.S. registry and will take about:

- .5 hour for the visual inspection;
- 1 hour for the 10-power or higher magnifying glass inspection;
- 35 hours for the 1,000-hour FPI; and
- 32 hours to replace a swashplate at

an average labor rate of $85 per work hour.

Required parts will cost about $25,000 per helicopter. Based on these figures, we estimate the cost of this AD on U.S. operators is $229,145, assuming 40 15-hour visual inspections; 4 150-hour 10-power magnifying glass inspections; 1 1000-hour FPI and 1 swashplate replacement for each helicopter for the entire fleet of S–64F helicopters for each year.

Authority for This Rulemaking

Title 49 of the United States Code specifies the FAA's authority to issue rules on aviation safety. Subtitle I, Section 106, describes the authority of the FAA Administrator. Subtitle VII, Aviation Programs, describes in more detail the scope of the Agency's authority.

We are issuing this rulemaking under the authority described in Subtitle VII, Part A, Subpart III, Section 44701, ''General requirements.'' Under that section, Congress charges the FAA with promoting safe flight of civil aircraft in air commerce by prescribing regulations for practices, methods, and procedures

the Administrator finds necessary for safety in air commerce. This regulation is within the scope of that authority because it addresses an unsafe condition that is likely to exist or develop on products identified in this rulemaking action.

Regulatory Findings

We have determined that this AD will not have federalism implications under Executive Order 13132. This AD will not have a substantial direct effect on the States, on the relationship between the national Government and the States, or on the distribution of power and responsibilities among the various levels of government.

For the reasons discussed above, I certify that the regulation:

1. Is not a ''significant regulatory action'' under Executive Order 12866;

2. Is not a ''significant rule'' under the DOT Regulatory Policies and Procedures (44 FR 11034, February 26, 1979); and

3. Will not have a significant economic impact, positive or negative, on a substantial number of small entities under the criteria of the Regulatory Flexibility Act.

List of Subjects in 14 CFR Part 39

Air transportation, Aircraft, Aviation safety, Incorporation by reference, Safety.

Adoption of the Amendment

Accordingly, pursuant to the authority delegated to me by the Administrator, the Federal Aviation Administration amends part 39 of the Federal Aviation Regulations (14 CFR part 39) as follows:

PART 39—AIRWORTHINESS DIRECTIVES

■ 1. The authority citation for part 39 continues to read as follows:

Authority: 49 U.S.C. 106(g), 40113, 44701.

§ 39.13 [Amended]

■ 2. The FAA amends § 39.13 by adding the following new airworthiness directive (AD):

2011–21–12 Erickson Air-Crane Incorporated: Amendment 39–16835; Docket No. FAA–2010–0909; Directorate Identifier 2010–SW–026–AD.

Applicability: Model S–64F helicopters, with rotating swashplate assembly (swashplate), part number (P/N) 65104–11001–051, installed, certificated in any category.

Compliance: Required as indicated.

To prevent loss of a swashplate due to a fatigue crack, loss of control of the main rotor system, and subsequent loss of control of the helicopter, do the following:

(a) Within 15 hours time-in-service (TIS), unless accomplished previously, and thereafter at intervals not to exceed 15 hours TIS, clean and visually inspect the swashplate for a crack in areas A through F as depicted in Figure 1 of Erickson Air-Crane Service Bulletin 64B10–10, Revision 2, dated April 1, 2008 (SB).

(b) Within 150 hours TIS, unless accomplished previously, and thereafter at intervals not to exceed 150 hours TIS, clean the swashplate and, using a 10-power or higher magnifying glass, visually inspect for a crack in areas A through F as depicted in Figure 1 of the SB.

(c) Within 1,000 hours TIS since the last fluorescent-penetrant inspection (FPI) and thereafter at intervals not to exceed 1,000 hours TIS, remove the swashplate from the rotor head, disassemble and remove the paint from the swashplate, and FPI the swashplate for a crack in accordance with ATSM E1417, Type I, Methods A or C.

(d) If a crack is found in the swashplate, before further flight, replace the swashplate with an airworthy swashplate.

(e) To request a different method of compliance or a different compliance time for this AD, follow the procedures in 14 CFR 39.19. Contact the Manager, Rotorcraft Certification Office, Rotorcraft Directorate, ATTN: DOT/FAA Southwest Region, Michael Kohner, ASW–170, Aviation Safety Engineer, Fort Worth, Texas 76137, telephone (817) 222–5170, fax (817) 222–5783, for information about previously approved alternative methods of compliance.

(f) The Joint Aircraft System/Component (JASC) Code is 6230: Main Rotor Mast/Swashplate.

(g) The inspections shall be done in accordance with the specified portions of Erickson Air-Crane Service Bulletin 64B10–10, Revision 2, dated April 1, 2008. The Director of the Federal Register approved this incorporation by reference in accordance with 5 U.S.C. 552(a) and 1 CFR part 51. Copies may be obtained from Erickson Air-Crane Incorporated, 3100 Willow Springs Road, P. O. Box 3247, Central Point, OR 97502, telephone (541) 664–5544, fax (541) 664–2312. Copies may be inspected at the FAA, Office of the Regional Counsel, Southwest Region, 2601 Meacham Blvd., Room 663, Fort Worth, Texas, or at the National Archives and Records Administration (NARA). For information on the availability of this material at NARA, call 202–741–6030, or go to: *http://www.archives.gov/federal_register/code_of_federal_regulations/ibr_locations.html.*

(h) This amendment becomes effective on December 1, 2011.

Issued in Fort Worth, Texas, on September 29, 2011.

Kim Smith,

Manager, Rotorcraft Directorate, Aircraft Certification Service.

[FR Doc. 2011–27775 Filed 10–26–11; 8:45 am]

BILLING CODE 4910–13–P

DEPARTMENT OF TRANSPORTATION

Federal Aviation Administration

14 CFR Part 39

[Docket No. FAA–2011–1033; Directorate Identifier 2009–SW–43–AD; Amendment 39–16815; AD 2011–20–05]

RIN 2120–AA64

Airworthiness Directives; Eurocopter France (Eurocopter) Model EC225LP Helicopters

AGENCY: Federal Aviation Administration, DOT.

ACTION: Final rule; request for comments.

SUMMARY: This amendment adopts a new airworthiness directive (AD) for the Eurocopter Model EC225LP helicopters. This AD requires inspecting the dome fairing support for a crack at the dome fairing attachment point. If a crack is found, this AD requires replacing the dome fairing support and the associated coning stop support assembly before further flight. If no crack is found, this AD requires repetitive inspections and retorquing the screws at specified intervals. This AD is prompted by the discovery of two fatigue cracks in the dome fairing attachment on the dome fairing support. This condition, if not corrected, could lead to the loss of the dome fairing in flight, causing damage to the helicopter and injury to people on the ground.

DATES: Effective November 14, 2011.

Comments for inclusion in the Rules Docket must be received on or before December 27, 2011.

ADDRESSES: Use one of the following addresses to submit comments on this AD:

- *Federal eRulemaking Portal:* Go to *http://www.regulations.gov.* Follow the instructions for submitting comments.
- *Fax:* 202–493–2251.
- *Mail:* U.S. Department of Transportation, Docket Operations, M–30, West Building Ground Floor, Room W12–140, 1200 New Jersey Avenue, SE., Washington, DC 20590.
- *Hand Delivery:* U.S. Department of Transportation, Docket Operations, M–30, West Building Ground Floor, Room W12–140, 1200 New Jersey Avenue, SE., Washington, DC 20590, between 9 a.m. and 5 p.m., Monday through Friday, except Federal holidays.

You may get the service information identified in this AD from American Eurocopter Corporation, 2701 Forum Drive, Grand Prairie, TX 75053–4005, telephone (800) 232–0323, fax (972) 641–3710, or at *http://www.eurocopter.com.*

Examining the Docket:

You may examine the docket that contains the AD, any comments, and other information on the Internet at *http://www.regulations.gov,* or in person at the Docket Operations office between 9 a.m. and 5 p.m., Monday through Friday, except Federal holidays. The Docket Operations office (telephone (800) 647–5527) is located in Room W12–140 on the ground floor of the West Building at the street address stated in the **ADDRESSES** section. Comments will be available in the AD docket shortly after receipt.

FOR FURTHER INFORMATION CONTACT: Gary Roach, Aviation Safety Engineer, FAA, Regulations and Policy Group, 2601 Meacham Blvd., Fort Worth, Texas 76137; *telephone:* (817) 222–5130; *fax:* 817–222–5961.

SUPPLEMENTARY INFORMATION:

Discussion

The European Aviation Safety Agency (EASA), which is the Technical Agent for the Member States of the European Union, has issued EASA AD 2009–0023, dated February 20, 2009, to correct an unsafe condition for the Eurocopter Model EC225LP helicopters. EASA advises that two fatigue cracks were discovered in the dome fairing attachment on the dome fairing support due to the loss of the tightening torque of the screws which secure the assembly. Since then, Eurocopter has developed a modification (MOD) which includes installation of redesigned parts with ''modified geometrics'' in the main rotor hub area.

Related Service Information

Eurocopter has issued Emergency Alert Service Bulletin No. 05A005, Revision 1, dated February 3, 2009 (EASB 05A005), which applies to FAA type-certificated Model EC225LP helicopters and non-FAA type certificated Model EC725AP military helicopters. Eurocopter also issued Service Bulletin No. 62–007, Revision 1, dated July 10, 2009, which applies to FAA type-certificated Model EC225LP helicopters, and specifies reinforcing the cone restrainer support, MOD 0743718. EASB 05A005 specifies checking the dome fairing support for a crack and readjusting the tightening torque of the dome fairing-to-dome fairing support attachment screws. If a crack is found, the EASB specifies complying with MOD 0743718 before resuming flight. Eurocopter states that installing this MOD exempts the operator from the monitoring requirements. They also state that this MOD reinforces the coning stop support and improves the dome fairing support attachment on the coning stop support. The EASA classified this service information as mandatory and issued EASA AD No. 2009–0023, dated February 20, 2009, to ensure the continued airworthiness of these helicopters.

FAA's Evaluation and Unsafe Condition Determination

This helicopter model has been approved by the aviation authority of France and is approved for operation in the United States. Pursuant to our bilateral agreement with France, EASA, their technical representative, has notified us of the unsafe condition described in the EASA AD. We are issuing this AD because we evaluated all information provided by EASA and determined an unsafe condition exists and is likely to exist or develop on other helicopters of the same type design.

There are no products of this type currently registered in the United States. However, this rule is necessary to ensure that the described unsafe condition is addressed if any of these products are placed on the U.S. Registry in the future.

Differences Between This AD and the EASA AD

This AD differs from the EASA AD in that we:

- Use ''hours time-in-service'' rather than ''flight hours.''
- Do not impose a calendar date compliance time.
- Use the term ''inspect'' rather than ''check.''

Costs of Compliance

There are no costs of compliance since there are no helicopters of this type design on the U.S. Registry.

FAA's Determination of the Effective Date

Since there are currently no affected U.S. registered helicopters, we have determined that notice and opportunity for prior public comment before issuing this AD are unnecessary and that good cause exists for making this amendment effective in less than 30 days.

Requirements of This AD

This unsafe condition is likely to exist or develop on other helicopters of the same type design registered in the United States. Therefore, this AD is being issued to prevent loss of the dome fairing in flight, causing damage to the helicopter and injury to people on the ground. This AD requires inspecting for a crack in the dome fairing support at the dome fairing attachment points. If a crack is found, this AD requires replacing the dome fairing support and the associated coning stop support assembly before further flight. If no crack is found, this AD requires repetitive inspections and retorquing the screws securing the dome fairing support to the dome fairing at specified intervals. This AD is prompted by the discovery of two fatigue cracks in the dome fairing attachment on the dome fairing support. Accomplishing Eurocopter MOD 0743718 constitutes terminating action for the requirements of this AD.

Comments Invited

This AD is a final rule that involves requirements affecting flight safety, and we did not precede it by notice and opportunity for public comment. We invite you to send any written relevant data, views, or arguments about this AD. Send your comments to an address listed under the **ADDRESSES**. Include ''Docket No. FAA–2011–1033; Directorate Identifier 2009–SW–43–AD'' at the beginning of your comments. We specifically invite comments on the overall regulatory, economic, environmental, and energy aspects of this AD. We will consider all comments received by the closing date and may amend this AD because of those comments.

We will post all comments we receive, without change, to *http://www.regulations.gov*, including any personal information you provide. We will also post a report summarizing each substantive verbal contact with FAA personnel concerning this AD. Using the search function of the docket web site, you can find and read the comments to any of our dockets, including the name of the individual who sent the comment. You may review the DOT's complete Privacy Act Statement in the **Federal Register** published on April 11, 2000 (65 FR 19477–78).

Regulatory Findings

We have determined that notice and prior public comment are unnecessary in promulgating this regulation; therefore, it can be issued immediately to correct an unsafe condition in aircraft since none of these model helicopters are registered in the United States. We have also determined that this regulation is not a ''significant regulatory action'' under Executive Order 12866. It has been determined further that this action involves an emergency regulation under DOT Regulatory Policies and Procedures (44 FR 11034, February 26, 1979). If it is determined that this emergency regulation otherwise would be

significant under DOT Regulatory Policies and Procedures, a final regulatory evaluation will be prepared and placed in the AD docket.

Authority for This Rulemaking

Title 49 of the United States Code specifies the FAA's authority to issue rules on aviation safety. Subtitle I, Section 106, describes the authority of the FAA Administrator. Subtitle VII, Aviation Programs, describes in more detail the scope of the Agency's authority.

We are issuing this rulemaking under the authority described in Subtitle VII, Part A, Subpart III, Section 44701, ''General requirements.'' Under that section, Congress charges the FAA with promoting safe flight of civil aircraft in air commerce by prescribing regulations for practices, methods, and procedures the Administrator finds necessary for safety in air commerce. This regulation is within the scope of that authority because it addresses an unsafe condition that is likely to exist or develop on products identified in this rulemaking action.

List of Subjects in 14 CFR Part 39

Air transportation, Aircraft, Aviation safety, Incorporation by Reference, Safety.

Adoption of the Amendment

Accordingly, pursuant to the authority delegated to me by the Administrator, the Federal Aviation Administration amends part 39 of the Federal Aviation Regulations (14 CFR part 39) as follows:

PART 39—AIRWORTHINESS DIRECTIVES

■ 1. The authority citation for part 39 continues to read as follows:

Authority: 49 U.S.C. 106(g), 40113, 44701.

§ 39.13 [Amended]

■ 2. Section 39.13 is amended by adding a new airworthiness directive to read as follows:

2011–20–05 Eurocopter France (Eurocopter): Amendment 39–16815; Docket No. FAA–2011–1033; Directorate Identifier 2009–SW–43–AD.

Applicability: Model EC225LP helicopters, certificated in any category, that have not been modified in accordance with Eurocopter Modification (MOD) 0743718.

Compliance: Required as indicated.

To prevent loss of the dome fairing in flight, damage to the helicopter, and injury to people on the ground, accomplish the following:

(a) Within 15 hours time-in-service (TIS), unless accomplished previously, inspect for a crack in the dome fairing support at the dome fairing attachment points.

(1) If a crack is found in the dome fairing support or at a dome fairing attachment point, before further flight, replace the dome fairing support and the associated coning stop support assembly.

(2) If no crack is found, thereafter at intervals not exceeding 165 hours TIS, inspect for a crack in the dome fairing support, and re-torque the screws securing the dome fairing support to the dome fairing.

Note 1: Eurocopter Emergency Alert Service Bulletin No. 05A005, Revision 1, dated February 3, 2009, and Service Bulletin No. 62–007, Revision 1, dated July 10, 2009, which are not incorporated by reference, contain additional information about the subject of this AD.

(b) Accomplishing Eurocopter MOD 0743718 constitutes terminating action for the requirements of this AD.

(c) To request a different method of compliance or a different compliance time for this AD, follow the procedures in 14 CFR 39.19. Contact the Manager, Safety Management Group, FAA, *Attn:* Gary Roach, Aviation Safety Engineer, FAA, Regulations and Policy Group, 2601 Meacham Blvd., Fort Worth, Texas 76137; *telephone:* (817) 222–5130; *fax:* 817–222–5961, for information about previously approved alternative methods of compliance.

(d) A special flight permit will not be issued.

(e) The Joint Aircraft System/Component (JASC) Code is 6300: Main Rotor Drive System.

(f) This amendment becomes effective on November 14, 2011.

Note 2: The subject of this AD is addressed in European Aviation Safety Agency AD No. 2009–0023, dated February 20, 2009.

Issued in Fort Worth, Texas, on September 13, 2011.

Lance T. Gant,

Acting Manager, Rotorcraft Directorate, Aircraft Certification Service.

[FR Doc. 2011–27771 Filed 10–26–11; 8:45 am]

BILLING CODE 4910–13–P

DEPARTMENT OF TRANSPORTATION

Federal Aviation Administration

14 CFR Part 39

[Docket No. FAA–2011–1096; Directorate Identifier 2011–NM–185–AD; Amendment 39–16848; AD 2011–22–06]

RIN 2120–AA64

Airworthiness Directives; Bombardier, Inc. Model CL–215–1A10, CL–215–6B11 (CL–215T Variant), and CL–215–6B11 (CL–415 Variant) Airplanes

AGENCY: Federal Aviation Administration (FAA), Department of Transportation (DOT).

ACTION: Final rule; request for comments.

SUMMARY: We are adopting a new airworthiness directive (AD) for certain Bombardier, Inc. Model CL–215–1A10, CL–215–6B11 (CL–215T Variant), and CL–215–6B11 (CL–415 Variant) airplanes. This AD results from mandatory continuing airworthiness information (MCAI) originated by an aviation authority of another country to identify and correct an unsafe condition on an aviation product. The MCAI describes the unsafe condition as:

Multiple cracks were reported on the Main Landing Gear (MLG) upper member forward lug, part numbers 160–714–3 (L/H) and 160–714–4 (R/H). An investigation determined the cause to be fatigue cracks at the base of the step radius with multiple initiation sites. The fatigue cracking may compromise the structural integrity of the MLG during takeoff or landing, leading to failure.

* * * * *

This AD requires actions that are intended to address the unsafe condition described in the MCAI.

DATES: This AD becomes effective November 14, 2011.

The Director of the Federal Register approved the incorporation by reference of certain publications listed in the AD as of November 14, 2011.

We must receive comments on this AD by December 12, 2011.

ADDRESSES: You may send comments by any of the following methods:

- *Federal eRulemaking Portal:* Go to *http://www.regulations.gov.* Follow the instructions for submitting comments.
- *Fax:* (202) 493–2251.
- *Mail:* U.S. Department of Transportation, Docket Operations, M–30, West Building Ground Floor, Room W12–140, 1200 New Jersey Avenue, SE., Washington, DC 20590.
- *Hand Delivery:* U.S. Department of Transportation, Docket Operations, M–30, West Building Ground Floor, Room W12–140, 1200 New Jersey Avenue, SE., Washington, DC, between 9 a.m. and 5 p.m., Monday through Friday, except Federal holidays.

Examining the AD Docket

You may examine the AD docket on the Internet at *http://www.regulations.gov;* or in person at the Docket Operations office between 9 a.m. and 5 p.m., Monday through Friday, except Federal holidays. The AD docket contains this AD, the regulatory evaluation, any comments received, and other information. The street address for the Docket Operations office (telephone (800) 647–5527) is in the **ADDRESSES** section. Comments will be available in the AD docket shortly after receipt.

FOR FURTHER INFORMATION CONTACT: Aziz Ahmed, Aerospace Engineer, Airframe

and Mechanical Systems Branch, ANE–171, FAA, New York Aircraft Certification Office, 1600 Stewart Avenue, Suite 410, Westbury, New York 11590; telephone (516) 228–7329; fax (516) 794–5531.

SUPPLEMENTARY INFORMATION:

Discussion

Transport Canada Civil Aviation (TCCA), which is the aviation authority for Canada, has issued Canadian Airworthiness Directive CF–2011–35, dated August 29, 2011 (referred to after this as ''the MCAI''), to correct an unsafe condition for the specified products. The MCAI states:

> Multiple cracks were reported on the Main Landing Gear (MLG) upper member forward lug, part numbers 160–714–3 (L/H) and 160–714–4 (R/H). An investigation determined the cause to be fatigue cracks at the base of the step radius with multiple initiation sites. The fatigue cracking may compromise the structural integrity of the MLG during takeoff or landing, leading to failure.
>
> This [Canadian] directive mandates repetitive eddy current inspections and a one-time fluorescent penetrant inspection of the MLG upper member forward lugs to determine fleet condition. Pending fleet inspection results, further action may result to mitigate the risk of failure due to fatigue cracks.

The action includes inspecting for any cracks. The corrective action is replacing the forward lug of the MLG upper member with a new forward lug if any crack is found. You may obtain further information by examining the MCAI in the AD docket.

Relevant Service Information

Bombardier has issued Alert Service Bulletin 215–A548, dated July 15, 2011; Alert Service Bulletin 215–A4451, dated July 15, 2011; Alert Service Bulletin 215–A547, dated July 8, 2011; and Alert Service Bulletin 215–A4450, dated July 8, 2011. The actions described in this service information are intended to correct the unsafe condition identified in the MCAI.

FAA's Determination and Requirements of This AD

This product has been approved by the aviation authority of another country, and is approved for operation in the United States. Pursuant to our bilateral agreement with the State of Design Authority, we have been notified of the unsafe condition described in the MCAI and service information referenced above. We are issuing this AD because we evaluated all pertinent information and determined the unsafe condition exists and is likely to exist or develop on other products of the same type design.

Differences Between the AD and the MCAI or Service Information

We have reviewed the MCAI and related service information and, in general, agree with their substance. But we might have found it necessary to use different words from those in the MCAI to ensure the AD is clear for U.S. operators and is enforceable. In making these changes, we do not intend to differ substantively from the information provided in the MCAI and related service information.

We might also have required different actions in this AD from those in the MCAI in order to follow FAA policies. Any such differences are highlighted in a Note within the AD.

FAA's Determination of the Effective Date

An unsafe condition exists that requires the immediate adoption of this AD. The FAA has found that the risk to the flying public justifies waiving notice and comment prior to adoption of this rule because multiple cracks were reported on the forward lug of the upper member of the MLG. An investigation determined the cause to be fatigue cracking at the base of the step radium with multiple initiation sites. The fatigue cracking could adversely affect the structural integrity of the MLG during takeoff or landing. Therefore, we determined that notice and opportunity for public comment before issuing this AD are impracticable and that good cause exists for making this amendment effective in fewer than 30 days.

Comments Invited

This AD is a final rule that involves requirements affecting flight safety, and we did not precede it by notice and opportunity for public comment. We invite you to send any written relevant data, views, or arguments about this AD. Send your comments to an address listed under the **ADDRESSES** section. Include ''Docket No. FAA–2011–1096; Directorate Identifier 2011–NM–185–AD'' at the beginning of your comments. We specifically invite comments on the overall regulatory, economic, environmental, and energy aspects of this AD. We will consider all comments received by the closing date and may amend this AD because of those comments.

We will post all comments we receive, without change, to *http://www.regulations.gov*, including any personal information you provide. We will also post a report summarizing each substantive verbal contact we receive about this AD.

Authority for This Rulemaking

Title 49 of the United States Code specifies the FAA's authority to issue rules on aviation safety. Subtitle I, section 106, describes the authority of the FAA Administrator. ''Subtitle VII: Aviation Programs,'' describes in more detail the scope of the Agency's authority.

We are issuing this rulemaking under the authority described in ''Subtitle VII, Part A, Subpart III, Section 44701: General requirements.'' Under that section, Congress charges the FAA with promoting safe flight of civil aircraft in air commerce by prescribing regulations for practices, methods, and procedures the Administrator finds necessary for safety in air commerce. This regulation is within the scope of that authority because it addresses an unsafe condition that is likely to exist or develop on products identified in this rulemaking action.

Regulatory Findings

We determined that this AD will not have federalism implications under Executive Order 13132. This AD will not have a substantial direct effect on the States, on the relationship between the national government and the States, or on the distribution of power and responsibilities among the various levels of government.

For the reasons discussed above, I certify this AD:

1. Is not a ''significant regulatory action'' under Executive Order 12866;
2. Is not a ''significant rule'' under the DOT Regulatory Policies and Procedures (44 FR 11034, February 26, 1979); and
3. Will not have a significant economic impact, positive or negative, on a substantial number of small entities under the criteria of the Regulatory Flexibility Act.

We prepared a regulatory evaluation of the estimated costs to comply with this AD and placed it in the AD docket.

List of Subjects in 14 CFR Part 39

Air transportation, Aircraft, Aviation safety, Incorporation by reference, Safety.

Adoption of the Amendment

Accordingly, under the authority delegated to me by the Administrator, the FAA amends 14 CFR part 39 as follows:

PART 39—AIRWORTHINESS DIRECTIVES

■ 1. The authority citation for part 39 continues to read as follows:

Authority: 49 U.S.C. 106(g), 40113, 44701.

§ 39.13 [Amended]

■ 2. The FAA amends § 39.13 by adding the following new AD:

2011–22–06 Bombardier, Inc.: Amendment 39–16848. Docket No. FAA–2011–1096; Directorate Identifier 2011–NM–185–AD.

Effective Date

(a) This airworthiness directive (AD) becomes effective November 14, 2011.

Affected ADs

(b) None.

Applicability

(c) This AD applies to Bombardier, Inc., airplanes, certificated in any category, identified in paragraphs (c)(1), (c)(2), and (c)(3) of this AD.

(1) Model CL–215–1A10 airplanes, serial numbers 1051 through 1125 inclusive;

(2) Model CL–215–6B11 (CL–215T Variant) airplanes, serial numbers 1056 through 1125 inclusive; and

(3) Model CL–215–6B11 (CL–415 Variant) airplanes, serial numbers 2001 through 2990 inclusive.

Subject

(d) Air Transport Association (ATA) of America Code 32: Landing Gear.

Reason

(e) The mandatory continued airworthiness information (MCAI) states:

Multiple cracks were reported on the Main Landing Gear (MLG) upper member forward lug, part numbers 160–714–3 (L/H) and 160–714–4 (R/H). An investigation determined the cause to be fatigue cracks at the base of the step radius with multiple initiation sites. The fatigue cracking may compromise the structural integrity of the MLG during takeoff or landing, leading to failure.

* * * * *

Compliance

(f) You are responsible for having the actions required by this AD performed within the compliance times specified, unless the actions have already been done.

Eddy Current Inspections

(g) Within 50 flight hours after the effective date of this AD: Perform an in situ eddy current inspection for cracks on the forward lug of the MLG upper member, part numbers 160–714–3 (left hand) and 160–714–4 (right hand), in accordance with the Accomplishment Instructions of Bombardier Alert Service Bulletin 215–A548, dated July 15, 2011 (for Model CL–215–1A10 airplanes, and Model CL–215–6B11 (CL–215T Variant) airplanes); or Bombardier Alert Service Bulletin 215–A4451, dated July 15, 2011 (for Model CL–215–6B11 (CL–415 Variant) airplanes).

(1) If any crack is found: Before further flight, replace the forward lug of the MLG upper member with a new forward lug, in accordance with the Accomplishment Instructions of Bombardier Alert Service Bulletin 215–A548, dated July 15, 2011 (for Model CL–215–1A10 airplanes, and Model CL–215–6B11 (CL–215T Variant) airplanes); or Bombardier Alert Service Bulletin 215–A4451, dated July 15, 2011 (for Model CL–215–6B11 (CL–415 Variant) airplanes). Thereafter, repeat the in situ eddy current inspection at intervals not to exceed 165 land landings.

(2) If no crack is found: Repeat the in situ eddy current inspection at intervals not to exceed 165 land landings, in accordance with the Accomplishment Instructions of Bombardier Alert Service Bulletin 215–A548, dated July 15, 2011 (for Model CL–215–1A10 airplanes, and Model CL–215–6B11 (CL–215T Variant) airplanes); or Bombardier Alert Service Bulletin 215–A4451, dated July 15, 2011 (for Model CL–215–6B11 (CL–415 Variant) airplanes).

Fluorescent Penetrant Inspection

(h) Within two months after the effective date of this AD: Perform a one-time fluorescent penetrant inspection for cracks on the forward lug of the MLG upper member, part numbers 160–714–3 (left hand) and 160–714–4 (right hand), in accordance with the Accomplishment Instructions of Bombardier Alert Service Bulletin 215–A547, dated July 8, 2011 (for Model CL–215–1A10 airplanes, and Model CL–215–6B11 (CL–215T Variant) airplanes); or Bombardier Alert Service Bulletin 215–A4450, dated July 8, 2011 (for Model CL–215–6B11 (CL–415 Variant) airplanes). If any crack is found, before further flight, replace the forward lug of the MLG upper member with a new forward lug, in accordance with the Accomplishment Instructions of Bombardier Alert Service Bulletin 215–A547, dated July 8, 2011 (for Model CL–215–1A10 airplanes, and Model CL–215–6B11 (CL–215T Variant) airplanes); or Bombardier Alert Service Bulletin 215–A4450, dated July 8, 2011 (for Model CL–215–6B11 (CL–415 Variant) airplanes).

FAA AD Differences

Note 1: This AD differs from the MCAI and/or service information as follows:

If any cracking is found during any in situ eddy current inspection specified in paragraph (g) of this AD, and the forward lug of the MLG upper member is replaced, this AD requires repetitive in situ eddy current inspections, thereafter, at intervals not to exceed 165 land landings. Canadian Airworthiness Directive CF–2011–35, dated August 29, 2011, does not include this requirement.

Other FAA AD Provisions

(i) The following provisions also apply to this AD:

(1) *Alternative Methods of Compliance (AMOCs):* The Manager, New York Aircraft Certification Office (ACO), ANE–170, FAA, has the authority to approve AMOCs for this AD, if requested using the procedures found in 14 CFR 39.19. In accordance with 14 CFR 39.19, send your request to your principal inspector or local Flight Standards District Office, as appropriate. If sending information directly to the New York ACO, send it to *Attn:* Program Manager, Continuing Operational Safety, FAA, New York ACO, 1600 Stewart Avenue, Suite 410, Westbury, New York 11590; telephone 516–228–7300; fax 516–794–5531. Before using any approved AMOC, notify your appropriate principal inspector, or lacking a principal inspector, the manager of the local flight standards district office/certificate holding district office. The AMOC approval letter must specifically reference this AD.

(2) *Airworthy Product:* For any requirement in this AD to obtain corrective actions from a manufacturer or other source, use these actions if they are FAA-approved. Corrective actions are considered FAA-approved if they are approved by the State of Design Authority (or their delegated agent). You are required to assure the product is airworthy before it is returned to service.

(j) *Special Flight Permits:* Special flight permits, as described in Section 21.197 and Section 21.199 of the Federal Aviation Regulations (14 CFR 21.197 and 21.199), are not allowed.

Related Information

(k) Refer to MCAI Canadian Airworthiness Directive CF–2011–35, dated August 29 2011; Bombardier Alert Service Bulletin 215–A548, dated July 15, 2011; Bombardier Alert Service Bulletin 215–A4451, dated July 15, 2011; Bombardier Alert Service Bulletin 215–A547, dated July 8, 2011; and Bombardier Alert Service Bulletin 215–A4450, dated July 8, 2011; for related information.

Material Incorporated by Reference

(l) You must use Bombardier Alert Service Bulletin 215–A548, dated July 15, 2011; Bombardier Alert Service Bulletin 215–A4451, dated July 15, 2011; Bombardier Alert Service Bulletin 215–A547, dated July 8, 2011; and Bombardier Alert Service Bulletin 215–A4450, dated July 8, 2011; as applicable; to do the actions required by this AD, unless the AD specifies otherwise.

(1) The Director of the Federal Register approved the incorporation by reference of this service information under 5 U.S.C. 552(a) and 1 CFR part 51.

(2) For service information identified in this AD, contact Bombardier, Inc., 400 Côte-Vertu Road West, Dorval, Québec H4S 1Y9, Canada; telephone 514–855–5000; fax 514–855–7401; e-mail *thd.crj@aero.bombardier.com*; Internet *http://www.bombardier.com.*

(3) You may review copies of the service information at the FAA, Transport Airplane Directorate, 1601 Lind Avenue SW., Renton, Washington. For information on the availability of this material at the FAA, call 425–227–1221.

(4) You may also review copies of the service information that is incorporated by reference at the National Archives and Records Administration (NARA). For information on the availability of this material at NARA, call 202–741–6030, or go to: *http://www.archives.gov/federal_register/code_of_federal_regulations/ibr_locations.html.*

Issued in Renton, Washington, on October 13, 2011.

Ali Bahrami,

Manager, Transport Airplane Directorate, Aircraft Certification Service.

[FR Doc. 2011–27599 Filed 10–26–11; 8:45 am]

BILLING CODE 4910–13–P

DEPARTMENT OF TRANSPORTATION

Federal Aviation Administration

14 CFR Part 39

[Docket No. FAA–2011–1034; Directorate Identifier 2011–SW–014–AD; Amendment 39–16816; AD 2011–20–06]

RIN 2120–AA64

Airworthiness Directives; Agusta S.p.A. Model AB139 and AW139 Helicopters

AGENCY: Federal Aviation Administration, DOT.

ACTION: Final rule; request for comments.

SUMMARY: This amendment supersedes an existing airworthiness directive (AD) for Agusta S.p.A. (Agusta) Model AB139 and AW139 helicopters. This action retains the requirements in the existing AD and adds a daily check of the tailboom panels to detect bulging or deformation of the tailboom outer skin panels. If there is bulging or deformation, this AD requires a mechanic to do a tap inspection for debonding. If the debonded area exceeds a certain limit, this AD requires modifying the tailboom. Also, when an area of debond does not exceed the limits, this AD requires, before further flight, repairing the debonded area of the tailboom or replacing the tailboom. This action also adds a tap inspection for additional tailboom panels and requires the inspection on both sides of the tailboom. This amendment is prompted by the determination that more inspections are required and to limit the applicability only to those helicopters with tailboom assemblies that have not been modified. Modifying the tailboom assembly is terminating action for the requirements of this AD. The actions specified in this AD are intended to detect damage in the tailboom to prevent failure of a tailboom and subsequent loss of control of a helicopter.

DATES: Effective November 14, 2011.

The incorporation by reference of certain publications listed in the regulations is approved by the Director of the Federal Register as of November 14, 2011.

Comments for inclusion in the Rules Docket must be received on or before December 27, 2011.

ADDRESSES: Use one of the following addresses to submit comments on this AD:

- *Federal eRulemaking Portal:* Go to *http://www.regulations.gov.* Follow the instructions for submitting comments.
- *Fax:* 202–493–2251.
- *Mail:* U.S. Department of Transportation, Docket Operations, M–30, West Building Ground Floor, Room W12–140, 1200 New Jersey Avenue, SE., Washington, DC 20590.
- *Hand Delivery:* U.S. Department of Transportation, Docket Operations, M–30, West Building Ground Floor, Room W12–140, 1200 New Jersey Avenue, SE., Washington, DC 20590, between 9 a.m. and 5 p.m., Monday through Friday, except Federal holidays.

You may get the service information identified in this AD from Agusta, Via Giovanni Agusta, 520 21017 Cascina Costa di Samarate (VA), Italy, telephone 39 0331–229111, fax 39 0331–229605/222595, or at *http://customersupport.agusta.com/technical_advice.php.*

Examining the Docket: You may examine the docket that contains the AD, any comments, and other information on the Internet at *http://www.regulations.gov*, or in person at the Docket Operations office between 9 a.m. and 5 p.m., Monday through Friday, except Federal holidays. The Docket Operations office (telephone (800) 647–5527) is located in Room W12–140 on the ground floor of the West Building at the street address stated in the **ADDRESSES** section. Comments will be available in the AD docket shortly after receipt.

FOR FURTHER INFORMATION CONTACT: Sharon Miles, Aviation Safety Engineer, FAA, Rotorcraft Directorate, Regulations and Policy Group, 2601 Meacham Blvd., Fort Worth, Texas 76137, telephone (817) 222–5122, fax (817) 222–5961.

SUPPLEMENTARY INFORMATION: Based on the European Aviation Safety Agency (EASA) AD No. 2009–0198 E, dated September 16, 2009, we issued Emergency AD 2009–19–51, to all known U.S. owners and operators of Agusta Model AB139 and AW139 helicopters. We then issued a Final rule; request for comments for AD 2009–19–51, Amendment 39–16129, on January 11, 2010 (75 FR 3615, January 22, 2010). That AD requires inspecting the tailboom panels for debonding and if the debonding area exceeds a certain limit, repairing the tailboom. That action was prompted by a Model AW139 helicopter tailboom bending and collapsing during taxiing. That condition, if not corrected, could result in failure of a tailboom and subsequent loss of control of the helicopter.

Since issuing AD 2009–19–51, we have determined that additional inspections are needed on certain tailboom configurations. This determination was based on findings from the previous inspections required by AD 2009–19–51. Also, the manufacturer has introduced tailboom reinforcement structural retro modification (MOD), part number (P/N) 3G5309P01812, to reinforce the structure of the tailboom.

After reports of debonding of fuselage tailboom panels, EASA, which is the Technical Agent for the Member States of the European Union, issued the following ADs to correct an unsafe condition for the specified Agusta model helicopters:

- No. 2009–0234–E, dated October 28, 2009, introduced additional inspections of the tailboom panels.
- No. 2009–0234–E R1, dated October 29, 2009, added some serial numbers.
- No. 2011–0019, dated February 3, 2011, limits the applicability only to those helicopters with tailboom assemblies that have not been modified according to MOD, P/N 3G5309P01812, and requires modifying the tailboom assemblies with MOD, P/N 3G5309P01812, and to contact Agusta if there is an area of debond that exceeds the specified limits.

Related Service Information

Agusta has issued Alert Bollettino Tecnico (ABT) No. 139–195, Revision B, dated February 2, 2010, which supersedes ABT No. 139–193 and No. 139–194, both dated September 3, 2009. Based on findings from the inspections specified in ABT No. 139–193 and No. 139–194 on specific tailboom configurations, the revised ABT specifies a tighter inspection schedule and more frequent tapping inspections on two specific areas. The revised ABT retains the 50-flight hour tapping inspection specified by the superseded ABTs for inspecting the affected tailboom panels for signs of debonding and contacting the manufacturer for repair instructions. EASA classified the revised ABT as mandatory and issued AD No. 2009–0234–E, dated October 28, 2009, and subsequently 2009–0234–E R1, dated October 29, 2009, and 2011–0019 dated February 3, 2011, to ensure the continued airworthiness of these helicopters.

FAA's Evaluation and Unsafe Condition Determination

These helicopters have been approved by the aviation authority of Italy and are approved for operation in the United States. Pursuant to our bilateral agreement with Italy, EASA, their technical representative, has notified us of the unsafe condition described in AD 2011–0019. We are issuing this AD because we evaluated all information provided by EASA and determined the unsafe condition exists and is likely to

exist or develop on other helicopters of these same type designs.

Differences Between This AD and the EASA AD

We refer to flight hours as hours time-in-service (TIS). Also, we do not require you to contact the manufacturer. Finally, we require the inspection on both sides of the tailboom, and the EASA AD only requires the inspection on the right side of the tailboom. We do not require a specific part-numbered platform to do the inspections, and the EASA AD requires using Platform (CG–07–00), P/N 2004–5007–B or approved equivalent.

Comments

The comment period for AD 2009–19–51 closed on March 23, 2010. We have considered the two comments received from one commenter.

The commenter states that Agusta ABT No. 139–195, Revision A, dated October 27, 2009, supersedes ABT No. 139–193 and 139–194, and recommends referencing ABT 139–195 in the AD. The commenter also recommends relocating Note 1 because the current location in the AD can cause confusion.

We agree with the commenter, but ABT No. 139–195 has been revised to Revision B. Therefore, we reference ABT 139–195, Revision B, dated February 2, 2010, in this superseding AD. The comment about relocating Note 1 is not adopted because the ABT is referenced in the accomplishment instructions of this AD rather than in a Note.

FAA's Determination and Requirements of This AD

This unsafe condition is likely to exist or develop on other helicopters of the same type design. Therefore, this AD is being issued to detect damage in the tailboom to prevent failure of a tailboom and subsequent loss of control of a helicopter. This AD requires a daily check of each tailboom panel to detect outer skin bulging or deformation of the tailboom. This AD allows a pilot holding at least a private pilot certificate to perform this check because it involves only a visual check for outer skin bulging or deformation of the tailboom and does not require the use of tools and can be performed equally well by a pilot or a mechanic. If there is bulging or deformation on a skin panel, this AD requires a mechanic to use an aluminum hammer, P/N 109–3101–58–2, to tap inspect the area around the bulge or deformation for debonding. This AD also requires tap inspecting the tailboom panels for debonding at 25-hour TIS intervals in certain areas on three part-numbered tail assemblies with certain serial numbers and at 50-hour TIS intervals for all affected tail assemblies except those that are required to be inspected within this 25-hour TIS interval. If there is any debonding that is not within the acceptable limits, before further flight, installing tailboom structural reinforcement MOD, P/N 3G5309P01812, is required. If there is any debonding that is within the acceptable limits, before further flight, repairing the tailboom is required. Modifying the tailboom per MOD, P/N 3G5309P01812, is terminating action for the requirements of this AD.

The short compliance time involved is required because the previously described critical unsafe condition can adversely affect the controllability and structural integrity of the helicopter. Therefore, because a daily check of the tailboom panels for outer skin bulgings or deformation and the tailboom panel inspections for debonding at 25-hour and 50-hour TIS is a very short time interval, this AD must be issued immediately.

Since a situation exists that requires the immediate adoption of this regulation, it is found that notice and opportunity for prior public comment hereon are impracticable, and that good cause exists for making this amendment effective in less than 30 days.

Costs of Compliance

We estimate that this AD will affect about 76 helicopters. We also estimate that it will take a minimal amount of time to do the daily check and about 2 work-hours per recurring inspection per helicopter to inspect the tailboom panels for debonding. The average labor rate is $85 per work-hour. Installing MOD, P/N 3G5309P01812, would require 192 work-hours at a parts cost of $52,300. Based on these figures, assuming there are 12 recurring inspections and 8 tailboom modifications, we estimate the cost of this AD on U.S. operators is $704,000.

Comments Invited

This AD is a final rule that involves requirements that affect flight safety and was not preceded by notice and an opportunity for public comment; however, we invite you to submit any written data, views, or arguments regarding this AD. Send your comments to an address listed under **ADDRESSES**. Include "Docket No. FAA–2011–1034; Directorate Identifier 2011–SW–014–AD" at the beginning of your comments. We specifically invite comments on the overall regulatory, economic, environmental, and energy aspects of the AD. We will consider all comments received by the closing date and may amend the AD in light of those comments.

We will post all comments we receive, without change, to *http://www.regulations.gov,* including any personal information you provide. We will also post a report summarizing each substantive verbal contact with FAA personnel concerning this AD. Using the search function of the docket web site, you can find and read the comments to any of our dockets, including the name of the individual who sent the comment. You may review the DOT's complete Privacy Act Statement in the **Federal Register** published on April 11, 2000 (65 FR 19477–78).

Regulatory Findings

We have determined that this AD will not have federalism implications under Executive Order 13132. This AD will not have a substantial direct effect on the States, on the relationship between the national Government and the States, or on the distribution of power and responsibilities among the various levels of government.

For the reasons discussed above, I certify that the regulation:

1. Is not a "significant regulatory action" under Executive Order 12866;
2. Is not a "significant rule" under the DOT Regulatory Policies and Procedures (44 FR 11034, February 26, 1979);
3. Will not affect intrastate aviation in Alaska to the extent that it justifies making a regulatory distinction; and
4. Will not have a significant economic impact, positive or negative, on a substantial number of small entities under the criteria of the Regulatory Flexibility Act.

We prepared an economic evaluation of the estimated costs to comply with this AD. See the AD docket to examine the economic evaluation.

Authority for This Rulemaking

Title 49 of the United States Code specifies the FAA's authority to issue rules on aviation safety. Subtitle I, Section 106, describes the authority of the FAA Administrator. Subtitle VII, Aviation Programs, describes in more detail the scope of the Agency's authority.

We are issuing this rulemaking under the authority described in Subtitle VII, Part A, Subpart III, Section 44701, "General requirements." Under that section, Congress charges the FAA with promoting safe flight of civil aircraft in air commerce by prescribing regulations for practices, methods, and procedures the Administrator finds necessary for safety in air commerce. This regulation

is within the scope of that authority because it addresses an unsafe condition that is likely to exist or develop on products identified in this rulemaking action.

List of Subjects in 14 CFR Part 39

Air transportation, Aircraft, Aviation safety, Incorporation by Reference, Safety.

Adoption of the Amendment

Accordingly, pursuant to the authority delegated to me by the Administrator, the Federal Aviation Administration amends part 39 of the Federal Aviation Regulations (14 CFR part 39) as follows:

PART 39—AIRWORTHINESS DIRECTIVES

■ 1. The authority citation for part 39 continues to read as follows:

Authority: 49 U.S.C. 106(g), 40113, 44701.

§ 39.13 [Amended]

■ 2. Section 39.13 is amended by removing Amendment 39–16129; (75 FR 3615, January 22, 2010), and by adding a new airworthiness directive (AD), Amendment 39–16816, to read as follows:

2011–20–06 Agusta S.p.A.: Amendment 39–16816. Docket No. FAA–2011–1034; Directorate Identifier 2011–SW–014–AD. Supersedes AD 2009–19–51, Amendment 39–16129; Docket No. FAA–2009–1125, Directorate Identifier 2009–SW–50–AD.

Applicability: Model AB139 and AW139 helicopters, with a tail assembly, part number (P/N) 3G5350A00132, 3G5350A00133, 3G5350A00134, or 3G5350A00135, except those with tailboom reinforcement structural retro-modification (MOD), P/N 3G5309P01812, installed, certificated in any category.

Compliance: Required as indicated.

To detect damage to the tailboom to prevent failure of a tailboom and subsequent loss of control of a helicopter, do the following:

(a) For all affected helicopters, before further flight, visually check all tailboom panels on both sides of the tailboom for skin bulging or deformation. Pay particular attention to the previously repaired areas. This visual check may be performed by an owner/operator (pilot) holding at least a private pilot certificate and must be entered into the helicopter records showing compliance with paragraph (a) of this AD in accordance with 14 CFR 43.9(a)(1)-(4) and 91.417(a)(2)(v).

(b) If there is bulging or deformation of a tailboom panel skin, before further flight, using an aluminum hammer (GF–06–00), P/N 109–3101–58–2 (aluminum hammer), tap inspect the area around the bulge or deformity for debonding. Mark the boundaries of the debond area and measure the size of the marked area.

(c) For helicopters with a tailboom assembly, P/N 3G5350A00132, 3G5350A00133, or 3G5350A00134, and a serial number (S/N) with a prefix of ''A'' up to and including S/N 7/109 for the short nose configuration and a S/N with a prefix of ''A'' up to and including S/N 7/063 for the long-nose configuration, within 25 hours time-in-service (TIS) from the last inspection or within 7 days, whichever occurs first, unless done previously, and thereafter at intervals not to exceed 25 hours TIS, tap inspect each tailboom panel on both sides of the tailboom in AREAs 3 and 5 for debonding, using an aluminum hammer as depicted in Figure 2 of Agusta Alert Bollettino Tecnico No. 139–195, Revision B, dated February 2, 2010 (ABT). First, inspect AREA 5 then AREA 3. You do not need to tap inspect the longeron area contained in AREA 3. Pay particular attention to previously repaired areas.

(d) For all affected helicopters, except those with tailboom assembly part numbers and serial numbers described in paragraph (c) of this AD, within 50 hours TIS, unless done previously, and thereafter at intervals not to exceed 50 hours TIS, tap inspect each tailboom panel on both sides of the tailboom for debonding using an aluminum hammer. Pay particular attention to the previously repaired areas.

(e) If there is any debonding, mark the debond area and measure the size of the marked area.

(f) Before further flight, install tailboom structural reinforcement per MOD, P/N 3G5309P01812; if:

(1) The mathematical area of a single debond is equal to or greater than 320 mm^2 and is wholly within AREA 3 as depicted in Figure 2 of the ABT;

(2) The mathematical area of a single debond is equal to or exceeds 150 mm^2 if the debond occurs in area 1, 2, 4, or 5 as depicted in Figure 2 of the ABT; or

(3) The distance between the edges of any two debonded areas is less than 3 times the largest debond dimension of the two debonded areas measured on a line between the centers of the two debonded areas; or

(4) A debond is within 3 mm from any bond joint edge.

(g) If none of the criteria of paragraphs (f)(1) through (f)(4) of this AD are met, before further flight, repair the debonded area of the tailboom using FAA engineering approved data and procedures or replace the tailboom with an airworthy tailboom.

(h) Modifying the tailboom per MOD, P/N 3G5309P01812, is terminating action for the requirements of this AD.

(i) To request a different method of compliance or a different compliance time for this AD, follow the procedures in 14 CFR 39.19. Contact the Manager, Safety Management Group, FAA *Attn:* Sharon Miles, ASW–111, Aviation Safety Engineer, Rotorcraft Directorate, Regulations and Guidance Group, 2601 Meacham Blvd, Fort Worth, Texas 76137, telephone (817) 222–5122, fax (817) 222–5961, for information about previously approved alternative methods of compliance.

(j) The Joint Aircraft System/Component (JASC) Code is 5302: Rotorcraft Tailboom.

(k) The inspections shall be done on both sides of the tailboom by following the specified portions of Agusta Alert Bollettino Tecnico No. 139–195, Revision B, dated February 2, 2010. The Director of the Federal Register approved this incorporation by reference in accordance with 5 U.S.C. 552(a) and 1 CFR part 51. Copies may be obtained from Agusta, Via Giovanni Agusta, 520 21017 Cascina Costa di Samarate (VA), Italy, telephone 39 0331–229111, fax 39 0331–229605/222595, or at *http://customersupport.agusta.com/technical_advice.php.* Copies may be inspected at the FAA, Office of the Regional Counsel, Southwest Region, 2601 Meacham Blvd., Room 663, Fort Worth, Texas, 76137, or at the National Archives and Records Administration (NARA). For information on the availability of this material at NARA, call 202–741–6030, or go to: *http://www.archives.gov/federal_register/code_of_federal_regulations/ibr_locations.html.*

(l) This amendment becomes effective on November 14, 2011.

Note: The subject of this AD is addressed in European Aviation Safety Agency AD No. 2011–0019, dated February 3, 2011

Issued in Fort Worth, Texas, on September 13, 2011.

Lance T. Gant,

Acting Manager, Rotorcraft Directorate, Aircraft Certification Service.

[FR Doc. 2011–27690 Filed 10–26–11; 8:45 am]

BILLING CODE 4910–13–P

DEPARTMENT OF THE TREASURY

Alcohol and Tobacco Tax and Trade Bureau

27 CFR Part 4

[Docket No. TTB–2011–0002; T.D. TTB–95; Re: Notice No. 116]

RIN 1513–AA42

Approval of Grape Variety Names for American Wines

AGENCY: Alcohol and Tobacco Tax and Trade Bureau, Treasury.

ACTION: Final rule; Treasury decision.

SUMMARY: This document adopts, as a final rule, a proposal to amend the Alcohol and Tobacco Tax and Trade Bureau regulations by adding a number of new names to the list of grape variety names approved for use in designating American wines, and to include in the list several separate entries for synonyms of existing entries so that readers can more readily find them. These amendments will allow bottlers of wine to use more grape variety names on wine labels and in wine advertisements.

DATES: *Effective Date:* This final rule is effective November 28, 2011.

FOR FURTHER INFORMATION CONTACT: Jennifer Berry, Alcohol and Tobacco

Tax and Trade Bureau, Regulations and Rulings Division, P.O. Box 18152, Roanoke, VA 24014; telephone 202–453–1039, ext. 275.

SUPPLEMENTARY INFORMATION:

Background

TTB Authority

Section 105(e) of the Federal Alcohol Administration Act (FAA Act), 27 U.S.C. 205(e), authorizes the Secretary of the Treasury to prescribe regulations for the labeling of wine, distilled spirits, and malt beverages. The FAA Act requires that these regulations, among other things, prohibit consumer deception and the use of misleading statements on labels, and ensure that labels provide the consumer with adequate information as to the identity and quality of the product. The Alcohol and Tobacco Tax and Trade Bureau (TTB) administers the regulations promulgated under the FAA Act.

Use of Grape Variety Names on Wine Labels

Part 4 of the TTB regulations (27 CFR part 4) sets forth the standards promulgated under the FAA Act for the labeling and advertising of wine. Section 4.23 of the TTB regulations (27 CFR 4.23) sets forth rules for varietal (grape type) labeling. Paragraph (a) of that section sets forth the general rule that the names of one or more grape varieties may be used as the type designation of a grape wine only if the wine is labeled with an appellation of origin as defined in § 4.25 (27 CFR 4.25). Under paragraphs (b) and (c), a wine bottler may use the name of a single grape variety on a label as the type designation of a wine if not less than 75 percent of the wine (or 51 percent in certain limited circumstances) is derived from grapes of that variety grown in the labeled appellation of origin area. Under paragraph (d), a bottler may use two or more grape variety names as the type designation of a wine if all the grapes used to make the wine are of the labeled varieties and if the percentage of the wine derived from each grape variety is shown on the label (and with additional rules in the case of multicounty and multistate appellations of origin). Paragraph (e) of § 4.23 provides that only a grape variety name approved by the TTB Administrator may be used as a type designation for an American wine and states that a list of approved grape variety names appears in subpart J of part 4.

Within subpart J of part 4, the list of prime grape variety names and their synonyms approved for use as type designations for American wines appears in § 4.91 (27 CFR 4.91). Alternative grape variety names temporarily authorized for use are listed in § 4.92 (27 CFR 4.92). Finally, § 4.93 (27 CFR 4.93) sets forth rules for the approval of grape variety names.

Approval of Grape Variety Names

Section 4.93 provides that any interested person may petition the Administrator for the approval of a grape variety name and that the petition should provide evidence of the following:

- That the new grape variety is accepted;
- That the name for identifying the grape variety is valid;
- That the variety is used or will be used in winemaking; and
- That the variety is grown and used in the United States.

Section 4.93 further provides that documentation submitted with the petition may include:

- A reference to the publication of the name of the variety in a scientific or professional journal of horticulture or a published report by a professional, scientific, or winegrowers' organization;
- A reference to a plant patent, if patented; and
- Information pertaining to the commercial potential of the variety, such as the acreage planted and its location or market studies.

Section 4.93 also places certain eligibility restrictions on the approval of grape variety names. TTB will not approve a name:

- If it has previously been used for a different grape variety;
- If it contains a term or name found to be misleading under § 4.39 (27 CFR 4.39); or
- If it contains the term ''Riesling.''

Typically, if TTB determines that the evidence submitted with a petition supports approval of the grape variety name, TTB will send a letter of approval to the petitioner advising the petitioner that TTB will propose to add the grape variety name to the list of approved grape variety names in § 4.91 at a later date. After one or more approvals have been issued, a notice of proposed rulemaking will be prepared for publication in the **Federal Register** proposing to add the name(s) to the § 4.91 list, with opportunity for public comment. In the event that one or more comments or other information demonstrate the inappropriateness of an approval action, TTB will determine not to add the grape variety name in question to the list and will advise the original petitioner that the name is no longer approved.

Notice of Proposed Rulemaking

On January 20, 2011, TTB published Notice No. 116 in the **Federal Register** (76 FR 3573) proposing to add a number of grape variety names to the list of approved names in § 4.91, either as a grape variety not already listed or as a synonym for an existing listed name. Most of the name proposals were based on petitions that TTB had received and approved, and the evidence that had been submitted in support of each petitioned for name is summarized in the preamble to Notice No. 116. These names, on which TTB solicited comments, are as follows:

Auxerrois
Biancolella
Black Monukka
Blaufränkish
Brianna
Cabernet Diane
Cabernet Doré
Canaiolo
Carignan
Corot noir
Crimson Cabernet
Erbaluce
Favorite
Forastera
Freedom
Frontenac
Frontenac gris
Garnacha
Garnacha blanca
Geneva Red 7
Graciano
Grenache blanc
Grenache noir
Grüner Veltliner
Interlaken
La Crescent
Lagrein
Louise Swenson
Lucie Kuhlmann
Mammolo
Marquette
Monastrell
Montepulciano
Negrara
Negro Amaro
Nero d'Avola
Noiret
Peloursin
Petit Bouschet
Petit Manseng
Piquepoul blanc (Picpoul)
Prairie Star
Reliance
Rondinella
Sabrevois
Sagrantino
St. Pepin
St. Vincent
Sauvignon gris
Valiant
Valvin Muscat
Vergennes

Vermentino
Wine King
Zinthiana
Zweigelt

TTB also invited comments on three petitioned-for grape names that TTB did not approve by letter—Canaiolo Nero, Moscato Greco, and Princess. In addition, TTB requested comments on a petition requesting that two grape variety names currently listed in § 4.91 as separate varieties—Petite Sirah and Durif—be recognized as synonyms. The petitions for these grape names are also summarized in the preamble to Notice No. 116.

TTB also proposed to reformat the § 4.91 grape list to include separate entries for synonyms of existing entries so that readers can more readily find a particular name. When Notice No. 116 was published, the list was structured as an alphabetical list of prime grape names, with any synonym appearing only in parenthesis after the prime grape name. For example, the name ''Black Malvoisie'' was only listed in § 4.91 as a synonym after the prime name, ''Cinsaut.'' A reader trying to determine if ''Black Malvoisie'' is an approved grape variety name might not see it in an alphabetical list that set forth ''Cinsaut'' at the beginning of the line where the ''Black Malvoisie'' synonym appears.

TTB also believes the current format suggests that synonyms are in some way not as valid as grape names as prime names when, in fact, every name in § 4.91, whether a prime name or a synonym, is equally acceptable for use as a type designation for an American wine. TTB therefore proposed in Notice No. 116 to eliminate the word ''prime'' from the heading of § 4.91, as well as from the second sentence of the introductory text of that section, and to list each synonym in the same way as a prime name. As a result, § 4.91 would simply set forth a list of grape names that have been approved as type designations for American wines, followed, in parentheses, by any approved synonyms for that name.

Finally, TTB proposed to correct a technical error in § 4.91, that is, the misspelling of the grape name ''Agawam'' as ''Agwam.'' In addition to correcting this error, TTB proposed to allow the use of the misspelling ''Agwam'' for a period of one year after publication of the final rule so that anyone holding a COLA with the misspelling has sufficient time to obtain new labels.

Comments Received

TTB received 35 comments in response to Notice No. 116, most of them generally supportive of the proposed amendments. Of these, 28 specifically support the proposal to recognize Petite Sirah and Durif as synonyms. Many of the latter are identical letters that cite the DNA research, summarized in Notice No. 116, of Dr. Carole Meredith at the University of California at Davis (UC Davis) into the identity of the Petite Sirah grape variety. They also cite as additional evidence two publications that recognize the names ''Petite Sirah'' and ''Durif'' as synonyms. One commenter expresses concern about new clones being required to be marketed as ''Durif,'' a name he notes has little market presence. In response to the last comment, TTB notes that the proposal to recognize the names as synonymous will not require that clones be marketed as ''Durif''; in fact, the reverse is true: The proposal will allow growers and vintners to use the names interchangeably.

TTB received two comments specifically in favor of the proposal to recognize Blaufränkisch as a synonym for Lemberger/Limberger, both commenters stating that they are growers of the variety.

TTB received a comment from Cornell University objecting to the proposed name for the new listing of the grape variety Geneva Red 7, which was bred at Cornell. The commenter, a Cornell plant varieties and germplasm licensing associate, states that Cornell does not approve of the name ''Geneva Red 7,'' but does approve of the name ''Geneva Red.'' TTB notes, however, that the name evidence in the petition for Geneva Red 7 included bulletins published by Cornell and a page from UC Davis's National Grape Registry. Both of these publications use the names ''Geneva Red 7'' and ''GR 7''; neither uses the name ''Geneva Red.'' Further, TTB did not propose the name ''GR 7'' because it did not believe consumers would recognize that name as a grape variety name. Although TTB understands the interest of Cornell in the determination of what name should be used for a grape variety developed under its auspices, § 4.93 requires some evidence to establish the validity of the name. Of course, TTB would be willing to reconsider this matter following receipt of a petition under § 4.93 with appropriate evidence supporting use of the name ''Geneva Red.''

One comment objects to including in the list grape varieties that are not cultivated widely enough for their names to be meaningful to consumers. The commenter states that varieties such as Sauvignon gris, Valvin Muscat, and Cabernet Diane are recent, only marginally planted hybrid varieties that have been given names which will lead the public into believing they are *Vitis vinifera* varieties. This commenter does, however, express approval of the listing of *Vitis vinifera* variety names such as Auxerrois or Grüner Veltliner, grapes that the commenter describes as widely accepted internationally.

TTB does not agree with the suggestion that a grape variety must be widely cultivated to merit inclusion in the list of approved grape names in § 4.91. Section 4.93 merely provides in this regard that the variety must be ''grown and used in the United States'' without specifying the extent which such growth and use must exist. With regard to hybrid varieties, TTB notes that they have a place in the U.S. wine industry, are popular in areas of the country where the climate makes the cultivation of *Vitis vinifera* varieties challenging, and are not per se outside the scope of approval under § 4.93. TTB therefore sees no reason to exclude from § 4.91 hybrid grape variety names that otherwise meet the standard for approval under § 4.93.

Additionally, TTB does not agree that the names Sauvignon gris, Valvin Muscat, and Cabernet Diane are misleading. Sauvignon gris, a pink-skinned mutation of the Sauvignon blanc variety is, in fact, a *Vitis vinifera* grape. Moreover, TTB notes that Valvin Muscat was developed from a crossing of Muscat Ottonel and Muscat du Moulin, while Cabernet Diane was bred from a cross of Cabernet Sauvignon and Norton. Because these latter grapes were developed from *Vitis vinifera* varieties and share both part of the name and some of the varietal characteristics of those grapes, TTB finds that they are not misleading.

Another commenter opined that some of the proposed names seem either ''self-indulgent or outright silly for a wine varietal,'' citing the name ''Princess'' as an example. TTB notes that § 4.93 does not provide for disapproval of a name because it appears to be self-indulgent or silly. So long as the name is a valid identifier of the grape variety, TTB believes that the decision whether to include it on a wine label or in a wine advertisement is a subjective matter that is best left to the wine industry.

Finally, one commenter favored recognizing Primitivo as a synonym for Zinfandel. Another commenter objected to the varietal (grape type) labeling regulations contained in § 4.23, which allow a varietal designation on a label if 75 percent (or 51 percent in the case of wine made from *Vitis labrusca* varieties) of the wine is derived from the

labeled grape variety; this commenter believes these percentages are too low and are misleading to consumers. Because neither of these issues was raised in Notice No. 116 for public comment, TTB believes that it would be inappropriate to include the suggested changes in this final rule document.

TTB Finding

After careful review of the comments discussed above, TTB has determined that it is appropriate to adopt the proposed regulatory changes contained in Notice No. 116. In addition, TTB notes that with the removal of the word ''prime'' from § 4.91, it would also be appropriate to remove the word ''prime'' from § 4.92, the list of alternative grape variety names temporarily authorized for use. Accordingly, this document removes the word ''prime'' wherever it appears in § 4.92.

Regulatory Flexibility Act

TTB certifies under the provisions of the Regulatory Flexibility Act (5 U.S.C. 601 *et seq.*) that this final rule will not have a significant economic impact on a substantial number of small entities. The decision of a grape grower to petition for a grape variety name approval, or the decision of a wine bottler to use an approved name on a label or in an advertisement, is entirely at the discretion of the grower or bottler. This regulation does not impose any new reporting, recordkeeping, or other administrative requirements. Accordingly, a regulatory flexibility analysis is not required.

Executive Order 12866

This final rule is not a significant regulatory action as defined by Executive Order 12866. Therefore, it requires no regulatory assessment.

Drafting Information

Jennifer Berry of the Regulations and Rulings Division, Alcohol and Tobacco Tax and Trade Bureau, drafted this document.

List of Subjects in 27 CFR Part 4

Administrative practice and procedure, Advertising, Customs duties and inspection, Imports, Labeling, Packaging and containers, Reporting and recordkeeping requirements, Trade practices, Wine.

Amendments to the Regulations

For the reasons discussed in the preamble, TTB amends 27 CFR part 4 as set forth below:

PART 4—LABELING AND ADVERTISING OF WINE

■ 1. The authority citation for 27 CFR part 4 continues to read as follows:

Authority: 27 U.S.C. 205, unless otherwise noted.

■ 2. Section 4.91 is amended:
■ a. By removing the word ''prime'' from the section heading and from the second sentence of the introductory text;
■ b. By adding the word ''variety'' to the second sentence of the introductory text after the second use of ''grape''; and
■ c. In the list of grape variety names following the introductory text, by removing the entries for ''Agwam'', ''Carignane'', ''Durif'', ''Grenache'', ''Limberger (Lemberger)'', ''Malvasia bianca'', and ''Petite Sirah'' and by adding new entries in alphabetical order to read as follows:

§ 4.91 List of approved names.

* * * * *

Agawam

* * * * *

Auxerrois

* * * * *

Biancolella

* * * * *

Black Malvoisie (Cinsaut)
Black Monukka
Black Muscat (Muscat Hamburg)

* * * * *

Blaufränkish (Lemberger, Limberger)

* * * * *

Brianna

* * * * *

Cabernet Diane
Cabernet Doré

* * * * *

Canaiolo (Canaiolo Nero)
Canaiolo Nero (Canaiolo)

* * * * *

Carignan (Carignane)
Carignane (Carignan)

* * * * *

Corot noir

* * * * *

Crimson Cabernet

* * * * *

Durif (Petite Sirah)

* * * * *

Erbaluce
Favorite

* * * * *

Forastera

* * * * *

Freedom

* * * * *

French Colombard (Colombard)
Frontenac
Frontenac gris

* * * * *

Fumé blanc (Sauvignon blanc)

* * * * *

Garnacha (Grenache, Grenache noir)
Garnacha blanca (Grenache blanc)

* * * * *

Geneva Red 7

* * * * *

Graciano

* * * * *

Grenache (Garnacha, Grenache noir)
Grenache blanc (Garnacha blanca)
Grenache noir (Garnacha, Grenache)

* * * * *

Grüner Veltliner

* * * * *

Interlaken

* * * * *

Island Belle (Campbell Early)

* * * * *

La Crescent

* * * * *

Lagrein

* * * * *

Lemberger (Blaufränkish, Limberger)

* * * * *

Limberger (Blaufränkisch, Lemberger)
Louise Swenson
Lucie Kuhlmann

* * * * *

Malvasia bianca (Moscato greco)
Mammolo

* * * * *

Marquette

* * * * *

Mataro (Monastrell, Mourvèdre)

* * * * *

Melon (Melon de Bourgogne)

* * * * *

Monastrell (Mataro, Mourvèdre)

* * * * *

Montepulciano

* * * * *

Moscato greco (Malvasia bianca)
Mourvèdre (Mataro, Monastrell)

* * * * *

Muscat Canelli (Muscat blanc)

* * * * *

Negrara

* * * * *

Negro Amaro
Nero d'Avola

* * * * *

Noiret

* * * * *

Peloursin
Petit Bouschet
Petit Manseng

* * * * *

Petite Sirah (Durif)

* * * * *

Picpoul (Piquepoul blanc)

* * * * *

Pinot Grigio (Pinot gris)

* * * * *

Pinot Meunier (Meunier)
* * * * *
Piquepoul blanc (Picpoul)
Prairie Star
* * * * *
Princess
* * * * *
Refosco (Mondeuse)
* * * * *
Reliance
* * * * *
Rkatsiteli (Rkatziteli)
* * * * *
Rondinella
* * * * *
Sabrevois
* * * * *
Sagrantino
* * * * *
St. Pepin
St. Vincent
* * * * *
Sauvignon gris
* * * * *
Seyval blanc (Seyval)
Shiraz (Syrah)
* * * * *
Trebbiano (Ugni blanc)
* * * * *
Valdepeñas (Tempranillo)
* * * * *
Valiant
Valvin Muscat
* * * * *
Vergennes
Vermentino
* * * * *
Vignoles (Ravat 51)
* * * * *
White Riesling (Riesling)
Wine King
* * * * *
Zinthiana
Zweigelt

■ 3. Section 4.92 is amended by removing the word ''prime'' or ''Prime'' wherever it appears, and by adding new paragraph (d) to read as follows:

§ 4.92 Alternative names permitted for temporary use.

* * * * *

(d) *Wines bottled prior to* October 29, 2012.

Alternative Name/Name
Agwam—Agawam

Signed: August 22, 2011.

John J. Manfreda,

Administrator.

Approved: September 6, 2011.

Timothy E. Skud,

Deputy Assistant Secretary (Tax, Trade, and Tariff Policy).

[FR Doc. 2011–27812 Filed 10–26–11; 8:45 am]

BILLING CODE 4810–31–P

DEPARTMENT OF THE TREASURY

Alcohol and Tobacco Tax and Trade Bureau

27 CFR Part 9

[Docket No. TTB–2010–0003; T.D. TTB–96; Notice Nos. 105, 107, and 112]

RIN 1513–AB41

Establishment of the Pine Mountain-Cloverdale Peak Viticultural Area

AGENCY: Alcohol and Tobacco Tax and Trade Bureau, Treasury.

ACTION: Final rule; Treasury Decision.

SUMMARY: This document establishes the 4,570-acre ''Pine Mountain-Cloverdale Peak'' viticultural area in portions of Mendocino and Sonoma Counties, California. The Alcohol and Tobacco Tax and Trade Bureau designates viticultural areas to allow vintners to better describe the origin of their wines and to allow consumers to better identify wines they may purchase.

DATES: *Effective date:* November 28, 2011.

FOR FURTHER INFORMATION CONTACT: Elisabeth C. Kann, Regulations and Rulings Division, Alcohol and Tobacco Tax and Trade Bureau, 1310 G St., NW., Room 200E, Washington, DC 20220; phone 202–453–1039, ext. 002.

SUPPLEMENTARY INFORMATION:

Background on Viticultural Areas

TTB Authority

Section 105(e) of the Federal Alcohol Administration Act (FAA Act), 27 U.S.C. 205(e), authorizes the Secretary of the Treasury to prescribe regulations for the labeling of wine, distilled spirits, and malt beverages. The FAA Act provides that these regulations should, among other things, prohibit consumer deception and the use of misleading statements on labels, and ensure that labels provide the consumer with adequate information as to the identity and quality of the product. The Alcohol and Tobacco Tax and Trade Bureau (TTB) administers the regulations promulgated under the FAA Act.

Part 4 of the TTB regulations (27 CFR part 4) provides for the establishment of definitive viticultural areas and the use of their names as appellations of origin on wine labels and in wine advertisements. Part 9 of the TTB regulations (27 CFR part 9) sets forth standards for the preparation, submission, and approval of petitions for the establishment or modification of American viticultural areas and lists the approved American viticultural areas.

Definition

Section 4.25(e)(1)(i) of the TTB regulations (27 CFR 4.25(e)(1)(i)) defines a viticultural area for American wine as a delimited grape-growing region having distinguishing features as described in part 9 of the regulations and a name and a delineated boundary as established in part 9 of the regulations. These designations allow vintners and consumers to attribute a given quality, reputation, or other characteristic of a wine made from grapes grown in an area to its geographic origin. The establishment of viticultural areas allows vintners to describe more accurately the origin of their wines to consumers and helps consumers to identify wines they may purchase. Establishment of a viticultural area is neither an approval nor an endorsement by TTB of the wine produced in that area.

Requirements

Section 4.25(e)(2) of the TTB regulations outlines the procedure for proposing an American viticultural area and provides that any interested party may petition TTB to establish a grape-growing region as a viticultural area. Section 9.12 of the TTB regulations prescribes standards for petitions for the establishment or modification of American viticultural areas. Such petitions must include the following:

- Evidence that the area within the viticultural area boundary is nationally or locally known by the viticultural area name specified in the petition;
- An explanation of the basis for defining the boundary of the viticultural area;
- A narrative description of the features of the viticultural area that affect viticulture, such as climate, geology, soils, physical features, and elevation, that make it distinctive and distinguish it from adjacent areas outside the viticultural area boundary;
- A copy of the appropriate United States Geological Survey (USGS) map(s) showing the location of the viticultural area, with the boundary of the viticultural area clearly drawn thereon; and
- A detailed narrative description of the viticultural area boundary based on USGS map markings.

Pine Mountain-Mayacmas Petition

Sara Schorske of Compliance Service of America prepared and submitted a petition on her own behalf and on behalf of local wine industry members to establish the 4,600-acre Pine Mountain-Mayacmas American viticultural area in northern California.

Located approximately 90 miles north of San Francisco and 5 miles north-northeast of Cloverdale, the proposed viticultural area surrounds much of Pine Mountain, which rises to the east of U.S. 101 and the Russian River, to the north of that river's Big Sulphur Creek tributary, and to the immediate west of the Mayacmas Mountains. Approximately two-thirds of the proposed viticultural area lies in the extreme southern portion of Mendocino County, with the remaining one-third located in the extreme northern portion of Sonoma County.

According to the petition and the written boundary description, the proposed viticultural area is totally within the multicounty North Coast viticultural area (27 CFR 9.30) and overlaps the northernmost portions of the Alexander Valley viticultural area (27 CFR 9.53) and the Northern Sonoma viticultural area (27 CFR 9.70). The proposed area currently has 230 acres of commercial vineyards, the petition states, with another 150 acres under development.

The petition states that the distinguishing features of the proposed viticultural area include its mountainous soils, steep topography with high elevations, and a growing season climate that contrasts with the climate of the Alexander Valley floor below. Also, the petition notes that vineyards within the proposed viticultural area generally are smaller than the vineyards found on the Alexander Valley floor.

The supporting evidence presented in the petition is summarized below.

Name Evidence

According to the petition, the ''Pine Mountain-Mayacmas'' name combines the names of the major geographical features found within the proposed viticultural area and serves to locate the proposed area within northern California. As shown on the provided USGS maps, the proposed viticultural area surrounds Pine Mountain, a 3,000-foot peak located on the western flank of the Mayacmas Mountains in northern Sonoma and southern Mendocino Counties.

The northern portion of the 1998 USGS Asti, California, quadrangle map shows Pine Mountain rising to 3,000 feet in southern Mendocino County, near the Sonoma County line. Also, as shown on the Asti map, Pine Mountain Road climbs from the Cloverdale area and marks a portion of the proposed viticultural area's southern boundary.

The October 2000 edition of the California State Automobile Association's Mendocino and Sonoma Coast road map shows the Mayacamas Mountains running north-northwest approximately from Mount St. Helena, and continuing through the Pine Mountain region to Lake Mendocino. A 1956 regional map produced by the State of California Division of Forestry, as provided with the petition, shows Pine Mountain located northeast of Cloverdale.

The 1982 publication, ''Cloverdale Then & Now—Being a History of Cloverdale, California, Its Environs, and Families,'' refers to the Pine Mountain junction and the Pine Mountain toll road in discussing the early roads of the region (page 3). This publication also includes a 1942 picture of homesteaders Hubert and George Smith on Pine Mountain (page 6). A 1985 article in the Redwood Rancher, ''The Early Wineries of the Cloverdale Area,'' by William Cordtz, discusses the grape growing of Mrs. Emily Preston in the late 1800s. The article states that the Preston Winery ''was on Pine Mountain immediately north of the present U.S. 101 bridge north of Cloverdale.''

The petition also notes that the Pine Mountain Mineral Water Company bottled water from springs located on Pine Mountain for more than 50 years, until the mid-1900s. A copy of one of the company's bottle labels included with the petition prominently displays the ''Pine Mountain'' name with a tall mountain in the background and springs in the foreground.

As noted in the petition and as shown on USGS maps, the Mayacmas Mountain range covers portions of Mendocino, Sonoma, Napa, and Lake Counties. The Mayacmas Mountain range separates Lake County from Mendocino, Sonoma, and Napa Counties, and, the petition states, that range defines the northern side of the Alexander Valley. According to the petition, the mountains were named for the Mayacmas Indians. Although the name is sometimes spelled ''Mayacamas'' or ''Maacama,'' ''Mayacmas'' is the spelling used on USGS maps.

Noting that the name ''Pine Mountain'' is commonly used throughout the United States, the petition states that the use of ''Mayacmas'' in the proposed viticultural area's name acts as a geographic modifier that pinpoints the proposed viticultural area's northern California location. The petitioners believe that ''California'' is not an appropriate geographical modifier for the viticultural area's name because there are other Pine Mountains in California. The USGS Geographical Names Information System (GNIS), for example, lists 21 additional ''Pine Mountains'' in California.

The petition also notes that the Mayacmas Mountains ''are closely associated with winegrowing'' because the range is home to many vineyards and wineries. The Mayacmas range, the petition states, divides the grape growing regions of Ukiah and Clear Lake, and borders the Alexander Valley viticultural area as well as the Napa Valley (27 CFR 9.23) and Sonoma Valley (27 CFR 9.29) viticultural areas. The petition states that ''Mayacmas is an ideal modifier'' to distinguish the proposed viticultural area ''from other places with similar names'' and will ''help consumers easily ascertain its general location.''

Boundary Evidence

According to the petition, the proposed 4,600-acre viticultural area encompasses those portions of Pine Mountain and the mountain's lower slopes that are suitable for viticulture. The petition states that the boundary was drawn in consideration of the mountain's varying steepness, water availability, and solar orientation.

The petition notes that within the proposed viticultural area, vineyard development is generally limited to small, 5- to 20-acre plots of flat or gently sloping ground found within the proposed area's mountainous terrain. Size-limiting factors for these mountain vineyard operations, the petition explains, include the need for tractor use and economical erosion control. The mountain vineyards' patchwork arrangement, the petition continues, contrasts to the larger vineyards, some of 100 acres or more, found on the floor of the nearby Alexander Valley.

The petition states that the south and southwest sides of Pine Mountain, which are included within the boundary line for the proposed viticultural area, have favorable growing season solar orientation as compared to the less sunny sides of the mountain outside the proposed boundary line, noting that successful viticulture depends partially on a favorable solar orientation to provide adequate growing season sunshine and heat accumulation. The below table summarizes the rationale for the proposed viticultural area boundary line as described in the petition:

Sides of Pine Mountain in relationship to the proposed viticultural area	Viticultural considerations
North: Outside boundary line	Inadequate sun and heat.
East: Outside boundary line	Inadequate sun and heat.
South and southwest at higher elevations: Inside boundary line	Some gentle slopes, good sun exposure and heat accumulation, and available water.
South at lower elevations below Pine Mountain Road: Outside boundary line.	Steep terrain and lack of water.
West at higher elevations: Inside boundary line	Some gentle slopes, good sun exposure and heat accumulation, and available water.
West at lower elevations: Outside boundary line	Steep terrain.

The history of grape-growing and winemaking in the Pine Mountain region goes back to the 19th century, according to the petition. The 1877 ''Thompson Historical Atlas Map of Sonoma County'' lists several grape growers with vineyards on or near Pine Mountain. The petition states that these included George Allen's 2-acre vineyard on the slopes of Pine Mountain, J.G. Rains' 10-acre vineyard, Clay Worth's 6-acre vineyard at the base of Pine Mountain, and Wellington Appleton, who owned 144 acres on the mountain's western slopes.

About 1910, the petition states, Steve Ratto developed a vineyard and winery at the 1,700-foot elevation of Pine Mountain, and that site is located inside the southwest portion of the boundary line of the proposed viticultural area. That winery site is shown on a 1956 State of California Division of Forestry map for the region that was included with the petition. The petition notes that remnants of the old winery building are still visible and that modern vineyards are on the site as well.

The petition also describes the large vineyard and winery operation of Hartwell and Emily Preston. The Preston Ranch, dating back to 1869, came to include over 1,500 acres of land, with a 10-acre vineyard, an oak cooperage, and a large winery and wine cellar. An October 29, 1874, article in the Russian River Flag newspaper lauded Preston's ''Fruit and Wine Ranch,'' and noted that it stretched from the eastern bank of the Russian River to the slopes of Pine Mountain. Reports from the time state that Preston harvested 40 tons of grapes from his vineyards in 1889. Much of the Preston winery's output was used in the various patent medicines prescribed by Emily Preston, a well-known faith healer of the time. According to the USGS Cloverdale Quadrangle map and an additional map included with the petition, the former Preston vineyard lies approximately one mile outside of the western boundary line of the proposed viticultural area.

Distinguishing Features

Differences in topography, climate, and soils distinguish the proposed viticultural area from the surrounding areas, according to the petition.

Topography

The proposed viticultural area has a higher elevation and steeper terrain than the Alexander Valley to the southwest of the proposed viticultural area. Elevations within the proposed viticultural area begin at 1,600 feet and rise to the 3,000-foot summit of Pine Mountain. The terrain within the proposed viticultural area is generally steep and mountainous, with patches of flatter ground within this steep terrain allowing for the development of areas of small, 5- to 20-acre vineyards.

In contrast, to the west and south, the Alexander Valley floor rises from about 260 feet in elevation at the Russian River and continues easterly and upward to the foothills of Pine Mountain and the Mayacmas Mountains. This flatter, lower terrain allows for the development of larger vineyards, some 100 acres or more, with different viticultural characteristics than those found in the small mountain vineyards. Areas to the north and east of the proposed viticultural area, while similar in elevation and steepness, lack the flatter patches of ground and water resources needed for vineyard development.

Climate

The distinctive growing season climatic factors of the proposed viticultural area include limited marine fog cover, abundant sunshine, mild diurnal temperature changes, significant wind, and heavy winter rainfall, according to the petition. Quoting local growers, the petition states that the cooler spring climate of Pine Mountain delays the start of vine growth by about 2 weeks, as compared to valley vineyards. The petition also notes that the proposed viticultural area's growing season climate is cooler during the day, warmer at night, windier, and wetter than the surrounding lower elevation grape growing areas.

In support of these conclusions, the petitioners gathered climatic data from six regional weather stations located within and in areas surrounding the proposed viticultural area. These were: Cloverdale (southwest of Pine Mountain at 333 feet), Hopland East (north-northwest of Pine Mountain at 1,160 feet), Hopland West (northwest of Pine Mountain at 1,200 feet), Sanel Valley (north-northwest of Pine Mountain at 525 feet), Alexander Valley (at the Seghesio Vineyards valley weather station, south-southwest of Pine Mountain at 350 feet), and Pine Mountain (at the Seghesio Vineyards mountain weather station, within the proposed viticultural area boundary line at 2,600 feet in elevation).

Fog: Despite the later start of the grape growing season at the higher elevations of the proposed viticultural area, the differing elevation-based fog patterns found on Pine Mountain allow grape growth within the proposed viticultural area to catch up with the earlier start of the valley vineyards, according to local growers. The petition states that the heavy fog that frequently blankets the surrounding valley floors fails to rise to the 1,600-foot minimum elevation of the proposed viticultural area boundary line. The petition describes the mountain as a sunny island floating above the fog, and the petition included pictorial documentation of this phenomenon.

The petition states that the proposed viticultural area averages 3 to 4 hours more sunlight per day than the Alexander Valley during the growing season. While the valley remains blanketed under a heavy fog layer until late morning and then again later in the afternoon, the higher Pine Mountain elevations routinely bask in sunshine all day long. The extra sunlight and resulting longer daily period of warmth found on the higher slopes of Pine Mountain allow grapes to develop quickly and mature around the same time as those grown in valley floor vineyards.

Temperatures: During the growing season, daytime high temperatures within the proposed viticultural area are

consistently cooler, and overnight temperatures are consistently warmer, than those found on the Alexander Valley floor, according to the petition. The petition includes temperature data gathered by local grape grower John Copeland, who gathered hourly temperature readings at several sites within the proposed viticultural area prior to planting his vineyards there. The petitioners combined Mr. Copeland's data and that of the valley weather stations noted above to document the diurnal temperature differences between the proposed area and the lower valley floor. The average temperature differences between the higher elevations on Pine Mountain and the lower elevations on the Alexander Valley floor are shown in the table below:

Region and elevation	High temperature (°F)	Low temperature (°F)	Diurnal temperature variation (in °F)
Pine Mountain (2,200 feet)	74	60	14
Valley floor (225 feet)	84	49	35

The petition states that nights are warmer on the slopes of Pine Mountain mainly because cool night mountain air, being heavier than warm air, drains off the mountain into the valley below. This downward nocturnal air flow leaves the slopes of Pine Mountain relatively warmer as compared to the cooler valley. In addition, the petition explains that the marine inversion, a summer coastal phenomenon, results from a layer of cool, heavy, and moist marine air and fog that slips beneath the layer of warmer air. This cool, foggy air blankets the Alexander Valley floor and does not mix with the lighter, warm air above it on the mountain slopes. This phenomenon, the petition continues, inverts the normal mountainous air temperature pattern of cooler temperatures above and warmer temperatures below.

Wind: The proposed viticultural area climate includes stronger and more frequent winds than those found in the valley below, the petition explains. The petition states that local growers report that Pine Mountain vineyards are naturally free of mildew, a vineyard malady commonly found in areas with more stagnant air.

Precipitation: The petition notes that the proposed viticultural area receives 30 to 60 percent more rainfall than the valley below. Southern storms often stall over Pine Mountain and the Mayacmas range, dropping more rain than in other areas. Pine Mountain also receives some upper elevation-based snow, something not encountered on the Alexander Valley floor below, the petition explains.

Soils

According to the petition, the mountain soils within the proposed viticultural area are significantly different from the alluvial valley soils found at lower elevations outside the proposed area. The petition documents these differences using United States Department of Agriculture online soil maps for Mendocino and Sonoma Counties.

However, as the petition notes, the two county soil maps use different soils names since the two counties' soil surveys were conducted years apart using different name protocols. Specifically, the Sonoma County Soil Survey shows that the portion of the proposed viticultural area that lies within that county falls within the Los Gatos-Hennecke-Maymen association, with the Los Gatos soils series the predominant soil type. The Mendocino County Soil Survey, however, shows that the portion of the proposed viticultural area within that county falls within the Maymen-Estel-Snook association.

To show that the soils within the proposed viticultural area are generally the same in each county, the petition also provides descriptions of the physical characteristics of the proposed viticultural area soils. The petition describes the parent materials of the proposed viticultural area soils as fractured shale and weathered sandstone. The petition notes that soils within the proposed viticultural area are mountainous types, which are generally steep, shallow to moderately deep, and very well to excessively well-drained. Also, these mountain soils include large amounts of sand and gravel. Pine Mountain soils are generally less than 3 feet in depth, the petition continues, with more than half at depths of 12 inches or less. In contrast, soils found on the Alexander Valley floor and in other lower elevation areas outside the proposed viticultural area are deeper, less well-drained alluvial soils.

Overlap With Established Viticultural Areas

The Sonoma County portion of the proposed viticultural area lies almost entirely within the northern portion of the established Alexander Valley viticultural area, which, in turn, lies within the northern portion of the established Northern Sonoma viticultural area. The Alexander Valley and Northern Sonoma viticultural areas both lie totally within the North Coast viticultural area. While located in whole or in part within these existing viticultural areas, the petitioners believe that the proposed viticultural area is distinguishable from those viticultural areas.

For example, the petition states that the 76,034-acre Alexander Valley viticultural area largely consists of lower elevation valley floor along the Russian River, with vineyards located below 600 feet, while the proposed viticultural area largely consists of mountainous terrain located above 1,600 feet. Further, as noted above, the petition includes climatic data documenting the differing valley and mountain growing season temperatures, wind, and fog patterns found in this region.

In addition, the petition notes that the 349,833-acre Northern Sonoma viticultural area extends 40 miles south from the Mendocino-Sonoma County line to the southernmost reaches of the Russian River Valley viticultural area (27 CFR 9.66) southwest of Sebastopol. In addition to the Russian River Valley and Alexander Valley viticultural areas, the large Northern Sonoma viticultural area includes the Knights Valley (27 CFR 9.76), Chalk Hill (27 CFR 9.52), Green Valley of Russian River Valley (27 CFR 9.57), and Dry Creek Valley (27 CFR 9.64) viticultural areas with their differing microclimates and terrains. According to the petition, the diversity within the Northern Sonoma viticultural area as a whole stands in contrast to the uniform climate and terrain found within the proposed viticultural area.

The established North Coast viticultural area lies north and northwest of San Francisco, and includes all of Sonoma County and portions of Mendocino, Napa, Lake, Solano, and Marin Counties. This very large viticultural area's distinguishing features include its distinctive coastal climate and topography. Although the proposed viticultural area has a somewhat similar climate, the petition notes, the proposed viticultural area is small, is limited to higher elevations,

and is less foggy than the general North Coast viticultural area climate.

Relationship to Existing Viticultural Areas

Alexander Valley Viticultural Area

The original Treasury Decision, T.D. ATF–187, establishing the more than 60,000-acre Alexander Valley viticultural area, was published in the **Federal Register** (49 FR 42719) on October 24, 1984. In the discussion of geographical features, T.D. ATF–187 relied on the geographical features of the valley floor and specifically excluded the mountainous area to the east, primarily because these areas were determined to have geographical features different from those in the established viticultural area. T.D. ATF–187 stated that the mountainous area has an average rainfall of 30 to 70 inches, temperatures of 54 to 58 degrees Fahrenheit, and a frost-free season of 230 to 270 days, but that the valley floor has an average rainfall of 25 to 50 inches, temperatures of 54 to 60 degrees Fahrenheit, and a frost-free season of 240 to 260 days. Regarding soils, T.D. ATF–187 stated that the mountainous area to the east is characterized primarily by the Goulding-Toomes-Guenoc and Henneke-Maymen associations, but the valley floor is characterized by the Yolo-Cortina-Pleasanton association. TTB notes that the temperature and frost-free season data concerning the valley and the mountainous areas, though different, are not so different as to be considered significantly different.

The area within the Alexander Valley viticultural area that also overlaps the proposed viticultural area was added in Treasury Decision (T.D.) ATF–233, published in the **Federal Register** (51 FR 30352) on August 26, 1986. In discussing the proposal to add approximately 1,536 acres to the existing Alexander Valley viticultural area ''at elevations between 1,600 feet and 2,400 feet above sea level on Pine Mountain,'' T.D. ATF–233 recognized that ''the land in the area shares similar geological history, topographical features, soils, and climatic conditions as adjoining land within the previously established boundary of the [Alexander Valley] viticultural area.''

However, the petition provides more detailed evidence regarding the geographical features that distinguish the entire proposed viticultural area (including the overlap area) from the greater portion of the Alexander Valley viticultural area. That evidence details the significant differences between the areas in comparable night and day temperatures, rainfall, and soils. The petitioner also included evidence that the proposed viticultural area climate includes stronger and more frequent winds than those found in the valley below.

Northern Sonoma Viticultural Area

The Alexander Valley viticultural area is entirely within the Northern Sonoma viticultural area, and the area of overlap created by the proposed viticultural area is the same with respect to both the Northern Sonoma and the Alexander Valley viticultural areas. In addition, TTB notes that the name recognition for the Northern Sonoma viticultural area does not extend into the portion of the proposed viticultural area that is outside the boundary line for the Alexander Valley viticultural area. Historically, the outer boundaries of four viticultural areas (Alexander Valley, Dry Creek Valley, Russian River Valley, and Knights Valley) have been used to define the boundary of the Northern Sonoma viticultural area.

T.D. ATF–204, published in the **Federal Register** (50 FR 20560) on May 17 1985, established the Northern Sonoma viticultural area and includes the following statement:

> '' * * * Six approved viticultural areas are located entirely within the Northern Sonoma viticultural area as follows: Chalk Hill, Alexander Valley, Sonoma County Green Valley [subsequently renamed Green Valley of Russian River Valley], Dry Creek Valley, Russian River Valley, and Knights Valley.
>
> The Sonoma County Green Valley and Chalk Hill areas are each entirely within the Russian River Valley area. The boundaries of the Alexander Valley, Dry Creek Valley, Russian River Valley, and Knights Valley areas all fit perfectly together dividing northern Sonoma County into four large areas. The Northern Sonoma area uses all of the outer boundaries of these four areas with the exception of an area southwest of the Dry Creek Valley area and west of the Russian River Valley * * * ''

TTB also notes that the Northern Sonoma viticultural area boundary has been adjusted twice to keep it coterminous with the outer boundaries of the four viticultural areas mentioned in T.D. ATF–204 (see T.D. ATF–233, published in the **Federal Register** on August 26, 1986, 51 FR 30352, and T.D. ATF–300, published in the **Federal Register** on August 9, 1990, 55 FR 32400).

North Coast Viticultural Area

In addition to what was previously stated in this document concerning the North Coast viticultural area, TTB notes that this viticultural area, which was established by T.D. ATF–145 (published in the **Federal Register** at 48 FR 42973 on September 21, 1983), encompasses approximately 40 established viticultural areas, as well as the proposed viticultural area, in northern California. In the ''Geographical Features'' portion of the preamble, T.D. ATF–145 states that climate is the major factor in distinguishing the North Coast viticultural area from surrounding areas, that all the areas within the North Coast viticultural area receive marine air, and that most of them also receive fog. T.D. ATF–145 also states that ''[d]ue to the enormous size of the North Coast, variations exist in climatic features such as temperature, rainfall and fog intrusion.''

The proposed viticultural area exhibits the basic geographical feature of the North Coast viticultural area: Marine air that results in greater amounts of rain. However, the geographical features of the proposed viticultural area are much more uniform in than those of the North Coast viticultural area. In this regard, T.D. ATF–145 specifically notes that ''approval of this viticultural area does not preclude approval of additional areas, either wholly contained with the North Coast, or partially overlapping the North Coast'' and that ''smaller viticultural areas tend to be more uniform in their geographical and climatic characteristics * * *.''

Notices of Proposed Rulemaking and Comments Received

In Notice No. 105, published in the **Federal Register** (75 FR 29686) on May 27, 2010, TTB described the petitioners' rationale for the proposed establishment of the Pine Mountain-Mayacmas viticultural area and requested comments on the proposal on or before July 26, 2010. TTB specifically invited comments regarding: (1) Whether the petition contains sufficient evidence regarding the distinguishing features of the proposed viticultural area; (2) whether the evidence submitted warrants the establishment of the proposed viticultural area within the existing North Coast viticultural area and portions of the Alexander Valley and Northern Sonoma viticultural areas; (3) whether the approval of the proposed viticultural area with the overlap with the Alexander Valley viticultural area is appropriate and/or whether the Alexander Valley and Northern Sonoma viticultural areas should be curtailed to avoid the overlap or expanded to encompass the new area; and (4) the appropriateness of the proposed ''Pine Mountain-Mayacmas'' name, including its spelling, viticultural significance, and potential conflicts with currently used brand names.

On July 16, 2010, TTB received a letter request from attorney Richard Mendelson on behalf of the Napa Valley Vintners (NVV), a wine industry trade association, which requested a 45-day extension of the comment period for Notice No. 105 to allow the NVV to complete and thoroughly vet its comments on the proposed viticultural area. In response to that request, on July 26, 2010, TTB published in the **Federal Register** (75 FR 43446) Notice No. 107 to extend the comment period for Notice No. 105 to September 9, 2010.

Comments Received in Response to Notice No. 105

During the course of the original and extended comment period on Notice No. 105, TTB received and posted 85 comments from 70 groups and individuals. Commenters included 36 industry members and 34 non-industry individuals. Of the commenters, 52 supported and 18 opposed the establishment of the Pine Mountain-Mayacmas viticultural area with the proposed name and boundary line. The comments in opposition to the proposal as published raised three issues that could warrant a change in the regulatory text proposed in Notice No. 105: (1) The appropriateness of the proposed Pine Mountain-Mayacmas name; (2) the viticultural significance of a suggested modified name for the proposed viticultural area; and (3) the inclusion of additional acreage within the boundary of the viticultural area.

With regard to the appropriateness of the Pine Mountain-Mayacmas name, some commenters questioned the ''Mayacmas'' portion of the name because it is associated with the four counties of Napa, Sonoma, Lake, and Mendocino in northern California rather than only the area within the proposed viticultural area boundary. TTB notes that ''Mayacmas'' refers to the Mayacmas Range, which is the mountain range that extends generally north from San Pablo Bay and divides the Napa Valley viticultural area from the Sonoma Valley viticultural area. The Mayacmas Range is a significant landform for both valleys. The following comments in response to Notice No. 105 stated opposition to the Pine Mountain-Mayacmas name: Nos. 41, 43, 44, 45, 48, 50, 53, 55, 56, 57, 59, 60, 63, 65, 76, 78, 79, 81, and 82 (comments 45 and 78 were submitted by the same commenter).

In response to comments opposing the ''Mayacmas'' modifier, the ''Cloverdale Peak'' geographical modifier was proposed in comment 62 by Barry Hoffner, a representative for the Pine Mountain vineyard owners. In comment 62, Mr. Hoffner describes the Pine Mountain growers as a unified group of 13 vineyard owners along the Sonoma-Mendocino boundary line, northeast of the town of Cloverdale. In comment 62, Mr. Hoffner explains that when opposition to the ''Mayacmas'' portion of the proposed ''Pine Mountain-Mayacmas'' name was expressed in some comments, the growers decided, after careful consideration and meetings with other industry groups, to propose to change the name of the proposed viticultural area to ''Pine Mountain-Cloverdale Peak.'' Cloverdale Peak is a mountain landform that adjoins Pine Mountain and has similar elevations. Comment 62 emphasizes that the combination of the ''Pine Mountain'' and ''Cloverdale Peak'' names more accurately describes the geographical location of the proposed viticultural area and would effectively address the industry opposition relating to its name.

Comment 68, submitted by Sara Schorske of Compliance Service of America (and the originator of the Pine Mountain-Mayacmas viticultural area petition), expresses support for the ''Cloverdale Peak'' name change proposed in comment 62 and states that it would provide better information for consumers by providing a more unique and specific geographical indicator for ''Pine Mountain.'' Comment 68 also provides substantiating documentation for the change, which includes various references in the petition and its exhibits to Cloverdale and its historical and current association with Pine Mountain. Comment 68 further states that Pine Mountain and Cloverdale Peak are neighboring peaks in the same range and that a portion of the Cloverdale Peak landform is already included within the proposed boundary line.

According to comment 68, Cloverdale Peak is identified on the Highland Springs USGS quadrangle map. Cloverdale Peak Road extends from Hopland to the western slope of Cloverdale Peak, and the *http://www.trails.com* Web site identifies Cloverdale Peak as a hiking and recreational destination. In addition, as noted in comment 70, submitted by the NVV, Cloverdale Peak Road begins near the center of the proposed viticultural area and runs northward through the area.

A number of commenters subsequently supported the use of the ''Cloverdale Peak'' name instead of ''Mayacmas.'' Comments submitted in response to Notice No. 105 that specifically supported the name change to ''Pine Mountain-Cloverdale Peak'' were as follows: Nos. 61, 62, 68, 69, 70, 71, 72, 73, 74, 75, 77, and 80. The comments supporting the proposed name change were submitted by individuals, vineyard and winery owners, industry association groups, and United States Congressman Mike Thompson.

The NVV (comments 64 and 70) also endorsed the modified ''Pine Mountain-Cloverdale Peak'' name. Comments from other industry groups include the Pine Mountain growers (comments 46 and 62) and the Mount Veeder Appellation Council (comments 63 and 72), each of which submitted a second comment supporting the proposed name change to ''Pine Mountain-Cloverdale Peak.'' The Sonoma County Winegrape Commission (comment 61) and the Mendocino Winegrape and Wine Commission (comment 71) supported the original Pine Mountain-Mayacmas name, and the Lake County Winegrape Commission (comment 59) and the Spring Mountain District Association (comment 76) opposed the original Pine Mountain-Mayacmas name. None of these four industry groups commented on the proposed name change to Pine Mountain-Cloverdale Peak.

The comments supporting a modification of the name of the viticultural area also gave rise to the companion issue of the viticultural significance of the modified name. The following comments support the viticultural significance of the full ''Pine Mountain-Cloverdale Peak'' name because it better describes the location of the proposed viticultural area and reduces the likelihood of consumer confusion as compared to the originally proposed ''Mayacmas'' name: Nos. 61, 62, 68, 70, 71, 75, 77, and 80.

Finally, two commenters proposed altering the boundary line proposed in Notice No. 105. After expressing support for the ''Pine Mountain-Cloverdale Peak'' name change, comment 68 also proposes expanding the northwest portion of the boundary line to include more of the Cloverdale Peak landform and altering the boundary line to pass through the summit of Cloverdale Peak; this expansion would add 500 acres to the proposed viticultural area.

According to comment 68, the elevations in the proposed 500-acre expansion area that includes the summit of Cloverdale Peak are consistent with the originally proposed Pine Mountain-Mayacmas viticultural area: The Pine Mountain area has elevations between 1,600 and 3,000 feet, and the Cloverdale Peak area is located between 1,800 and 3,000 feet, with a 2,400-foot elevation low point between the two mountain landforms. The comment also suggests that similar climatic factors exist in both

areas because the elevations of the two regions are similar. Comment 68 further claims that the soils in the proposed Cloverdale Peak expansion area are generally the same as in the Pine Mountain area, with a less than 2 percent addition of other soils, and that both mountain landforms have upland soils naturally occurring under brush or forest cover. TTB notes that comment 68 did not include any supporting documents or data relating to the geographical features of the proposed expansion area and their similarity to the distinguishing features of the proposed viticultural area. Comment 68 also states that there are currently no vineyards or wineries located within the proposed 500-acre expansion of the proposed viticultural area.

An additional boundary line change was proposed in response to Notice No. 105. A commenter proposed in comments 58 and 67 that an additional 40 acres along the southwestern portion of the proposed viticultural area be included within the boundary line to include his vineyards, although no name or geographical features evidence was submitted in support of this proposed boundary line modification.

In addition, the Mendocino Winegrape and Wine Commission made TTB aware in comment 71 that the proposed boundary line in Notice No. 105 created a small overlap with the Mendocino viticultural area at the western portion of the proposed viticultural area.

Determination To Re-Open Public Comment Period and Notice No. 112

TTB reviewed all comments received in response to Notice No. 105 with reference to the original petition materials. Because of the potential impact on label holders if TTB adopted any of the changes proposed in the comments, TTB determined that it was appropriate to re-open the comment period on Notice No. 105 for the purpose of obtaining further public comment on the three issues outlined above that were raised in response to Notice No. 105 and that affected the original proposal before taking any further regulatory action on this matter.

In Notice No. 112, published in the **Federal Register** (75 FR 78944) on December 17, 2010, TTB specifically invited comments on the use of ''Cloverdale Peak'' as a geographical name in conjunction with ''Pine Mountain'' to form the ''Pine Mountain-Cloverdale Peak'' viticultural area name. TTB also invited comments on the viticultural significance of the full ''Pine Mountain-Cloverdale Peak'' name and on the viticultural significance of ''Pine Mountain-Cloverdale,'' ''Cloverdale Peak,'' and ''Cloverdale'' standing alone. In addition, TTB invited comments on whether the boundary line should be expanded as suggested in the comments posted in response to Notice No. 105. The comment period for Notice No. 112 closed on February 15, 2011.

Comments Received in Response to Notice No. 112

TTB received five comments in response to Notice No. 112, all of which support changing the name of the proposed viticultural area to ''Pine Mountain-Cloverdale Peak.'' Two comments, Nos. 88 and 89, also specifically comment on the viticultural significance of the entire name ''Pine Mountain-Cloverdale Peak'' as opposed to ''Pine Mountain-Cloverdale,'' which the commenters state could be confusing or misleading for consumers because the city of Cloverdale is outside the boundary line of the proposed viticultural area. In addition, three comments support the 500-acre expansion of the proposed viticultural area to include the summit of Cloverdale Peak. The commenters' reasons for supporting this proposed expansion include the area's viticultural distinctiveness and local name recognition (comment 86) and the avoidance of potential consumer confusion (comments 87 and 89).

TTB Analysis

TTB carefully considered the comments received in response to Notice Nos. 105 and 112 and reviewed all petition evidence and subsequent documentation received in support of, or in opposition to, the proposed viticultural area.

TTB agrees with the public comments that the ''Mayacmas'' portion of the proposed name could be misleading or confusing for consumers due to the length of the Mayacmas Range, which extends beyond the Pine Mountain region, and TTB therefore believes that ''Mayacmas'' is an inappropriate name for this viticultural area. After reviewing the public comments as well as the evidence provided in support of the alternate ''Cloverdale Peak'' name, TTB agrees that the proposed ''Pine Mountain-Cloverdale Peak'' name is appropriate for the viticultural area because it more accurately and specifically describes the location of the viticultural area. TTB notes that the proposed modified ''Pine Mountain-Cloverdale Peak'' name received significant public support, and the modified name was not opposed by any commenters during the original and re-opened comment periods.

TTB declines to accept the proposed boundary line change to include the summit of Cloverdale Peak within the proposed Pine Mountain-Cloverdale Peak viticultural area. Although some comments assert that the inclusion of the Cloverdale Peak summit within the viticultural area will reduce the likelihood of consumer confusion relating to the location of the proposed ''Pine Mountain-Cloverdale Peak'' viticultural area, TTB notes the following:

- As noted in comment 68, a portion of the Cloverdale Peak landform is already included within the boundary line proposed in the petition, so the ''Cloverdale Peak'' geographical name accurately identifies the location of the proposed viticultural area;
- The contention that the proposed expansion area shares the same distinguishing features as the petitioned-for area is contrary to statements in the petition that areas to the north and west of the proposed boundary line are unsuitable for viticulture due to steep terrain or inadequate sun and heat;
- None of the comments supporting the proposed expansion contain sufficient supporting evidence or data to establish that the proposed expansion area shares the same distinguishing features as the originally petitioned-for viticultural area; and
- As conceded in comment 68, there are currently no vineyards or wineries located within the proposed expansion area, with the result that the area cannot be considered a ''grape-growing region,'' which is part of the definition of an American viticultural area in 27 CFR 4.25(e)(1)(i). TTB further notes that the expansion of the boundary line in this way would be incompatible with the ''area in which viticulture exists'' principle contained in 27 CFR 9.12(a)(1), which was adopted subsequent to the filing of the Pine Mountain-Mayacmas petition (see T.D. TTB–90, published in the **Federal Register** at 76 FR 3489 on January 20, 2011).

Thus, for the above reasons, TTB concludes that the boundary line proposed in Notice No. 105 should not be altered to add the proposed 500-acre Cloverdale Peak summit expansion area.

TTB does not believe that it would be appropriate to adjust the proposed boundary line in response to comments 58 and 67. Those comments requested a boundary line change to include one person's vineyards, which are located southwest of the proposed boundary line. This additional acreage has elevations below 1,600 feet and as low as 1,200 feet. Such lower elevations are

not consistent with the proposed viticultural area's elevations, which are above 1,600 feet. TTB notes that the proposed viticultural area's distinguishing features are largely based upon its high elevation and mountainous topography, and the commenter did not present any evidence in support of his contention that the same distinguishing features in the viticultural area exist in the proposed expansion area.

As noted above, the Mendocino Winegrape and Wine Commission pointed out in comment 71 that the proposed boundary line in Notice No. 105 created a small overlap with the Mendocino viticultural area in the western region of the proposed viticultural area. TTB believes that this overlap, which involves approximately 30 acres, was inadvertent and should not be included within the boundary line in question.

Finally, TTB adds that it specifically solicited comments in Notice No. 105 regarding whether the petition contained sufficient evidence to warrant the establishment of the proposed viticultural area within the existing North Coast viticultural area and portions of the Alexander Valley and Northern Sonoma viticultural areas. TTB also invited comments about whether the approval of the proposed viticultural area with the overlap with the Alexander Valley viticultural area is appropriate and/or whether the Alexander Valley and Northern Sonoma viticultural areas should be curtailed to avoid the overlap or expanded to encompass the new area.

Although some supporting comments state that the proposed viticultural area is sufficiently distinct from the floor of the Alexander Valley to warrant the creation of a new viticultural area and concur with the evidence presented in the petition, TTB notes that no comments oppose the inclusion of part of the proposed Pine Mountain-Cloverdale Peak viticultural area within the Alexander Valley viticultural area. In addition, no comments specifically address the partial overlap of the proposed viticultural area with the Northern Sonoma viticultural area and the inclusion of the proposed viticultural area within the North Coast viticultural area.

TTB Findings

After careful review of the petition and the comments received in response to Notice Nos. 105 and 112, TTB finds that the evidence submitted supports the establishment of the proposed viticultural area, subject to the following alterations to the proposal in Notice No. 105:

- The name of the viticultural area should be ''Pine Mountain-Cloverdale Peak,'' as was proposed by the petitioners in response to comments to Notice No. 105; and
- The boundary line for the viticultural area should be modified to avoid the inadvertent overlap with the Mendocino viticultural area that was created by the boundary line proposed in Notice No. 105.

With regard to the partial overlap between the proposed viticultural area and the Alexander Valley and Northern Sonoma viticultural areas, as stated above, the evidence set forth in the petition shows that there are detailed, significant differences between the topography, climate, and soils of the entire proposed viticultural area (including the overlap area) and such features of the greater portion of the Alexander Valley viticultural area. This evidence raises concerns that there may be insufficient similarity between the distinguishing features of the overlap area and distinguishing features of the rest of the Alexander Valley viticultural area. However, considering the possible alternatives, the strength of the evidence presented in support of the similarity of the distinguishing features within the proposed viticultural area, and the fact that the overlap area was specifically added to the Alexander Valley viticultural area by T.D. ATF–233, TTB believes that the establishment of the proposed viticultural area as described above is the best alternative for achieving the objectives of establishing viticultural areas set forth in the definition paragraph earlier in this document.

TTB has further determined that only the full name of the viticultural area, ''Pine Mountain-Cloverdale Peak,'' is viticulturally significant as a result of the establishment of this new viticultural area because ''Pine Mountain'' is a commonly used geographic name for multiple locations within the United States, and, as noted in the comments to Notice No. 105, the names of ''Pine Mountain-Cloverdale'' or ''Cloverdale'' alone are geographically inaccurate and could cause consumers to erroneously associate the viticultural area with the nearby city of Cloverdale, which is not within the proposed boundary line.

Accordingly, under the authority of the Federal Alcohol Administration Act and part 4 of the TTB regulations, TTB establishes the ''Pine Mountain-Cloverdale Peak'' viticultural area in Mendocino County and Sonoma County, California, effective 30 days from the date of publication of this document.

Boundary Description

See the narrative boundary description of the viticultural area in the regulatory text published at the end of this document.

Maps

The maps for determining the boundary of the viticultural area are listed below in the regulatory text.

Impact on Current Wine Labels

Part 4 of the TTB regulations prohibits any label reference on a wine that indicates or implies an origin other than the wine's true place of origin. With the establishment of this viticultural area, its name, ''Pine Mountain-Cloverdale Peak,'' is recognized as a name of viticultural significance under 27 CFR 4.39(i)(3). The text of the new regulation clarifies this point.

Once this final rule becomes effective, wine bottlers using ''Pine Mountain-Cloverdale Peak'' in a brand name, including a trademark, or in another label reference as to the origin of the wine, will have to ensure that the product is eligible to use ''Pine Mountain-Cloverdale Peak'' as an appellation of origin. The establishment of the Pine Mountain-Cloverdale Peak viticultural area will not affect the boundary line of any existing viticultural areas, and any wineries using Alexander Valley, Northern Sonoma, or North Coast as an appellation of origin or in a brand name for wines made from grapes grown within a portion of the Pine Mountain-Cloverdale Peak viticultural area that overlaps one of those viticultural areas will not be affected by the establishment of this new viticultural area.

For a wine to be labeled with a viticultural area name or with a brand name that includes a viticultural area name or other term identified as being viticulturally significant in part 9 of the TTB regulations, at least 85 percent of the wine must be derived from grapes grown within the area represented by that name or other term, and the wine must meet the other conditions listed in 27 CFR 4.25(e)(3). If the wine is not eligible for labeling with the viticultural area name or other viticulturally significant term and that name or term appears in the brand name, then the label is not in compliance and the bottler must change the brand name and obtain approval of a new label. Similarly, if the viticultural area name or other term of viticultural significance appears in another reference on the label in a misleading manner, the bottler

would have to obtain approval of a new label.

Different rules apply if a wine has a brand name containing a viticultural area name or other viticulturally significant term that was used as a brand name on a label approved before July 7, 1986. See 27 CFR 4.39(i)(2) for details.

Regulatory Flexibility Act

TTB certifies that this regulation will not have a significant economic impact on a substantial number of small entities. This regulation imposes no new reporting, recordkeeping, or other administrative requirement. Any benefit derived from the use of a viticultural area name is the result of a proprietor's efforts and consumer acceptance of wines from that area. Therefore, no regulatory flexibility analysis is required.

Executive Order 12866

This rule is not a significant regulatory action as defined by Executive Order 12866. Therefore, it requires no regulatory assessment.

Drafting Information

Elisabeth C. Kann of the Regulations and Rulings Division drafted this notice.

List of Subjects in 27 CFR Part 9

Wine.

The Regulatory Amendment

For the reasons discussed in the preamble, TTB amends title 27, chapter I, part 9, Code of Federal Regulations, as follows:

PART 9—AMERICAN VITICULTURAL AREAS

■ 1. The authority citation for part 9 continues to read as follows:

Authority: 27 U.S.C. 205.

Subpart C—Approved American Viticultural Areas

■ 2. Subpart C is amended by adding § 9.220 to read as follows:

§ 9.220 Pine Mountain-Cloverdale Peak.

(a) *Name.* The name of the viticultural area described in this section is ''Pine Mountain-Cloverdale Peak''. For purposes of part 4 of this chapter, ''Pine Mountain-Cloverdale Peak'' is a term of viticultural significance.

(b) *Approved maps.* The three United States Geological Survey 1:24,000 scale topographic maps used to determine the boundary of the Pine Mountain-Cloverdale Peak viticultural area are titled:

(1) Asti Quadrangle—California, 1998;

(2) Cloverdale Quadrangle—California, 1960, photoinspected 1975; and

(3) Highland Springs Quadrangle—California, 1959, photorevised 1978.

(c) *Boundary.* The Pine Mountain-Cloverdale Peak viticultural area is located in Mendocino and Sonoma Counties, California. The boundary of the Pine Mountain-Cloverdale Peak viticultural area is as described below:

(1) The beginning point is on the Asti map at the intersection of Pine Mountain Road and the Sonoma-Mendocino County line, section 35, T12N, R10W. From the beginning point, proceed southwesterly on Pine Mountain Road to its intersection with a light duty road known locally as Green Road, section 33, T12N, R10W; then

(2) Proceed northerly on Green Road approximately 500 feet to its first intersection with the 1,600-foot contour line, section 33, T12N, R10W; then

(3) Proceed northwesterly along the meandering 1,600-foot contour line, crossing onto the Cloverdale map in section 32, T12N, R10W, and continue to the contour line's intersection with the eastern boundary line of section 31, T12N, R10W; then

(4) Proceed straight north along the eastern boundary line of section 31, crossing the Sonoma-Mendocino line, to the boundary line's intersection with the 1,600-foot contour line on the west side of Section 29, T12N, R10W; then

(5) Proceed northeasterly along the meandering 1,600-foot contour line to its intersection with the intermittent Ash Creek, section 29, T12N, R10W; then

(6) Proceed northeasterly in a straight line, crossing onto the Asti map, to the unnamed 2,769-foot peak located south of Salty Spring Creek, section 20, T12N, R10W; then

(7) Continue northeasterly in a straight line, crossing onto the Highland Springs map, to the unnamed 2,792-foot peak in the northeast quadrant of section 21, T12N, R10W; then

(8) Proceed east-southeasterly in a straight line, crossing onto the Asti map, to the unnamed 2,198-foot peak in section 23, T12N, R10W; and then

(9) Proceed south-southeasterly in a straight line, returning to the beginning point.

Signed: July 12, 2011.

John J. Manfreda,

Administrator.

Approved: September 16, 2011.

Timothy E. Skud,

Deputy Assistant Secretary (Tax, Trade, and Tariff Policy).

[FR Doc. 2011–27813 Filed 10–26–11; 8:45 am]

BILLING CODE 4810–31–P

DEPARTMENT OF LABOR

Employee Benefits Security Administration

29 CFR Part 2570

RIN 1210–AB49

Prohibited Transaction Exemption Procedures; Employee Benefit Plans

AGENCY: Employee Benefits Security Administration, Labor.

ACTION: Final rule.

SUMMARY: This document contains a final rule that supersedes the existing procedure governing the filing and processing of applications for administrative exemptions from the prohibited transaction provisions of the Employee Retirement Income Security Act of 1974 (ERISA), the Internal Revenue Code of 1986 (the Code), and the Federal Employees' Retirement System Act of 1986 (FERSA). The Secretary of Labor is authorized to grant exemptions from the prohibited transaction provisions of ERISA, the Code, and FERSA and to establish an exemption procedure to provide for such relief. This final rule clarifies and consolidates the Department of Labor's exemption procedures and provides the public with a more comprehensive description of the prohibited transaction exemption process.

DATES: *Effective Date:* This final rule is effective December 27, 2011, and applies to all exemption applications filed on or after that date.

FOR FURTHER INFORMATION CONTACT: Eric A. Raps, Office of Exemption Determinations, Employee Benefits Security Administration, Room N–5700, U.S. Department of Labor, Washington, DC 20210, telephone (202) 693–8532. This is not a toll-free number.

SUPPLEMENTARY INFORMATION:

A. Background

On August 30, 2010, the Department published a Notice of Proposed Rulemaking in the **Federal Register** (75 FR 53172) that would update the existing procedure governing the filing and processing of applications for administrative exemptions from the prohibited transaction provisions of ERISA, the Code, and FERSA, and invited written comments from the public concerning its contents. These comments are available for review at *http://www.regulations.gov* and also under ''Public Comments'' on the ''Laws & Regulations'' page of the Department's Employee Benefits Security Administration (EBSA) Web site at *http://www.dol.gov/ebsa.*

The final rule contained in this document revises the prohibited transaction exemption procedure to reflect changes in the Department's exemption practices since the previous exemption procedure was issued in 1990 (the 1990 Exemption Procedure). Among other things, key elements of the exemption policies and guidance previously found in ERISA Technical Release 85–1 and the 1995 Exemption Publication have been consolidated within the text of a unitary, comprehensive final regulation. Adoption of this updated procedure should also promote the prompt and efficient consideration of all exemption applications by clarifying the types of information and documentation generally required for a complete filing, by affording expanded opportunities for the electronic submission of information and comments relating to an exemption, and by providing plan participants and other interested persons with a more thorough understanding of the exemption under consideration.

B. Overview of the Final Rule and Comments

The exemption procedure contained in this document (and codified at 29 CFR part 2570, subpart B) consists of 23 discrete sections (§ 2570.30 through § 2570.52), arranged by topic and generally reflecting the chronological order of steps involved in processing an exemption application. Set forth below is a summary of those aspects of the proposed rule on which the Department received comments, and the Department's response to those comments. Individuals interested in obtaining information concerning the content of the proposed rule not discussed herein should refer to the Notice of Proposed Rulemaking at 75 FR 53172.

Section 2570.30 Scope of the Regulation

Section 2570.30(b) of the proposed rule stated that ''the Department may conditionally or unconditionally exempt any fiduciary or transaction, or class of fiduciaries or transactions, from all or part of the restrictions imposed by section 406 of ERISA and the corresponding restrictions of the Code and FERSA.'' One commenter suggested that this formulation was too restrictive because, under the foregoing statutes, the Department has the authority to exempt not only fiduciaries engaged in prohibited transactions, but parties in interest (or disqualified persons under the Code) as well. Accordingly, the commenter requested that the Department broaden the scope of section 2570.30(b) to include ''parties in interest.''

The Department notes that section 2570.30(b) of the proposed rule simply restated the statutory language found at section 408(a) of ERISA concerning the scope of the Department's authority to grant administrative exemptions from the prohibited transaction provisions of ERISA. Because section 408(a) of the Act provides the Department with the authority to grant exemptions for ''any fiduciary or transaction, or class of fiduciaries or transactions,'' the Department also has the authority to provide exemptive relief to non-fiduciary parties in interest who engage in plan transactions. Therefore, it is unnecessary to adopt the commenter's suggested amendment. In this regard, the Department notes that, consistent with the legislative history of the Act,[1] the Department has routinely granted exemptive relief to non-fiduciary parties in interest and disqualified persons, and will continue to exercise its authority, as appropriate.

Section 2570.31 Definitions

Section 2570.31 of the proposed rule defines the following terms for purposes of the exemption procedure regulation: affiliate, class exemption, Department, exemption transaction, individual exemption, party in interest, pooled fund, qualified appraisal report, qualified independent appraiser, and qualified independent fiduciary.

Definition of ''Affiliate''—Section 2570.31(a) of the proposed rule specifically defined the term ''affiliate'' to include any employee or officer of the person who is highly compensated or ''[h]as direct or indirect authority, responsibility, or control regarding the custody, management, or disposition of plan assets * * *'' One commenter expressed the view that the language of this definition should be clarified so that the term ''plan assets'' would refer only to those plan assets involved in the exemption transaction. The commenter stated that, absent such a modification, a person could be deemed to be an affiliate if he or she had responsibility with respect to the assets of any plan, without regard to whether the authority or control relates to the plan at issue or the plan assets at issue.

In response to the commenter's suggestion, the Department has modified the definition of ''affiliate'' at section 2570.31(a) to clarify that the term applies to any employee or officer of the person who has direct or indirect authority, responsibility, or control regarding the custody, management, or disposition of plan assets involved in the subject exemption transaction. In addition, the Department, on its own motion, has further modified the term ''affiliate'' to clarify the scope and meaning of the term ''control'' that is contained within that definition.

Nature and Extent of Independence of Qualified Independent Appraisers and Fiduciaries—Two commenters objected to the definition of a ''qualified independent fiduciary'' (section 2570.31(j) of the proposed rule), which requires that a person serving in such capacity be ''independent of and unrelated to any party in interest engaging in the exemption transaction and its affiliates.'' One of the commenters also expressed a similar reservation with respect to the definition of a ''qualified independent appraiser'' (section 2570.31(i) of the proposed rule). One commenter opined that the words ''independent of'' and ''unrelated to'' are not defined in the proposed rule, particularly with respect to employees of the independent fiduciary who are related to employees of the party in interest (spouses, children, in-laws, etc.), and therefore should be deleted in the interests of clarity. Another commenter took the position that, if the Department's actual purpose in utilizing the foregoing language was to bar a qualified independent fiduciary from being an affiliate of the party in interest engaging in the transaction, then the Department should revise and simplify the text of section 2570.31(j) of the final rule accordingly.

As noted previously, the purpose of including these definitions in the proposed rule was to emphasize that any independent fiduciary or appraiser retained in connection with an exemption transaction must not only be ''qualified'' (*i.e.,* knowledgeable as to its duties and responsibilities under ERISA and knowledgeable as to the subject transaction and the markets, if any, where such transactions normally occur) to serve in that capacity, but also free from any relationships with the party in interest or its affiliates that could improperly affect its judgment. Because such relationships may be relevant to the Department's determination as to whether an appraiser or fiduciary is independent, the Department has not adopted the suggestions of the commenters for modifying these definitions.

[1] See H.R. Rep. No. 1280, 93d Cong., 2d Sess. 310 (1974), and also section 102 of Presidential Reorganization Plan No. 4 of 1978 (3 CFR part 332 (1978), *reprinted in* 5 U.S.C. app. at 672 (2006) *and in* 92 Stat. 3790 (1978)), effective December 31, 1978, which generally transferred the authority of the Secretary of the Treasury to issue administrative exemptions under section 4975(c)(2) of the Code to the Department of Labor.

Standards for Measuring Compensation Received By Qualified Independent Appraisers and Fiduciaries—Several commenters indicated that the Department's use of the word ''income'' in the definitions in sections 2570.31(i) and (j) (and also in sections 2570.34(c)(7) and (d)(8)) to describe the overall annual compensation received by qualified independent appraisers and fiduciaries is problematic. Two of these commenters expressed the view that substitution of the word ''revenues'' for income would be less susceptible to misinterpretation and more consistent with prior Departmental practice. One of the commenters also suggested that the text of section 2570.34(d)(8) be modified to reflect the substitution of the word ''revenues'' in place of the word ''income.'' Another commenter agreed with this view, and pointed out that the term ''income'' as a definitional term lends itself to a variety of interpretations—gross income, taxable income, etc. Similarly, another commenter suggested the substitution of the term ''gross revenue'' in lieu of the term ''income'' with respect to the compensation received by qualified independent appraisers. In general, the Department concurs, and has modified sections 2570.31(i) and (j) and sections 2570.34(c)(7) and (d)(8) in the final rule by substituting, where appropriate, the term ''revenue'' for the term ''income.''

In defining the terms ''qualified independent appraiser'' (section 2570.31(i)) and ''qualified independent fiduciary'' (section 2570.31(j)), the proposed rule provided that, in each instance, the determination as to the independence of the appraiser or fiduciary would be made ''on the basis of all relevant facts and circumstances.'' The definition of a ''qualified independent fiduciary'' further provided that, ''[a]s a general matter, an independent fiduciary retained in connection with an exemption transaction must not receive more than a *de minimis* amount of compensation (including amounts received for preparing fiduciary reports and other related duties) from the parties in interest to the transaction or their affiliates. For purposes of determining whether the compensation received by the fiduciary is *de minimis,* all compensation received by the fiduciary is taken into account. Such *de minimis* amount will ordinarily constitute 1% or less of the annual income of the qualified independent fiduciary. In all events, the burden is on the applicant to demonstrate the independence of the fiduciary.'' The definition of a ''qualified independent appraiser'' under the proposed rule described the compensation to be received by such appraisers in virtually identical terms.

The Department received a number of comments objecting to the content of the foregoing definitions under the proposed rule. Two commenters suggested that a *de minimis* or percentage test bears, at best, a narrow relationship to any duty or commitment to impartially perform independent fiduciary responsibilities under ERISA, and does not take into account the complexity, risk, expertise, or expenditure of time that such a commitment may entail. One commenter expressed the view that inserting the proposed *de minimis* and 1% standards in the text of a final regulation would mean that any firm that provides independent fiduciary services and whose compensation exceeds such thresholds is presumptively subject to improper influence from a party in interest to the exemption transaction. Two commenters further expressed the view that, if the 1% and *de minimis* aspects of the proposed rule were ultimately adopted, plan fiduciaries and officials required to retain independent fiduciaries and appraisers in connection with complex exemption transactions would inevitably limit their selections to a handful of large banking, fiduciary, or valuation firms whose compensation would satisfy the foregoing standards, thus reducing the overall level of competition for such services. By way of example, one commenter posited a complex exemption transaction which could reasonably be expected to command an independent fiduciary fee of $150,000 in a given year to be paid by a party in interest to the exemption transaction; the commenter concluded that, under the proposed rule, only firms with annual revenues of $15,000,000 or more would be presumptively independent of the party in interest.

One commenter emphasized the negative effect that the *de minimis* standard would have upon smaller fiduciary and valuation firms, opining that smaller firms often possess greater expertise and objectivity with respect to evaluating exemption transactions than their larger institutional counterparts, and often provide their services to plans at less expense as a result of lower overhead costs. Two commenters expressed the view that the reduced competition resulting from the adoption of a 1% benchmark would likely have the undesirable effect of driving up the costs of engaging an independent fiduciary for exemption transactions; one of these commenters also ventured that such a provision might cause plans, rather than parties in interest, to pay the fees of such a fiduciary. Another commenter opined that the proposed compensation limitations in the proposed rule would make it especially difficult for newly-established independent fiduciary firms with few, if any, conflict of interest or affiliation problems to compete for significant assignments with respect to exemption transactions. This commenter further stated that this market access problem for new firms would persist even if the Department had specified a higher compensation threshold (*e.g.,* 5%) in connection with the proposed *de minimis* standard.

Several commenters stated that the 1% compensation threshold for independent fiduciaries contained in the proposed rule is substantially lower than the percentage guidelines often utilized by the Department in past administrative exemptions (and in other ERISA contexts) for evaluating whether fiduciaries have a relationship with a party in interest that renders them susceptible to inappropriate influences or pressures. Two commenters specifically noted that the Department has, in past individual exemptions, permitted independent fiduciaries to derive as much as 5% of their compensation from parties in interest involved in the exemption transaction. Several commenters stated that there are currently only a small number of firms that perform an independent fiduciary role in connection with complex exemption transactions, and that the restrictions on compensation contained in the proposed rule would tend to deter such firms from accepting these types of engagements in the future. One commenter also stated that the proposed *de minimis* /1% benchmark does not account for the fact that an independent fiduciary's fee arrangement often requires that a significant portion of the fiduciary's compensation is used to pay outside lawyers, actuaries, and other consultants for services that enable the fiduciary to meet its duties to the plan.

Accordingly, several commenters expressed the opinion that the Department should consider alternatives in the final rule to the 1% and *de minimis* compensation standards for defining and evaluating the independence of fiduciaries and appraisers retained in connection with exemption transactions. In this connection, one commenter suggested that the Department should consider its proposed regulation relating to the definition of ''adequate consideration'' under section 3(18) of ERISA (see 53 FR

16732, proposed May 17, 1988), which enumerated various criteria for determining whether a plan fiduciary has made a good faith determination of the fair market value of an asset (other than a security for which there is a generally recognized market). One of the proposed criteria would require that the relevant fiduciary be independent of all parties to the transaction (other than the plan) and that the assessment of the independence of the fiduciary should be made in light of all relevant facts and circumstances. In this regard, the commenter noted that none of the proposed criteria made any references to amounts or percentages of compensation received by a fiduciary from a party in interest.

While expressing various concerns about the possible effects of an express limitation on qualified independent fiduciary compensation, another commenter nevertheless acknowledged that a fiduciary whose compensation from parties in interest with respect to a proposed transaction represents a significant portion of the fiduciary's revenues can be, or can be perceived to be, susceptible to improper influence in carrying out its fiduciary duties. Accordingly, this commenter suggested the deletion of the Department's language at section 2570.31(j) in the proposed rule concerning *de minimis* amounts and the 1% compensation standard, and substituting a number of factors that the Department would utilize in evaluating the independence of a fiduciary. These factors would include the complexity of the exemption transaction, the amount of plan assets involved in the exemption transaction (expressed in both absolute terms and as a percentage of the plan's total assets), and the expected duration of the fiduciary's engagement.

In response to these comments, the Department wishes to point out that, in defining the terms ''qualified independent appraiser'' and ''qualified independent fiduciary'', the proposed rule provided that, in each instance, the final determination as to the independence of the appraiser or fiduciary is made ''on the basis of all relevant facts and circumstances.'' The Department also notes that the references to the one percent standard for compensation received by appraisers and fiduciaries in connection with an exemption transaction was not intended as an absolute limit with respect to compensation received by such persons from parties in interest.

Thus, the Department concurs that this provision should be clarified. In this regard, the Department notes that the percentage of an appraiser's or fiduciary's annual revenue derived from a party in interest (or its affiliates) to an exemption transaction is an important factor in determining whether such person is, in fact, independent of the party in interest engaging in the covered transaction. The Department also continues to believe that the percentage of an appraiser's or fiduciary's annual revenue that is attributable to a party in interest should be a *de minimis* amount. Accordingly, absent facts and circumstances demonstrating a lack of independence, the Department will operate according to the presumption that such appraiser or fiduciary will be independent if the revenues it receives or is projected to receive, within the current federal income tax year, from parties in interest (and their affiliates) to the transaction are not more than 2% of such appraiser's or fiduciary's annual revenues based upon its prior income tax year. Although the presumption does not apply when the aforementioned percentage exceeds 2%, an appraiser or fiduciary nonetheless may be considered independent based upon other facts and circumstances provided that the appraiser or fiduciary receives or is projected to receive revenues that are not more than 5% within the current federal income tax year, from parties in interest (and their affiliates) to the transaction based upon its prior income tax year.

Accordingly, it is the Department's view that the language contained in sections 2570.31(i) and (j) in the final rule provides the Department with sufficient flexibility to take into account any and all relevant facts and circumstances that may have a bearing on its assessment of the qualifications and independence of appraisers and fiduciaries. In this connection, the Department further notes that the previously referenced factors cited by the commenter may be taken into account under this ''facts and circumstances'' standard.

Section 2570.33 Applications the Department Will Not Ordinarily Consider

Section 2570.33 describes exemption applications that the Department will not ordinarily consider, such as applications involving a transaction or transactions that are the subject of an investigation under the reporting, disclosure and fiduciary responsibility provisions in parts 1 or 4 of subtitle B of Title I of ERISA. In connection with the application content provisions of the exemption regulation, one commenter suggested that the Department modify the language of the final rule to ensure the confidentiality of information disclosed in an application (or in any amendments or supplements thereto).[2] In support of its view, the commenter stated that investigations by EBSA are confidential, and that the EBSA Enforcement Manual makes information about current enforcement proceedings subject to strict confidentiality (except with respect to other governmental agencies). The commenter also argued that, absent an amendment excluding this information from public access, certain applicants affected by the application content requirements could be stigmatized or might be deterred from applying for exemptive relief from the Department.

The Department does not concur that the final rule should be modified to address the commenter's concerns with respect to preserving the confidentiality of certain information submitted as part of an exemption application. Because such information comprises part of the record in support of an exemption, it enables the public to understand the basis for the Department's decision. Section 2570.51(a) of both the 1990 Exemption Procedure and the proposed rule stipulates that ''[t]he administrative record of each exemption application will be open to public inspection and copying.'' Thus, the Department will not process exemption applications containing such designations unless the claim of confidentiality and privilege is withdrawn or the Department determines that the designated information is not material to the exemption request. Accordingly, in order to provide further clarity, the Department has redesignated paragraph

[2] Specifically, the commenter suggested modifications to the language of sections 2570.35(a)(7) and 2570.35(b) to make allowances for the confidentiality of information submitted to the Department in connection with an exemption application. Section 2570.35(a)(7) requires that an application for an individual exemption include a brief statement to the Department disclosing whether, within the last five years, any plan affected by the exemption transaction or any party in interest involved in the exemption transaction has been under investigation or examination by, or has been engaged in litigation or a continuing controversy with, the Department, the Internal Revenue Service, the Justice Department, the Pension Benefit Guaranty Corporation, or the Federal Retirement Thrift Investment Board involving compliance with provisions of ERISA, provisions of the Code relating to employee benefit plans, or provisions of FERSA relating to the Federal Thrift Savings Fund. Section 2570.37(b) states that if, at any time during the pendency of an exemption application, the applicant or any other party in interest who would participate in the exemption transaction becomes the subject of an investigative or enforcement action by the foregoing agencies, the applicant must promptly notify the Department of such a fact. In considering this comment, the Department determined that it was appropriate to address the issue of information designated as confidential by an applicant under section 2570.33 of the final rule.

(c) of section 2570.33 as paragraph (d), and a new paragraph (c) describing the Department's policy on claims of confidentiality has been inserted.

Section 2570.34 Information To Be Included in Every Exemption Application

Disclosure of Compensation Received by Qualified Independent Appraisers and Fiduciaries—Section 2570.34(d)(8) of the proposed rule would have required that any statement provided by a qualified independent fiduciary in support of an exemption application include, among other things, a representation ''disclosing the percentage of such fiduciary's current income that was derived from any party in interest involved in the transaction or its affiliates; in general, such percentage shall be computed by comparing, in fractional form: (i) The amount of the fiduciary's projected personal or business income for the current federal income tax year that will be derived from the party in interest or its affiliates (expressed as a numerator); and (ii) The fiduciary's gross personal or business income (excluding fixed, non-discretionary retirement income) for the prior federal income tax year (expressed as a denominator).'' Section 2570.34(c)(7) of the proposed rule contained similar requirements for the content of statements submitted by a qualified independent appraiser in support of an exemption application.

One commenter suggested that this provision be amended in the final rule to expressly state that, in instances where a qualified independent fiduciary provides its services to a plan through a specialized unit which is the subsidiary or affiliate of a larger business organization, the fiduciary's revenues (the denominator of the fraction described in this subsection) should be based solely upon the revenues of the specialized unit and not the larger organization. The commenter stated that, because the purpose of examining the proportion of the independent fiduciary's compensation derived from parties in interest is to determine the fiduciary's lack of susceptibility from undue influence, the revenues of the specialized unit should be the proper focus of such an inquiry.

In addition, the commenter offered the view that the time frames contained in the foregoing denominator should reflect the greater of (i) The prior federal income tax year's income or (ii) the qualified independent fiduciary's good faith estimate of the current year's income. In the commenter's view, the relationship between the compensation in connection with the transaction in question and the current financial state of the business is as least as relevant as data that may be as much as a year old when the calculation is made.

Because, as previously noted, the focus of this provision is on the revenues generated by the independent fiduciary, the Department believes no further changes to the language of this provision are necessary. Further, the Department declines to adopt the commenter's suggested modification of the content of the denominator (as described at section 2570.34(d)(8)) with respect to the relevant time frame for computing the revenues received by an independent fiduciary from all sources. The Department is of the view that the formula described in the final rule affords greater objectivity and certainty in determining such amounts.

Specialized Statements—Section 2570.34(c) requires that a qualified independent appraiser act solely on behalf of the plan in preparing statements submitted in support of an application for exemption. In the Department's view, any appraiser retained to perform an asset valuation on behalf of a plan must discharge its responsibilities in an independent and impartial manner. In this regard, the Department expects the qualified independent appraiser's determination to be unbiased, fair, and objective, and to be made in good faith and based on a detailed analysis of the prevailing circumstances then known to the appraiser. The same general standards of professional conduct also apply, as appropriate, to statements prepared by other third party experts under section 2570.34(e).

Section 2570.35 Information To Be Included in Applications for Individual Exemptions Only

Disclosure of party in interest investments—Under section 2570.35(a)(16), as it appeared in the 1990 Exemption Procedure, the extent of applicant disclosure of plan investments with a party in interest was limited to whether or not the assets of the affected plans(s) were invested in loans to any party in interest involved in the exemption transaction, property leased to any such party in interest, or securities issued by any party in interest involved in the exemption transaction. Where such investments existed, the applicant was required to include an additional statement detailing the nature and extent of these investments, and whether a statutory or administrative exemption covered such investments.

In the proposed rule, the Department proposed an amendment to this provision that would have required an applicant to disclose whether or not the assets of the affected plan(s) had been invested directly or indirectly in any other transactions (*e.g.,* securities lending or extensions of credit), whether exempt or non-exempt, with the party in interest involved in the exemption transaction. Accordingly, such disclosure would not have been limited to plan investments in loans or leases involving the party in interest, or securities issued by the party in interest. In cases where any such investments existed, the applicant would have been required to provide the Department with additional information describing, among other things: (1) The type of investment to which the statement pertains; (2) The aggregate fair market value of all investments of this type as reflected in the plan's most recent annual report; (3) The approximate percentage of the fair market value of the plan's total assets as shown in such annual report that is represented by all investments of this type; and (4) The applicable statutory or administrative exemption covering these investments (if any).

One commenter expressed the view that this proposed revision, which requires an exemption applicant to disclose all direct or indirect investments of a plan with the party in interest (regardless of whether such investments were exempt or non-exempt under the terms of ERISA) was ''overbroad'' and would be ''extraordinarily burdensome'' for applicants. The commenter stated that, for a plan with $10 billion in assets, there could be literally thousands of transactions with or through a party in interest that would be required to be disclosed under this revised provision, regardless of how relevant these transactions might be to the exemption under consideration. The commenter questioned whether the disclosure of these transactions (and the costs associated with such disclosure) would result in a more efficient exemption process, and added that it desired to see a continuation of the Department's existing practice of inquiring during the pendency of the exemption application about other relationships and transactions concerning a plan's investments with a party in interest.

After consideration of the comment, the Department generally concurs with the concerns expressed by the commenter that compliance with the disclosure requirements described in the proposed revision to section 2570.35(a)(16) may pose practical difficulties for some prohibited transaction exemption applicants. The

purpose of this disclosure provision (as explained in the preamble of the 1990 Exemption Procedure) is to enable the Department to determine whether the exemption transaction, in conjunction with other plan investments involving parties in interest, would unduly concentrate the plan's assets in certain investments and parties so as to raise questions under the fiduciary responsibility provisions of ERISA. Accordingly, the Department has determined to modify the language in the final rule by reverting to the existing requirement, contained in the 1990 Exemption Procedure, which requires an applicant for an individual exemption to disclose information regarding any plan investments in loans to, property leased to, or securities issued by, any party in interest involved in the exemption transaction. In addition, it is noted that section 2570.35(a)(16) of the final rule does not preclude the Department from requesting, during the pendency of the exemption application, additional information from the applicant.

Retroactive exemptions—In the proposed rule, the Department added a new section 2570.35(d) to provide guidance to applicants who are seeking retroactive relief for past prohibited transactions. This new subsection incorporates the standards for retroactive exemptions that were described by the Department in ERISA Technical Release 85–1 (January 22, 1985). The Department believes that the inclusion of these standards as part of an updated and comprehensive exemption procedure regulation will provide greater clarity to applicants for retroactive relief, thereby facilitating the prompt evaluation of such applications. Among other things, the new subsection reaffirms that, as a general matter, the Department will consider granting retroactive relief for transactions already consummated only if the safeguards necessary for the grant of a prospective exemption were in place at the time of the consummated transaction. In this regard, an applicant should provide evidence that it acted in good faith at the time of the subject transaction by taking reasonable and appropriate steps to protect the plan from abuse and unnecessary risk. The new subsection also enumerates a variety of objective factors that the Department ordinarily takes into account when evaluating whether the conduct of the applicant at the time of a previously consummated transaction satisfies the good faith standard.

One commenter expressed concern about the practical effect of one of these factors (section 2570.35(d)(2)(v)), under which the Department would take into account whether ''the applicant has submitted evidence that the plan fiduciary did not engage in an act or transaction knowing that such act or transaction was prohibited under section 406 of ERISA and/or section 4975 of the Code. In this regard, the Department will accord appropriate weight to the submission of a contemporaneous, reasoned legal opinion of counsel, upon which the plan fiduciary relied in good faith before entering the act or transaction * * *.''

The commenter posited a situation in which, during the pendency of an application for prospective exemptive relief, certain exigencies (such as a change in the tax laws) create an incentive for a party in interest to immediately consummate the proposed transaction, despite the absence of administrative relief from the Department at that point in time. The commenter expressed the view that in such circumstances, where an applicant subsequently amends its application to obtain retroactive relief for a past prohibited transaction, the Department should adopt an accommodating posture with respect to those exigent circumstances that might induce a party in interest to a transaction to engage in that transaction prior to receiving a final grant of exemption.

The Department notes that the good faith factors enumerated under section 2570.35(d) do not constitute an exclusive or an exhaustive list of the criteria that the Department may consider in evaluating an application for a retroactive exemption. The determination of whether a fiduciary has acted in good faith will be based upon a review of the totality of facts and circumstances surrounding a past prohibited transaction (including the exigencies of the transaction) before determining whether a retroactive exemption is warranted. In this connection, the applicant for a retroactive exemption must demonstrate that the safeguards necessary for the grant of a prospective transaction were in place at the time that the transaction was consummated. Accordingly, the Department has determined that no modifications to section 2570.35(d)(2)(v) are warranted.

Section 2570.37 Duty To Amend and Supplement Exemption Applications

Section 2570.37(a) of the proposed rule required that an exemption applicant promptly notify the Department if, during the pendency of an exemption application, any material fact or representation contained in the application changes or is inaccurate. This section also required that, during the pendency of the exemption application, the applicant promptly notify the Department concerning any material fact or representation that had been omitted from the application. The determination whether, under the totality of the facts and circumstances, a particular statement contained in (or omitted from) an exemption application constitutes a material fact or representation is made by the Department.

One commenter interpreted the phrase ''during the pendency of the application'' contained in paragraph (a) of section 2570.37 to mean the period ''under which the application/exemption is in force.'' With this interpretation in mind, the commenter expressed the view that changes to the facts underlying the original grant of an exemption (such as the size of a company, its business affiliations, lines of business, etc.) occur all of the time. As a consequence, the commenter opined that if a party in interest to a covered transaction fails to report any changes at all to the facts and representations underlying a granted exemption, such exemption may automatically become invalid. Accordingly, the commenter proposed that the Department should limit the changes that need to be reported to the Department to those occurring prior to the granting of an exemption.

The Department does not concur with the commenter's interpretation of the words ''during the pendency of the application''. The applicable timeframe covered by section 2570.37(a) is the period between the submission of an exemption application and the point at which final administrative action is taken by the Department with respect to the application. In the case of a granted exemption involving a one-time transaction that has been consummated in accordance with the terms and conditions of the exemption, subsequent events do not affect the validity of the exemptive relief granted by the Department. In instances where the Department has granted an exemption for a transaction which is continuing in nature (*e.g.,* a lease), section 2570.49(d) of the procedure would apply. This provision stipulates that ''[f]or transactions that are continuing in nature, an exemption ceases to be effective if, during the continuation of the transaction, there are *material* [emphasis added] changes to the original facts and representations underlying such exemption or if one or more of the exemption's conditions cease to be met.'' The materiality of such changes is determined by the

Department in light of the totality of the surrounding facts and circumstances.[3] Accordingly, after considering this comment, the Department has determined not to modify the language of section 2570.37(a) in the final rule. However, in the interests of clarity, the Department has, on its own motion, deleted paragraph (d) of section 2570.37 in the final rule.

Sections 2570.40 and 2570.41 Conferences and Final Denial Letters

The 1990 Exemption Procedure stipulated that the Department would attempt to schedule a conference concerning a tentative denial letter at a mutually convenient date and time during the 45-day period following the later of (1) The date the Department received the applicant's request for a conference, or (2) the date the Department notified the applicant, after reviewing additional information submitted pursuant to section 2570.39, that it was not prepared to propose the requested exemption. The Department's proposal (at section 2570.40) would have replaced this 1990 rule by substituting a simplified procedure in order to facilitate the prompt and efficient scheduling of such conferences. The Department has largely retained the proposed language of this conference provision in the final rule, except for certain technical clarifications. In instances where the applicant has requested a conference and stated an intent to submit additional information in support of the application, the Department generally will schedule a conference for a date and time that occurs within 20 days after the date on which the Department has provided notification to the applicant that it remains unprepared to propose the requested exemption based upon the additional information submitted by the applicant. Alternatively, in instances where the applicant requests a conference without expressing an intent to submit additional information pursuant to section 2570.39, the Department generally will schedule a conference for a date and time that occurs within 40 days after the date of the issuance of the tentative denial letter.

The Department, on its own motion, has made technical corrections to section 2570.40 in the final rule to clarify how the rule would apply where an exemption applicant, within 20 days of receiving a tentative denial letter, requests a conference and expresses an intent to submit additional written information, but fails to provide such information within 40 days from receipt of the tentative denial letter.

To address this situation, the Department has inserted a new paragraph (f) in section 2570.40. This new paragraph specifies that, where an applicant has requested a conference and expressed an intent to submit additional information pursuant to section 2570.39(b), but has failed to furnish such information within 40 days from the date of the tentative denial letter, the Department will generally schedule a conference for a date and time occurring within 60 days after the date of the issuance of the tentative denial letter. As part of this technical correction, the Department also has redesignated sections 2570.40(f) and (g) of the proposed rule, respectively, as sections 2570.40(g) and (h) of the final rule.

In addition, the Department has made an additional technical correction to the text of section 2570.41 of the final rule by deleting the reference in paragraph (b) to ''section 2570.40(e)'' and substituting ''section 2570.40.''

Section 2570.49 Limits on the Effect of Exemptions

The Department, on its own motion, has made a technical refinement to this section of the final rule by adding a new paragraph (e), which clarifies that the Department possesses the sole discretion to determine the materiality of any fact or representation which underlies an administrative exemption.

C. Regulatory Impact Analysis

Executive Order 12866

Under Executive Order 12866 (58 FR 51735), the Department must determine whether a regulatory action is ''significant'' and therefore subject to review by the Office of Management and Budget (OMB). Section 3(f) of the Executive Order defines a ''significant regulatory action'' as an action that is likely to result in a rule (1) Having an annual effect on the economy of $100 million or more, or adversely and materially affecting a sector of the economy, productivity, competition, jobs, the environment, public health or safety, or State, local or tribal governments or communities (also referred to as ''economically significant''); (2) creating serious inconsistency or otherwise interfering with an action taken or planned by another agency; (3) materially altering the budgetary impacts of entitlement grants, user fees, or loan programs or the rights and obligations of recipients thereof; or (4) raising novel legal or policy issues arising out of legal mandates, the President's priorities, or the principles set forth in the Executive Order. Pursuant to the terms of the Executive Order, it has been determined that this action is not ''significant'' within the meaning of section 3(f) of the Executive Order and therefore is not subject to review by OMB.

Paperwork Reduction Act

In accordance with the Paperwork Reduction Act of 1995 (44 U.S.C. 3501–3520) (PRA 95), the Department submitted the information collection request (ICR) included in the Notice of Proposed Rulemaking to OMB for review and clearance at the time the proposed rule was published in the **Federal Register** on August 30, 2010 (75 FR 53172). OMB approved the final amendment under OMB control number 1210–0160, on October 17, 2011. The approval will expire on October 31, 2014.

The Department solicited comments concerning the ICR in connection with the Notice of Proposed Rulemaking. The Department received no comments addressing its burden estimates; therefore, no substantive changes have been made in the final rule that would affect the Department's earlier burden estimates.

The paperwork burden estimates are summarized as follows:

Type of Review: New collection.

Agency: Employee Benefits Security Administration, Department of Labor.

Title: Final Rule for Prohibited Transaction Exemption Procedures.

OMB Number: 1210–0060.

Affected Public: Business or other for-profit; not-for-profit institutions.

Respondents: 56.

Responses: 22,995.

Frequency of Response: Occasionally.

Estimated Total Annual Burden Hours: 2,564.

Estimated Total Annual Burden Cost: $1,547,013.

Regulatory Flexibility Act

The Regulatory Flexibility Act (5 U.S.C. 601 *et seq.*) (RFA) imposes certain requirements with respect to Federal rules that are subject to the notice and comment requirements of section 553(b) of the Administrative Procedure Act (5 U.S.C. 551 *et seq.*) and which are likely to have a significant economic impact on a substantial number of small entities. Unless the head of an agency certifies that a final rule is not likely to have a significant economic impact on a substantial number of small entities, section 603 of

[3] Where applicants are in doubt as to the continued validity of exemptive relief that has been granted, such applicants may seek guidance from EBSA's Office of Exemption Determinations.

the RFA requires that the agency present an initial regulatory flexibility analysis at the time of the publication of the notice of proposed rulemaking describing the impact of the rule on small entities and seeking public comment on such impact.

For purposes of the RFA, the Department continues to consider a small entity to be an employee benefit plan with fewer than 100 participants.[4] Further, while some large employers may have small plans, in general small employers maintain most small plans. Thus, the Department believes that assessing the impact of this final rule on small plans is an appropriate substitute for evaluating the effect on small entities. The definition of small entity considered appropriate for this purpose differs, however, from a definition of small business that is based on size standards promulgated by the Small Business Administration (SBA) (13 CFR 121.201) pursuant to the Small Business Act (15 U.S.C. 631 *et seq.*). The Department requested comments on the appropriateness of the size standard used in evaluating the impact of the rule on small entities but did not receive any comments.

By this standard, the Department estimates that nearly half the requests for exemptions are from small plans. Thus, of the approximately 613,000 ERISA-covered small plans, the Department estimates that 28 small plans (.000046% of small plans) file prohibited transaction exemption applications each year. The Department does not consider this to be a substantial number of small entities. Therefore, based on the foregoing, pursuant to section 605(b) of RFA, the Assistant Secretary of the Employee Benefits Security Administration hereby certifies that the final rule will not have a significant economic impact on a substantial number of small entities. The Department invited public comments on its certification and the potential impact of the rule on small entities at the proposed rule stage and did not receive any comments.

[4] The basis for this definition is found in section 104(a)(2) of the Act, which permits the Secretary of Labor to prescribe simplified annual reports for pension plans that cover fewer than 100 participants. Pursuant to the authority of section 104(a)(3), the Department has previously issued at 29 CFR 2520.104–20, 2520.104–21, 2520.104–41, 2520.104–46 and 2520.104b–10 certain simplified reporting provisions and limited exemptions from reporting and disclosure requirements for small plans, including unfunded or insured welfare plans covering fewer than 100 participants and satisfying certain other requirements.

Congressional Review Act

The final rule being issued here is subject to the provisions of the Congressional Review Act provisions of the Small Business Regulatory Enforcement Fairness Act of 1996 (5 U.S.C. 801 *et seq.*) and will be transmitted to Congress and the Comptroller General for review.

Unfunded Mandates Reform Act

For purposes of the Unfunded Mandates Reform Act of 1995 (Pub. L. 104–4), the final rule does not include any federal mandate that may result in expenditures by State, local, or tribal governments, or impose an annual burden exceeding $100 million or more, adjusted for inflation, on the private sector.

Federalism Statement

Executive Order 13132 (August 4, 1999) outlines fundamental principles of federalism and requires federal agencies to adhere to specific criteria in the process of their formulation and implementation of policies that have substantial direct effects on the States, or the relationship between the national government and the States, or on the distribution of power and responsibilities among the various levels of government. This final rule does not have federalism implications, because it has no substantial direct effect on the States, on the relationship between the national government and the States, or on the distribution of power and responsibilities among the various levels of government. Section 514 of ERISA provides, with certain exceptions specifically enumerated, that the provisions of Titles I and IV of ERISA supersede any and all laws of the States as they relate to any employee benefit plan covered under ERISA. The requirements implemented in the rule do not alter the fundamental provisions of the statute with respect to employee benefit plans, and as such would have no implications for the States or the relationship or distribution of power between the national government and the States.

List of Subjects in 29 CFR Part 2570

Administrative practice and procedure, Employee benefit plans, Employee Retirement Income Security Act, Federal Employees' Retirement System Act, Exemptions, Fiduciaries, Party in interest, Pensions, Prohibited transactions, Trusts and trustees.

For the reasons set forth in the preamble, the Department amends subchapter G, part 2570 of chapter XXV of title 29 of the Code of Federal Regulations as follows:

PART 2570—PROCEDURAL REGULATIONS UNDER THE EMPLOYEE RETIREMENT INCOME SECURITY ACT

■ 1. Revise the authority citation for part 2570 to read as follows:

Authority: 5 U.S.C. 8477; 29 U.S.C. 1002(40), 1021, 1108, 1132, and 1135; sec. 102, Reorganization Plan No. 4 of 1978, 5 U.S.C. App at 672 (2006); Secretary of Labor's Order 3–2010, 75 FR 55354 (September 10, 2010).

■ 2. Revise subpart B to part 2570 to read as follows:

Subpart B—Procedures Governing the Filing and Processing of Prohibited Transaction Exemption Applications

Sec.

2570.30 Scope of rules.
2570.31 Definitions.
2570.32 Persons who may apply for exemptions.
2570.33 Applications the Department will not ordinarily consider.
2570.34 Information to be included in every exemption application.
2570.35 Information to be included in applications for individual exemptions only.
2570.36 Where to file an application.
2570.37 Duty to amend and supplement exemption applications.
2570.38 Tentative denial letters.
2570.39 Opportunities to submit additional information.
2570.40 Conferences.
2570.41 Final denial letters.
2570.42 Notice of proposed exemption.
2570.43 Notification of interested persons by applicant.
2570.44 Withdrawal of exemption applications.
2570.45 Requests for reconsideration.
2570.46 Hearings in opposition to exemptions from restrictions on fiduciary self-dealing.
2570.47 Other hearings.
2570.48 Decision to grant exemptions.
2570.49 Limits on the effect of exemptions.
2570.50 Revocation or modification of exemptions.
2570.51 Public inspection and copies.
2570.52 Effective date.

Subpart B—Procedures Governing the Filing and Processing of Prohibited Transaction Exemption Applications

§ 2570.30 Scope of rules.

(a) The rules of procedure set forth in this subpart apply to prohibited transaction exemptions issued by the Department under the authority of:

(1) Section 408(a) of the Employee Retirement Income Security Act of 1974 (ERISA);

(2) Section 4975(c)(2) of the Internal Revenue Code of 1986 (the Code); [1] or

(3) The Federal Employees' Retirement System Act of 1986 (FERSA) (5 U.S.C. 8477(c)(3)).

(b) Under these rules of procedure, the Department may conditionally or unconditionally exempt any fiduciary or transaction, or class of fiduciaries or transactions, from all or part of the restrictions imposed by section 406 of ERISA and the corresponding restrictions of the Code and FERSA. While administrative exemptions granted under these rules are ordinarily prospective in nature, an applicant may also obtain retroactive relief for past prohibited transactions if certain safeguards described in this subpart were in place at the time the transaction was consummated.

(c) These rules govern the filing and processing of applications for both individual and class exemptions that the Department may propose and grant pursuant to the authorities cited in paragraph (a) of this section. The Department may also propose and grant exemptions on its own motion, in which case the procedures relating to publication of notices, hearings, evaluation and public inspection of the administrative record, and modification or revocation of previously granted exemptions will apply.

(d) The issuance of an administrative exemption by the Department under these procedural rules does not relieve a fiduciary or other party in interest or disqualified person with respect to a plan from the obligation to comply with certain other provisions of ERISA, the Code, or FERSA, including any prohibited transaction provisions to which the exemption does not apply, and the general fiduciary responsibility provisions of ERISA which require, among other things, that a fiduciary discharge his or her duties respecting the plan solely in the interests of the participants and beneficiaries of the plan and in a prudent fashion; nor does it affect the requirement of section 401(a) of the Code that the plan must operate for the exclusive benefit of the employees of the employer maintaining the plan and their beneficiaries.

(e) The Department will not propose or issue exemptions upon oral request alone, nor will the Department grant exemptions orally. An applicant for an administrative exemption may request and receive oral advice from Department employees in preparing an exemption application. However, such advice does not constitute part of the administrative record and is not binding on the Department in its processing of an exemption application or in its examination or audit of a plan.

(f) The Department will generally treat any exemption application that is filed solely under section 408(a) of ERISA or solely under section 4975(c)(2) of the Code as an exemption request filed under both section 408(a) and section 4975(c)(2) if it relates to a transaction that would be prohibited both by ERISA and the corresponding provisions of the Code.

§ 2570.31 Definitions.

For purposes of these procedures, the following definitions apply:

(a) An *affiliate* of a person means—

(1) Any person directly or indirectly through one or more intermediaries, controlling, controlled by, or under common control with the person. For purposes of this paragraph, the term ''control'' means the power to exercise a controlling influence over the management or policies of a person other than an individual;

(2) Any director of, relative of, or partner in, any such person;

(3) Any corporation, partnership, trust, or unincorporated enterprise of which such person is an officer, director, or a 5 percent or more partner or owner; or

(4) Any employee or officer of the person who—

(i) Is highly compensated (as defined in section 4975(e)(2)(H) of the Code), or

(ii) Has direct or indirect authority, responsibility, or control regarding the custody, management, or disposition of plan assets involved in the subject exemption transaction.

(b) A *class exemption* is an administrative exemption, granted under section 408(a) of ERISA, section 4975(c)(2) of the Code, and/or 5 U.S.C. 8477(c)(3), which applies to any transaction and party in interest within the class of transactions and parties in interest specified in the exemption when the conditions of the exemption are satisfied.

(c) *Department* means the U.S. Department of Labor and includes the Secretary of Labor or his or her delegate exercising authority with respect to prohibited transaction exemptions to which this subpart applies.

(d) *Exemption transaction* means the transaction or transactions for which an exemption is requested.

(e) An *individual exemption* is an administrative exemption, granted under section 408(a) of ERISA, section 4975(c)(2) of the Code, and/or 5 U.S.C. 8477(c)(3), which applies only to the specific parties in interest and transactions named or otherwise defined in the exemption.

(f) A *party in interest* means a person described in section 3(14) of ERISA or 5 U.S.C. 8477(a)(4) and includes a *disqualified person,* as defined in section 4975(e)(2) of the Code.

(g) *Pooled fund* means an account or fund for the collective investment of the assets of two or more unrelated plans, including (but not limited to) a pooled separate account maintained by an insurance company and a common or collective trust fund maintained by a bank or similar financial institution.

(h) A *qualified appraisal report* is any appraisal report that satisfies all of the requirements set forth in this subpart at § 2570.34(c)(4).

(i) A *qualified independent appraiser* is any individual or entity with appropriate training, experience, and facilities to provide a qualified appraisal report on behalf of the plan regarding the particular asset or property appraised in the report, that is independent of and unrelated to any party in interest engaging in the exemption transaction and its affiliates; in general, the determination as to the independence of the appraiser is made by the Department on the basis of all relevant facts and circumstances. In making this determination, the Department generally will take into account the amount of both the appraiser's revenues and projected revenues for the current federal income tax year (including amounts received for preparing the appraisal report) that will be derived from the party in interest or its affiliates relative to the appraiser's revenues from all sources for the prior federal income tax year. Absent facts and circumstances demonstrating a lack of independence, the Department will operate according to the presumption that such appraiser will be independent if the revenues it receives or is projected to receive, within the current federal income tax year, from parties in interest (and their affiliates) to the transaction are not more than 2% of such appraiser's annual revenues based upon its prior income tax year. Although the presumption does not apply when the aforementioned percentage exceeds 2%, an appraiser nonetheless may be considered independent based upon other facts and circumstances provided that it receives or is projected to receive revenues that are not more than 5% within the current federal income tax year from parties in interest (and their

[1] Section 102 of Presidential Reorganization Plan No. 4 of 1978 (3 CFR part 332 (1978), *reprinted in* 5 U.S.C. app. at 672 (2006), *and in* 92 Stat. 3790 (1978)), effective December 31, 1978, generally transferred the authority of the Secretary of the Treasury to issue administrative exemptions under section 4975(c)(2) of the Code to the Department of Labor.

affiliates) to the transaction based upon its prior income tax year.

(j) A *qualified independent fiduciary* is any individual or entity with appropriate training, experience, and facilities to act on behalf of the plan regarding the exemption transaction in accordance with the fiduciary duties and responsibilities prescribed by ERISA, that is independent of and unrelated to any party in interest engaging in the exemption transaction and its affiliates; in general, the determination as to the independence of a fiduciary is made by the Department on the basis of all relevant facts and circumstances. In making this determination, the Department generally will take into account the amount of both the fiduciary's revenues and projected revenues for the current federal income tax year (including amounts received for preparing fiduciary reports) that will be derived from the party in interest or its affiliates relative to the fiduciary's revenues from all sources for the prior federal income tax year. Absent facts and circumstances demonstrating a lack of independence, the Department will operate according to the presumption that such fiduciary will be independent if the revenues it receives or is projected to receive, within the current federal income tax year, from parties in interest (and their affiliates) to the transaction are not more than 2% of such fiduciary's annual revenues based upon its prior income tax year. Although the presumption does not apply when the aforementioned percentage exceeds 2%, a fiduciary nonetheless may be considered independent based upon other facts and circumstances provided that it receives or is projected to receive revenues that are not more than 5% within the current federal income tax year from parties in interest (and their affiliates) to the transaction based upon its prior income tax year.

§ 2570.32 Persons who may apply for exemptions.

(a) The Department will initiate exemption proceedings upon the application of:

(1) Any party in interest to a plan who is or may be a party to the exemption transaction;

(2) Any plan which is a party to the exemption transaction; or

(3) In the case of an application for an exemption covering a class of parties in interest or a class of transactions, in addition to any person described in paragraphs (a)(1) and (2) of this section, an association or organization representing parties in interest who may be parties to the exemption transaction.

(b) An application by or for a person described in paragraph (a) of this section, may be submitted by the applicant or by an authorized representative. An application submitted by a representative of the applicant must include proof of authority in the form of:

(1) A power of attorney; or

(2) A written certification from the applicant that the representative is authorized to file the application.

(c) If the authorized representative of an applicant submits an application for an exemption to the Department together with proof of authority to file the application as required by paragraph (b) of this section, the Department will direct all correspondence and inquiries concerning the application to the representative unless requested to do otherwise by the applicant.

§ 2570.33 Applications the Department will not ordinarily consider.

(a) The Department ordinarily will not consider:

(1) An application that fails to include all the information required by §§ 2570.34 and 2570.35 of this subpart or otherwise fails to conform to the requirements of these procedures; or

(2) An application involving a transaction or transactions which are the subject of an investigation for possible violations of part 1 or 4 of subtitle B of Title I of ERISA or section 8477 or 8478 of FERSA or an application involving a party in interest who is the subject of such an investigation or who is a defendant in an action by the Department or the Internal Revenue Service to enforce the above-mentioned provisions of ERISA or FERSA.

(b) An application for an individual exemption relating to a specific transaction or transactions ordinarily will not be considered if the Department has under consideration a class exemption relating to the same type of transaction or transactions. Notwithstanding the foregoing, the Department may consider such an application if the issuance of the final class exemption may not be imminent, and the Department determines that time constraints necessitate consideration of the transaction on an individual basis.

(c) The administrative record of an exemption application includes the initial exemption application and any supporting information provided by the applicant (as well as any comments and testimony received by the Department in connection with an application). If an applicant designates as confidential any information required by these regulations or requested by the Department, the Department will determine whether the information is material to the exemption determination. If it determines the information to be material, the Department will not process the application unless the applicant withdraws the claim of confidentiality.

(d) If for any reason the Department decides not to consider an exemption application, it will inform the applicant in writing of that decision and of the reasons therefore.

§ 2570.34 Information to be included in every exemption application.

(a) All applications for exemptions must contain the following information:

(1) The name(s) of the applicant(s);

(2) A detailed description of the exemption transaction including identification of all the parties in interest involved, a description of any larger integrated transaction of which the exemption transaction is a part, and a chronology of the events leading up to the transaction;

(3) The identity of any representatives for the affected plan(s) and parties in interest and what individuals or entities they represent;

(4) The reasons a plan would have for entering into the exemption transaction;

(5) The prohibited transaction provisions from which exemptive relief is requested and the reason why the transaction would violate each such provision;

(6) Whether the exemption transaction is customary for the industry or class involved;

(7) Whether the exemption transaction is or has been the subject of an investigation or enforcement action by the Department or by the Internal Revenue Service; and

(8) The hardship or economic loss, if any, which would result to the person or persons on behalf of whom the exemption is sought, to affected plans, and to their participants and beneficiaries from denial of the exemption.

(b) All applications for exemption must also contain the following:

(1) A statement explaining why the requested exemption would be—

(i) Administratively feasible;

(ii) In the interests of affected plans and their participants and beneficiaries; and

(iii) Protective of the rights of participants and beneficiaries of affected plans.

(2) With respect to the notification of interested persons required by § 2570.43:

(i) A description of the interested persons to whom the applicant intends to provide notice;

(ii) The manner in which the applicant will provide such notice; and

(iii) An estimate of the time the applicant will need to furnish notice to all interested persons following publication of a notice of the proposed exemption in the **Federal Register**.

(3) If an advisory opinion has been requested by any party to the exemption transaction from the Department with respect to any issue relating to the exemption transaction—

(i) A copy of the letter concluding the Department's action on the advisory opinion request; or

(ii) If the Department has not yet concluded its action on the request:

(A) A copy of the request or the date on which it was submitted together with the Department's correspondence control number as indicated in the acknowledgment letter; and

(B) An explanation of the effect of the issuance of an advisory opinion upon the exemption transaction.

(4) If the application is to be signed by anyone other than an individual party in interest seeking exemptive relief on his or her own behalf, a statement which—

(i) Identifies the individual signing the application and his or her position or title; and

(ii) Explains briefly the basis of his or her familiarity with the matters discussed in the application.

(5)(i) A declaration in the following form:

Under penalty of perjury, I declare that I am familiar with the matters discussed in this application and, to the best of my knowledge and belief, the representations made in this application are true and correct.

(ii) This declaration must be dated and signed by:

(A) The applicant, in its individual capacity, in the case of an individual party in interest seeking exemptive relief on his or her own behalf;

(B) A corporate officer or partner where the applicant is a corporation or partnership;

(C) A designated officer or official where the applicant is an association, organization or other unincorporated enterprise; or

(D) The plan fiduciary that has the authority, responsibility, and control with respect to the exemption transaction where the applicant is a plan.

(c) Specialized statements, as applicable, from a qualified independent appraiser acting solely on behalf of the plan, such as appraisal reports or analyses of market conditions, submitted to support an application for exemption must be accompanied by a statement of consent from such appraiser acknowledging that the statement is being submitted to the Department as part of an application for exemption. Such statements must also contain the following written information:

(1) A copy of the qualified independent appraiser's engagement letter with the plan describing the specific duties the appraiser shall undertake;

(2) A summary of the qualified independent appraiser's qualifications to serve in such capacity;

(3) A detailed description of any relationship that the qualified independent appraiser has had or may have with any party in interest engaging in the transaction with the plan, or its affiliates, that may influence the appraiser;

(4) A written appraisal report prepared by the qualified independent appraiser, acting solely on behalf of the plan, rather than, for example, on behalf of the plan sponsor, which satisfies the following requirements:

(i) The report must describe the method(s) used in determining the fair market value of the subject asset(s) and an explanation of why such method best reflects the fair market value of the asset(s);

(ii) The report must take into account any special benefit that the party in interest or its affiliate(s) may derive from control of the asset(s), such as from owning an adjacent parcel of real property or gaining voting control over a company; and

(iii) The report must be current and not more than one year old from the date of the transaction, and there must be a written update by the qualified independent appraiser affirming the accuracy of the appraisal as of the date of the transaction. If the appraisal report is a year old or more, a new appraisal shall be submitted to the Department by the applicant.

(5) If the subject of the appraisal report is real property, the qualified independent appraiser shall submit a written representation that he or she is a member of a professional organization of appraisers that can sanction its members for misconduct;

(6) If the subject of the appraisal report is an asset other than real property, the qualified independent appraiser shall submit a written representation describing the appraiser's prior experience in valuing assets of the same type; and

(7) The qualified independent appraiser shall submit a written representation disclosing the percentage of its current revenue that is derived from any party in interest involved in the transaction or its affiliates; in general, such percentage shall be computed by comparing, in fractional form:

(i) The amount of the appraiser's projected revenues from the current federal income tax year (including amounts received from preparing the appraisal report) that will be derived from the party in interest or its affiliates (expressed as a numerator); and

(ii) The appraiser's revenues from all sources for the prior federal income tax year (expressed as a denominator).

(d) For those exemption transactions requiring the retention of a qualified independent fiduciary to represent the interests of the plan, a statement must be submitted by such fiduciary that contains the following written information:

(1) A signed and dated declaration under penalty of perjury that, to the best of the qualified independent fiduciary's knowledge and belief, all of the representations made in such statement are true and correct;

(2) A copy of the qualified independent fiduciary's engagement letter with the plan describing the fiduciary's specific duties;

(3) An explanation for the conclusion that the fiduciary is a qualified independent fiduciary, which also must include a summary of that person's qualifications to serve in such capacity, as well as a description of any prior experience by that person or other demonstrated characteristics of the fiduciary (such as special areas of expertise) that render that person or entity suitable to perform its duties on behalf of the plan with respect to the exemption transaction;

(4) A detailed description of any relationship that the qualified independent fiduciary has had or may have with the party in interest engaging in the transaction with the plan or its affiliates;

(5) An acknowledgement by the qualified independent fiduciary that it understands its duties and responsibilities under ERISA in acting as a fiduciary on behalf of the plan rather than, for example, acting on behalf of the plan sponsor;

(6) The qualified independent fiduciary's opinion on whether the proposed transaction would be in the interests of the plan and of its participants and beneficiaries, and protective of the rights of participants and beneficiaries of such plan, along

with a statement of the reasons on which the opinion is based;

(7) Where the proposed transaction is continuing in nature, a declaration by the qualified independent fiduciary that it is authorized to take all appropriate actions to safeguard the interests of the plan, and shall, during the pendency of the transaction:

(i) Monitor the transaction on behalf of the plan on a continuing basis;

(ii) Ensure that the transaction remains in the interests of the plan and, if not, take any appropriate actions available under the particular circumstances; and

(iii) Enforce compliance with all conditions and obligations imposed on any party dealing with the plan with respect to the transaction; and

(8) The qualified independent fiduciary shall submit a written representation disclosing the percentage of such fiduciary's current revenue that is derived from any party in interest involved in the transaction or its affiliates; in general, such percentage shall be computed by comparing, in fractional form:

(i) The amount of the fiduciary's projected revenues from the current federal income tax year that will be derived from the party in interest or its affiliates (expressed as a numerator); and

(ii) The fiduciary's revenues from all sources (excluding fixed, non-discretionary retirement income) for the prior federal income tax year (expressed as a denominator).

(e) Specialized statements, as applicable, from other third-party experts, including but not limited to economists or market specialists, submitted on behalf of the plan to support an application for exemption must be accompanied by a statement of consent from such expert acknowledging that the statement prepared on behalf of the plan is being submitted to the Department as part of an application for exemption. Such statements must also contain the following written information:

(1) A copy of the expert's engagement letter with the plan describing the specific duties the expert will undertake;

(2) A summary of the expert's qualifications to serve in such capacity; and

(3) A detailed description of any relationship that the expert has had or may have with any party in interest engaging in the transaction with the plan, or its affiliates, that may influence the actions of the expert.

(f) An application for exemption may also include a draft of the requested exemption which describes the transaction and parties in interest for which exemptive relief is sought and the specific conditions under which the exemption would apply.

§ 2570.35 Information to be included in applications for individual exemptions only.

(a) Except as provided in paragraph (c) of this section, every application for an individual exemption must include, in addition to the information specified in § 2570.34 of this subpart, the following information:

(1) The name, address, telephone number, and type of plan or plans to which the requested exemption applies;

(2) The Employer Identification Number (EIN) and the plan number (PN) used by such plan or plans in all reporting and disclosure required by the Department;

(3) Whether any plan or trust affected by the requested exemption has ever been found by the Department, the Internal Revenue Service, or by a court to have violated the exclusive benefit rule of section 401(a) of the Code, section 4975(c)(1) of the Code, section 406 or 407(a) of ERISA, or 5 U.S.C. 8477(c)(3), including a description of the circumstances surrounding such violation;

(4) Whether any relief under section 408(a) of ERISA, section 4975(c)(2) of the Code, or 5 U.S.C. 8477(c)(3) has been requested by, or provided to, the applicant or any of the parties on behalf of whom the exemption is sought and, if so, the exemption application number or the prohibited transaction exemption number;

(5) Whether the applicant or any of the parties in interest involved in the exemption transaction is currently, or has been within the last five years, a defendant in any lawsuit or criminal action concerning such person's conduct as a fiduciary or party in interest with respect to any plan (other than a lawsuit with respect to a routine claim for benefits), and a description of the circumstances of such lawsuit or criminal action;

(6) Whether the applicant (including any person described in § 2570.34(b)(5)(ii)) or any of the parties in interest involved in the exemption transaction has, within the last 13 years, been either convicted or released from imprisonment, whichever is later, as a result of: any felony involving abuse or misuse of such person's position or employment with an employee benefit plan or a labor organization; any felony arising out of the conduct of the business of a broker, dealer, investment adviser, bank, insurance company or fiduciary; income tax evasion; any felony involving the larceny, theft, robbery, extortion, forgery, counterfeiting, fraudulent concealment, embezzlement, fraudulent conversion, or misappropriation of funds or securities; conspiracy or attempt to commit any such crimes or a crime of which any of the foregoing crimes is an element; or any other crime described in section 411 of ERISA, and a description of the circumstances of any such conviction. For purposes of this section, a person shall be deemed to have been ''convicted'' from the date of the judgment of the trial court, regardless of whether that judgment remains under appeal;

(7) Whether, within the last five years, any plan affected by the exemption transaction, or any party in interest involved in the exemption transaction, has been under investigation or examination by, or has been engaged in litigation or a continuing controversy with, the Department, the Internal Revenue Service, the Justice Department, the Pension Benefit Guaranty Corporation, or the Federal Retirement Thrift Investment Board involving compliance with provisions of ERISA, provisions of the Code relating to employee benefit plans, or provisions of FERSA relating to the Federal Thrift Savings Fund. If so, the applicant must provide a brief statement describing the investigation, examination, litigation or controversy. The Department reserves the right to require the production of additional information or documentation concerning any of the above matters. In this regard, a denial of the exemption application will result from a failure to provide additional information requested by the Department.

(8) Whether any plan affected by the requested exemption has experienced a reportable event under section 4043 of ERISA, and, if so, a description of the circumstances of any such reportable event;

(9) Whether a notice of intent to terminate has been filed under section 4041 of ERISA respecting any plan affected by the requested exemption, and, if so, a description of the circumstances for the issuance of such notice;

(10) Names, addresses, and taxpayer identifying numbers of all parties in interest involved in the subject transaction;

(11) The estimated number of participants and beneficiaries in each plan affected by the requested exemption as of the date of the application;

(12) The percentage of the fair market value of the total assets of each affected

plan that is involved in the exemption transaction;

(13) Whether the exemption transaction has been consummated or will be consummated only if the exemption is granted;

(14) If the exemption transaction has already been consummated:

(i) The circumstances which resulted in plan fiduciaries causing the plan(s) to engage in the transaction before obtaining an exemption from the Department;

(ii) Whether the transaction has been terminated;

(iii) Whether the transaction has been corrected as defined in Code section 4975(f)(5);

(iv) Whether Form 5330, Return of Excise Taxes Related to Employee Benefit Plans, has been filed with the Internal Revenue Service with respect to the transaction; and

(v) Whether any excise taxes due under section 4975(a) and (b) of the Code, or any civil penalties due under section 502(i) or (l) of ERISA by reason of the transaction have been paid. If so, the applicant should submit documentation (*e.g.,* a canceled check) demonstrating that the excise taxes or civil penalties were paid.

(15) The name of every person who has investment discretion over any plan assets involved in the exemption transaction and the relationship of each such person to the parties in interest involved in the exemption transaction and the affiliates of such parties in interest;

(16) Whether or not the assets of the affected plan(s) are invested in loans to any party in interest involved in the exemption transaction, in property leased to any such party in interest, or in securities issued by any such party in interest, and, if such investments exist, a statement for each of these three types of investments which indicates:

(i) The type of investment to which the statement pertains;

(ii) The aggregate fair market value of all investments of this type as reflected in the plan's most recent annual report;

(iii) The approximate percentage of the fair market value of the plan's total assets as shown in such annual report that is represented by all investments of this type; and

(iv) The statutory or administrative exemption covering these investments, if any.

(17) The approximate aggregate fair market value of the total assets of each affected plan;

(18) The person(s) who will bear the costs of the exemption application and of notifying interested persons; and

(19) Whether an independent fiduciary is or will be involved in the exemption transaction and, if so, the names of the persons who will bear the cost of the fee payable to such fiduciary.

(b) Each application for an individual exemption must also include:

(1) True copies of all contracts, deeds, agreements, and instruments, as well as relevant portions of plan documents, trust agreements, and any other documents bearing on the exemption transaction;

(2) A discussion of the facts relevant to the exemption transaction that are reflected in these documents and an analysis of their bearing on the requested exemption;

(3) A copy of the most recent financial statements of each plan affected by the requested exemption; and

(4) A net worth statement with respect to any party in interest that is providing a personal guarantee with respect to the exemption transaction.

(c) Special rule for applications for individual exemption involving pooled funds:

(1) The information required by paragraphs (a)(8) through (12) of this section is not required to be furnished in an application for individual exemption involving one or more pooled funds;

(2) The information required by paragraphs (a)(1) through (7) and (a)(13) through (19) of this section and by paragraphs (b)(1) through (3) of this section must be furnished in reference to the pooled fund, rather than to the plans participating therein. (For purposes of this paragraph, the information required by paragraph (a)(16) of this section relates solely to other pooled fund transactions with, and investments in, parties in interest involved in the exemption transaction which are also sponsors of plans which invest in the pooled fund.);

(3) The following information must also be furnished—

(i) The estimated number of plans that are participating (or will participate) in the pooled fund; and

(ii) The minimum and maximum limits imposed by the pooled fund (if any) on the portion of the total assets of each plan that may be invested in the pooled fund.

(4) Additional requirements for applications for individual exemption involving pooled funds in which certain plans participate.

(i) This paragraph applies to any application for an individual exemption involving one or more pooled funds in which any plan participating therein—

(A) Invests an amount which exceeds 20% of the total assets of the pooled fund, or

(B) Covers employees of:

(*1*) The party sponsoring or maintaining the pooled fund, or any affiliate of such party, or

(*2*) Any fiduciary with investment discretion over the pooled fund's assets, or any affiliate of such fiduciary.

(ii) The exemption application must include, with respect to each plan described in paragraph (c)(4)(i) of this section, the information required by paragraphs (a)(1) through (3), (a)(5) through (7), (a)(10), (a)(12) through (16), and (a)(18) and (19), of this section. The information required by this paragraph must be furnished in reference to the plan's investment in the pooled fund (*e.g.,* the names, addresses and taxpayer identifying numbers of all fiduciaries responsible for the plan's investment in the pooled fund (§ 2570.35(a) (10)), the percentage of the assets of the plan invested in the pooled fund (§ 2570.35(a)(12)), whether the plan's investment in the pooled fund has been consummated or will be consummated only if the exemption is granted (§ 2570.35(a)(13)), etc.).

(iii) The information required by paragraph (c)(4) of this section is in addition to the information required by paragraphs (c)(2) and (3) of this section relating to information furnished by reference to the pooled fund.

(5) The special rule and the additional requirements described in paragraphs (c)(1) through (4) of this section do not apply to an individual exemption request solely for the investment by a plan in a pooled fund. Such an application must provide the information required by paragraphs (a) and (b) of this section.

(d) Retroactive exemptions:

(1) Generally, the Department will favorably consider requests for retroactive relief, in all exemption applications, only where the safeguards necessary for the grant of a prospective exemption were in place at the time at which the parties entered into the transaction. An applicant for a retroactive exemption must have acted in good faith by taking reasonable and appropriate steps to protect the plan from abuse and unnecessary risk at the time of the transaction.

(2) Among the factors that the Department would take into account in making a finding that an applicant acted in good faith include the following:

(i) The participation of an independent fiduciary acting on behalf of the plan who is qualified to negotiate, approve and monitor the transaction;

(ii) The existence of a contemporaneous appraisal by a qualified independent appraiser or reference to an objective third party source, such as a stock or bond index;

(iii) The existence of a bidding process or evidence of comparable fair market transactions with unrelated third parties;

(iv) That the applicant has submitted an accurate and complete application for exemption containing documentation of all necessary and relevant facts and representations upon which the applicant relied. In this regard, additional weight will be given to facts and representations which are prepared and certified by a source independent of the applicant;

(v) That the applicant has submitted evidence that the plan fiduciary did not engage in an act or transaction knowing that such act or transaction was prohibited under section 406 of ERISA and/or section 4975 of the Code. In this regard, the Department will accord appropriate weight to the submission of a contemporaneous, reasoned legal opinion of counsel, upon which the plan fiduciary relied in good faith before entering the act or transaction;

(vi) That the applicant has submitted a statement of the circumstances which prompted the submission of the application for exemption and the steps taken by the applicant with regard to the transaction upon discovery of the violation;

(vii) That the applicant has submitted a statement, prepared and certified by an independent person familiar with the types of transactions for which relief is requested, demonstrating that the terms and conditions of the transaction (including, in the case of an investment, the return in fact realized by the plan) were at least as favorable to the plan as that obtainable in a similar transaction with an unrelated party; and

(viii) Such other undertakings and assurances with respect to the plan and its participants that may be offered by the applicant which are relevant to the criteria under section 408(a) of ERISA and section 4975(c)(2) of the Code.

(3) The Department, as a general matter, will not favorably consider requests for retroactive exemptions where transactions or conduct with respect to which an exemption is requested resulted in a loss to the plan. In addition, the Department will not favorably consider requests for exemptions where the transactions are inconsistent with the general fiduciary responsibility provisions of sections 403 or 404 of ERISA or the exclusive benefit requirements of section 401(a) of the Code.

§ 2570.36 Where to file an application.

The Department's prohibited transaction exemption program is administered by the Employee Benefits Security Administration (EBSA). Any exemption application governed by these procedures may be mailed via first-class mail to: Employee Benefits Security Administration, Office of Exemption Determinations, U.S. Department of Labor, Room N–5700, 200 Constitution Avenue NW., Washington, DC 20210. Alternatively, applications may be emailed to the Department at *e-OED@dol.gov* or transmitted via facsimile at (202) 219–0204. Notwithstanding the foregoing methods of transmission, applicants are also required to submit one paper copy of the exemption application for the Department's file.

§ 2570.37 Duty to amend and supplement exemption applications.

(a) While an exemption application is pending final action with the Department, an applicant must promptly notify the Department in writing if he or she discovers that any material fact or representation contained in the application or in any documents or testimony provided in support of the application is inaccurate, if any such fact or representation changes during this period, or if, during the pendency of the application, anything occurs that may affect the continuing accuracy of any such fact or representation. In addition, an applicant must promptly notify the Department in writing if it learns that a material fact or representation has been omitted from the exemption application.

(b) If, at any time during the pendency of an exemption application, the applicant or any other party in interest who would participate in the exemption transaction becomes the subject of an investigation or enforcement action by the Department, the Internal Revenue Service, the Justice Department, the Pension Benefit Guaranty Corporation, or the Federal Retirement Thrift Investment Board involving compliance with provisions of ERISA, provisions of the Code relating to employee benefit plans, or provisions of FERSA relating to the Federal Thrift Savings Fund, the applicant must promptly notify the Department.

(c) The Department may require an applicant to provide documentation it considers necessary to verify any statements contained in the application or in supporting materials or documents.

§ 2570.38 Tentative denial letters.

(a) If, after reviewing an exemption file, the Department tentatively concludes that it will not propose or grant the exemption, it will notify the applicant in writing. At the same time, the Department will provide a brief statement of the reasons for its tentative denial.

(b) An applicant will have 20 days from the date of a tentative denial letter to request a conference under § 2570.40 of this subpart and/or to notify the Department of its intent to submit additional information under § 2570.39 of this subpart. If the Department does not receive a request for a conference or a notification of intent to submit additional information within that time, it will issue a final denial letter pursuant to § 2570.41.

(c) The Department need not issue a tentative denial letter to an applicant before issuing a final denial letter where the Department has conducted a hearing on the exemption pursuant to either § 2570.46 or § 2570.47.

§ 2570.39 Opportunities to submit additional information.

(a) An applicant may notify the Department of its intent to submit additional information supporting an exemption application either by telephone or by letter sent to the address furnished in the applicant's tentative denial letter, or electronically to the email address provided in the tentative denial letter. At the same time, the applicant should indicate generally the type of information that will be submitted.

(b) The additional information an applicant intends to provide in support of the application must be in writing and be received by the Department within 40 days from the date of the tentative denial letter. All such information must be accompanied by a declaration under penalty of perjury attesting to the truth and correctness of the information provided, which is dated and signed by a person qualified under § 2570.34(b)(5) of this subpart to sign such a declaration.

(c) If, for reasons beyond its control, an applicant is unable to submit all the additional information he or she intends to provide in support of his application within the 40-day period described in paragraph (b) of this section, he or she may request an extension of time to furnish the information. Such requests must be made before the expiration of the 40-day period and will be granted only in unusual circumstances and for a limited period as determined, respectively, by the Department in its sole discretion.

(d) If an applicant is unable to submit all of the additional information he or she intends to provide within the 40-day period specified in paragraph (b) of this section, or within any additional period granted pursuant to paragraph (c)

of this section, the applicant may withdraw the exemption application before expiration of the applicable time period and reinstate it later pursuant to § 2570.44.

(e) The Department will issue, without further notice, a final denial letter denying the requested exemption pursuant to § 2570.41 where—

(1) The Department has not received the additional information that the applicant stated his or her intention to submit within the 40-day period described in paragraph (b) of this section, or within any additional period granted pursuant to paragraph (c) of this section;

(2) The applicant did not request a conference pursuant to § 2570.38(b) of this subpart; and

(3) The applicant has not withdrawn the application as permitted by paragraph (d) of this section.

§ 2570.40 Conferences.

(a) Any conference between the Department and an applicant pertaining to a requested exemption will be held in Washington, DC, except that a telephone conference will be held at the applicant's request.

(b) An applicant is entitled to only one conference with respect to any exemption application. An applicant will not be entitled to a conference, however, where the Department has held a hearing on the exemption under either § 2570.46 or § 2570.47 of this subpart.

(c) Insofar as possible, conferences will be scheduled as joint conferences with all applicants present where:

(1) More than one applicant has requested an exemption with respect to the same or similar types of transactions;

(2) The Department is considering the applications together as a request for a class exemption;

(3) The Department contemplates not granting the exemption; and

(4) More than one applicant has requested a conference.

(d) In instances where the applicant has requested a conference pursuant to § 2570.38(b) and also has submitted additional information pursuant to § 2570.39, the Department will schedule a conference under this section for a date and time that occurs within 20 days after the date on which the Department has provided either oral or written notification to the applicant that, after reviewing the additional information, it is still not prepared to propose the requested exemption. If, for reasons beyond its control, the applicant cannot attend a conference within the 20-day limit described in this paragraph, the applicant may request an extension of time for the scheduling of a conference, provided that such request is made before the expiration of the 20-day limit. The Department will only grant such an extension in unusual circumstances and for a brief period as determined, respectively, by the Department in its sole discretion.

(e) In instances where the applicant has requested a conference pursuant to § 2570.38(b) but has not expressed an intent to submit additional information in support of the exemption application as provided in § 2570.39, the Department will schedule a conference under this section for a date and time that occurs within 40 days after the date of the issuance of the tentative denial letter described in § 2570.38(a). If, for reasons beyond its control, the applicant cannot attend a conference within the 40-day limit described in this paragraph, the applicant may request an extension of time for the scheduling of a conference, provided that such request is made before the expiration of the 40-day limit. The Department will only grant such an extension in unusual circumstances and for a brief period as determined, respectively, by the Department in its sole discretion.

(f) In instances where the applicant has requested a conference pursuant to § 2570.38(b) of this subpart, has notified the Department of its intent to submit additional information pursuant to § 2570.39, and has failed to furnish such information within 40 days from the date of the tentative denial letter, the Department will schedule a conference under this section for a date and time that occurs within 60 days after the date of the issuance of the tentative denial letter described in § 2570.38(a). If, for reasons beyond its control, the applicant cannot attend a conference within the 60-day limit described in this paragraph, the applicant may request an extension of time for the scheduling of a conference, provided that such request is made before the expiration of the 60-day limit. The Department will only grant such an extension in unusual circumstances and for a brief period as determined, respectively, by the Department in its sole discretion.

(g) If the applicant fails to either timely schedule or appear for a conference agreed to by the Department pursuant to this section, the applicant will be deemed to have waived its right to a conference.

(h) Within 20 days after the date of any conference held under this section, the applicant may submit to the Department (electronically or in paper form) any additional written data, arguments, or precedents discussed at the conference but not previously or adequately presented in writing. If, for reasons beyond its control, the applicant is unable to submit the additional information within this 20-day limit, the applicant may request an extension of time to furnish the information, provided that such request is made before the expiration of the 20-day limit described in this paragraph. The Department will only grant such an extension in unusual circumstances and for a brief period as determined, respectively, by the Department in its sole discretion.

§ 2570.41 Final denial letters.

The Department will issue a final denial letter denying a requested exemption where:

(a) The conditions for issuing a final denial letter specified in § 2570.38(b) or § 2570.39(e) of this subpart are satisfied;

(b) After issuing a tentative denial letter under § 2570.38 of this subpart and considering the entire record in the case, including all written information submitted pursuant to §§ 2570.39 and 2570.40 of this subpart, the Department decides not to propose an exemption or to withdraw an exemption already proposed; or

(c) After proposing an exemption and conducting a hearing on the exemption under either § 2570.46 or § 2570.47 of this subpart and after considering the entire record in the case, including the record of the hearing, the Department decides to withdraw the proposed exemption.

§ 2570.42 Notice of proposed exemption.

If the Department tentatively decides that an administrative exemption is warranted, it will publish a notice of a proposed exemption in the **Federal Register**. In addition to providing notice of the pendency of the exemption before the Department, the notice will:

(a) Explain the exemption transaction and summarize the information and reasons in support of proposing the exemption;

(b) Describe the scope of relief and any conditions of the proposed exemption;

(c) Inform interested persons of their right to submit comments to the Department (either electronically or in writing) relating to the proposed exemption and establish a deadline for receipt of such comments; and

(d) Where the proposed exemption includes relief from the prohibitions of section 406(b) of ERISA, section 4975(c)(1)(E) or (F) of the Code, or section 8477(c)(2) of FERSA, inform interested persons of their right to request a hearing under § 2570.46 of this

subpart and establish a deadline for receipt of requests for such hearings.

§ 2570.43 Notification of interested persons by applicant.

(a) If a notice of proposed exemption is published in the **Federal Register** in accordance with § 2570.42 of this subpart, the applicant must notify interested persons of the pendency of the exemption in the manner and within the time period specified in the application. If the Department determines that this notification would be inadequate, the applicant must obtain the Department's consent as to the manner and time period of providing the notice to interested persons. Any such notification must include:

(1) A copy of the notice of proposed exemption as published in the **Federal Register**; and

(2) A supplemental statement in the following form:

You are hereby notified that the United States Department of Labor is considering granting an exemption from the prohibited transaction restrictions of the Employee Retirement Income Security Act of 1974, the Internal Revenue Code of 1986, or the Federal Employees' Retirement System Act of 1986. The exemption under consideration is summarized in the enclosed [Summary of Proposed Exemption, and described in greater detail in the accompanying] [2] Notice of Proposed Exemption. As a person who may be affected by this exemption, you have the right to comment on the proposed exemption by [date].[3] [If you may be adversely affected by the grant of the exemption, you also have the right to request a hearing on the exemption by [date].] [4]

All comments and/or requests for a hearing should be addressed to the Office of Exemption Determinations, Employee Benefits Security Administration, Room ___,[5] U.S. Department of Labor, 200 Constitution Avenue NW., Washington, DC 20210, ATTENTION: Application No.___.[6] Comments and hearing requests may also be transmitted to the Department electronically at *e-oed@dol.gov* or at *http://www.regulations.gov* (follow instructions for submission), and should prominently reference the application number listed above. In addition, comments and hearing requests may be transmitted to the Department via facsimile at (202) 219–0204. Individuals submitting comments or requests for a hearing on this matter are advised not to disclose sensitive personal data, such as social security numbers.

The Department will make no final decision on the proposed exemption until it reviews the comments received in response to the enclosed notice. If the Department decides to hold a hearing on the exemption request before making its final decision, you will be notified of the time and place of the hearing.

(b) The method used by an applicant to furnish notice to interested persons must be reasonably calculated to ensure that interested persons actually receive the notice. In all cases, personal delivery and delivery by first-class mail will be considered reasonable methods of furnishing notice. If the applicant elects to furnish notice electronically, he or she must provide satisfactory proof of electronic delivery to the entire class of interested persons.

(c) After furnishing the notification described in paragraph (a) of this section, an applicant must provide the Department with a written statement confirming that notice was furnished in accordance with the foregoing requirements of this section. This statement must be accompanied by a declaration under penalty of perjury attesting to the truth of the information provided in the statement and signed by a person qualified under § 2570.34(b)(5) of this subpart to sign such a declaration. No exemption will be granted until such a statement and its accompanying declaration have been furnished to the Department.

(d) In addition to the provision of notification required by paragraph (a) of this section, the Department, in its discretion, may also require an applicant to furnish interested persons with a brief summary of the proposed exemption (Summary of Proposed Exemption), written in a manner calculated to be understood by the average recipient, which objectively describes:

(1) The exemption transaction and the parties in interest thereto;

(2) Why such transaction would violate the prohibited transaction provisions of ERISA, the Code, and/or FERSA from which relief is sought;

(3) The reasons why the plan seeks to engage in the transaction; and

(4) The conditions and safeguards proposed to protect the plan and its participants and beneficiaries from potential abuse or unnecessary risk of loss in the event the Department grants the exemption.

(e) Applicants who are required to provide interested persons with the Summary of Proposed Exemption described in paragraph (d) of this section shall furnish the Department with a copy of such summary for review and approval prior to its distribution to interested persons. Such applicants shall also provide confirmation to the Department that the Summary of Proposed Exemption was furnished to interested persons as part of the written statement and declaration required of exemption applicants by paragraph (c) of this section.

§ 2570.44 Withdrawal of exemption applications.

(a) An applicant may withdraw an application for an exemption at any time by oral or written (including electronic) notice to the Department. A withdrawn application generally shall not prejudice any subsequent applications for an exemption submitted by an applicant.

(b) Upon receiving an applicant's notice of withdrawal regarding an application for an individual exemption, the Department will confirm by letter the applicant's withdrawal of the application and will terminate all proceedings relating to the application. If a notice of proposed exemption has been published in the **Federal Register**, the Department will publish a notice withdrawing the proposed exemption.

(c) Upon receiving an applicant's notice of withdrawal regarding an application for a class exemption or for an individual exemption that is being considered with other applications as a request for a class exemption, the Department will inform any other applicants for the exemption of the withdrawal. The Department will continue to process other applications for the same exemption. If all applicants for a particular class exemption withdraw their applications, the Department may either terminate all proceedings relating to the exemption or propose the exemption on its own motion.

(d) If, following the withdrawal of an exemption application, an applicant decides to reapply for the same exemption, he or she may contact the Department in writing (including electronically) to request that the application be reinstated. The applicant should refer to the application number assigned to the original application. If, at the time the original application was withdrawn, any additional information to be submitted to the Department under § 2570.39 was outstanding, that information must accompany the request for reinstatement of the

[2] To be added in instances where the Department requires the applicant to furnish a Summary of Proposed Exemption to interested persons as described in § 2570.43(d).

[3] The applicant will write in this space the date of the last day of the time period specified in the notice of proposed exemption.

[4] To be added in the case of an exemption that provides relief from section 406(b) of ERISA or corresponding sections of the Code or FERSA.

[5] The applicant will fill in the room number of the Office of Exemptions Determinations. As of the date of this final regulation, the room number of the Office of Exemption Determinations is N–5700.

[6] The applicant will fill in the exemption application number, which is stated in the notice of proposed exemption, as well as in all correspondence from the Department to the applicant regarding the application.

application. However, the applicant need not resubmit information previously furnished to the Department in connection with a withdrawn application unless reinstatement of the application is requested more than two years after the date of its withdrawal.

(e) Any request for reinstatement of a withdrawn application submitted, in accordance with paragraph (d) of this section, will be granted by the Department, and the Department will take whatever steps remained at the time the application was withdrawn to process the application.

§ 2570.45 Requests for reconsideration.

(a) The Department will entertain one request for reconsideration of an exemption application that has been finally denied pursuant to § 2570.41 if the applicant presents in support of the application significant new facts or arguments, which, for good reason, could not have been submitted for the Department's consideration during its initial review of the exemption application.

(b) A request for reconsideration of a previously denied application must be made within 180 days after the issuance of the final denial letter and must be accompanied by a copy of the Department's final letter denying the exemption and a statement setting forth the new information and/or arguments that provide the basis for reconsideration.

(c) A request for reconsideration must also be accompanied by a declaration under penalty of perjury attesting to the truth of the new information provided, which is signed by a person qualified under § 2570.34(b)(5) to sign such a declaration.

(d) If, after reviewing a request for reconsideration, the Department decides that the facts and arguments presented do not warrant reversal of its original decision to deny the exemption, it will send a letter to the applicant reaffirming that decision.

(e) If, after reviewing a request for reconsideration, the Department decides, based on the new facts and arguments submitted, to reconsider its final denial letter, it will notify the applicant of its intent to reconsider the application in light of the new information presented. The Department will then take whatever steps remained at the time it issued its final denial letter to process the exemption application.

(f) If, at any point during its subsequent processing of the application, the Department decides again that the exemption is unwarranted, it will issue a letter affirming its final denial.

§ 2570.46 Hearings in opposition to exemptions from restrictions on fiduciary self-dealing.

(a) Any interested person who may be adversely affected by an exemption which the Department proposes to grant from the restrictions of section 406(b) of ERISA, section 4975(c)(1)(E) or (F) of the Code, or section 8477(c)(2) of FERSA may request a hearing before the Department within the period of time specified in the **Federal Register** notice of the proposed exemption. Any such request must state:

(1) The name, address, telephone number, and email address of the person making the request;

(2) The nature of the person's interest in the exemption and the manner in which the person would be adversely affected by the exemption; and

(3) A statement of the issues to be addressed and a general description of the evidence to be presented at the hearing.

(b) The Department will grant a request for a hearing made in accordance with paragraph (a) of this section where a hearing is necessary to fully explore material factual issues identified by the person requesting the hearing. A notice of such hearing shall be published by the Department in the **Federal Register**. The Department may decline to hold a hearing where:

(1) The request for the hearing does not meet the requirements of paragraph (a) of this section;

(2) The only issues identified for exploration at the hearing are matters of law; or

(3) The factual issues identified can be fully explored through the submission of evidence in written (including electronic) form.

(c) An applicant for an exemption must notify interested persons in the event that the Department schedules a hearing on the exemption. Such notification must be given in the form, time, and manner prescribed by the Department. Ordinarily, however, adequate notification can be given by providing to interested persons a copy of the notice of hearing published by the Department in the **Federal Register** within 10 days of its publication, using any of the methods approved in § 2570.43(b).

(d) After furnishing the notice required by paragraph (c) of this section, an applicant must submit a statement confirming that notice was given in the form, manner, and time prescribed. This statement must be accompanied by a declaration under penalty of perjury attesting to the truth of the information provided in the statement, which is signed by a person qualified under § 2570.34(b)(5) to sign such a declaration.

§ 2570.47 Other hearings.

(a) In its discretion, the Department may schedule a hearing on its own motion where it determines that issues relevant to the exemption can be most fully or expeditiously explored at a hearing. A notice of such hearing shall be published by the Department in the **Federal Register**.

(b) An applicant for an exemption must notify interested persons of any hearing on an exemption scheduled by the Department in the manner described in § 2570.46(c). In addition, the applicant must submit a statement subscribed as true under penalty of perjury like that required in § 2570.46(d).

§ 2570.48 Decision to grant exemptions.

(a) The Department may not grant an exemption under section 408(a) of ERISA, section 4975(c)(2) of the Code, or 5 U.S.C. 8477(c)(3) unless, following evaluation of the facts and representations comprising the administrative record of the proposed exemption (including any comments received in response to a notice of proposed exemption and the record of any hearing held in connection with the proposed exemption), it finds that the exemption is:

(1) Administratively feasible;

(2) In the interests of the plan (or the Thrift Savings Fund in the case of FERSA) and of its participants and beneficiaries; and

(3) Protective of the rights of participants and beneficiaries of such plan (or the Thrift Savings Fund in the case of FERSA).

(b) In each instance where the Department determines to grant an exemption, it shall publish a notice in the **Federal Register** which summarizes the transaction or transactions for which exemptive relief has been granted and specifies the conditions under which such exemptive relief is available.

§ 2570.49 Limits on the effect of exemptions.

(a) An exemption does not take effect with respect to the exemption transaction unless the material facts and representations contained in the application and in any materials and documents submitted in support of the application were true and complete.

(b) An exemption is effective only for the period of time specified and only under the conditions set forth in the exemption.

(c) Only the specific parties to whom an exemption grants relief may rely on

the exemption. If the notice granting an exemption does not limit exemptive relief to specific parties, all parties to the exemption transaction may rely on the exemption.

(d) For transactions that are continuing in nature, an exemption ceases to be effective if, during the continuation of the transaction, there are material changes to the original facts and representations underlying such exemption or if one or more of the exemption's conditions cease to be met.

(e) The determination as to whether, under the totality of the facts and circumstances, a particular statement contained in (or omitted from) an exemption application constitutes a material fact or representation is made by the Department.

§ 2570.50 Revocation or modification of exemptions.

(a) If, after an exemption takes effect, changes in circumstances, including changes in law or policy, occur which call into question the continuing validity of the Department's original findings concerning the exemption, the Department may take steps to revoke or modify the exemption.

(b) Before revoking or modifying an exemption, the Department will publish a notice of its proposed action in the **Federal Register** and provide interested persons with an opportunity to comment on the proposed revocation or modification. Prior to the publication of such notice, the applicant will be notified of the Department's proposed action and the reasons therefore. Subsequent to the publication of the notice, the applicant will have the opportunity to comment on the proposed revocation or modification.

(c) Ordinarily the revocation or modification of an exemption will have prospective effect only.

§ 2570.51 Public inspection and copies.

(a) The administrative record of each exemption will be open to public inspection and copying at the EBSA Public Disclosure Room, U.S. Department of Labor, 200 Constitution Avenue NW., Washington, DC 20210.

(b) Upon request, the staff of the Public Disclosure Room will furnish photocopies of an administrative record, or any specified portion of that record, for a specified charge per page.

§ 2570.52 Effective date.

This subpart B is effective with respect to all exemptions filed with or initiated by the Department under section 408(a) of ERISA, section 4975(c)(2) of the Code, and/or 5 U.S.C. 8477(c)(3) at any time on or after December 27, 2011. Applications for exemptions under section 408(a) of ERISA, section 4975(c)(2) of the Code, and/or 5 U.S.C. 8477(c)(3) filed on or after September 10, 1990, but before December 27, 2011 are governed by part 2570 of chapter XXV of title 29 of the Code of Federal Regulations (title 29 CFR part 2570 as revised July 1, 1991).

* * * * *

Signed at Washington, DC, this 18th day of October, 2011.

Phyllis C. Borzi,

Assistant Secretary, Employee Benefits Security Administration, Department of Labor.

[FR Doc. 2011–27312 Filed 10–26–11; 8:45 am]

BILLING CODE 4510–29–P

DEPARTMENT OF COMMERCE

National Oceanic and Atmospheric Administration

50 CFR Part 648

[Docket No. 0907301205–0289–02]

RIN 0648- XA764

Fisheries of the Northeastern United States; Atlantic Herring Fishery; Sub-ACL (Annual Catch Limit) Harvested for Management Area 1A

AGENCY: National Marine Fisheries Service (NMFS), National Oceanic and Atmospheric Administration (NOAA), Commerce.

ACTION: Temporary rule; closure.

SUMMARY: NMFS is closing the directed herring fishery in management area 1A, because 95 percent of the catch limit for that area has been caught. Effective 0001 hr, October 27, 2011, federally permitted vessels may not fish for, catch, possess, transfer, or land more than 2,000 lb (907.2 kg) of Atlantic herring (herring) in or from Management Area 1A (Area 1A) per calendar day until January 1, 2012, when the 2012 allocation for Area 1A becomes available.

DATES: Effective 0001 hr local time, October 27, 2011, through December 31, 2011.

FOR FURTHER INFORMATION CONTACT: Lindsey Feldman, Fishery Management Specialist, (978) 675–2179.

SUPPLEMENTARY INFORMATION: Regulations governing the herring fishery are found at 50 CFR part 648. The regulations require annual specification of the overfishing limit, acceptable biological catch, annual catch limit (ACL), optimum yield, domestic harvest and processing, U.S. at-sea processing, border transfer, and sub-ACLs for each management area. The 2011 Domestic Annual Harvest is 91,200 metric tons (mt); the 2011 sub-ACL allocated to Area 1A is 26,546 mt, and 0 mt of the sub-ACL is set aside for research (75 FR 48874, August 12, 2010).

Section § 648.201 requires the Administrator, Northeast Region, NMFS (Regional Administrator), to monitor the herring fishery in each of the four management areas designated in the Fishery Management Plan for the herring fishery and, based on dealer reports, state data, and other available information, to determine when the harvest of herring is projected to reach 95 percent of the management area sub-ACL. When such a determination is made, NMFS must publish notification in the **Federal Register** and prohibit herring vessel permit holders from fishing for, catching, possessing, transferring, or landing more than 2,000 lb (907.2 kg) of herring per calendar day in or from the specified management area for the remainder of the closure period. Transiting of Area 1A with more than 2,000 lb (907.2 kg) of herring on board is allowed under the conditions described below.

The Regional Administrator has determined, based upon dealer reports and other available information that 95 percent of the total herring sub-ACL allocated to Area 1A for 2011 is projected to be harvested. This projection takes into consideration an additional 3,000 mt that will be allocated to Area 1A, effective November 1, 2011 from an under-harvest in the New Brunswick weir fishery. Therefore, effective 0001 hr local time, October 27, 2011, federally permitted vessels may not fish for, catch, possess, transfer, or land more than 2,000 lb (907.2 kg) of herring in or from Area 1A per calendar day through December 31, 2011. Vessels may transit through Area 1A with more than 2,000 lb (907.2 kg) of herring on board, provided such herring was not caught in Area 1A and provided all fishing gear aboard is stowed and not available for immediate use as required by § 648.23(b). Effective 0001 hr, October 27, 2011, federally permitted dealers are also advised that they may not purchase herring from federally permitted herring vessels that harvest more than 2,000 lb (907.2 kg) of herring from Area 1A through 2400 hr local time, December 31, 2011.

Classification

This action is required by 50 CFR part 648 and is exempt from review under Executive Order 12866.

NMFS finds good cause pursuant to 5 U.S.C. 553(b)(B) to waive prior notice and the opportunity for public comment because it would be contrary to the public interest. This action closes the herring fishery for Management Area 1A until January 1, 2012, under current regulations. The regulations at § 648.201(a) require such action to ensure that herring vessels do not exceed the 2011 sub-ACL allocated to Area 1A. The herring fishery opened for the 2011 fishing year on January 1, 2011. Data indicating the herring fleet will have landed at least 95 percent of the 2011 sub-ACL allocated to Area 1A have only recently become available. If implementation of this closure is delayed to solicit prior public comment, the sub-ACL for Area 1A for this fishing year can be exceeded, thereby undermining the conservation objectives of the FMP. NMFS further finds, pursuant to 5 U.S.C 553(d)(3), good cause to waive the 30-day delayed effectiveness period for the reasons stated above.

Authority: 16 U.S.C. 1801 *et seq.*

Dated: October 24, 2011.

Steven Thur,

Acting Director, Office of Sustainable Fisheries, National Marine Fisheries Service.

[FR Doc. 2011–27841 Filed 10–25–11; 8:45 am]

BILLING CODE 3510–22–P

DEPARTMENT OF COMMERCE

National Oceanic and Atmospheric Administration

50 CFR Part 679

[Docket No. 101126521–0640–02]

RIN 0648–XA794

Fisheries of the Exclusive Economic Zone Off Alaska; Pacific Cod and Octopus in the Bering Sea and Aleutian Islands Management Area

AGENCY: National Marine Fisheries Service (NMFS), National Oceanic and Atmospheric Administration (NOAA), Commerce.

ACTION: Temporary rule; closure.

SUMMARY: NMFS is prohibiting directed fishing for Pacific cod by vessels using pot gear in the Bering Sea and Aleutian Islands management area (BSAI). This action is necessary to limit incidental catch of octopus by vessels using pot gear to fish for Pacific cod the BSAI.

DATES: Effective 1200 hrs, Alaska local time (A.l.t.), October 24, 2011, through 2400 hrs, A.l.t., December 31, 2011.

FOR FURTHER INFORMATION CONTACT: Josh Keaton, 907–586–7228.

SUPPLEMENTARY INFORMATION: NMFS manages the groundfish fishery in the BSAI exclusive economic zone according to the Fishery Management Plan for Groundfish of the Bering Sea and Aleutian Islands Management Area (FMP) prepared by the North Pacific Fishery Management Council under authority of the Magnuson-Stevens Fishery Conservation and Management Act. Regulations governing fishing by U.S. vessels in accordance with the FMP appear at subpart H of 50 CFR part 600 and 50 CFR part 679.

The Magnuson-Stevens Fishery Conservation and Management Act requires that conservation and management measures prevent overfishing. The 2011 octopus overfishing level in the BSAI is 528 metric tons (mt) and the acceptable biological catch (ABC) is 396 mt as established by the final 2011 and 2012 harvest specifications for groundfish in the BSAI (76 FR 11139, March 1, 2011). NMFS closed directed fishing for octopus on January 13, 2011 (76 FR 3044, January 19, 2011) and prohibited retention of octopus on September 1, 2011 (76 FR 55276, September 7, 2011).

As of October 15, 2011, approximately 530 mt of octopus has been harvested in the BSAI. Vessels using pot gear have significant incidental catch of octopus and have taken the vast majority of octopus in the BSAI. Substantial fishing effort by vessels using pot gear is being directed at remaining amounts of Pacific cod in the BSAI. If vessels using pot gear were allowed to continue fishing for Pacific cod in the BSAI then further incidental catch of octopus would occur.

The Regional Administrator has determined, in accordance with § 679.20(d)(3), that prohibiting directed fishing for Pacific cod by vessels using pot gear in BSAI is necessary to prevent further incidental catch of octopus by the Pacific cod sector.

Classification

This action responds to the best available information recently obtained from the fishery. The Assistant Administrator for Fisheries, NOAA (AA), finds good cause to waive the requirement to provide prior notice and opportunity for public comment pursuant to the authority set forth at 5 U.S.C. 553(b)(B) as such requirement is impracticable and contrary to the public interest. This requirement is impracticable and contrary to the public interest as it would prevent NMFS from responding to the most recent fisheries data in a timely fashion, would delay prohibiting directed fishing for Pacific cod by vessels using pot gear in the BSAI and allow further incidental catch of octopus by the Pacific cod sector. NMFS was unable to publish a notice providing time for public comment because the most recent, relevant data only became available as of October 20, 2011.

The AA also finds good cause to waive the 30-day delay in the effective date of this action under 5 U.S.C. 553(d)(3). This finding is based upon the reasons provided above for waiver of prior notice and opportunity for public comment.

This action is required by § 679.20 and is exempt from review under Executive Order 12866.

Authority: 16 U.S.C. 1801 *et seq.*

Dated: October 24, 2011.

Steven Thur,

Acting Director, Office of Sustainable Fisheries, National Marine Fisheries Service.

[FR Doc. 2011–27848 Filed 10–24–11; 4:15 pm]

BILLING CODE 3510–22–P

Proposed Rules

Federal Register

Vol. 76, No. 208

Thursday, October 27, 2011

This section of the FEDERAL REGISTER contains notices to the public of the proposed issuance of rules and regulations. The purpose of these notices is to give interested persons an opportunity to participate in the rule making prior to the adoption of the final rules.

DEPARTMENT OF AGRICULTURE

Office of Advocacy and Outreach

7 CFR Part 2502

RIN 0503–AA49

Agricultural Career and Employment Grants Program

AGENCY: Office of Advocacy and Outreach, Departmental Management.

ACTION: Proposed rule.

SUMMARY: Section 14204 of the Food, Conservation and Energy Act of 2008 authorizes the Secretary of Agriculture to make grants to assist agricultural employers and farmworkers by improving the supply, stability, safety, and training of the agricultural labor force. Such grants may be made to eligible entities for use in providing services to assist farmworkers who are citizens or otherwise legally present in the United States in securing, retaining, upgrading, or returning from agricultural jobs. The Agriculture, Rural Development, Food and Drug Administration and Related Agencies Appropriations Act, 2010 (2010 Appropriations Act), included an appropriation of $4 million to the U.S. Department of Agriculture's (USDA) Rural Housing Service (RHS) for this program. The delegation of authority and funding for the program has since been transferred to the Office of Advocacy and Outreach (OAO), within Departmental Management of USDA. The purpose of this rulemaking is to establish regulations governing the grants program, including eligibility, application for, evaluation, award and post-award administration of grants made pursuant to the authority granted to the Secretary under Section 14204.

DATES: Comments on the proposed rule must be received by the agency on or before November 28, 2011 to be assured of consideration. Comments on the collection of information, Paperwork Reduction Act, must be received by the agency on or before December 27, 2011 to be assured of consideration.

ADDRESSES: You may submit comments on the proposed rule, identified by RIN 0503–AA49 by any of the following methods:

Federal e-Rulemaking Portal: http://www.regulations.gov. Follow the instructions for submitting comments.

E-mail: christine.chavez@osec.usda.gov. Include Regulatory Information Number (RIN) number 0503–AA49 in the subject line of the message.

Fax: 202–720–7136.

Mail: Comments may be mailed to the Office of Advocacy and Outreach, U.S. Department of Agriculture, 1400 Independence Avenue, Room 520–A, Stop 9801, Washington DC 20250–9821.

Hand Delivery/Courier: Office of Advocacy and Outreach, U.S. Department of Agriculture, 1400 Independence Avenue, SW., Room 520–A, Washington DC 20250.

Instructions: all submissions received must include the agency name and the RIN for this rulemaking. All comments received will be posted without change to *http://www.regulations.gov,* including any personal information provided.

FOR FURTHER INFORMATION CONTACT: Christine Chavez, Program Leader, Farmworker Coordination, Office of Advocacy and Outreach, U.S. Department of Agriculture, 1400 Independence Avenue, SW., Stop 9801, Washington, DC 20250 Voice: 202–205–4215, *Fax:* 202–720–7136, *E-mail: christine.chavez@osec.usda.gov*

SUPPLEMENTARY INFORMATION:

I. Background and Applicability of Regulations

Authority: Section 14204 of the Food, Conservation and Energy Act of 2008, Public Law 110–246 (June 18, 2008) (2008 Farm Bill), 7 U.S.C.:20089q–1, authorizes the Secretary of Agriculture to make grants to assist agricultural employers and farmworkers by improving the supply, stability, safety, and training of the agricultural labor force. Such grants may be made to eligible entities for use in providing services to assist farmworkers who are citizens or otherwise legally present in the United States in securing, retaining, upgrading, or returning from agricultural jobs. The purpose of this rulemaking is to establish regulations governing the grants program, including eligibility, application for, evaluation, award and post-award administration of grants made pursuant to the authority granted to the Secretary under Section 14204. The Agriculture, Rural Development, Food and Drug Administration and Related Agencies Appropriations Act, 2010, Public Law 111–80, October 21, 2009) (2010 Appropriations Act) included an appropriation of $4 million to the U.S. Department of Agriculture's (USDA) Rural Housing Service (RHS) for this program, and the delegation of authority and funding for the program has since been transferred to the Office of Advocacy and Outreach (OAO), within Departmental Management of USDA. OAO has designated the program the Agricultural Career and Employment (ACE) Grants Program and it will be referred to as such hereafter.

Purpose of the ''ACE'' Grants Program: As the title of Section 14204 of the 2008 Farm Bill suggests—''Grants to Improve the Supply, Stability, Safety, and Training of Agricultural Labor Force''—the grants program authorized by this section is designed to address the needs of both agricultural employers and farmworkers with respect to the supply of skilled labor in American agriculture and the stability of employment in that sector. About 800,000 hired farmworkers are employed in U.S. agriculture, with hired workers making up an estimated one-third of the total agricultural labor force. Particularly critical for labor-intensive sectors of agriculture, such as fruits and vegetables, the hired agricultural labor force in the United States is characterized by considerable instability. Among the hired workforce are large numbers of migrant and seasonal farmworkers, many of whom travel long distances to obtain employment, and often move from crop to crop as conditions warrant. See, A Profile of Hired Farmworkers, A 2008 Update, by William Kandel, U.S. Department of Agriculture, Economic Research Service available at *http://www.ers.usda.gov/Publications/ERR60/err60_reportsummary.pdf.*

Despite this regular flow of workers, regional differences in crops, variations in harvest times, and unpredictable weather conditions mean that many growers complain of chronic labor shortages, while farmworkers frequently report it is difficult to locate

employment or obtain sufficient hours of work to earn a living. Unemployment rates among farmworkers generally are double those of other wage and salaried workers and those working in field crops have twice the unemployment rate of livestock workers. Historically, the uncertainty farmworkers have faced as to the availability or duration of work, along with the low wages generally earned by hired farm laborers, has led to many employed in the agricultural labor sector to leave agriculture for employment in other industries. Because of high turnover rates in agricultural employment, it is estimated that 2.0 to 2.5 individual farmworkers fill each job slot in the course of a year. This phenomenon has lead to chronic instability in the labor market and a shortage of skilled and experienced workers.

The ACE grants program is intended to improve the supply of skilled agricultural workers and bring greater stability to the workforce in this sector. This stability will be realized through services specifically designed to assist farmworkers in securing, retaining, upgrading or returning from an agricultural job. Such services include the following:

- Agricultural labor skills development;
- The provision of agricultural labor market information;
- Transportation;
- Short-term housing while in transit to an agricultural worksite;
- Workplace literacy and assistance with English as a second language;
- Health and safety instruction, including ways of safeguarding the food supply of the United States; and
- Other such services the Secretary deems appropriate.

The training and services offered through the ACE grants program will benefit growers by contributing to the establishment of a more skilled pool of workers. Farmworkers who avail themselves of the training and the other services under the program should have enhanced employment opportunities, with the prospect of obtaining additional hours of work and pay or better paying positions on the farm and expanded promotional opportunities as a result of upgraded skills. Moreover, to the extent greater opportunities exist for farmworkers within the agricultural industry, hired farm laborers will have greater incentives to remain in agriculture and will be less likely to leave farm work for other occupations. Finally, training farmworkers in ways to safeguard the food supply of the United States is intended to benefit not only consumers, but to benefit growers and farmworkers alike by minimizing disruptions in the agricultural sector due to product contamination. Taken together, the listed services and program goals are intended to promote stability in the workforce and thereby improve the supply of skilled labor across U.S. agriculture.

II. Administrative Requirements for the Proposed Rulemaking

A. Executive Orders 12866, 13563, and the Regulatory Flexibility Act

This proposed rule has been determined to be not significant for the purposes of Executive Order 12866 and, therefore, has been reviewed by the Office of Management and Budget. We have prepared an economic analysis for this rule which is summarized below. The economic analysis provides a cost-benefit analysis, as required by Executive Orders 12866 and 13563, and an initial regulatory flexibility analysis that examines the potential economic effects of this proposed rule on small entities, as required by the Regulatory Flexibility Act. Copies of the full analysis are available by contacting the person listed under **FOR FURTHER INFORMATION CONTACT** or on the Regulations.gov Web site (see **ADDRESSES** above for instructions for accessing Regulations.gov). The economic analysis outlines several benefits of this program. The program would provide agricultural employers with access to a more stable and skilled pool of farmworkers and would provide farmworkers with enhanced employment opportunities, such as additional hours of work, better terms and conditions of employment, training, an increase in wages, and more opportunity for advancement. Training farmworkers in ways to safeguard the food supply will benefit not only agricultural employers and farmworkers, but also consumers. The total cost of this program would be $4 million to taxpayers, most of which would be awarded as grants with a 15 percent maximum that could be used to administer the program.

The Initial Regulatory Flexibility Analysis addresses the expected impact of this program on small entities. It is expected that the majority of the entities eligible for grants will be small. However, OAO does not expect this rule to have a significant economic impact on a substantial number of small entities.

C. Paperwork Reduction Act (PRA)

In accordance with section 3507(d) of the Paperwork Reduction Act of 1995 (44 U.S.C. 3501 *et seq.*), the information collection or recordkeeping requirements included in this proposed rule have been submitted for approval to the Office of Management and Budget (OMB). Please send written comments to the Office of Information and Regulatory Affairs, OMB, *Attention:* Desk Officer for Departmental Management, Washington, DC 20503. Please state that your comments refer to Docket No. (Insert docket No.). Please send a copy of your comments to: (1) Christine Chavez, Program Leader, Farmworker Coordination, Office of Advocacy and Outreach, U.S. Department of Agriculture, 1400 Independence Avenue, SW., Stop 9801, Washington, DC 20250, *Fax:* 202–720–7136 *E-mail: christine.chavez@osec.usda.gov.* (2) Clearance Officer, OCIO, USDA, room 404–W, 14th Street and Independence Avenue SW., Washington, DC 20250. A comment to OMB is best assured of having its full effect if OMB receives it within 30 days of publication of this proposed rule.

This proposed rule would allow USDA to make grants to assist agricultural employers and farmworkers by improving the supply, stability, safety, and training of the agricultural labor force.

OAO is asking OMB to approve its use of this information collection activity to ensure that it will maximize the utility of information which is created, collected and maintained and minimize both the burden imposed on entities seeking to participate in the program as well as costs to the federal government.

We are soliciting comments from the public concerning our proposed information collection and recordkeeping requirements. These comments will help us:

(1) Evaluate whether the proposed information collection is necessary for the proper performance of our agency's functions, including whether the information will have practical utility;

(2) Evaluate the accuracy of our estimate of the burden on the proposed information collection, including the validity of the methodology and assumptions used;

(3) Enhance the quality, utility, and clarity of the information to be collected; and

(4) Minimize the burden of the information collection on those who are to respond (such as through the use of appropriate automated, electronic, mechanical, or other technological collection techniques or other forms of information technology; e.g., permitting electronic submission of responses).

Estimate of burden: Public reporting burden for this collection of information

is estimated to average 1 hour per response.

(1) *Respondents:* Not-for-profit institutions or a consortium which includes a non-profit organization(s) and one or more of the following: Agribusinesses, State and local governments, agricultural labor organizations,

Estimated annual number of respondents: 20.

Estimated annual number of responses per respondent: 3 (average).

Estimated annual number of responses: [65].

Estimated total annual burden on respondents: 2 hours (Due to averaging, the total annual burden hours may not equal the product of the annual number of responses multiplied by the reporting burden per response.)

Copies of this information collection can be obtained from Christine Chavez, Program Leader, Farmworker Coordination, Office of Advocacy and Outreach, U.S. Department of Agriculture, 1400 Independence Avenue, SW., Stop 9801, Washington, DC 20250, *E-mail: christine.chavez@osec.usda.gov.*

E-Government Act Compliance

The Office of Advocacy and Outreach is committed to compliance with the E-Government Act to promote the use of the Internet and other information technologies, to provide increased opportunities for citizen access to Government information and services, and for other purposes. For information pertinent to E-Government Act compliance related to this proposed rule, please contact Christine Chavez, Program Leader, Farmworker Coordination, Office of Advocacy and Outreach, U.S. Department of Agriculture, 1400 Independence Avenue, SW., Stop 9801, Washington, DC 20250, *E-mail: christine.chavez@osec.usda.gov.*

D. Catalog of Federal Domestic Assistance

This proposed rule applies to the following Federal assistance program administered by the Office of Advocacy and Outreach: 10.465, Farmworker Training Grants.

E. The National Environmental Policy Act of 1969

The Department concludes that the requirements of the National Environmental Policy Act of 1969, 42 U.S.C. 4321 *et seq* (NEPA) do not apply to this rulemaking because this rule includes no provisions impacting the maintenance, preservation or enhancement of a healthful environment.

F. Federal Regulations and Policies on Families

Pursuant to the requirements of Section 654 of the Treasury and general Government Appropriations Act of 1999, 5 U.S.C. 601 note, the Department concludes this regulation has no potential negative effect on family well-being as defined there under.

G. Executive Order 13045: Protection of Children From Environmental and Safety Risk

The Department concludes that this proposed rule has no negative effect on the health and safety of children.

H. Unfunded Mandates Reform Act of 1995 and Executive Order 13132

Pursuant to Executive Order No. 13132, 64 FR 43225 (August 10, 1999) and the Unfunded Mandates Act of 1995, 2 U.S.C. 1501 *et seq.,* the Department concludes there is no potential or substantial direct effects on the States, on the relationship between the national government and the States, or on the distribution of power and responsibilities among the various levels of government. As there is no Federal mandate contained herein that could result in increased expenditures by State, Local, and tribal governments or by the private sector, the Department has not prepared a budgetary impact statement.

I. Executive Order 13175: Consultation and Coordination With Indian Tribal Governments

In accordance with Executive Order 13175, 65 FR 67249 (Nov. 9, 2000), the Department concludes this rule, as proposed, does not have ''tribal implications'' nor substantial direct effects on one or more Indian tribes, on the relationship between the Federal government and Indian Tribes, or on the distribution of power and responsibilities between the Federal government and Indian tribes.

J. Executive Order 12988: Civil Justice Reform

This proposed rule has been reviewed in accordance with Executive Order 12988, Civil Justice Reform. This rule would not preempt State or local laws, is not intended to have retroactive effect, and would not involve administrative appeals.

K. Executive Order 13132: Federalism

This proposed rule would not have sufficient federalism implications to warrant the preparation of a Federalism Assessment. Provisions of this rule would not have a substantial direct effect on States or their political subdivisions or on the distribution of power and responsibilities among the various government levels.

L. Executive Order 12372: Intergovernmental Review of Federal Programs

For the reasons set forth in the Final Rule Related Notice for 7 CFR part 3015, subpart V (48 FR 29115, June 24, 1983), this program is excluded from the scope of the Executive Order 12372, which requires intergovernmental consultation with State and local officials. This program does not directly affect State and local governments.

List of Subjects in 7 CFR Part 2502

Agricultural labor, Agricultural employers, Grants, Farmworkers, Training.

For the reasons discussed in the preamble, the Office of Advocacy and Outreach, Departmental Management, proposes to amends chapter XXV of title 7 of the Code of Federal Regulations to add part 2502 to read as follows:

PART 2502—AGRICULTURAL CAREER AND EMPLOYMENT (ACE) GRANTS PROGRAM

Subpart A—General Information

Sec.
2502.1 Applicability of regulations.
2502.2 Definitions.
2502.3 Deviations.

Subpart B—Program Eligibility, Services and Delivery

2502.4. Program eligibility.
2502.5 Program benefits and services.
2502.6. Recipients of program benefits or services.
2502.7 Responsibilities of grantees.

Subpart C—Grant Applications and Administration

2502.8 Pre-award, award, and post-award procedures and administration of grants.

Authority: 7 U.S.C. 2008q–1.

Subpart A—General Information

§ 2502.1 Applicability of regulations.

(a) This part contains program-specific definitions for the ACE Grants Program.

(b) Subpart B establishes the criteria to be used in determining eligibility for an ACE grant award and the requirements for the delivery of program benefits and services, including who is considered eligible to receive such benefits and services and what the responsibilities are of ACE grantees.

(c) Subpart C establishes that, unless otherwise provided herein, the

procedures for applying for ACE grants, the processes to be followed by OAO in evaluating grant proposals and awarding program funds, and the procedures for post-award administration of ACE grants are those set forth at 7 CFR part 2500, Subparts A, B, C, D and E.

§ 2502.2 Definitions.

As used in this part (unless otherwise indicated):

Agency means the Office of Advocacy and Outreach (OAO), an agency of the United States Department of Agriculture (USDA) or a successor agency.

Agricultural Employer means any person or entity which employs, as defined in the Migrant and Seasonal Agricultural Worker Protection Act, 29 U.S.C. 1802, individuals engaged in agricultural employment and may include farmers, ranchers, dairy operators, agricultural cooperatives, and farm labor contractors.

Agricultural Employment means any service or activity as defined in the Migrant and Seasonal Agricultural Worker Protection Act, 29 U.S.C. 1802, including any activity defined as ''agriculture'' in Section 3(f) or the Fair Labor Standards Act of 1938, 29 U.S.C. 203(f), any activity defined as ''agricultural labor'' in 26 U.S.C. 3121(g) (the Internal Revenue Code); as well as the handling, planting, drying, packing, packaging, processing, freezing, or grading prior to delivery for storage of any agricultural or horticultural commodity in its unmanufactured state.

Authorized Departmental Officer (*ADO*) means the individual, acting within the scope of delegated authority, who is responsible for executing and administering awards on behalf of the U.S. Department of Agriculture.

Community-based organization means a non-governmental organization with a well-defined constituency that includes all or part of a particular community.

Consortium means a group formed by entities with similar goals and objectives for the purpose of pooling resources to undertake a project that would otherwise be reasonably beyond the capabilities of any one member.

Eligible entity, as described in section 379C(a) of the Consolidated Farm and Rural Development Act (7 U.S.C. 2008q(a), means a non-profit organization, or a consortium of nonprofit organizations, agribusinesses, State and local governments, agricultural labor organizations, farmer or rancher cooperatives, and community-based organizations with the capacity to train farm workers.

Farmworker means an individual hired to perform agricultural employment, including migrant, seasonal, and hired family farm workers. The term farmworker includes individuals who are not currently employed as a farmworker but who are actively seeking work as such. The term does not include agricultural employers or individuals who are self-employed.

Grantee means the organization designated in the grant award document as the responsible legal entity to which a grant is awarded.

Legally present in the United States shall have the same meaning as the term ''lawfully present'' in the United States as defined at 8 CFR 103.12(a) (addressing eligibility for Title II Social Security benefits under Pub. L. 104–193).

Notice of Funding Availability (NOFA) means a notice published in the **Federal Register** announcing the availability of money for the grants program which lists the application deadlines, eligibility requirements and locations where interested parties can get help in applying.

Office of Advocacy and Outreach (OAO) means the Office of Advocacy and Outreach, an office within the USDA's Departmental Management.

Request for Proposal (RFP) refers to a grant competition and is used interchangeably with the phrase grant application notice and solicitation for grant applications (SFA).

Retaining an agricultural job means continuing agricultural employment, including upgraded employment.

Returning from an agricultural job means returning to a home area from a position in agricultural employment.

Secretary means the Secretary of Agriculture and any other officer or employee of the United States Department of Agriculture to whom the authority involved is delegated.

Securing an agricultural job means obtaining agricultural employment.

State means any of the States of the United States, the District of Columbia, the Virgin Islands, the Commonwealth of Puerto Rico, and Guam.

United States worker (U.S. worker) shall have the same meaning as the term U.S. worker defined by the Department of Labor at 20 CFR 655.4.

Upgrading an agricultural job means advancement to a position in agricultural employment which offers more hours of work and/or better terms and conditions of employment and/or an increase in wages.

§ 2502.3 Deviations.

Any request by the applicant or grantee for a waiver or deviation from any provision of this part shall be submitted to the ADO identified in the agency specific requirements. OAO shall review the request and notify the applicant/grantee whether the request to deviate has been approved within 30 calendar days from the date of receipt of the deviation request. If the deviation request is still under consideration at the end of 30 calendar days, OAO shall inform the applicant/grantee in writing of the date when the applicant/grantee may expect the decision.

Subpart B—Program Eligibility, Services and Delivery

§ 2502.4. Program eligibility.

(a) Entities eligible to apply for and receive a grant under this part include:

(1) A non-profit organization

(2) A consortium of nonprofit organizations or;

(3) A consortium which includes a non-profit organization(s) and one or more of the following: Agribusinesses, State and local governments, agricultural labor organizations, farmer or rancher cooperatives, and community-based organizations with the capacity to train farm workers.

(b) Additional information about eligible entities may be included in the RFP. In addition, the RFP will specify the criteria by which an entity's capacity to train farm workers will be evaluated, but at a minimum, the entity shall be required to demonstrate that it has:

(1) An understanding of the issues facing hired farmworkers and conditions under which they work; and

(2) Familiarity with the agricultural industry in the geographic area to be served, including agricultural labor needs and existing services for farmworkers;

(3) The capacity to effectively administer a program of services and benefits authorized by the ACE program.

(c) An applicant will be required to submit application information to OAO, as specified in the RFP and/or FOA as part of the grant application.

§ 2502.5 Program benefits and services.

(a) The ACE grants program will be centrally administered by the USDA in a manner consistent with these regulations, as well as the pertinent requirements of 7 CFR part 3015, 7 CFR part 3016, 7 CFR part 3018, 7 CFR part 3019 and 7 CFR part 3052.

(b) The Office of Advocacy and Outreach (OAO) has been designated as the organizational unit responsible for administering the ACE program, including, among other things, determining the number and amount of grants to be awarded, the purposes for the grants to be awarded, as well as the

criteria for the evaluation and award of grants.

(c). Services and benefits provided under the ACE grants program are limited to those which will assist eligible farmworkers in securing, retaining, upgrading or returning from agricultural jobs.

(d) Such services will include the following:

(1) Agricultural labor skills development;

(2) Provision of agricultural labor market information;

(3) Transportation;

(4) Short-term housing while in transit to an agricultural worksite;

(5) Workplace literacy and assistance with English as a second language;

(6) Health and safety instruction, including ways of safeguarding the food supply of the United States;

(7) Such other services as the Secretary deems appropriate.

(e) Grant funds shall not be used to deliver or replace any services or benefits which an agricultural employer, association, contractor, or any other entity is legally obliged to provide.

§ 2502.6 Recipients of program benefits or services.

(a) Those eligible to receive program services or benefits under the ACE program are farmworkers who meet the definition of ''United States Workers'' as set forth in § 2502.2.

(b) Grantees shall be responsible for verifying the employment of farmworkers who are actively employed and are seeking to participate in program services or benefits. Unemployed farmworkers seeking to participate shall be required to certify to grantees that they are eligible for program services and benefits as provided herein. Additional eligibility requirements may be included in the RFP.

§ 2502.7 Responsibilities of grantees.

Each grantee is responsible for providing services and/or benefits authorized by this program in accord with a service delivery strategy described in its approved grant plan. The services must reflect the needs of the relevant farmworker population in the area to be served and be consistent with the goals of assisting farmworkers in securing, retaining, upgrading, or returning from agricultural jobs. The necessary components of a service delivery strategy and grant plan will be fully set forth in an RFP but the plan shall include, at a minimum, the following:

(a) The employment and education needs of the farmworker population to be served;

(b) The manner in which the proposed services to be delivered will assist agricultural employers and farmworkers in securing, retaining, upgrading or returning from agricultural jobs;

(c) The manner in which the proposed services will be coordinated with other available services;

(d) The number of participants the grantee expects to serve for each service provided, the results expected and the anticipated expenditures for each category of service.

Subpart C—Grant Applications and Administration

§ 2502.8 Pre-award, award, and post-award procedures and administration of grants.

(a) Unless otherwise provided in this part, the requirements governing pre-award solicitation and submission of proposals and/or applications, the review and evaluation of such, the award of grant funds, and post-award and close-out procedures are those set forth at 7 CFR part 2500, subparts A, B, C, D and E.

(b) For purposes of the ACE Grants Program, the provisions § 2500.49 of this chapter shall not apply. In lieu of that provision, the following requirements shall apply: Awardees may not subcontract more than 20 percent of the award to other parties without prior written approval of the ADO. To request approval a justification for the proposed subcontract, a performance statement, and a detailed budget for the subcontract must be submitted in writing to the ADO.

Signed in Washington, DC, on October 14, 2011.

Pearlie S. Reed,

Assistant Secretary for Administration for the Office of the Secretary.

[FR Doc. 2011–27109 Filed 10–26–11; 8:45 am]

BILLING CODE 3412–89–P

DEPARTMENT OF TRANSPORTATION

Federal Aviation Administration

14 CFR Part 25

[Docket No. FAA–2011–1172: Notice No. 25–11–17–SC]

Special Conditions: Gulfstream Aerospace LP (GALP) Model G280 Airplane, Operation Without Normal Electrical Power

AGENCY: Federal Aviation Administration (FAA), DOT.

ACTION: Notice of proposed special conditions.

SUMMARY: This action proposes special conditions for the Gulfstream Aerospace LP (GALP) Model G280 airplane. This airplane will have a novel or unusual design feature associated with operation without normal electrical power. The applicable airworthiness regulations do not contain adequate or appropriate safety standards for this design feature. These proposed special conditions contain the additional safety standards that the Administrator considers necessary to establish a level of safety equivalent to that established by the existing airworthiness standards.

DATES: We must receive your comments by November 16, 2011.

ADDRESSES: You must mail two copies of your comments to: Federal Aviation Administration, Transport Airplane Directorate, Attn: Rules Docket (ANM–113), Docket No. FAA–2011–1172, 1601 Lind Avenue, SW., Renton, Washington 98057–3356. You may deliver two copies to the Transport Airplane Directorate at the above address. You must mark your comments: Docket No. FAA–2011–1172. You can inspect comments in the Rules Docket weekdays, except Federal holidays, between 7:30 a.m. and 4 p.m.

FOR FURTHER INFORMATION CONTACT: Nazih Khaouly, Transport Airplane Directorate, Aircraft Certification Service, 1601 Lind Avenue SW., Renton, Washington 98057–3356; telephone (425) 227–2432; facsimile (425) 227–1149.

SUPPLEMENTARY INFORMATION:

Comments Invited

We invite interested people to take part in this rulemaking by sending written comments, data, or views. The most helpful comments reference a specific portion of the special conditions, explain the reason for any recommended change, and include supporting data. We ask that you send us two copies of written comments.

We will file in the docket all comments we receive, as well as a report summarizing each substantive public contact with FAA personnel concerning these special conditions. You can inspect the docket before and after the comment closing date. If you wish to review the docket in person, go to the address in the **ADDRESSES** section of this preamble between 7:30 a.m. and 4 p.m., Monday through Friday, except Federal holidays.

We will consider all comments we receive on or before the closing date for comments. We will consider comments filed late if it is possible to do so without incurring expense or delay. We

may change these special conditions based on the comments we receive.

If you want us to acknowledge receipt of your comments on this proposal, include with your comments a self-addressed, stamped postcard on which you have written the docket number. We will stamp the date on the postcard and mail it back to you.

Background

On March 30, 2006, GALP applied for a type certificate for their new Model G280 airplane. The G280 will have a novel or unusual design feature associated with operation without normal electrical power.

Type Certification Basis

Under the provisions of Title 14 Code of Federal Regulations (14 CFR) 21.17, GALP must show that the Model G280 airplane meets the applicable provisions of part 25 as amended by Amendments 25–1 through 25–117.

If the Administrator finds that the applicable airworthiness regulations (*i.e.,* 14 CFR part 25) do not contain adequate or appropriate safety standards for the Model G280 airplane because of a novel or unusual design feature, special conditions are prescribed under the provisions of § 21.16.

Special conditions are initially applicable to the model for which they are issued. Should the type certificate for that model be amended later to include any other model that incorporates the same novel or unusual design feature, the special conditions would also apply to the other model.

In addition to the applicable airworthiness regulations and special conditions, the Model G280 airplane must comply with the fuel-vent and exhaust-emission requirements of 14 CFR part 34 and the noise-certification requirements of 14 CFR part 36; and the FAA must issue a finding of regulatory adequacy under § 611 of Public Law 92–574, the ''Noise Control Act of 1972.''

The FAA issues special conditions, as defined in 14 CFR 11.19, in accordance with § 11.38, and they become part of the type-certification basis under § 21.17(a)(2).

Novel or Unusual Design Features

The Model G280 airplane will incorporate the following novel or unusual design features:

The Model G280 airplane is equipped with electrical and electronic systems that control critical functions and systems. Examples of these include the electronic displays, rudder, brakes, spoilers, flaps, and electronic engine controls. The G280 electrical power generation and distribution architecture is equipped with an essential APU and not equipped with a Ram Air Turbine (RAT) generator. The loss of all electrical power to certain functions and systems impacts the airplane ability to land safely. Therefore, these special conditions are issued to retain the level of safety intended by the current § 25.1351(d).

Discussion

The Model G280 airplane requires a continuous source of electrical power for continued safe flight and landing. The current regulation in § 25.1351(d), ''Operation without normal electrical power,'' states that the airplane must be operated safely in VFR conditions, for a period of not less than five minutes, with the normal electrical power (electrical power sources excluding the battery) inoperative. This rule was structured around a traditional design utilizing mechanical controls for flight systems while the crew took time to sort out the electrical failure, start engine(s) if necessary, and re-establish some of the electrical-power-generation capability.

To maintain the same level of safety associated with traditional designs, the Model G280 airplane electrical-system design must not be time-limited in its operation. It should be noted that service experience has shown that the loss of all electrical power, which is generated by the airplane's engine generators or auxiliary power unit (APU) is not extremely improbable. Thus, it must be demonstrated that the airplane can continue through safe flight and landing (including steering and braking on ground for airplanes using steer/brake-by-wire) with the use of its emergency electrical-power systems. These emergency electrical-power systems must be able to power loads that are required for continued safe flight and landing.

Applicability

As discussed above, these special conditions are applicable to the GALP Model G280 airplane. Should GALP apply at a later date for a change to the type certificate to include another model incorporating the same novel or unusual design feature, the special conditions would apply to that model as well.

Gulfstream Model G280 certification is currently scheduled for December 2011. The substance of these special conditions has been subject to the notice and public-comment procedure in several prior instances. Therefore, because a delay would significantly affect the applicant's certification of the airplane, we are shortening the public-comment period to 20 days.

Conclusion

This action affects only certain novel or unusual design features on the GALP Model G280 airplane. It is not a rule of general applicability and it affects only the applicant who applied to the FAA for approval of these features on the airplane.

List of Subjects in 14 CFR Part 25

Aircraft, Aviation safety, Reporting and recordkeeping requirements.

The authority citation for these special conditions is as follows:

Authority: 49 U.S.C. 106(g), 40113, 44701, 44702, 44704.

The Proposed Special Conditions

Accordingly, pursuant to the authority delegated to me by the Administrator, the following proposed special conditions are issued as part of the type-certification basis for GALP Model G280 airplanes. The special conditions are issued in lieu of § 25.1351(d) and are required to ensure that the airplane has sufficient electrical power for continued safe flight and landing.

1. The applicant must show by test or a combination of test and analysis that the airplane is capable of continued safe flight and landing with all normal electrical power sources inoperative, as prescribed by paragraphs (1)(a) and (1)(b) below.

For purposes of this special condition, normal sources of electrical-power generation do not include any alternate power sources such as a battery, ram-air turbine (RAT), or independent power systems such as the flight-control permanent-magnet generating system. In showing capability for continued safe flight and landing, consideration must be given to systems capability, effects on crew workload and operating conditions, and the physiological needs of the flightcrew and passengers for the longest diversion time for which approval is sought.

a. Common cause failures, cascading failures, and zonal physical threats must be considered in showing compliance with this requirement.

b. The ability to restore operation of portions of the electrical-power generation and distribution system may be considered if it can be shown that unrecoverable loss of those portions of the system is extremely improbable. An alternative source of electrical power must be provided for the time required to restore the minimum electrical-power-generation capability required for safe flight and landing. Unrecoverable

loss of all engines may be excluded when showing that unrecoverable loss of critical portions of the electrical system is extremely improbable. Unrecoverable loss of all engines is covered in 2, below, and thus may be excluded when showing compliance with this requirement.

2. Regardless of any electrical-generation and distribution-system recovery capability shown under paragraph 1, sufficient electrical-system capability must be provided to:

a. Allow time to descend, with all engines inoperative, at the speed that provides the best glide slope, from the maximum operating altitude to the altitude at which the soonest possible engine restart could be accomplished, and

b. Subsequently allow multiple start attempts of the engines and APU. This capability must be provided in addition to the electrical capability required by existing 14 CFR part 25 requirements related to operation with all engines inoperative.

3. The airplane emergency electrical-power system must be designed to supply:

a. Electrical power required for immediate safety, which must continue to operate without the need for crew action following the loss of the normal electrical power, for a duration sufficient to allow reconfiguration to provide a non-time limited source of electrical power.

b. Electrical power required for continued safe flight and landing for the maximum diversion time.

4. If APU-generated electrical power is used in satisfying the requirements of these special conditions, and if reaching a suitable runway upon which to land is beyond the capacity of the battery systems, then the APU must be able to be started under any foreseeable flight condition prior to the depletion of the battery or the restoration of normal electrical power, which ever occurs first. This capability must be demonstrated by flight tests at the most critical condition.

a. It must be shown that the APU will provide adequate electrical power for continued safe flight and landing.

b. The AFM must incorporate non-normal procedures that will direct the pilot to take appropriate actions to activate the APU after loss of normal engine-driven generated electrical power.

As a part of showing compliance with these special conditions, the tests by which loss of all normal electrical power is demonstrated must also take into account the following:

1. The failure condition should be assumed to occur during night instrument meteorological conditions (IMC), at the most critical phase of the flight, relative to the worst possible electrical-power distribution and equipment-loads-demand condition.

2. After the unrestorable loss of normal engine generator power, the airplane-engine restart capability must be provided and operations continued in IMC.

3. It should be demonstrated that the aircraft is capable of continued safe flight and landing. The length of time must be computed based on the maximum diversion-time capability for which the airplane is being certified. Consideration for airspeed reductions resulting from the associated failure or failures must be made.

4. The airplane must provide adequate indication of loss of normal electrical power to direct the pilot to the non-normal procedures, and the AFM must incorporate non-normal procedures that will direct the pilot to take appropriate actions.

Issued in Renton, Washington, on October 14, 2011.

Ali Bahrami,

Manager, Transport Airplane Directorate, Aircraft Certification Service.

[FR Doc. 2011–27765 Filed 10–26–11; 8:45 am]

BILLING CODE 4910–13–P

DEPARTMENT OF TRANSPORTATION

Federal Aviation Administration

14 CFR Part 71

[Docket No. FAA–2011–0611; Airspace Docket No. 11–AWP–11]

Proposed Amendment of Class D Airspace; Santa Monica, CA

AGENCY: Federal Aviation Administration (FAA), DOT.

ACTION: Notice of proposed rulemaking (NPRM).

SUMMARY: This action proposes to modify Class D airspace at Santa Monica Municipal Airport, CA, to accommodate aircraft departing and arriving under Instrument Flight Rules (IFR) at Santa Monica Municipal Airport. This action is a result of the FAA's biennial review, along with a study of the Santa Monica Municipal Airport airspace area that would further enhance the safety and management of aircraft operations at the airport.

DATES: Comments must be received on or before December 12, 2011.

ADDRESSES: Send comments on this proposal to the U.S. Department of Transportation, Docket Operations, M–30, West Building Ground Floor, Room W12–140, 1200 New Jersey Avenue, SE., Washington, DC 20590; telephone (202) 366–9826. You must identify FAA Docket No. FAA–2011–0611; Airspace Docket No. 11–AWP–11, at the beginning of your comments. You may also submit comments through the Internet at *http://www.regulations.gov*.

FOR FURTHER INFORMATION CONTACT: Rick Roberts, Federal Aviation Administration, Operations Support Group, Western Service Center, 1601 Lind Avenue, SW., Renton, WA 98057; telephone (425) 203–4517.

SUPPLEMENTARY INFORMATION:

Comments Invited

Interested parties are invited to participate in this proposed rulemaking by submitting such written data, views, or arguments, as they may desire. Comments that provide the factual basis supporting the views and suggestions presented are particularly helpful in developing reasoned regulatory decisions on the proposal. Comments are specifically invited on the overall regulatory, aeronautical, economic, environmental, and energy-related aspects of the proposal.

Communications should identify both docket numbers (FAA Docket No. FAA 2011–0611 and Airspace Docket No. 11–AWP–11) and be submitted in triplicate to the Docket Management System (see **ADDRESSES** section for address and phone number). You may also submit comments through the Internet at *http://www.regulations.gov*.

Commenters wishing the FAA to acknowledge receipt of their comments on this action must submit with those comments a self-addressed stamped postcard on which the following statement is made: ''Comments to FAA Docket No. FAA–2011–0611 and Airspace Docket No. 11–AWP–11''. The postcard will be date/time stamped and returned to the commenter.

All communications received on or before the specified closing date for comments will be considered before taking action on the proposed rule. The proposal contained in this action may be changed in light of comments received. All comments submitted will be available for examination in the public docket both before and after the closing date for comments. A report summarizing each substantive public contact with FAA personnel concerned with this rulemaking will be filed in the docket.

Availability of NPRMs

An electronic copy of this document may be downloaded through the

Internet at *http://www.regulations.gov*. Recently published rulemaking documents can also be accessed through the FAA's Web page at *http://www.faa.gov/airports_airtraffic/air_traffic/publications/airspace_amendments/*.

You may review the public docket containing the proposal, any comments received, and any final disposition in person in the Dockets Office (see the **ADDRESSES** section for the address and phone number) between 9 a.m. and 5 p.m., Monday through Friday, except federal holidays. An informal docket may also be examined during normal business hours at the Northwest Mountain Regional Office of the Federal Aviation Administration, Air Traffic Organization, Western Service Center, Operations Support Group, 1601 Lind Avenue, SW., Renton, WA 98057.

Persons interested in being placed on a mailing list for future NPRM's should contact the FAA's Office of Rulemaking, (202) 267–9677, for a copy of Advisory Circular No. 11–2A, Notice of Proposed Rulemaking Distribution System, which describes the application procedure.

The Proposal

The FAA is proposing an amendment to Title 14 Code of Federal Regulations (14 CFR) Part 71 by modifying Class D airspace at Santa Monica Municipal Airport, CA, to accommodate IFR aircraft departing and arriving at the airport. This action, initiated by FAA's biennial review of the Santa Monica Municipal Airport airspace area, and based on the results of a study conducted by the Los Angeles Visual Flight Rules (VFR) Task Force, and the Los Angeles Class B Workgroup, would enhance the safety and management of IFR operations at the airport. Class D airspace designations are published in paragraph 5000, of FAA Order 7400.9V, dated August 9, 2011, and effective September 15, 2011, which is incorporated by reference in 14 CFR 71.1. The Class D airspace designation listed in this document will be published subsequently in this Order.

The FAA has determined this proposed regulation only involves an established body of technical regulations for which frequent and routine amendments are necessary to keep them operationally current. Therefore, this proposed regulation; (1) Is not a ''significant regulatory action'' under Executive Order 12866; (2) is not a ''significant rule'' under DOT Regulatory Policies and Procedures (44 FR 11034; February 26, 1979); and (3) does not warrant preparation of a regulatory evaluation as the anticipated impact is so minimal. Since this is a routine matter that will only affect air traffic procedures and air navigation, it is certified this proposed rule, when promulgated, would not have a significant economic impact on a substantial number of small entities under the criteria of the Regulatory Flexibility Act.

The FAA's authority to issue rules regarding aviation safety is found in Title 49 of the U.S. Code. Subtitle 1, Section 106, describes the authority for the FAA Administrator. Subtitle VII, Aviation Programs, describes in more detail the scope of the agency's authority. This rulemaking is promulgated under the authority described in Subtitle VII, Part A, Subpart I, Section 40103. Under that section, the FAA is charged with prescribing regulations to assign the use of the airspace necessary to ensure the safety of aircraft and the efficient use of airspace. This regulation is within the scope of that authority as it would amend this proposal for controlled airspace at Santa Monica Municipal Airport, Santa Monica, CA.

List of Subjects in 14 CFR Part 71

Airspace, Incorporation by reference, Navigation (air).

The Proposed Amendment

Accordingly, pursuant to the authority delegated to me, the Federal Aviation Administration proposes to amend 14 CFR part 71 as follows:

PART 71—DESIGNATION OF CLASS A, B, C, D AND E AIRSPACE AREAS; AIR TRAFFIC SERVICE ROUTES; AND REPORTING POINTS

1. The authority citation for 14 CFR part 71 continues to read as follows:

Authority: 49 U.S.C. 106(g), 40103, 40113, 40120; E.O. 10854, 24 FR 9565, 3 CFR, 1959–1963 Comp., p. 389.

§ 71.1 [Amended]

2. The incorporation by reference in 14 CFR 71.1 of the Federal Aviation Administration Order 7400.9V, Airspace Designations and Reporting Points, dated August 9, 2011, and effective September 15, 2011 is amended as follows:

Paragraph 5000 Class D airspace.

* * * * *

AWP CA D Santa Monica, CA [Amended]

Santa Monica Municipal Airport, CA
(Lat. 34°00′57″ N., long. 118°27′05″ W.)

That airspace extending upward from the surface to and including 2,700 feet MSL within a 2.7-mile radius of Santa Monica Municipal Airport, and within 1.5 miles each side of the 047° bearing from the airport extending from the 2.7-mile radius to 4.6 miles northeast, and that airspace beginning at the intersection of the 2.7-mile radius and 287° bearing from the airport to lat. 34°01′43″ N., long. 118°31′49″ W.; to lat. 33°59′06″ N., long. 118°32′16″ W.; to lat. 33°58′47″ N., long. 118°31′43″ W.; to lat. 33°58′04″ N., long. 118°31′42″ W.; to lat. 33°58′04″ N., long. 118°30′25″ W.; to lat. 33°57′00″ N., long. 118°28′41″ W.; to the intersection of the 168° bearing from the airport and the 2.7-mile radius of the airport. This Class D airspace area is effective during the specific dates and times established in advance by a Notice to Airmen. The effective date and time will thereafter be continuously published in the Airport/Facility Directory.

Issued in Seattle, Washington, on October 20, 2011.

John Warner,

Manager, Operations Support Group, Western Service Center.

[FR Doc. 2011–27807 Filed 10–26–11; 8:45 am]

BILLING CODE 4910–13–P

ENVIRONMENTAL PROTECTION AGENCY

40 CFR Part 52

[EPA–R05–OAR–2010–0394; FRL–9483–5]

Approval and Promulgation of Implementation Plans; Illinois; Consumer Products and AIM Rules

AGENCY: Environmental Protection Agency (EPA).

ACTION: Proposed rule.

SUMMARY: EPA is proposing to approve Illinois' volatile organic compound (VOC) emission limits for consumer products and architectural and industrial maintenance (AIM) coatings and incorporate this new rule into the State Implementation Plan (SIP) for the State of Illinois. However, there are four specific paragraphs in this rule with deficiencies that EPA is proposing to conditionally approve, based on a State commitment to address the deficiencies no later than one year from the date of EPA's conditional approval.

DATES: Comments must be received on or before November 28, 2011.

ADDRESSES: Submit comments, identified by Docket ID No. EPA–R05–OAR–2010–0394, by one of the following methods:

1. *http://www.regulations.gov:* Follow the on-line instructions for submitting comments.
2. *E-mail: blakley.pamela@epa.gov.*
3. *Fax:* (312) 886–4447.
4. *Mail:* Pamela Blakley, Chief, Control Strategies Section, (AR–18J), U.S. Environmental Protection Agency, 77 West Jackson Boulevard, Chicago, Illinois 60604.

5. *Hand Delivery:* Pamela Blakley, Chief, Control Strategies Section, (AR–18J), U.S. Environmental Protection Agency, 77 West Jackson Boulevard, Chicago, Illinois 60604. Such deliveries are only accepted during the Regional Office normal hours of operation, and special arrangements should be made for deliveries of boxed information. The Regional Office official hours of business are Monday through Friday, 8:30 a.m. to 4:30 p.m., excluding Federal holidays.

Instructions: Direct your comments to Docket ID No. EPA–R05–OAR–2010–0394. EPA's policy is that all comments received will be included in the public docket without change and may be made available online at *http://www.regulations.gov,* including any personal information provided, unless the comment includes information claimed to be Confidential Business Information (CBI) or other information whose disclosure is restricted by statute. Do not submit information that you consider to be CBI or otherwise protected through *http://www.regulations.gov* or e-mail. The *http://www.regulations.gov* Web site is an ''anonymous access'' system, which means EPA will not know your identity or contact information unless you provide it in the body of your comment. If you send an e-mail comment directly to EPA without going through *http://www.regulations.gov* your e-mail address will be automatically captured and included as part of the comment that is placed in the public docket and made available on the Internet. If you submit an electronic comment, EPA recommends that you include your name and other contact information in the body of your comment and with any disk or CD–ROM you submit. If EPA cannot read your comment due to technical difficulties and cannot contact you for clarification, EPA may not be able to consider your comment. Electronic files should avoid the use of special characters, any form of encryption, and be free of any defects or viruses. For additional instructions on submitting comments, go to Section I of the **SUPPLEMENTARY INFORMATION** section of this document.

Docket: All documents in the docket are listed in the *http://www.regulations.gov* index. Although listed in the index, some information is not publicly available, e.g., CBI or other information whose disclosure is restricted by statute. Certain other material, such as copyrighted material, will be publicly available only in hard copy. Publicly available docket materials are available either electronically in *http://www.regulations.gov* or in hard copy at the Environmental Protection Agency, Region 5, Air and Radiation Division, 77 West Jackson Boulevard, Chicago, Illinois 60604. This facility is open from 8:30 a.m. to 4:30 p.m., Monday through Friday, excluding Federal holidays. We recommend that you telephone Anthony Maietta at (312) 353–8777 before visiting the Region 5 office.

FOR FURTHER INFORMATION CONTACT: Anthony Maietta, Environmental Protection Specialist, Control Strategies Section, Air Programs Branch (AR–18J), U.S. Environmental Protection Agency, Region 5, 77 West Jackson Boulevard, Chicago, Illinois 60604, (312) 353–8777, or *maietta.anthony@epa.gov.*

SUPPLEMENTARY INFORMATION: Throughout this document whenever ''we,'' ''us,'' or ''our'' is used, we mean EPA. This **SUPPLEMENTARY INFORMATION** section is arranged as follows:

I. What should I consider as I prepare my comments for EPA?
II. Background
III. Conditions for Approval
IV. What sources are affected by this proposed action?
V. What is EPA's proposed action?
VI. Statutory and Executive Order Reviews

I. What should I consider as I prepare my comments for EPA?

When submitting comments, remember to:

1. Identify the rulemaking by docket number and other identifying information (subject heading, **Federal Register** date, and page number).

2. Follow directions—EPA may ask you to respond to specific questions or organize comments by referencing a Code of Federal Regulations (CFR) part or section number.

3. Explain why you agree or disagree; suggest alternatives and substitute language for your requested changes.

4. Describe any assumptions and provide any technical information and/or data that you used.

5. If you estimate potential costs or burdens, explain how you arrived at your estimate in sufficient detail to allow for it to be reproduced.

6. Provide specific examples to illustrate your concerns, and suggest alternatives.

7. Explain your views as clearly as possible, avoiding the use of profanity or personal threats.

8. Make sure to submit your comments by the comment period deadline identified.

II. Background

Consumer products are a wide array of sprays, gels, cleaners, adhesives, and other chemically formulated products that are purchased for personal or institutional use and that emit VOC through their use, consumption, storage, disposal, destruction, or decomposition. AIM coatings are paints, varnishes, and other similar coatings that are meant for use on external surfaces of buildings or other outside structures and that emit VOC through similar means to consumer products.

On April 7, 2010, the Illinois Environmental Protection Agency (Illinois EPA) submitted to EPA a request to approve into the Illinois SIP Part 223, ''Standards and Limitations for Organic material Emissions for Area Sources'' of Title 35 of the IAC (35 IAC 223). The purpose of the rule is to limit VOC emissions by requiring reductions in the VOC content of consumer products and AIM coatings. 35 IAC 223 consists of 34 new chapters, and is divided into three subparts (a subpart for general provisions and one subpart each for consumer products and AIM coatings rules). Part 223 includes the following components for control of VOC from consumer products and AIM coatings:

(1) VOC emissions limits, reporting requirements, and labeling requirements for consumer products and AIM coatings sold, supplied, offered for sale, or manufactured in Illinois.

(2) Specific limitations for the sale, supply, offered for sale, use, or manufacture for sale of aerosol adhesives, floor wax strippers, products containing ozone-depleting compounds, and charcoal lighter material.

(3) Test methods for determining compliance with these rules and for determining specific aspects of affected products or coatings.

(4) Alternative compliance plans for any manufacturer of consumer products that has been granted an alternative compliance plan agreement by the California Air Resources Board (CARB).

(5) A special analysis method for Methacrylate Traffic Marking Coatings.

(6) Special recordkeeping requirements for consumer products that contain perchloroethylene or methylene chloride.

(7) Additional labeling requirements for aerosol adhesives, adhesive removers, electronic cleaners, electrical cleaners, energized electrical cleaners, and contact adhesives.

(8) Exemptions for consumer products produced for sale outside of Illinois, consumer products whose VOC emission limits are governed by other rules, and innovative consumer products as defined by CARB.

(9) Incorporation by reference: The State is incorporating by reference a number of materials. These

incorporations by reference include test methods from the American Society for Testing and Materials, EPA, CARB, the Bay Area Air Quality Management District, and the South Coast Air Quality Management District to determine VOC content in a number of the product categories subject to limits in Illinois' new rule. Also incorporated by reference are EPA and the California Code of Regulations (CCR) VOC standards for consumer products. Illinois also incorporated by reference the CCR innovative products exemption and the alternate control plan. These incorporations by reference help persons or companies subject to Illinois' new 35 IAC Part 223 to comply with the VOC limits contained therein.

The rules that Illinois adopted and submitted to EPA for approval are based on existing CARB regulations and model rules developed by the Ozone Transport Commission (OTC) for consumer products and AIM coatings. The OTC has developed model rules for several consumer products and AIM coatings VOC source categories which OTC member states (Illinois is not an OTC member state) have signed a memorandum of understanding to adopt. For consumer products, the CARB regulations and OTC model rule that Illinois based their rule on are at least as stringent, and in some cases more stringent than, EPA's national consumer products rule, ''National Volatile Organic Compound Emission Standards for Consumer Products,'' 40 CFR Part 59, Subpart C. For AIM coatings, the OTC model rule that Illinois' rule is based upon is also at least as stringent, and in some cases more stringent than, EPA's AIM coatings rule, ''National Volatile Organic Compound Emission Standards for Architectural Coatings,'' at 40 CFR Part 59 Subpart D.

III. Conditions for Approval

A rule-by-rule review of Illinois' submittal showed that four paragraphs contained errors. Paragraph (6)(A) of 35 IAC 223.205 erroneously provides two high-volatility organic material limits for aerosol-based antiperspirants when there should be both a high- and medium-volatility limit for this category based on the OTC model rule. Paragraph (6)(B) of 35 IAC 223.205 erroneously provides two medium-volatility organic material limits for non aerosol-based antiperspirants when there should be both a high- and medium-volatility limit for this category based on the OTC model rule.

Paragraph (17)(A) of 35 IAC 223.205 erroneously provides two high-volatility organic material limits for aerosol-based deodorants when there should be both a high- and medium-volatility limit for this category based on the OTC model rule. Paragraph (17)(B) of 35 IAC 223.205 erroneously provides two medium-volatility organic material limits for non aerosol-based deodorants when there should be both a high- and medium-volatility limit for this category based on the OTC model rule.

On September 2, 2011, Illinois sent EPA a letter committing to amend these paragraphs to display the correct limits and limit categories and submit revised rules to EPA within one year of our final rulemaking. Under section 110(k)(4) of the CAA, EPA may conditionally approve a portion of a SIP revision based on a commitment from a state to adopt specific enforceable measures by a date certain that is no more than one year from the date of conditional approval. In this action, we are proposing to approve a portion of the SIP revision that Illinois has submitted on the condition that the specified deficiencies in the SIP revision are corrected as discussed in Illinois' September 2, 2011, letter. If this condition is not fulfilled within one year of the effective date of final rulemaking, the conditional approval will automatically revert to disapproval, as of the deadline for meeting the conditions, without further action from EPA. EPA would subsequently publish a notice in the **Federal Register** informing the public of a disapproval. If Illinois submits final and effective rule revisions correcting the deficiencies, as discussed above, within one year from this conditional approval becoming final and effective, EPA will publish a subsequent notice in the **Federal Register** to acknowledge conversion of the conditional approval to a full approval.

IV. What sources are affected by this proposed action?

Anyone who sells, supplies, offers for sale, or manufactures consumer products and AIM coatings in Illinois is affected by this proposed action. Because of the wide adoption of OTC model rules for consumer products and AIM coatings by California, OTC states, and other Midwestern states, Illinois expects that some of the reductions from adoption of these rules have already been realized. This is because of existing nationwide compliance with the OTC model rules by many of the largest manufacturers of these products. However, because so many states have adopted these rules, and many major manufacturers already comply with these rules, the burden on affected sources will be minor. EPA agrees with Illinois' view.

Illinois held two public hearings on its proposed rule, took public comment on the proposed rule and also contacted approximately 600 entities listed as potentially affected by the rules to provide these sources an opportunity for comment on the proposed rule. While very few of the potentially affected entities responded, it is clear that Illinois made an effort to inform them of the proposed rules.

IV. What is EPA's proposed action?

We propose to conditionally approve paragraphs (6)(A), (6)(B), (17)(A), and (17)(B) of 35 IAC 223.205, based on a commitment from the State sent on September 2, 2011 to correct this rule within one year of our final rulemaking. If the State fails to make this correction within the allowed one year period as discussed above, this conditional approval will revert to disapproval.

We propose to approve and incorporate in to the Illinois SIP the rest of the State's April 7, 2010, submittal, that is, the remainder of 35 IAC Part 223, because VOC limits in these rules are at least as stringent as, and in many cases are more stringent than, EPA's existing limits for these sources. Therefore, approval of these rules will strengthen the Illinois SIP.

VI. Statutory and Executive Order Reviews

Under the CAA, the Administrator is required to approve a SIP submission that complies with the provisions of the CAA and applicable Federal regulations. 42 U.S.C. 7410(k); 40 CFR 52.02(a). Thus, in reviewing SIP submissions, EPA's role is to approve state choices, provided that they meet the criteria of the CAA. Accordingly, this action merely approves state law as meeting Federal requirements and does not impose additional requirements beyond those imposed by state law. For that reason, this action:

- Is not a ''significant regulatory action'' subject to review by the Office of Management and Budget under Executive Order 12866 (58 FR 51735, October 4, 1993);
- Does not impose an information collection burden under the provisions of the Paperwork Reduction Act (44 U.S.C. 3501 *et seq.*);
- Is certified as not having a significant economic impact on a substantial number of small entities under the Regulatory Flexibility Act (5 U.S.C. 601 *et seq.*);
- Does not contain any unfunded mandate or significantly or uniquely affect small governments, as described

in the Unfunded Mandates Reform Act of 1995 (Pub. L.104–4);

• Does not have Federalism implications as specified in Executive Order 13132 (64 FR 43255, August 10, 1999);

• Is not an economically significant regulatory action based on health or safety risks subject to Executive Order 13045 (62 FR 19885, April 23, 1997);

• Is not a significant regulatory action subject to Executive Order 13211 (66 FR 28355, May 22, 2001);

• Is not subject to requirements of Section 12(d) of the National Technology Transfer and Advancement Act of 1995 (15 U.S.C. 272 note) because application of those requirements would be inconsistent with the Clean Air Act; and

• Does not provide EPA with the discretionary authority to address, as appropriate, disproportionate human health or environmental effects, using practicable and legally permissible methods, under Executive Order 12898 (59 FR 7629, February 16, 1994).

In addition, this rule does not have tribal implications as specified by Executive Order 13175 (65 FR 67249, November 9, 2000), because the SIP is not approved to apply in Indian country located in the state, and EPA notes that it will not impose substantial direct costs on tribal governments or preempt tribal law.

List of Subjects in 40 CFR Part 52

Environmental protection, Air pollution control, Volatile organic compounds.

Dated: October 18, 2011.

Susan Hedman,

Regional Administrator, Region 5.

[FR Doc. 2011–27810 Filed 10–26–11; 8:45 am]

BILLING CODE 6560–50–P

FEDERAL COMMUNICATIONS COMMISSION

47 CFR Part 76

[MB Docket No. 11–169; PP Docket No. 00–67; FCC 11–153]

Basic Service Tier Encryption Compatibility Between Cable Systems and Consumer Electronics Equipment

AGENCY: Federal Communications Commission.

ACTION: Proposed rule.

SUMMARY: In this document, we propose a new rule to allow cable operators to encrypt the basic service tier in all-digital systems, provided that those cable operators undertake certain consumer protection measures for a limited period of time in order to minimize any potential subscriber disruption.

DATES: Submit comments on or before November 28, 2011. Submit reply comments on or before December 12, 2011.

FOR FURTHER INFORMATION CONTACT: For additional information on this proceeding, contact Brendan Murray, *Brendan.Murray@fcc.gov,* of the Media Bureau, Policy Division, (202) 418–2120.

SUPPLEMENTARY INFORMATION: This is a summary of the Commission's *Notice of Proposed Rulemaking,* FCC 11–153, adopted on October 13, 2011 and released on October 14, 2011. The full text of this document is available for public inspection and copying during regular business hours in the FCC Reference Center, Federal Communications Commission, 445 12th Street, SW., CY–A257, Washington, DC 20554. This document will also be available via ECFS (*http://www.fcc.gov/cgb/ecfs/*). (Documents will be available electronically in ASCII, Word 97, and/or Adobe Acrobat.) The complete text may be purchased from the Commission's copy contractor, 445 12th Street, SW., Room CY–B402, Washington, DC 20554. To request these documents in accessible formats (computer diskettes, large print, audio recording, and Braille), send an email to *fcc504@fcc.gov* or call the Commission's Consumer and Governmental Affairs Bureau at (202) 418–0530 (voice), (202) 418–0432 (TTY).

Summary of the Notice of Proposed Rulemaking

1. With this Notice of Proposed Rulemaking (NPRM), we seek comment on whether to retain the basic service tier encryption prohibition for all-digital cable systems. As discussed below, we tentatively conclude that allowing cable operators to encrypt the basic service tier in all-digital systems will not substantially affect compatibility between cable service and consumer electronics equipment for most subscribers. At the same time, however, we recognize that some consumers subscribe only to a cable operator's digital basic service tier and currently are able to do so without using a set-top box or other equipment. Similarly, there are consumers that may have a set-top box on a primary television but access the unencrypted digital basic service tier on second or third televisions in their home without using a set-top box or other equipment. Although we expect the number of subscribers in these situations to be relatively small, these consumers may be affected by lifting the encryption prohibition for all-digital cable systems. Accordingly, we tentatively conclude that, any operators of all-digital cable systems that choose to encrypt the basic service tier must comply with certain consumer protection measures for a limited period of time in order to minimize any potential subscriber disruption.

2. In the Cable Television Consumer Protection and Competition Act of 1992 (1992 Cable Act), Congress recognized that compatibility problems between cable service and consumer electronics equipment were limiting and/or precluding the operation of premium features of consumer equipment and were affecting the ability of consumer equipment to receive cable programming. Section 624A of the Act was added by Section 17 of the 1992 Cable Act to address this issue. Specifically, section 624A requires the Commission to issue regulations to assure compatibility between consumer electronics equipment and cable systems. In 1994, the Commission implemented the requirements of section 624A. As part of that implementation, the Commission added § 76.630(a) to its rules. Section 76.630(a) of the Commission's rules prohibits cable operators from scrambling or encrypting signals carried on the basic tier of service. The Commission determined that this rule would significantly advance compatibility by ensuring that all subscribers would be able to receive basic tier signals ''in the clear'' and that basic-only subscribers with cable-ready televisions would not need set-top boxes. The Commission concluded that ''[t]his rule also will have minimal impact on the cable industry in view of the fact that most cable systems now generally do not scramble basic tier signals.''

3. Subsequent to the Commission's adoption of the encryption ban, cable operators began to upgrade their systems to offer digital cable service. More recently, cable operators' transition to more efficient all-digital systems has freed up spectrum to offer new or improved products and services like higher-speed Internet access and high definition programming. As a result of this digital transition, most cable subscribers now have at least one cable set-top box or CableCARD device in their homes. As cable operators began to transition programming on their cable programming service tier (*CPST*) to digital, many program carriage agreements required cable operators to encrypt that programming as a condition of carriage. Encryption refers

to the method that cable operators use to make sure that cable service is available only to subscribers who have paid for service. Because encryption serves such an important purpose, encryption of digital cable service has become more sophisticated than analog scrambling techniques. Encryption methods did not used to be standard across all cable systems, however. In 2003, therefore, the Commission adopted the CableCARD standard to address this incompatibility problem. The CableCARD, which subscribers must lease from their cable provider either as a part of a leased set-top box or separately for use in a compatible retail television or set-top box, decrypts the cable services that the cable operator encrypts. At present, approximately 77 percent of cable subscribers have at least one digital cable set-top box or retail CableCARD device in their home.

4. The fact that most subscribers have a cable set-top box or retail CableCARD device limits the impact of encryption of the basic service tier in all-digital systems on cable subscribers. Most television sets, consumer electronics devices, and leased set-top boxes have included QAM tuners since at least 2007, meaning that those devices are capable of tuning unencrypted digital cable service. As stated above, however, most cable operators who have transitioned to all-digital service encrypt the entire *CPST.* Therefore, many cable subscribers currently use CableCARDs (either in a retail device or leased set-top box) to decrypt their cable service. The remainder of digital cable subscribers use either (i) leased set-top boxes with integrated security (offered under waivers of the separated security requirement or originally deployed before the requirement became effective) to decrypt cable service, or (ii) television sets or devices with QAM tuners, but without CableCARDs, to receive any remaining unencrypted cable signals (typically limited to the basic service tier). Encryption of the basic service tier in all-digital systems would affect this second group, i.e., the digital cable subscribers who use television sets or devices with QAM tuners, but without CableCARDs. We do not know how many subscribers fall into this group, but based on the Cablevision Report discussed below, we expect it to be small.

5. In the past, the Commission has waived the basic service tier encryption prohibition on a demonstration of extraordinary theft of service. Theft of service occurs when unauthorized users physically connect their outlets to the cable plant; in other words, people would climb poles and connect the cable operator's coaxial cable to homes that do not subscribe to cable service. Recently, the Commission has received several requests for waiver of the rule prohibiting encryption of the basic service tier based on the argument that the rule imposes more burdens than benefits as cable operators transition to all-digital systems. The petitioners argue that there are very few people who subscribe only to the basic service tier in all-digital systems and therefore the overwhelming majority of subscribers to all-digital systems already have a set-top box or CableCARD-equipped retail device and therefore would be unaffected by encryption of the basic service tier. Furthermore, they contend, encrypting the basic service tier in an all-digital system will eliminate the need for many service appointments because it will allow cable operators to enable and disable cable service remotely by activating and deactivating the encryption capability of set-top boxes and CableCARDs from the headend. In order to remotely activate and deactivate service, cable operators must leave every home connected to the cable plant rather than manually disconnect the cable that runs to a home, which is how many cable operators disconnect service today. If the cable operator is allowed to encrypt every signal, the operator can keep every home connected to the cable plant regardless of whether the home subscribes to cable service. The operator can ensure that only paid subscribers are able to access the service by authorizing and deauthorizing CableCARDs as people subscribe or cancel cable service.

6. In waiver proceedings, certain commenters have asserted that while encryption of all service tiers has its benefits, it also imposes some burdens on consumers and device manufacturers. For example, some commenters explained that they own or manufacture devices like personal computer cable tuner cards that cable subscribers use to view or record unencrypted programming with their computers. These commenters expressed concern that those devices do not have the ability to decrypt cable signals and therefore could not display encrypted cable programming. These commenters asserted that they purchased or manufactured these devices based on the expectation that unencrypted basic service tier QAM signals would be available from cable operators, and that encryption of the basic service tier would make the devices useless. In addition, some commenters objected to the impact that encryption of the basic service tier would have on televisions with clear-QAM tuners that currently are attached to the cable network directly without a set-top box. Encryption of the basic service tier would require those subscribers to lease a set-top box to access basic service tier channels on those television sets.

7. In January 2010, the Media Bureau granted a conditional waiver of the rule that prohibits encryption of the basic service tier to Cablevision with respect to Cablevision's New York City systems, which are all-digital. The Bureau based its decision on the fact that encryption of the basic service tier on Cablevision's all-digital systems would allow Cablevision to enable and disable cable service remotely. The Bureau also found that remote activation and deactivation of cable service would ''reduce[] costs for Cablevision, improve[] customer service, and reduce[] fuel consumption and CO_2 emissions.'' Remote activation and deactivation, the Bureau concluded, would reduce installation costs for Cablevision's subscribers and also benefit these subscribers by reducing the number of necessary service calls, as compared to unencrypted cable systems. The Bureau reasoned that Cablevision sufficiently addressed the problem of incompatibility with consumer electronics ''by providing basic-only subscribers with set-top boxes or CableCARDs without charge for significant periods of time.'' Finally, the Bureau also concluded that the waiver would ''provide an experimental benefit that could be valuable in the Commission's further assessment of the utility of the encryption rule,'' and therefore required Cablevision to file three reports detailing the effect of encryption on subscribers. Four cable operators have filed similar petitions for waiver with the Commission's Media Bureau since the release of the Cablevision Waiver, and we understand that additional cable operators plan to file in the absence of this proceeding.

8. We initiate this proceeding to determine whether the Commission's basic service tier encryption prohibition, which was adopted over 15 years ago, remains necessary to promote compatibility between digital cable service and consumer electronics equipment in all circumstances. In this regard, we note, as described above, that the video marketplace has changed significantly over this period. Specifically, most cable operators have updated their systems to provide bidirectional, digital signals in addition to analog service, and some cable operators, like RCN and BendBroadband, transmit only digital

signals and have eliminated analog service in all of their systems. Other operators, like Cablevision and Comcast, have eliminated analog service on certain systems and plan to eliminate analog service in all systems over the coming years. As discussed above, data from SNL Kagan indicates that over three-quarters of cable subscribers have at least one device in their home that can both demodulate and decrypt digital cable services. Furthermore, because the Commission incorporated the CableCARD standard into our rules in 2003, consumer electronics manufacturers can build digital cable ready devices that can access encrypted cable service without the need for a converter box. Given these marketplace and regulatory developments, we tentatively conclude that it is appropriate to allow basic service tier encryption for all-digital cable systems, subject to certain measures intended to ameliorate any potential harm to consumers in the short run. Our proposal is informed by the information garnered from Cablevision's first year of implementation under the Bureau's waiver conditions. Specifically, in its recently filed final report, Cablevision stated that basic service tier encryption led to a reduction of 2,763 truck rolls, and predicted that it eventually will perform over 70 percent of all deactivations remotely. In its waiver petition, Cablevision asserted that by reducing service calls it could reduce the environmental harms associated with use of gas-consuming, traffic-causing trucks. Furthermore, Cablevision reports that no subscribers filed complaints regarding encryption of the basic service tier, which suggests that with the appropriate consumer protection measures, encryption of the basic service tier in all-digital systems does not affect subscribers adversely. We believe that this evidence shows that, where cable operators undertake appropriate consumer protection measures, the costs of retaining this rule (e.g., the need to schedule service appointments whenever a consumer subscribes to or cancels cable service as well as the expense and effect of cable operators' trucks on traffic and the environment) outweigh the benefits of retaining it (e.g., ensuring the continued utility of devices with clear-QAM tuners). We seek comment on this tentative conclusion. Specifically, we seek comment on the costs and benefits to subscribers and cable operators associated with the basic service tier encryption rule as it applies to all-digital cable systems. We also invite comment on any environmental costs and benefits associated with the rule. Would elimination of the encryption ban benefit the environment through reduction in the gas consumption and traffic associated with truck rolls, and would those benefits outweigh any countervailing environmental effects, such as energy consumption from additional set-top boxes? To the extent feasible, commenters should quantify in dollars any asserted costs or benefits of the basic service tier encryption prohibition.

9. We propose to allow encryption of the basic service tier only with respect to all-digital systems, as remote activation and deactivation of cable service, and its attendant benefits, are only feasible in all-digital systems. We seek comment on the specific criteria that the Commission should use to determine what constitutes an all-digital cable system. For example, what if a system transmits nearly all of its channels solely in digital, but maintains a single, unencrypted analog channel to inform potential subscribers about how to subscribe to service? We seek comment also about digital cable services that are not QAM-based. Is it appropriate to include IP and other non-QAM digital cable services in the definition of an all-digital cable system for the purposes of the proposed rule revision? We also seek comment on whether the Commission should revise the encryption rule with respect to any hybrid (analog/digital) systems where basic service tier programming is provided digitally but the cable operator also continues to provide some analog service to its subscribers (which is the case in many cable systems today). Would revision of the encryption rule with respect to those systems have any attendant benefits given that remote activation and deactivation of cable service is not feasible in hybrid systems?

10. We further seek comment on whether our proposed rule would satisfy our regulatory obligations under section 624A of the Communications Act. Section 624A directs the Commission to issue regulations as necessary to assure compatibility between televisions and video cassette recorders and cable systems, consistent with the need to prevent theft of cable service, so that cable subscribers will be able to enjoy the full benefit of both the programming available on cable systems and the functions available on their televisions and video cassette recorders. Essentially, with section 624A, Congress sought to develop a ''plug and play'' compatibility regime. We note that while Congress specifically cited scrambling and encryption as an impediment to compatibility, it nonetheless directed the Commission to ''determine whether and, if so, under what circumstances to permit cable systems to scramble or encrypt signals or to restrict cable systems in the manner in which they encrypt or scramble signals.'' Section 624A further prohibits the Commission from limiting the use of scrambling or encryption technology where the use of such technology does not interfere with the functions of subscribers' television receivers or video cassette recorders. Based on section 624A, we believe the Commission has broad authority to address and regulate encryption technology within the parameters established by Congress.

11. We recognize that some subscribers of only the basic service tier currently access digital cable service without a CableCARD or converter box. We tentatively conclude that if the Commission allows cable operators to encrypt the basic service tier in all-digital systems, we should, at the same time, minimize any instances of incompatibility due to encryption of the basic service tier by implementing transitional measures for the limited universe of subscribers who currently access the unencrypted digital basic service tier without a set-top box. That is, we recognize that there are some consumers who currently are able to access the basic service tier without using a set-top box because of the current encryption prohibition. Accordingly, to mitigate any potential harm experienced by these consumers, we believe our rules should implement transitional measures to prevent consumers from having to purchase or lease new equipment immediately in order to continue accessing the basic service tier if their cable operators choose to encrypt this tier.

12. When the Media Bureau granted the waiver authorizing Cablevision to encrypt the basic service tier, it conditioned that waiver to limit the immediate costs that basic service tier subscribers would face on account of the need for additional equipment like set-top boxes to provide digital televisions equipped with clear QAM tuners access to basic service tier channels. Those conditions require Cablevision to offer ''(a) current basic-only subscribers up to two set-top boxes or CableCARDs without charge for up to two years, (b) digital subscribers who have an additional television set currently receiving basic-only service one set-top box or CableCARD without charge for one year, and (c) current qualified low-income basic-only subscribers up to two set-top boxes or

CableCARDs without charge for five years.'' We believe that similar measures are appropriate and necessary for purposes of relaxing the encryption ban because of the potential harm to basic-only subscribers who have come to rely on access to unencrypted basic-only service. A transition period will provide affected subscribers time to make informed choices about equipment and/or other alternatives available in their service area. We therefore propose that cable operators that choose to encrypt the basic service tier in their service area provide to subscribers, without charge for a limited time, devices that can decrypt the basic service tier as described above. We seek comment on this proposal.

13. Are the consumer protection measures we propose to adopt adequate to protect all subscribers of digital cable systems in all areas of the country? We seek comment on the number of subscribers that this rule change will affect. We also seek comment on an appropriate time frame for requiring cable operators to provide set-top boxes at no cost to current subscribers, and particularly with regard to low-income subscribers. Are the time frames established in the Cablevision proceeding appropriate to serve the goal of minimizing the immediate costs that basic subscribers and subscribers with additional sets receiving basic-only service face through this modification of the rules? In the context of the Cablevision waiver, the Media Bureau used receipt of Medicaid as an indicator of a current qualified low income basic-only subscriber. Does it make sense to do so in the context of this NPRM? We invite commenters to suggest other indicators to delineate what constitutes a current qualified low income basic-only subscriber. Are additional safeguards necessary and appropriate, and, if so, what are these safeguards? Would an interim 7-year time period or longer be more consistent with ensuring there is not an economic hardship on low-income subscribers who prior to the potential relaxing of the encryption ban would not have needed additional equipment? We seek comment on any other measures the Commission should take to protect subscribers if we decide to relax the prohibition on encryption of the basic service tier for all-digital cable systems.

14. Although we propose to relax the encryption ban for all-digital systems, our proposal does not require cable operators operating those systems to encrypt the basic service tier. Rather, our proposed rule permits cable operators to encrypt this tier provided that they offer free set-top boxes to basic-only subscribers for a limited period of time. Because cable operators may decide whether they wish to encrypt under the requisite regulatory conditions (i.e., provide set-top boxes at no cost to affected subscribers for a limited period), we see no statutory or constitutional constraints to imposing such a requirement. In that regard, we note that the proposed regulatory conditions would be implemented pursuant to our authority under sections 624A, not as a rate regulation prescribed under section 623(b) of the Act. Accordingly, we do not believe section 623(b)(3)(A)'s requirement to base on actual cost any price or rate standards for equipment installation and leasing would bar the Commission from imposing the set-top box condition for relaxing the encryption prohibition. We seek comment on this analysis.

15. *Ex Parte Presentations.* The proceeding this NPRM initiates shall be treated as a ''permit-but-disclose'' proceeding in accordance with the Commission's ex parte rules. Persons making ex parte presentations must file a copy of any written presentation or a memorandum summarizing any oral presentation within two business days after the presentation (unless a different deadline applicable to the Sunshine period applies). Persons making oral ex parte presentations are reminded that memoranda summarizing the presentation must (1) list all persons attending or otherwise participating in the meeting at which the ex parte presentation was made, and (2) summarize all data presented and arguments made during the presentation. If the presentation consisted in whole or in part of the presentation of data or arguments already reflected in the presenter's written comments, memoranda or other filings in the proceeding, the presenter may provide citations to such data or arguments in his or her prior comments, memoranda, or other filings (specifying the relevant page and/or paragraph numbers where such data or arguments can be found) in lieu of summarizing them in the memorandum. Documents shown or given to Commission staff during ex parte meetings are deemed to be written ex parte presentations and must be filed consistent with § 1.1206(b) of the Commission's rules. In proceedings governed by § 1.49(f) of the Commission's rules or for which the Commission has made available a method of electronic filing, written ex parte presentations and memoranda summarizing oral ex parte presentations, and all attachments thereto, must be filed through the electronic comment filing system available for that proceeding, and must be filed in their native format (e.g., .doc, .xml, .ppt, searchable .pdf). Participants in this proceeding should familiarize themselves with the Commission's ex parte rules.

16. *Initial Regulatory Flexibility Analysis.* The Regulatory Flexibility Act of 1980, as amended (RFA), requires that a regulatory flexibility analysis be prepared for notice and comment rule making proceedings, unless the agency certifies that ''the rule will not, if promulgated, have a significant economic impact on a substantial number of small entities.'' The RFA generally defines the term ''small entity'' as having the same meaning as the terms ''small business,'' ''small organization,'' and ''small governmental jurisdiction.'' In addition, the term ''small business'' has the same meaning as the term ''small business concern'' under the Small Business Act. A ''small business concern'' is one which: (1) Is independently owned and operated; (2) is not dominant in its field of operation; and (3) satisfies any additional criteria established by the Small Business Administration (SBA).

17. With respect to this NPRM, an Initial Regulatory Flexibility Analysis (*IRFA*) under the Regulatory Flexibility Act is contained below. Written public comments are requested in the IFRA, and must be filed in accordance with the same filing deadlines as comments on the NPRM, with a distinct heading designating them as responses to the *IRFA.* The Commission will send a copy of this NPRM, including the *IRFA,* in a report to Congress pursuant to the Congressional Review Act. In addition, a copy of this NPRM and the *IRFA* will be sent to the Chief Counsel for Advocacy of the SBA, and will be published in the **Federal Register**.

18. *Initial Paperwork Reduction Act of 1995 Analysis Paperwork Reduction Act Analysis.* This document does not contain proposed information collection requirements subject to the Paperwork Reduction Act of 1995, Public Law 104–13. In addition, therefore, it does not contain any proposed information collection burden for small business concerns with fewer than 25 employees, pursuant to the Small Business Paperwork Relief Act of 2002, Public Law 107–198, see 44 U.S.C. 3506(c)(4).

19. *Comment Filing Procedures.* Pursuant to §§ 1.415 and 1.419 of the Commission's rules, 47 CFR 1.415 and 1.419, interested parties may file comments and reply comments on or before the dates indicated on the first page of this document. Comments may be filed using the Commission's

Electronic Comment Filing System (ECFS). See Electronic Filing of Documents in Rulemaking Proceedings, 63 FR 24121 (1998).

20. Electronic Filers: Comments may be filed electronically using the Internet by accessing the ECFS: *http://fjallfoss.fcc.gov/ecfs2/.*

21. Paper Filers: Parties who choose to file by paper must file an original and one copy of each filing. If more than one docket or rulemaking number appears in the caption of this proceeding, filers must submit two additional copies for each additional docket or rulemaking number. Filings can be sent by hand or messenger delivery, by commercial overnight courier, or by first-class or overnight U.S. Postal Service mail. All filings must be addressed to the Commission's Secretary, Office of the Secretary, Federal Communications Commission. All hand-delivered or messenger-delivered paper filings for the Commission's Secretary must be delivered to FCC Headquarters at 445 12th St., SW., Room TW–A325, Washington, DC 20554. The filing hours are 8 a.m. to 7 p.m. All hand deliveries must be held together with rubber bands or fasteners. Any envelopes and boxes must be disposed of before entering the building. Commercial overnight mail (other than U.S. Postal Service Express Mail and Priority Mail) must be sent to 9300 East Hampton Drive, Capitol Heights, MD 20743. U.S. Postal Service first-class, Express, and Priority mail must be addressed to 445 12th Street, SW., Washington DC, 20554.

22. People with Disabilities: To request materials in accessible formats for people with disabilities (braille, large print, electronic files, audio format), send an email to *fcc504@fcc.gov* or call the Consumer & Governmental Affairs Bureau at (202) 418–0530 (voice), (202) 418–0432 (tty).

23. Additional Information: For additional information on this proceeding, please contact Brendan Murray of the Media Bureau, Policy Division, *Brendan.Murray@fcc.gov,* (202) 418–1573.

24. Accordingly, *it is ordered* that, pursuant to the authority contained in sections 1, 4(i), 4(j), 303(r), 403, and 624A of the Communications Act of 1934, as amended, 47 U.S.C. sections 151, 154(i), 154(j), 303(r), 403, and 544a, this Notice of Proposed Rulemaking is *adopted.*

25. As required by the Regulatory Flexibility Act of 1980, as amended (RFA) the Commission has prepared this Initial Regulatory Flexibility Analysis (IRFA) of the possible significant economic impact on small entities by the policies and rules proposed in this NPRM. Written public comments are requested on this IRFA. Comments must be identified as responses to the IRFA and must be filed by the deadlines for comments on the NPRM provided above. The Commission will send a copy of the NPRM, including this IRFA, to the Chief Counsel for Advocacy of the Small Business Administration. In addition, the NPRM and IRFA (or summaries thereof) will be published in the **Federal Register**.

26. *Need for, and Objectives of the Proposed Rules.* With this NPRM, the Commission seeks comment on elimination of the basic service tier encryption prohibition for all-digital cable systems.The need for FCC regulation in this area derives from changing technology in the cable services market. When the Commission adopted technical rules in the 1990s, digital cable service was in its infancy, and therefore the rules were adopted with analog cable service in mind. Today, digital cable service is common, and certain technical rules related to cable service do not translate well. Therefore, the Commission proposes to allow all-digital cable operators to encrypt the basic service tier.

27. *Legal Basis.* The authority for the action proposed in this rulemaking is contained in sections 1, 4(i) and (j), 303, 403, 601, 624, and 624A of the Communications Act of 1934, as amended, 47 U.S.C. 151, 154(i) and (j), 303, 403, 521, 544, and 544a.

28. *Description and Estimate of the Number of Small Entities to Which the Proposed Rules Will Apply.* The RFA directs the Commission to provide a description of and, where feasible, an estimate of the number of small entities that will be affected by the proposed rules. The RFA generally defines the term ''small entity'' as having the same meaning as the terms ''small business,'' ''small organization,'' and ''small governmental entity'' under section 3 of the Small Business Act. In addition, the term ''small business'' has the same meaning as the term ''small business concern'' under the Small Business Act. A small business concern is one which: (1) Is independently owned and operated; (2) is not dominant in its field of operation; and (3) satisfies any additional criteria established by the Small Business Administration (''SBA'').

29. *Wired Telecommunications Carriers.* The 2007 North American Industry Classification System (NAICS) defines ''Wired Telecommunications Carriers'' as follows: ''This industry comprises establishments primarily engaged in operating and/or providing access to transmission facilities and infrastructure that they own and/or lease for the transmission of voice, data, text, sound, and video using wired telecommunications networks. Transmission facilities may be based on a single technology or a combination of technologies. Establishments in this industry use the wired telecommunications network facilities that they operate to provide a variety of services, such as wired telephony services, including VoIP services; wired (cable) audio and video programming distribution; and wired broadband Internet services. By exception, establishments providing satellite television distribution services using facilities and infrastructure that they operate are included in this industry.'' The SBA has developed a small business size standard for wireline firms within the broad economic census category, ''Wired Telecommunications Carriers.'' Under this category, the SBA deems a wireline business to be small if it has 1,500 or fewer employees. Census Bureau data for 2002 show that there were 2,432 firms in this category that operated for the entire year. Of this total, 2,395 firms had employment of 999 or fewer employees, and 37 firms had employment of 1,000 employees or more. Thus, under this category and associated small business size standard, the majority of firms can be considered small.

30. *Wired Telecommunications Carriers—Cable and Other Program Distribution.* This category includes, among others, cable operators, direct broadcast satellite (DBS) services, home satellite dish (HSD) services, satellite master antenna television (SMATV) systems, and open video systems (OVS). The data we have available as a basis for estimating the number of such entities were gathered under a superseded SBA small business size standard formerly titled Cable and Other Program Distribution. The former Cable and Other Program Distribution category is now included in the category of Wired Telecommunications Carriers, the majority of which, as discussed above, can be considered small. According to Census Bureau data for 2002, there were a total of 1,191 firms in this previous category that operated for the entire year. Of this total, 1,087 firms had annual receipts of under $10 million, and 43 firms had receipts of $10 million or more but less than $25 million. Thus, we believe that a substantial number of entities included in the former Cable and Other Program Distribution category may have been categorized as small entities under the now superseded SBA small business size standard for Cable

and Other Program Distribution. With respect to OVS, the Commission has approved approximately 120 OVS certifications with some OVS operators now providing service. Broadband service providers (BSPs) are currently the only significant holders of OVS certifications or local OVS franchises, even though OVS is one of four statutorily-recognized options for local exchange carriers (LECs) to offer video programming services. As of June 2006, BSPs served approximately 1.4 million subscribers, representing 1.46 percent of all MVPD households. Among BSPs, however, those operating under the OVS framework are in the minority. The Commission does not have financial information regarding the entities authorized to provide OVS, some of which may not yet be operational. We thus believe that at least some of the OVS operators may qualify as small entities.

31. *Cable System Operators (Rate Regulation Standard).* The Commission has also developed its own small business size standards for the purpose of cable rate regulation. Under the Commission's rules, a ''small cable company'' is one serving 400,000 or fewer subscribers nationwide. As of 2006, 7,916 cable operators qualify as small cable companies under this standard. In addition, under the Commission's rules, a ''small system'' is a cable system serving 15,000 or fewer subscribers. Industry data indicate that 6,139 systems have under 10,000 subscribers, and an additional 379 systems have 10,000–19,999 subscribers. Thus, under this standard, most cable systems are small.

32. *Cable System Operators (Telecom Act Standard).* The Communications Act of 1934, as amended, also contains a size standard for small cable system operators, which is ''a cable operator that, directly or through an affiliate, serves in the aggregate fewer than 1 percent of all subscribers in the United States and is not affiliated with any entity or entities whose gross annual revenues in the aggregate exceed $250,000,000.'' There are approximately 65.3 million cable subscribers in the United States today. Accordingly, an operator serving fewer than 654,000 subscribers shall be deemed a small operator, if its annual revenues, when combined with the total annual revenues of all its affiliates, do not exceed $250 million in the aggregate. Based on available data, we find that the number of cable operators serving 654,000 subscribers or less totals approximately 7,916. We note that the Commission neither requests nor collects information on whether cable system operators are affiliated with entities whose gross annual revenues exceed $250 million. Although it seems certain that some of these cable system operators are affiliated with entities whose gross annual revenues exceed $250,000,000, we are unable at this time to estimate with greater precision the number of cable system operators that would qualify as small cable operators under the definition in the Communications Act.

33. *Cable and Other Subscription Programming.* The Census Bureau defines this category as follows: ''This industry comprises establishments primarily engaged in operating studios and facilities for the broadcasting of programs on a subscription or fee basis * * * . These establishments produce programming in their own facilities or acquire programming from external sources. The programming material is usually delivered to a third party, such as cable systems or direct-to-home satellite systems, for transmission to viewers.'' The SBA has developed a small business size standard for firms within this category, which is all firms with $15 million or less in annual receipts. According to Census Bureau data for 2002, there were 270 firms in this category that operated for the entire year. Of this total, 217 firms had annual receipts of under $10 million and 13 firms had annual receipts of $10 million to $24,999,999. Thus, under this category and associated small business size standard, the majority of firms can be considered small.

34. *Computer Terminal Manufacturing.* ''Computer terminals are input/output devices that connect with a central computer for processing.'' The SBA has developed a small business size standard for this category of manufacturing; that size standard is 1,000 or fewer employees. According to Census Bureau data, there were 71 establishments in this category that operated with payroll during 2002, and all of the establishments had employment of under 1,000. Consequently, we estimate that all of these establishments are small entities.

35. *Other Computer Peripheral Equipment Manufacturing.* Examples of peripheral equipment in this category include keyboards, mouse devices, monitors, and scanners. The SBA has developed a small business size standard for this category of manufacturing; that size standard is 1,000 or fewer employees. According to Census Bureau data, there were 860 establishments in this category that operated with payroll during 2002. Of these, 851 had employment of under 1,000, and an additional five establishments had employment of 1,000 to 2,499. Consequently, we estimate that the majority of these establishments are small entities.

36. *Audio and Video Equipment Manufacturing.* These establishments manufacture ''electronic audio and video equipment for home entertainment, motor vehicle, public address and musical instrument amplifications.'' The SBA has developed a small business size standard for this category of manufacturing; that size standard is 750 or fewer employees. According to Census Bureau data, there were 571 establishments in this category that operated with payroll during 2002. Of these, 560 had employment of under 500, and ten establishments had employment of 500 to 999. Consequently, we estimate that the majority of these establishments are small entities.

37. *Description of Reporting, Recordkeeping and Other Compliance Requirements.* The rules proposed in the *NPRM* will not impose additional reporting, recordkeeping, and compliance requirements on cable operators.

38. *Steps Taken To Minimize Significant Impact on Small Entities, and Significant Alternatives Considered.* The RFA requires an agency to describe any significant alternatives that it has considered in reaching its proposed approach, which may include the following four alternatives (among others): (1) The establishment of differing compliance or reporting requirements or timetables that take into account the resources available to small entities; (2) the clarification, consolidation, or simplification of compliance or reporting requirements under the rule for small entities; (3) the use of performance, rather than design, standards; and (4) an exemption from coverage of the rule, or any part thereof, for small entities.

39. As indicated above, the NPRM seeks comment on elimination of the basic service tier encryption prohibition for all-digital cable systems. The Commission considered leaving the current rule in place. The Commission tentatively concludes, however, that an exemption of the rule for all-digital cable systems could reduce the service calls that a cable operator must perform, and therefore the Commission believes that this proposed rule change will reduce burdens on small entities.

40. We welcome comments that suggest modifications of any proposal if based on evidence of potential differential impact on smaller entities. In addition, the Regulatory Flexibility

Act requires agencies to seek comment on possible small entity-related alternatives, as noted above. We therefore seek comment on alternatives to the proposed rules that would assist small entities while ensuring improved customer support by cable operators for digital cable products purchased at retail.

41. *Federal Rules Which Duplicate, Overlap, or Conflict with the Commission's Proposals.* None.

List of Subjects in 47 CFR Part 76

Administrative practice and procedure, Cable television, Equal employment opportunity, Political candidates, Reporting and recordkeeping requirements.

Federal Communications Commission.

Marlene H. Dortch,

Secretary.

Rule Changes

For the reasons discussed in the preamble, the Federal Communications Commission proposes to amend 47 CFR Part 76 as follows:

PART 76—MULTICHANNEL VIDEO AND CABLE TELEVISION SERVICE

1. The authority citation for part 76 continues to read as follows:

Authority: 47 U.S.C. 151, 152, 153, 154, 301, 302, 302a, 303, 303a, 307, 308, 309, 312, 315, 317, 325, 339, 340, 341, 503, 521, 522, 531, 532, 534, 535, 536, 537, 543, 544, 544a, 545, 548, 549, 552, 554, 556, 558, 560, 561, 571, 572, 573.

2. Section 76.630 is amended by revising paragraph (a) and Note 1 and 2 to read as follows:

§ 76.630 Compatibility with consumer electronics equipment.

(a) Cable system operators shall not scramble or otherwise encrypt signals carried on the basic service tier.

(1) This prohibition shall not apply in systems in which:

(i) No television signals are provided using the NTSC system; and

(ii) The cable operator offers to its existing basic service tier subscribers (who do not use a set-top box or CableCARD at the time of encryption) the equipment necessary to descramble or decrypt the basic service tier signals (the subscriber's choice of a set-top box or CableCARD) on up to two separate television sets without charge for two years from the date of encryption; and

(iii) The cable operator offers to its existing digital subscribers who have an additional television set currently receiving basic-only service without a set-top box, the equipment necessary to descramble or decrypt the basic service tier signals on one television set without charge for one year from the date of encryption; and

(iv) The cable operator offers to all existing basic-only subscribers who receive Medicaid the equipment necessary to descramble or decrypt the basic service tier signals on up to two separate television sets without charge for five years from the date of encryption.

(2) Requests for waivers of this prohibition must demonstrate either a substantial problem with theft of basic tier service or a strong need to scramble basic signals for other reasons. As part of this showing, cable operators are required to notify subscribers by mail of waiver requests. The notice to subscribers must be mailed no later than thirty calendar days from the date the request for waiver was filed with the Commission, and cable operators must inform the Commission in writing, as soon as possible, of that notification date. The notification to subscribers must state: On (date of waiver request was filed with the Commission), (cable operator's name) filed with the Federal Communications Commission a request for waiver of the rule prohibiting scrambling of channels on the basic tier of service. 47 CFR 76.630(a). The request for waiver states (a brief summary of the waiver request). A copy of the request for waiver shall be available for public inspection at (the address of the cable operator's local place of business).

(3) Individuals who wish to comment on this request for waiver should mail comments to the Federal Communications Commission by no later than 30 days from (the date the notification was mailed to subscribers). Those comments should be addressed to the: Federal Communications Commission, Media Bureau, Washington, DC 20554, and should include the name of the cable operator to whom the comments are applicable. Individuals should also send a copy of their comments to (the cable operator at its local place of business). Cable operators may file comments in reply no later than 7 days from the date subscriber comments must be filed.

* * * * *

Note 1 to § 76.630: 47 CFR 76.1621 contains certain requirements pertaining to a cable operator's offer to supply subscribers with special equipment that will enable the simultaneous reception of multiple signals.

Note 2 to § 76.630: 47 CFR 76.1622 contains certain requirements pertaining to the provision of a consumer education program on compatibility matters to subscribers.

* * * * *

[FR Doc. 2011–27743 Filed 10–26–11; 8:45 am]

BILLING CODE 6712–01–P

DEPARTMENT OF COMMERCE

National Oceanic and Atmospheric Administration

50 CFR Part 622

RIN 0648–AY56

Fisheries of the Caribbean, Gulf of Mexico, and South Atlantic; Reef Fish Fishery of the Gulf of Mexico; Amendment 32

AGENCY: National Marine Fisheries Service (NMFS), National Oceanic and Atmospheric Administration (NOAA), Commerce.

ACTION: Notice of availability; request for comments.

SUMMARY: The Gulf of Mexico Fishery Management Council (Council) has submitted Amendment 32 to the Fishery Management Plan for the Reef Fish Resources of the Gulf of Mexico (FMP) for review, approval, and implementation by NMFS. Amendment 32 proposes to implement a 10-year rebuilding plan for gag; revise the annual catch limits (ACLs) and accountability measures (AMs) for gag, red grouper, and shallow-water grouper (SWG); revise recreational annual catch targets (ACTs) for gag and red grouper; implement a 4-month gag recreational season; adjust the commercial quota for gag and SWG for 2012 through 2015 and subsequent fishing years; adjust multi-use individual fishing quota (IFQ) shares for gag and red grouper; and implement a 22-inch (56-cm) commercial minimum size limit for gag. The intent of Amendment 32 is to end overfishing of gag, allow the gag stock to rebuild, and constrain the harvest of red grouper consistent with the requirements of the Magnuson-Stevens Fishery Conservation and Management Act (Magnuson-Stevens Act).

DATES: Written comments must be received on or before December 27, 2011.

ADDRESSES: You may submit comments on the amendment identified by ''NOAA–NMFS–2011–0135'' by any of the following methods:

• *Electronic submissions:* Submit electronic comments via the Federal e-Rulemaking Portal: *http://www.regulations.gov.* Follow the instructions for submitting comments.

• *Mail:* Peter Hood, Southeast Regional Office, NMFS, 263 13th Avenue South, St. Petersburg, FL 33701.

Instructions: All comments received are a part of the public record and will generally be posted to *http://www.regulations.gov* without change. All Personal Identifying Information (for example, name, address, etc.) voluntarily submitted by the commenter may be publicly accessible. Do not submit Confidential Business Information or otherwise sensitive or protected information.

To submit comments through the Federal e-Rulemaking Portal: *http://www.regulations.gov,* click on ''submit a comment,'' then enter ''NOAA–NMFS–2011–0135'' in the keyword search and click on ''search.'' To view posted comments during the comment period, enter ''NOAA–NMFS–2011–0135'' in the keyword search and click on ''search.'' NMFS will accept anonymous comments (enter N/A in the required field if you wish to remain anonymous). You may submit attachments to electronic comments in Microsoft Word, Excel, WordPerfect, or Adobe PDF file formats only.

Comments through means not specified in this notice of availability will not be accepted.

Electronic copies of Amendment 32 may be obtained from the Southeast Regional Office Web Site at *http://sero.nmfs.noaa.gov.*

FOR FURTHER INFORMATION CONTACT: Peter Hood, Southeast Regional Office, NMFS, telephone 727–824–5305; e-mail: *Peter.Hood@noaa.gov.*

SUPPLEMENTARY INFORMATION: The Magnuson-Stevens Act requires each Regional Fishery Management Council to submit any fishery management plan or amendment to NMFS for review and approval, disapproval, or partial approval. The Magnuson-Stevens Act also requires that NMFS, upon receiving a plan or amendment, publish an announcement in the **Federal Register** notifying the public that the plan or amendment is available for review and comment.

Background

The Magnuson-Stevens Act requires NMFS and regional fishery management councils to prevent overfishing and achieve, on a continuing basis, the optimum yield (OY) from federally managed fish stocks. These mandates are intended to ensure fishery resources are managed for the greatest overall benefit to the nation, particularly with respect to providing food production and recreational opportunities, and protecting marine ecosystems. To further this goal, the Magnuson-Stevens Act requires fishery managers to specify their strategy to rebuild overfished stocks to a sustainable level within a certain time frame, and to minimize bycatch and bycatch mortality to the extent practicable. The reauthorized Magnuson-Stevens Act, as amended through January 12, 2007, requires the councils to establish ACLs for each stock/stock complex and AMs to ensure these ACLs are not exceeded. Amendment 32 addresses these requirements for gag, red grouper, and the SWG complex.

Status of Stocks

Southeast Data, Assessment, and Review (SEDAR) stock assessment updates were conducted for gag and red grouper in 2009. For gag, the assessment indicated the gag stock was both overfished and undergoing overfishing. The Council was informed of this status determination in August of 2009. Until Amendment 32 could be completed, the Council requested and NMFS implemented a series of temporary rules to control harvest. For 2011, the gag commercial quota is 430,000 lb (195,045 kg) and the gag recreational season is from September 16 through November 15 (76 FR 31874, June 2, 2011). This most recent temporary rule became effective June 1, 2011.

For red grouper, a 2009 SEDAR assessment update indicated that although the stock continues to be neither overfished nor undergoing overfishing, the stock has declined since 2005. After reviewing a rerun of the assessment update completed in late 2010, the SSC recommended that the overfishing limit for red grouper be set at 8.10 million lb (3.67 million kg) (the equilibrium yield at F_{MSY} (the fishing mortality associated with harvesting the maximum sustainable yield) and the allowable biological catch (ABC) be set at 7.93 million lb (3.60 million kg) (the equilibrium yield at F_{OY}). For 2011, the SSC recommended the harvest could be increased to 6.88 million lb (3.12 million kg). A 2011 regulatory amendment is in the process of being implemented to set total allowable catch (TAC) at 6.88 million lb (3.12 million kg) for 2011, and increase the red grouper TAC and commercial quota annually through 2015. The proposed rule to implement this regulatory amendment published on September 21, 2011 (76 FR 58455) and the final rule is currently being developed.

Actions Contained in Amendment 32

Gag Rebuilding Plan

The Council selected a 10-year rebuilding plan in Amendment 32 for gag. This is the maximum time frame allowed under the requirements of the Magnuson-Stevens Act. However, because the Council intends to manage the stock using the F_{OY} yield stream (based on protocols from Amendment 30B), the stock is projected to be rebuilt in 7 years. Given management uncertainties and uncertainties regarding stock assessment projections more than a few years in the future, a 10-year rebuilding plan would allow for fluctuations in catches and provide leeway to account for the needs of fishing communities when setting catch levels and management measures.

ACLs and ACTs

Based on the SSC's recommendations for ABCs for gag and red grouper, Amendment 32 would establish sector-specific ACLs and ACTs for each species based on the allocation ratios assigned for the commercial and recreational sectors. The allocation of gag between the commercial and recreational sectors is 39 percent and 61 percent, respectively. Amendment 32 would implement sector-specific ACLs, which when combined would equal to the SSCs recommended ABCs. The sector-specific ACTs for gag are based on the F_{OY} yield stream which provides lower annual yields than the $F_{rebuild}$ yields used to determine the ABC and resulting sector ALCs. This results in sector-specific ACTs less than the ACLs, and helps ensure the sector-specific ACLs are not exceeded. Recreational landings would be evaluated relative to the ACL based on a moving multi-year average of landings, as described in the FMP. Commercial ACTs are similarly reduced from the commercial ACL because the management strategy follows F_{OY} yield streams. However, due to the limited amount of gag IFQ allocation available for harvest in the initial years of the gag rebuilding plan, gag bycatch and discards from fishermen targeting red grouper or other fish may be higher than assumed in the assessment projections. Therefore, the Council determined the commercial gag quota should be reduced from the ACT by 14 percent to account for additional dead discards not accounted for in the assessment analyses.

For red grouper, sector-specific ACLs are based on the current 76 percent commercial and 24 percent recreational allocation ratio. The commercial quota (ACT) is being established through a separate rulemaking, the 2011 red

grouper regulatory amendment, which is expected to be effective prior to the implementation of Amendment 32. Amendment 32 would adjust the recreational ACL and ACT in a method similar to the one used for gag. Recreational landings would be evaluated relative to the ACL based on a moving multi-year average of landings, as described in the FMP.

Because the commercial SWG ACL is the sum of the commercial gag and red grouper ACLs, Amendment 32 would adjust the commercial SWG ACL. Similarly, reductions in the gag quota correspond to reductions in the SWG quota. Therefore, Amendment 32 would adjust the commercial SWG quota.

AMs

Amendment 32 proposes to modify the AMs for gag, red grouper, and SWG. AMs are intended to prevent ACLs from being exceeded or mitigate future harvests after ACLs have been exceeded. For the commercial sector, the current AMs were implemented through Amendment 30B to the FMP (74 FR 17603, April 16, 2009), before red grouper, gag and SWG were managed under an IFQ program. Therefore, the current AMs would be triggered if the sector exceeds the respective species' quota. However, the IFQ program Gulf groupers and tilefishes acts as an AM because the overall quota is divided among shareholders and the program includes controls that do not allow shareholders to exceed their individual allocation of the quota. To reduce redundancy in the commercial AMs, Amendment 32 proposes to eliminate the quota-based AM in favor of the existing IFQ program.

Current recreational AMs for gag and red grouper include restricting future increases in harvest and shortened subsequent seasons, should an ACL be exceeded. However, AMs have no provisions for handling overages or in-season adjustments as authorized under the National Standard 1 guidelines (74 FR 3178, January 16, 2009). Amendment 32 proposes to add an overage adjustment and in-season recreational AMs for gag and red grouper. Should gag or red grouper be in a rebuilding plan and the sector ACL is exceeded, the overage adjustment would be equal to the full amount of the overage, unless the best scientific information available shows that a greater, lesser, or no overage adjustment is needed to mitigate the effects of the overage. In addition, Amendment 32 proposes that if gag or red grouper landings are projected to exceed the ACL, as estimated by the Southeast Fisheries Science Center (SEFSC), without regard to overfished status, the AA would file a notification closing the recreational harvest for the species projected to reach its ACL for the rest of the fishing year on the date the ACL is projected to be harvested.

In addition to these AMs, Amendment 32 proposes an AM for recreational red grouper that incorporates an adaptive management approach should the recreational sector exceed its ACL. The Council has submitted a red grouper regulatory amendment for Secretarial approval, and NMFS has published a proposed rule (September 21, 2011, 76 FR 58455) that includes a red grouper bag limit increase from two to four fish, within the four-fish aggregate grouper bag limit. The adaptive management AM proposed in Amendment 32 would reduce the bag limit from four fish to three fish if, at the end of any season, it is determined that the recreational sector has exceeded the recreational red grouper ACL. The bag limit would be reduced from three fish to two fish if, at the end of any subsequent season, it is determined that the recreational sector has exceeded its ACL again. The minimum bag limit for red grouper would remain at two fish, regardless if the recreational sector exceeded the ACL in subsequent fishing years.

Other Commercial Management Measures

To allow for flexibility and to account for varying gag to red grouper quota ratios across the Gulf in the commercial grouper-tilefish IFQ program, at the beginning of each fishing year a percentage of the gag and red grouper allocation is designated as multi-use allocation, valid for harvesting either gag or red grouper. Currently, 4 percent of the red grouper allocation and 8 percent of the gag allocation are designated as multi-use allocation. However, under the red grouper and gag ACLs proposed in Amendment 32, the current multi-use allocations could result in commercial harvest of red grouper or gag exceeding its sector ACL. To prevent this from occurring, Amendment 32 proposes that if a stock is not under a rebuilding plan, the respective multi-use allocation would be based on the difference between the ACL and the ACT. If a stock is under a rebuilding plan, as with gag, then no multi-use allocation would be set aside. Therefore, red grouper multi-use allocation would be set to zero if gag is under a rebuilding plan. The equations used to determine multi-use allocation for gag and red grouper are as follows:

Gag Multi-use (in percent) = 100*[Red Grouper ACL—Red Grouper Allocation]/Gag Allocation.

Red Grouper Multi-use (in percent) = 100*[Gag ACL—Gag Allocation]/Red Grouper Allocation.

National Standard 9 dictates bycatch and the mortality of unavoidable bycatch should be minimized to the extent practicable. Because the commercial sector fishes in deeper waters on average than the recreational sector, it has a higher discard mortality rate. One possible way to reduce gag regulatory dead discards is to reduce the commercial minimum size limit so that gag that would have been discarded can be retained. To reduce gag discards, Amendment 32 would reduce the minimum size limit of gag from 24 inches (61 cm) to 22 inches (56 cm) TL. This change could reduce discards by approximately 30 percent, and would have the advantage of simplifying enforcement by having a single gag size limit for both sectors.

Other Recreational Management Measures

In selecting a recreational management strategy, the Council favored achieving the longest practicable fishing season for gag, while maintaining the current size and bag limits and constraining harvest to the ACT. Therefore, Amendment 32 proposes to set the gag fishing season from June 1 through October 31. The current two-gag bag limit within the four-fish grouper aggregate bag limit and 22-inch (56-cm) TL minimum size limit will remain unchanged.

Proposed Rule for Amendment 32

A proposed rule that would implement Amendment 32 has been drafted. In accordance with the Magnuson-Stevens Act, NMFS is evaluating Amendment 32 to determine whether it is consistent with the FMP, the Magnuson-Stevens Act, and other applicable law. If the determination is affirmative, NMFS will publish the proposed rule in the **Federal Register** for public review and comment.

Consideration of Public Comments

The Council submitted Amendment 32 for Secretarial review, approval, and implementation. NMFS' decision to approve, partially approve, or disapprove Amendment 32 will be based, in part, on consideration of comments, recommendations, and information received during the comment period on this notice of availability.

Public comments received by 5 p.m. eastern time, on December 27, 2011,

will be considered by NMFS in the approval/disapproval decision regarding Amendment 32.

Authority: 16 U.S.C. 1801 *et seq.*

Dated: October 24, 2011.

Steven Thur,

Acting Director, Office of Sustainable Fisheries, National Marine Fisheries Service.

[FR Doc. 2011–27853 Filed 10–26–11; 8:45 am]

BILLING CODE 3510–22–P

DEPARTMENT OF COMMERCE

National Oceanic and Atmospheric Administration

50 CFR Part 622

[Docket No. 100120037–1626–01]

RIN 0648–AY55

Fisheries of the Caribbean, Gulf of Mexico, and South Atlantic; Amendments to the Queen Conch and Reef Fish Fishery Management Plans of Puerto Rico and the U.S. Virgin Islands

AGENCY: National Marine Fisheries Service (NMFS), National Oceanic and Atmospheric Administration (NOAA), Commerce.

ACTION: Proposed rule; request for comments.

SUMMARY: NMFS proposes to implement Amendment 2 to the Fishery Management Plan for Queen Conch Resources of Puerto Rico and the U.S. Virgin Islands and Amendment 5 to the Fishery Management Plan for the Reef Fish Fishery of Puerto Rico and the U.S. Virgin Islands (Amendments 2 and 5), prepared by the Caribbean Fishery Management Council (Council). This proposed rule would: establish annual catch limits (ACLs) and accountability measures (AMs) for queen conch and for all reef fish units or complexes that are classified as undergoing overfishing or that contain sub-units which are classified as undergoing overfishing (*i.e.,* snapper, grouper and parrotfish); allocate ACLs among island management areas and, in Puerto Rico only, among commercial and recreational sectors; revise the composition of the snapper and grouper complexes; prohibit fishing for and possession of three parrotfish species; establish recreational bag limits for snappers, groupers, and parrotfishes; and establish framework procedures for queen conch and reef fish species. Amendments 2 and 5 would also revise management reference points and status determination criteria for queen conch, snappers, groupers, and parrotfishes. The intended effect of the rule is to prevent overfishing of queen conch and reef fish species while maintaining catch levels consistent with achieving optimum yield (OY).

DATES: Written comments must be received on or before November 18, 2011.

ADDRESSES: You may submit comments on the proposed rule identified by ''NOAA–NMFS–2010–0028,'' by any of the following methods:

- *Electronic Submissions:* Submit all electronic public comments via the Federal e-Rulemaking Portal: *http://www.regulations.gov.* Follow the instructions for submitting comments.
- *Mail:* Bill Arnold, Southeast Regional Office, NMFS, 263 13th Avenue South, St. Petersburg, FL 33701.

Instructions: All comments received are a part of the public record and will generally be posted to *http://www.regulations.gov* without change. All Personal Identifying Information (for example, name, address, etc.) voluntarily submitted by the commenter may be publicly accessible. Do not submit Confidential Business Information or otherwise sensitive or protected information.

To submit comments through the Federal e-Rulemaking Portal: *http://www.regulations.gov,* click on ''submit a comment,'' then enter ''NOAA–NMFS–2010–0028'' in the keyword search and click on ''search.'' To view posted comments during the comment period, enter ''NOAA–NMFS–2010–0028'' in the keyword search and click on ''search.'' NMFS will accept anonymous comments (enter N/A in the required fields if you wish to remain anonymous). You may submit attachments to electronic comments in Microsoft Word, Excel, WordPerfect, or Adobe PDF file formats only.

Comments received through means not specified in this rule will not be considered.

Electronic copies of Amendments 2 and 5, which include an Environmental Impact Statement (EIS), an initial regulatory flexibility analysis (IRFA), a regulatory impact review, and a fishery impact statement may be obtained from the Southeast Regional Office Web site at *http://sero.nmfs.noaa.gov/sf/sf.htm.*

FOR FURTHER INFORMATION CONTACT: Bill Arnold, Southeast Regional Office, NMFS, telephone: 727–824–5305, e-mail: *Bill.Arnold@noaa.gov.*

SUPPLEMENTARY INFORMATION: In the exclusive economic zone (EEZ) of the U.S. Caribbean, the queen conch fishery is managed under the Fishery Management Plan (FMP) for Queen Conch Resources of Puerto Rico and the U.S. Virgin Islands (USVI), and the reef fish fishery is managed under the Reef Fish Fishery Management Plan of Puerto Rico and the USVI. These FMPs were prepared by the Council and are implemented through regulations at 50 CFR part 622 under the authority of the Magnuson-Stevens Fishery Conservation and Management Act (Magnuson-Stevens Act).

Background

The 2006 reauthorization of the Magnuson-Stevens Act requires that, in 2010, FMPs for the fisheries determined by the Secretary of Commerce to be subject to overfishing establish a mechanism of specifying ACLs at a level that prevents overfishing and helps achieve OY within a fishery. Additionally, FMPs must specify accountability measures to ensure ACLs are not exceeded or mitigate if they are exceeded.

NMFS' 2011 Report on the Status of U.S. Fisheries classifies Caribbean queen conch, Grouper Units 1 and 4, Snapper Unit 1, and parrotfishes as undergoing overfishing.

Provisions Contained in This Proposed Rule

Amend the Composition of Stock Complexes

The snapper and grouper complexes included within the Reef Fish FMP for the U.S. Caribbean are currently composed of four grouper units and four snapper units. Unit composition presently excludes several species of commonly harvested fish and also fails to aggregate species in an ecologically consistent manner.

The black grouper (*Mycteroperca bonaci*) is not included in any of the units although this species is frequently caught by recreational anglers. This rule would add black grouper to Grouper Unit 4 along with other members of that unit with common habitat and depth preferences. Both misty (*Epinephelus mystacinus*) and yellowedge (*E. flavolimbatus*) grouper are presently included in Grouper Unit 4, but these two species are found at water depths much greater than are the other members of Grouper Unit 4. Therefore, the Council and NMFS propose to create a new Grouper Unit 5 that would contain both misty and yellowedge grouper. Finally, the creole-fish (*Paranthias furcifer*) is proposed to be removed from the FMP. An adjusted average of about 15 lb (6.8 kg) of creole-fish was reported to have been landed by the commercial sector between 1983 and 2007, and no recreational landings have been reported between 2000 and

2007. The Council determined that this species was not in need of Federal conservation and management.

The cardinal snapper (*Pristipomoides macropthalmus*) is commonly caught by commercial fishers but is not currently included in any snapper unit. This rule would add cardinal snapper to Snapper Unit 2 because of similarities with the queen snapper (*Etelis oculatus*) in landings records and depth distribution. In contrast, the wenchman (*P. aquilonaris*) presently is included as a member of Snapper Unit 2 but clusters most closely with members of Snapper Unit 1 (silk (*Lutjanus vivanus*), black (*Apsilus dentatus*), blackfin (*L. buccanella*), and vermilion (*Rhomboplites aurorubens*)), based upon depth and habitat preferences, and is therefore proposed to be moved into that unit.

Revise Management Reference Points

The Magnuson-Stevens Act requires that FMPs specify a number of reference points for managed fish stocks, including maximum sustainable yield (MSY), OY, and stock status determination criteria that can be used to determine overfished and overfishing thresholds. These reference points are intended to provide the means to measure the status and performance of fisheries relative to established goals and are used to establish ACLs.

Proxies have been established for these reference points because available data in the U.S. Caribbean are not sufficient to support direct estimation of these parameters. The FMP Amendments would revise three of those proxies. First, it would use average catch as a proxy for MSY for all units or complexes except queen conch and parrotfish. The time period during which average catch is calculated for those species is 1999–2005 for the commercial sectors of Puerto Rico and St. Croix, 2000–2005 for the recreational sector of Puerto Rico, and 2000–2005 for the commercial sector of St. Thomas/St. John. These year sequences represent the longest time series of catch data prior to the Comprehensive Sustainable Fisheries Act Amendment (which included provisions that may have substantially altered catch patterns) that the Council considers to be consistently reliable across all U.S. Caribbean islands. The MSY proxy of queen conch and parrotfish would be set equal to the fishing level recommendation specified by the Council's SSC (*i.e.* the allowable biological catch (ABC)) for those species. Second, the Amendments would define the overfishing threshold of all species as the overfishing limit (OFL), which would equal the MSY proxy. Third, for most units or complexes, OY is proposed to equal the MSY proxy multiplied by a proposed reduction factor of 0.85 to account for uncertainty in the scientific and management process. The OY of queen conch would not be reduced below the MSY proxy. For Nassau grouper, goliath grouper, rainbow parrotfish, blue parrotfish, and midnight parrotfish, the rule would set the OY equal to zero.

Island Specific Management

This rule also would establish island-specific management to enable application of AMs in response to harvesting activities on a single island (Puerto Rico, St. Croix) or island group (St. Thomas/St. John) without necessarily affecting fishing activities on the other islands or island groups. For example, if the ACL for the grouper complex is divided among Puerto Rico, St. Croix and St. Thomas/St. John and the St. Croix fishery exceeds its grouper ACL, then an AM can be applied in the Federal waters surrounding St. Croix without necessarily affecting the harvest of groupers in Federal waters surrounding Puerto Rico or St. Thomas/St. John. This rule would establish geographic boundaries between islands/island groups based upon an equidistant approach that uses a mid-point to divide the exclusive economic zone (EEZ) among islands. The three island management areas include: Puerto Rico, St. Croix, and St. Thomas/St. John.

Establish Annual Catch Limits and Accountability Measures

This rule would establish ACLs and AMs for queen conch and for all snapper, grouper, and parrotfish units or complexes in the Caribbean Reef Fish FMP. Each ACL would be sub-divided among the three islands/island groups. Separate sector ACLs (commercial and recreational) would be established for the Puerto Rico management area where landings data are available for both the commercial and recreational sectors. For the other island management areas (St. Croix and St. Thomas/St. John), only commercial data are available; therefore, ACLs would be established for the St. Croix and St. Thomas/St. John management areas based on commercial landings data only. Commercial data used to monitor those ACLs would be derived from trip ticket reports collected from territorial governments and recreational data used to monitor the Puerto Rico recreational ACLs would be derived from the Marine Recreational Fisheries Statistics Survey or Marine Recreational Information Program (MRIP). U.S. Caribbean landings data generally do not provide useful information at the species level. The only exception to this situation is snapper data in Puerto Rico, where approximately 95 percent of all fish are reported to the species level. In the USVI, all snapper, grouper, and parrotfish landings are reported only to the complex level. Even in Puerto Rico, approximately 99 percent of parrotfish are reported only to the complex level and roughly 65 percent of grouper are reported only to the complex level. Thus, this rule would set unit-specific ACLs only for snapper units in Puerto Rico. For all other species in each island management area, aggregate ACLs would be established at the complex level.

The ACLs proposed for these units or complexes are derived from the OFL (MSY proxy) (or SSC-recommended ABC) and most are reduced by 15 percent to buffer against scientific and management uncertainty, reducing the probability that overfishing will occur. The portion of the parrotfish ACL allocated to St. Croix is reduced by an additional 5.8822 percent to further reduce the impacts of parrotfish harvest on Acropora species in St. Croix waters, where parrotfish harvest is particularly intense. The rule would specify an ACL of zero for Nassau grouper, goliath grouper, rainbow parrotfish, blue parrotfish, and midnight parrotfish. The rule would establish an ACL equal to the ABC recommended by the SSC for queen conch, which is far below average landings.

The AMs for queen conch are described in the 2010 regulatory amendment (final rule published on May 26, 2011, 76 FR 30554) to the FMP for Queen Conch Resources of Puerto Rico and the USVI, and state that when the USVI closes its territorial waters off St. Croix to the harvest and possession of queen conch, NMFS will concurrently close the EEZ in the area of Lang Bank until the start of the next territorial fishing season. For Puerto Rico and St. Thomas/St. John, the applicable ACL would be set at zero and so harvest would be prohibited in the EEZ for those areas.

The AMs proposed in this rule are designed to prevent fishermen from exceeding the snapper, grouper, and parrotfish ACLs. For AMs, two components are considered, the first identifies the conditions under which AMs would be triggered and the second describes the action(s) that would occur if AMs are triggered. This rule triggers AMs if NMFS' SEFSC determines that an ACL has been exceeded based on a moving multi-year average of landings as described in the FMP. Both commercial and recreational landings of

a species, unit, or complex vary substantially from year to year; applying a multi-year average is intended to address that variability. The rule would reduce the length of the fishing season for the affected species, unit or complex the year following any year it is determined that the ACL was exceeded by the amount needed to prevent such an overage from occurring again. The AM is triggered unless NMFS' SEFSC, in consultation with the Council and its SSC, determines the overage occurred because data collection and monitoring improved, rather than because catches actually increased. In such circumstances NMFS and the Council would review the relevant information and take further action as appropriate.

General Management Measures

Parrotfish are considered to perform an important ecological function on U.S. Caribbean coral reefs, grazing algae, which competes for space with a variety of coral species. These species include *Acropora palmata* and *A. cervicornis,* both of which are listed as threatened under the Endangered Species Act. Critical habitat has been designated for these coral species, and the essential feature of the critical habitat is available substrate free of macroalgae at certain depths. Parrotfish are also considered a cultural component of the U.S. Caribbean diet in some areas, especially in St. Croix. This rule would prohibit the harvest of the three largest species of parrotfish that occur on Caribbean coral reefs blue (*Scarus coeruleus*), midnight (*S. coelestinus*), and rainbow (*S. guacamaia*) parrotfish. These species tend to grow slowly and have relatively long timeframes for population replenishment relative to other parrotfish species, making them particularly susceptible to overharvest.

Additionally, this rule would establish an aggregate bag limit for the recreational harvest of snapper, grouper and parrotfish. The daily recreational bag limit for snapper, grouper, and parrotfish combined is proposed to be five fish per person per day, with no more than two parrotfish per person within the aggregate. This rule also would establish a vessel limit on snapper, grouper, and parrotfish of 15 fish per day, including no more than 6 parrotfish per vessel per day.

Framework Measures

This rule would establish framework measures for both the reef fish and queen conch FMPs. Management measures proposed to be adjusted through framework amendments include but are not limited to quotas, closures, trip limits, bag limits, size limits, gear restrictions, fishing years, and reference points. The purpose of these framework measures is to allow the Council to more expeditiously adjust management in response to changing fishery conditions.

Classification

Pursuant to section 304(b)(1)(A) of the Magnuson-Stevens Act, the NMFS Assistant Administrator has determined that this proposed rule is consistent with Amendment 2 to the Queen Conch FMP and Amendment 5 to the Reef Fish FMP, other provisions of the Magnuson-Stevens Act, and other applicable law, subject to further consideration after public comment.

This proposed rule has been determined to be not significant for purposes of Executive Order 12866. However, ACLs are a controversial issue in the U.S. Caribbean, which is a region with populations characterized by large percents of racial/ethnic minorities, high poverty rates, and low median household incomes. Moreover, commercial fishermen of St. Croix and St. Thomas/St. John would experience a substantially greater adverse economic impact relative to their counterparts in Puerto Rico.

NMFS prepared an IRFA, as required by section 603 of the Regulatory Flexibility Act (RFA), for this proposed rule. The IRFA describes the economic impact that this proposed rule, if adopted, would have on small entities. A description of the action, why it is being considered, the objectives of, and legal basis for this action are contained at the beginning of this section in the preamble and in the **SUMMARY** section of the preamble. A copy of the full analysis is available from the Council (see **ADDRESSES**). A summary of the IRFA follows.

The proposed rule, which consists of several actions, would: Prohibit fishing for and possession of three species of parrotfish; establish recreational bag limits for parrotfish, snapper and grouper; specify ACLs and AMs for Caribbean queen conch, parrotfish, snapper and grouper; and establish framework measures to facilitate regulatory modifications. The establishment of ACLs is based on the revised management reference points and status determination criteria for Caribbean queen conch, snapper, grouper, and parrotfish that are contained in the FMP Amendment.

The Magnuson-Stevens Act provides the statutory basis for the proposed rule.

While existing Federal regulations that NMFS enforces presently impose seasonal or year-round prohibitions on fishing for snapper, grouper, parrotfish and queen conch in Federal waters of the U.S. Caribbean, no duplicative, overlapping, or conflicting Federal rules to these proposed rules have been identified. The proposed rule would not alter existing reporting or record-keeping requirements; however, it would prohibit fishing for and possession of blue, midnight and rainbow parrotfish in the EEZ; establish recreational bag limits for parrotfish, snapper and grouper; and provide NMFS the authority to restrict harvest in areas of the EEZ where annual or average annual landings of a stock, complex or unit exceed the ACL. The AMs may constitute a new compliance requirement and are analyzed later in the IRFA.

A business is classified as a small business for the purposes of the RFA if it is independently owned and operated, is not dominant in its field of operation (including its affiliates), and has combined annual receipts or number of employees not in excess of the Small Business Administration's (SBA's) size standards. This proposed rule is expected to directly affect businesses that harvest parrotfish, snapper, grouper and queen conch from Federal waters off Puerto Rico and the USVI. These businesses are in the Finfish Fishing (NAICS 114111), Shellfish Fishing (NAICS 114112) and Charter Fishing Industries (NAICS 487210). The Finfish and Shellfish Fishing Industries have an SBA size standard of $4.0 million in annual receipts, and the Charter Fishing Industry's size standard is $7.0 million in annual receipts. The IRFA assumes all commercial (finfish and shellfish) and charter fishing businesses that operate in the U.S. Caribbean have annual receipts less than these size standards, and therefore are small businesses.

In 2008, there were 868 active commercial fishermen in Puerto Rico; 74 percent of these fishermen were captains and the remaining 26 percent were crew members. The IRFA assumes each captain represents a small business in the Finfish Fishing Industry and each member of the crew an employee of one of those businesses. Therefore, it is concluded that there are 638 small businesses in the Finfish Fishing Industry in Puerto Rico, and potentially all of these businesses could be directly affected by the proposed rule. In 2008, there were 223 licensed commercial fishermen in St. Croix and 160 in St. Thomas/St. John. There is a moratorium on the number of USVI commercial fishing licenses, so the IRFA assumes the 223 commercial fishermen in St. Croix and 160 commercial fishermen in St. Thomas/St. John represent 383 small

businesses in the Finfish Fishing Industry in the USVI that could be directly affected by the proposed rule.

Current regulations prohibit fishing for or transportation of queen conch in the EEZ off Puerto Rico and St. Thomas/St. John, and the proposed rule would not end that prohibition. Hence, the proposed rule would not apply to small businesses in the Shellfish Fishing Industry in Puerto Rico and St. Thomas/St. John. Thirty-nine percent of St. Croix's licensed commercial fishermen in 2003 reported that they targeted conch. Thus, it is assumed that 39 percent of St. Croix's 223 commercial fishermen represent 87 small businesses in the Shellfish Fishing Industry that harvest queen conch and could be directly affected by the proposed rule.

There are an estimated 9 small businesses in the Charter Fishing Industry in Puerto Rico, 12 such businesses in St. Thomas/St. John and 1 in St. Croix. The proposed rule would apply to all of these small businesses.

The proposed rule would apply to all small businesses in Puerto Rico, St. Croix and St. Thomas/St. John within the Finfish Fishing and Charter Fishing Industries. Moreover, it would apply to all of the small businesses in St. Croix in the Shellfish Fishing Industry. Therefore, the proposed rule applies to a substantial number of small entities in the U.S. Caribbean in these industries.

Charter fishing operations in Puerto Rico and the USVI target pelagic species and tend not to target snapper, grouper, parrotfish or queen conch in Federal waters. Consequently, NMFS expects that small businesses in the Charter Fishing Industry in Puerto Rico, St. Croix or St. Thomas/St. John would experience little to no adverse economic impact because of the proposed rule.

The proposed St. Croix Queen Conch ACL is consistent with the USVI Department of Planning and Natural Resources' (DPNR's) annual quota of 50,000 lb (22,680 kg) of queen conch in St. Croix. Once the DPNR has determined that the quota is met, the queen conch fishery in both territorial and Federal waters is closed and no landings of queen conch in St. Croix are permitted for the remainder of the fishing season. The matching of the proposed St. Croix Queen Conch ACL with the already established annual quota in St. Croix should result in no adverse economic impact on small businesses of St. Croix in the Shellfish Fishing Industry.

The proposed ban on fishing for and possession of blue, midnight and rainbow parrotfish in the EEZ is not expected to have an adverse economic impact on small businesses in the Finfish Fishing Industry in Puerto Rico because these species are harvested in territorial, not Federal, waters. Commercial landings of these species in the USVI are unknown, and, consequently, any adverse economic impacts of the prohibition on commercial fishing operations are unknown. One way for these small businesses in St. Croix and St. Thomas/St. John to mitigate loss of landings and associated revenues of these species of parrotfish would be to increase landings of other parrotfish or non-parrotfish species taken in the EEZ; however, the ability to increase landings of other parrotfish or snapper and grouper would be limited or could be eliminated by the proposed ACLs and AMs. USVI small businesses could also mitigate adverse impacts by increasing harvest in territorial waters. However, the ability of small businesses in Puerto Rico and the USVI to mitigate losses by increasing effort in territorial waters would be eliminated if Puerto Rico and the USVI were to implement compatible regulations.

A comparison of the proposed Puerto Rico commercial ACLs for Snapper Units 1 through 4, Grouper, and Parrotfish to average annual commercial landings from 2006 to 2007 suggests the proposed commercial ACLs for Snapper Units 1, 3 and 4, Grouper, and Parrotfish would not require reductions in the lengths of the Federal commercial fishing seasons for these complexes and units in the Puerto Rico EEZ. Therefore, there would be no adverse economic impact on small businesses in Puerto Rico that harvest these species.

The proposed Puerto Rico commercial Snapper Unit 2 ACL is less than the expected average annual landings of Snapper Unit 2 from 2010 and thereafter, which suggests there would be an overage of Snapper Unit 2 landings beginning in 2010 that would require a shortened Federal fishing season in the Puerto Rico EEZ in a subsequent year by 1.2 days. Puerto Rico's commercial fishermen could mitigate the shortened Snapper Unit 2 fishing season in the Puerto Rico EEZ by targeting other snapper and non-snapper species during the time that the Federal Snapper Unit 2 fishing season is closed, or they could move into territorial waters to harvest Snapper Unit 2 species during the time the Federal season is closed. Approximately 95 percent of fishable area off Puerto Rico is in territorial waters. If a shortened Federal fishing season is no more than 10 percent effective in reducing the overage as a result of shifting effort into territorial waters, the total loss of ex-vessel revenue from Snapper Unit 2 landings would be no more than approximately $104,812 over a 10-year period. The average 10-year loss per small business in the Finfish Fishing Industry in Puerto Rico would be approximately $163.

This proposed rule is expected to have a greater adverse economic impact on small businesses in the Finfish Fishing Industry in St. Croix and St. Thomas/St. John. St. Croix small businesses would incur from 73 to 76 percent of the total cost, and St. Thomas/St. John small businesses would incur from 23 to 26 percent of the total cost, while Puerto Rico's small businesses would incur approximately 1 percent of the total cost.

The percent of fishable area in the USVI's territorial waters is significantly less than the percent of fishable area in Puerto Rico's territorial waters. Thirty-eight percent of fishable area off the USVI lies within the U.S. Caribbean EEZ, and a larger share of landings in St. Croix and St. Thomas/St. John derive from fishing in the EEZ than in Puerto Rico. Hence, it is more difficult for USVI fishermen to substitute fishing in territorial waters for fishing in Federal waters.

The estimates of the adverse economic impacts of the proposed rule on small businesses in the Finfish Industry in St. Croix and St. Thomas/St. John include uncertainty regarding the ability of the proposed AMs to reduce the overage of landings depending on whether, and to what extent, fishing effort shifts into territorial waters. Three scenarios are assumed to incorporate that uncertainty. The first assumes the proposed AMs reduce the overage of landings by 30 percent, the second, by 50 percent, and the third, by 80 percent. The total adverse economic impact on St. Croix's 223 small businesses would be losses of ex-vessel revenue ranging from approximately $5.12 million to $7.68 million over the 10-year period from 2011 to 2020, and the adverse economic impact on St. Thomas/St. John's 160 small businesses would be losses of ex-vessel revenue ranging from approximately $1.81 million to $2.30 million over the same period. The average total cost per small business in St. Croix would range from $22,959 to $34,437, and the average total cost per small business in St. Thomas/St. John would range from $11,304 to $14,359 over that period.

Among the considered but rejected significant alternatives for Action 5A, which addresses the triggering of AMs, were Alternatives 2A and 3A, which would use a single year's landings to trigger the AMs. Also considered but rejected were Alternatives 2B and 3B

that would use a single year's landings in 2010 and then use a 2-year annual average starting in 2011 and continue it thereafter to trigger the AMs. Preferred Alternative 3C and Alternative 2C would use a 3-year average starting in 2012 and continue it thereafter. The adverse economic impact of Preferred Alternative 3C is less than the adverse economic impacts of rejected Alternatives 2B, 3B, 2A and 3A because it would likely result in fewer shortened fishing seasons as a result of triggering AMs.

Alternative 3 of Action 5b, which addresses the application of AMs, was considered but rejected because it would require a larger reduction in the Federal fishing season than Preferred Alternative 2, which would increase the adverse economic impact.

Considered but rejected significant alternatives would have established reduced ACLs with respect to the selected ACL alternative. Preferred Alternative 2d would have a smaller adverse economic impact than considered but rejected Alternatives 2e and 2f because the latter would set smaller ACLs. Rejected Alternative 2c would have a smaller adverse economic impact than Preferred Alternative 2d; however, Alternative 2c does not allow for uncertainty and could yield lower long-run benefits to small businesses.

List of Subjects in 50 CFR Part 622

Fisheries, Fishing, Puerto Rico, Reporting and recordkeeping requirements, Virgin Islands.

Dated: October 19, 2011.

Samuel D. Rauch III,

Deputy Assistant Administrator for Regulatory Programs, National Marine Fisheries Service.

For the reasons set out in the preamble, 50 CFR part 622 is proposed to be amended as follows:

PART 622—FISHERIES OF THE CARIBBEAN, GULF, AND SOUTH ATLANTIC

1. The authority citation for part 622 continues to read as follows:

Authority: 16 U.S.C. 1801 *et seq.*

2. In § 622.32, paragraph (b)(1)(v) is added to read as follows:

§ 622.32 Prohibited and limited-harvest species.

* * * * *

(b) * * *

(1) * * *

(v) No person may fish for or possess midnight parrotfish, blue parrotfish, or rainbow parrotfish in or from the Caribbean EEZ. Such fish caught in the Caribbean EEZ must be released with a minimum of harm.

* * * * *

3. In § 622.33, paragraph (d)(1) is revised to read as follows:

§ 622.33 Caribbean EEZ seasonal and/or area closures.

* * * * *

(d) * * *

(1) Pursuant to the procedures and criteria established in the FMP for Queen Conch Resources in Puerto Rico and the U.S. Virgin Islands, when the ACL, as specified in § 622.49(c)(2)(i)(A), is reached or projected to be reached, the Regional Administrator will close the Caribbean EEZ to the harvest and possession of queen conch, in the area east of 64°34′ W. longitude which includes Lang Bank, east of St. Croix, U.S. Virgin Islands, by filing a notification of closure with the Office of the Federal Register.

* * * * *

4. In § 622.39, paragraph (g) is added to read as follows:

§ 622.39 Bag and possession limits.

* * * * *

(g) *Caribbean reef fish*—(1) *Applicability.* Paragraph (a)(1) of this section notwithstanding, the bag limits of paragraph (g)(2) of this section do not apply to a person who has a valid commercial fishing license issued by Puerto Rico or the U.S. Virgin Islands.

(2) *Bag limits.* Groupers, snappers, and parrotfishes combined—5 per person per day or, if 3 or more persons are aboard, 15 per vessel per day; but not to exceed 2 parrotfish per person per day or 6 parrotfish per vessel per day.

5. In § 622.48, paragraph (b) is revised and paragraph (m) is added to read as follows:

§ 622.48 Adjustment of management measures.

* * * * *

(b) *Caribbean reef fish.* Fishery management units (FMUs), quotas, trip limits, bag limits, size limits, closed seasons or areas, gear restrictions, fishing years, MSY, OY, TAC, maximum fishing mortality threshold (MFMT), minimum stock size threshold (MSST), overfishing limit (OFL), acceptable biological catch (ABC) control rules, ACLs, AMs, ACTs, and actions to minimize the interaction of fishing gear with endangered species or marine mammals.

* * * * *

(m) *Caribbean queen conch.* Quotas, trip limits, bag limits, size limits, closed seasons or areas, gear restrictions, fishing year, MSY, OY, TAC, MFMT, MSST, OFL, ABC control rules, ACLs, AMs, ACTs, and actions to minimize the interaction of fishing gear with endangered species or marine mammals.

6. In § 622.49, the section heading is revised and paragraph (c) is added to read as follows:

§ 622.49 Annual catch limits (ACLs) and accountability measures (AMs).

* * * * *

(c) *Caribbean island management areas.* If landings from a Caribbean island management area, as specified in Appendix E to part 622, except for landings of queen conch (see § 622.33(d)), are estimated by the SRD to have exceeded the applicable ACL, as specified in paragraph (c)(1) of this section for Puerto Rico management area species or species groups, paragraph (c)(2) of this section for St. Croix management area species or species groups, or paragraph (c)(3) for St. Thomas/St. John management area species or species groups, the AA will file a notification with the Office of the Federal Register, at or near the beginning of the following fishing year, to reduce the length of the fishing season for the applicable species or species groups that year by the amount necessary to ensure landings do not exceed the applicable ACL. If NMFS determines the ACL for a particular species or species group was exceeded because of enhanced data collection and monitoring efforts instead of an increase in total catch of the species or species group, NMFS will not reduce the length of the fishing season for the applicable species or species group the following fishing year. Landings will be evaluated relative to the applicable ACL based on a moving multi-year average of landings, as described in the FMP. With the exceptions of Caribbean queen conch in Puerto Rico and St. Thomas/St. John management areas, goliath grouper, Nassau grouper, midnight parrotfish, blue parrotfish, and rainbow parrotfish, ACLs are based on the combined Caribbean EEZ and territorial landings for each management area. The ACLs specified in paragraphs (c)(1), (c)(2), and (c)(3) of this section are given in round weight. (See § 622.32 for limitations on taking prohibited and limited harvest species. The limitations in § 622.32 apply without regard to whether the species is harvested by a vessel operating under a valid commercial fishing license issued by Puerto Rico or the U.S. Virgin Islands or by a person subject to the bag limits.)

(1) *Puerto Rico*—(i) *Commercial ACLs.* The following ACLs apply to commercial landings of Puerto Rico management area species or species groups.

(A) *Queen conch*—0 lb (0 kg), for the EEZ only.

(B) *Parrotfishes*—52,737 lb (23,915 kg).

(C) *Snapper Unit 1*—284,685 lb (129,131 kg).

(D) *Snapper Unit 2*—145,916 lb (66,186 kg).

(E) *Snapper Unit 3*—345,775 lb (156,841 kg).

(F) *Snapper Unit 4*—373,295 lb (169,324 kg).

(G) *Groupers*—177,513 lb (80,519 kg).

(ii) *Recreational ACLs.* The following ACLs apply to recreational landings of Puerto Rico management area species or species groups.

(A) *Queen conch*—0 lb (0 kg), for the EEZ only.

(B) *Parrotfishes*—15,263 lb (6,921 kg).

(C) *Snapper Unit 1*—95,526 lb (43,330 kg).

(D) *Snapper Unit 2*—34,810 lb (15,790 kg).

(E) *Snapper Unit 3*—83,158 lb (37,720 kg).

(F) *Snapper Unit 4*—28,509 lb (12,931 kg).

(G) *Groupers*—77,213 lb (35,023 kg).

(2) *St. Croix*—(i) *ACLs.* The following ACLs apply to landings of St. Croix management area species or species groups.

(A) *Queen conch*—50,000 lb (22,680 kg).

(B) *Parrotfishes*—240,000 lb (108,863 kg).

(C) *Snappers*—102,946 lb (46,696 kg).

(D) *Groupers*—30,435 lb (13,805 kg).

(ii) [Reserved]

(3) *St. Thomas/St. John*—(i) *ACLs.* The following ACLs apply to landings of St. Thomas/St. John management area species or species groups.

(A) *Queen conch*—0 lb (0 kg), for the EEZ only.

(B) *Parrotfishes*—42,500 lb (19,278 kg).

(C) *Snappers*—133,775 lb (60,679 kg).

(D) *Groupers*—51,849 lb (23,518 kg).

(ii) [Reserved]

7. In table 2 of Appendix A,

a. Under *Lutjanidae—Snappers,* units 1 and 2 are revised;

b. Under *Serranidae—Sea basses and Groupers,* units 3 and 4 are revised; and

c. Under *Serranidae—Sea basses and Groupers,* unit 5 is added.

The revisions and additions read as follows:

Appendix A to Part 622—Species Tables

* * * * *

Table 2 of Appendix A to Part 622—Caribbean Reef Fish

Lutjanidae—Snappers

Unit 1

Black snapper, *Apsilus dentatus*
Blackfin snapper, *Lutjanus buccanella*
Silk snapper, *Lutjanus vivanus*
Vermilion snapper, *Rhomboplites aurorubens*
Wenchman, *Pristipomoides aquilonaris*

Unit 2

Cardinal, *Pristipomoides macrophthalmus*
Queen snapper, *Etelis oculatus*

* * * * *

Serranidae—Sea basses and Groupers

* * * * *

Unit 3

Coney, *Epinephelus fulvus*
Graysby, *Epinephelus cruentatus*
Red hind, *Epinephelus guttatus*
Rock hind, *Epinephelus adscensionis*

Unit 4

Black grouper, *Mycteroperca bonaci*
Red grouper, *Epinephelus morio*
Tiger grouper, *Mycteroperca tigris*
Yellowfin grouper, *Mycteroperca venenosa*

Unit 5

Misty grouper, *Epinephelus mystacinus*
Yellowedge grouper, *Epinephelus flavolimbatus*

* * * * *

8. Appendix E to part 622 is added to read as follows:

Appendix E to Part 622—Caribbean Island/Island Group Management Areas

Table 1 of Appendix E to Part 622— *Coordinates of the Puerto Rico Management Area.*

The Puerto Rico management area is bounded by rhumb lines connecting, in order, the following points.

Point	North lat.	West long.
A (intersects with the International/EEZ boundary)	19°37′29″	65°20′57″
B (intersects with the EEZ/Territorial boundary)	18°25′46.3015″	65°06′31.866″
From Point B, proceed southerly along the EEZ/Territorial boundary to Point C		
C (intersects with the EEZ/Territorial boundary)	18°13′59.0606″	65°05′33.058″
D	18°01′16.9636″	64°57′38.817″
E	17°30′00.000″	65°20′00.1716″
F	16°02′53.5812″	65°20′00.1716″
From Point F, proceed southwesterly, then northerly, then easterly, and finally southerly along the International/EEZ boundary to Point A		
A (intersects with the International/EEZ boundary)	19°37′29″	65°20′57″

Table 2 of Appendix E to Part 622— *Coordinates of the St. Croix Management Area.*

The St. Croix management area is bounded by rhumb lines connecting, in order, the following points.

Point	North lat.	West long.
G	18°03′03″	64°38′03″
From Point G, proceed easterly, then southerly, then southwesterly along the EEZ/Territorial boundary to Point F.		
F	16°02′53.5812″	65°20′00.1716″
E	17°30′00.000″	65°20′00.1716″
D	18°01′16.9636″	64°57′38.817″
G	18°03′03″	64°38′03″

Table 3 of Appendix E to Part 622— *Coordinates of the St. Thomas/St. John Management Area.*

The St. Thomas/St. John management area is bounded by rhumb lines connecting, in order, the following points.

Point	North lat.	West long.
A (intersects with the International/EEZ boundary)	19°37′29″	65°20′57″
From Point A, proceed southeasterly along the EEZ/Territorial boundary to Point G		
G	18°03′03″	64°38′03″
D	18°01′16.9636″	64°57′38.817″
C (intersects with the EEZ/Territorial boundary)	18°13′59.0606″	65°05′33.058″
From Point C, proceed northerly along the EEZ/Territorial boundary to Point B		
B (intersects with the EEZ/Territorial boundary)	18°25′46.3015″	65°06′31.866″
A (intersects with the International/EEZ boundary)	19°37′29″	65°20′57″

[FR Doc. 2011–27741 Filed 10–26–11; 8:45 am]

BILLING CODE 3510–22–P

Notices

Federal Register

Vol. 76, No. 208

Thursday, October 27, 2011

This section of the FEDERAL REGISTER contains documents other than rules or proposed rules that are applicable to the public. Notices of hearings and investigations, committee meetings, agency decisions and rulings, delegations of authority, filing of petitions and applications and agency statements of organization and functions are examples of documents appearing in this section.

DEPARTMENT OF AGRICULTURE

Submission for OMB Review; Comment Request

October 21, 2011.

The Department of Agriculture has submitted the following information collection requirement(s) to OMB for review and clearance under the Paperwork Reduction Act of 1995, Public Law 104–13. Comments regarding (a) whether the collection of information is necessary for the proper performance of the functions of the agency, including whether the information will have practical utility; (b) the accuracy of the agency's estimate of burden including the validity of the methodology and assumptions used; (c) ways to enhance the quality, utility and clarity of the information to be collected; (d) ways to minimize the burden of the collection of information on those who are to respond, including through the use of appropriate automated, electronic, mechanical, or other technological collection techniques and other forms of information technology should be addressed to: Desk Officer for Agriculture, Office of Information and Regulatory Affairs, Office of Management and Budget (OMB), Washington, DC, *OIRA_Submission@OMB.EOP.GOV* or fax (202) 395–5806 and to Departmental Clearance Office, USDA, OCIO, Mail Stop 7602, Washington, DC 20250–7602. Comments regarding these information collections are best assured of having their full effect if received within 30 days of this notification. Copies of the submission(s) may be obtained by calling (202) 720–8681.

An agency may not conduct or sponsor a collection of information unless the collection of information displays a currently valid OMB control number and the agency informs potential persons who are to respond to the collection of information that such persons are not required to respond to the collection of information unless it displays a currently valid OMB control number.

Forest Service

Title: Airplane Pilot Qualifications and Approval Record, Helicopter Pilot Qualifications and Approval Record, Airplane Data Record, and Helicopter Data Record.

OMB Control Number: 0596–0015.

Summary of Collection: The Forest Service (FS) is the largest owner and operator of aircraft in the federal government outside of the Department of Defense. In conducting the Forest Service Land management mission they use 44 owned aircraft with 315 aircraft on loan to 18 States for fire suppression activities. The majority of FS flying is in support of wildland fire suppression. In addition to the agency owned aircraft, the FS contracts with approximately 400 vendors for aviation services used in resource protection and administrative projects. Contractor aircraft and pilots are used to place water and chemical retardants on fires, provide aerial delivery of firefighters to fires, perform reconnaissance, resource surveys, search for lost personnel, and fire detection. Contracts for such services established rigorous qualification requirements for pilots and specific condition/equipment/performance requirements for aircraft. The authority is granted under the Federal Aviation Administration Regulations in Title 14 (Aeronautics and Space) of the Code of Federal Regulations.

Need and Use of the Information: FS will collect information using FS forms to document the basis for approval of contract pilot and aircraft for use in specific FS aviation missions. The information collected from contract pilots in face to face meetings (such as name, age, pilots license number, number of hours flown in type of aircraft, etc.) is based on the length and type of contract but is usually done on an reoccurring annual basis. Without the information supplied on these forms, FS contracting officers and pilot/aircraft inspectors cannot determine if pilots and aircraft meet the detailed qualification, equipment, and condition requirements essential to safe, efficient accomplishment of FS specified flying missions and which are included in contract specifications.

Description of Respondents: Individuals or households; business or other for-profit; State, Local or Tribal Government.

Number of Respondents: 2,700.

Frequency of Responses: Reporting: Annually.

Total Burden Hours: 1,226.

Charlene Parker,

Departmental Information Collection Clearance Officer.

[FR Doc. 2011–27766 Filed 10–26–11; 8:45 am]

BILLING CODE 3410–11–P

DEPARTMENT OF AGRICULTURE

Agricultural Marketing Service

[Doc. No.: AMS–DA–11–0087; DA–11–05]

RIN 0581–0110

Request for an Extension to a Currently Approved Information Collection for the Regulations Governing the Inspection and Grading of Manufactured or Processed Dairy Products—Recordkeeping (Subpart B)

AGENCY: Agricultural Marketing Service, USDA.

ACTION: Request for comments.

SUMMARY: In accordance with the Paperwork Reduction Act of 1995 (44 U.S.C. Chapter 35), this document announces the Agricultural Marketing Service's (AMS) intention to request approval from the Office of Management and Budget, for an extension of a revision to the currently approved information collection for the Regulations Governing the Inspection and Grading of Manufactured or Processed Dairy Products—Recordkeeping (Subpart B).

DATES: Comments on this document must be received by December 27, 2011.

ADDRESSES: Interested persons are invited to submit comments concerning this information collection document. Comments should be submitted online at *http://www.regulations.gov* or sent to Evan J. Stachowicz, Dairy Standardization Branch, Dairy Programs, Agricultural Marketing Service, U.S. Department of Agriculture, Room 2746–South Building, 1400 Independence Avenue, SW., Washington, DC 20250–0230; *Telephone:* (202) 720–9385, *Fax:* (202) 720–2643. All comments should

reference the document number (AMS–DA–11–0087; DA–11–08), the date and page number of this issue of the **Federal Register**. All comments received will be posted without change, including any personal information provided, online at *http://www.regulations.gov* and will be made available for public inspections at the above physical address during normal business hours.

FOR FURTHER INFORMATION CONTACT: Evan J. Stachowicz, at the above physical address or by telephone (202) 720–9385, by e-mail at *Evan.Stachowicz@ams.usda.gov.*

SUPPLEMENTARY INFORMATION: *Title:* Regulations Governing the Inspection and Grading of Manufactured or Processed Dairy Products—Recordkeeping (Subpart B).

OMB Number: 0581–0110.

Expiration Date of Approval: March 31, 2012

Type of Request: Extension of a currently approved information collection.

Abstract: The Agricultural Marketing Act (AMA) of 1946 (7 U.S.C. 1621 *et seq.*) directs the Department to develop programs which will provide for and facilitate the marketing of agricultural products. One of these programs is the USDA voluntary inspection and grading program for dairy products (7 CFR Part 58) where these dairy products are graded according to U.S. grade standards by a USDA grader. The dairy products under the dairy program may be identified with the USDA grade mark. Dairy processors, buyers, retailers, institutional users, and consumers have requested that such a program be developed to assure the uniform quality of dairy products purchased. In order for any service program to perform satisfactorily, there are regulations for the provider and user. For these reasons, the dairy inspection and grading program regulations were developed and issued under the authority of the AMA. These regulations are essential to administering the program and meeting the needs of the users.

The information collection requirements in this request are needed to ensure that dairy products are produced under sanitary conditions and buyers are purchasing a quality product. In order for the Regulations governing the Inspection and Grading of Manufactured or Processed Dairy Products to serve the government, industry, and the consumer, laboratory test results must be recorded.

Respondents are not required to submit information to the agency. The records are to be evaluated by a USDA inspector at the time of an inspection. These records include quality tests of each producer, plant records of required tests and analysis, and starter and cheese make records. As an offsetting benefit, the records required by USDA are also records that are routinely used by the inspected facility for their own supervisory and quality control purposes.

Estimate of Burden: Public reporting burden for this collection of information is estimated to average 2.85 hours per response.

Respondents: Dairy products manufacturing facilities.

Estimated Number of Respondents: 487.

Estimated Number of Responses: 1388.

Estimated Number of Responses per Respondent: 2.85.

Estimated Total Annual Burden on Respondents: 3956.

Comments are invited on: (1) Whether the proposed collection of information is necessary for the proper performance of the functions of the agency, including whether the information will have practical utility; (2) the accuracy of the agency's estimate of the burden of the proposed collection of information including the validity of the methodology and assumptions used; (3) ways to enhance the quality, utility, and clarity of the information to be collected; and (4) ways to minimize the burden of the collection of information on those who are to respond, including the use of appropriate automated, electronic, mechanical, or other technological collection techniques or other forms of information technology. Comments may be sent to Evan J. Stachowicz, 1400 Independence Avenue, SW., Room 2746—South, Washington, DC 20250–0230. All comments received will be available for public inspection during regular business hours at the same address.

All responses to this notice will be summarized and included in the request for OMB approval. All comments will become a matter of public record.

Dated: October 21, 2011.

David R. Shipman,

Acting Administrator, Agricultural Marketing Service.

[FR Doc. 2011–27767 Filed 10–26–11; 8:45 am]

BILLING CODE 3410–02–P

DEPARTMENT OF COMMERCE

Submission for OMB Review; Comment Request

The Department of Commerce will submit to the Office of Management and Budget (OMB) for clearance the following proposal for collection of information under the provisions of the Paperwork Reduction Act (44 U.S.C. Chapter 35).

Agency: National Oceanic and Atmospheric Administration (NOAA).

Title: Protocol for Access to Tissue Specimen Samples from the National Marine Mammal Tissue Bank.

OMB Control Number: 0648–0468.

Form Number(s): NA.

Type of Request: Regular submission (revision and extension of a current information collection).

Number of Respondents: 50.

Average Hours per Response: Applications for tissue samples and research reports, 2 hours; submissions of tissue samples, 30 minutes.

Burden Hours: 155.

Needs and Uses: In 1989, the National Marine Mammal Tissue Bank (NMMTB) was established by the National Marine Fisheries Service (NMFS) Office of Protected Resources in collaboration with the National Institute of Standards and Technology (NIST), Minerals Management Service (MMS), and the US Geological Survey/Biological Resources Division (USGS/BRD). The NMMTB provides protocols, techniques, and physical facilities for the long-term storage of tissues from marine mammals. Scientists can request tissues from this repository for retrospective analyses to determine environmental trends of contaminants and other substances of interest. The NMMTB collects, processes, and stores tissues from specific indicator species (e.g., Atlantic bottlenose dolphins, Atlantic white sided dolphins, pilot whales, harbor porpoises), animals from mass strandings, animals that have been obtained incidental to commercial fisheries, animals taken for subsistence purposes, biopsies, and animals from unusual mortality events through two projects, the Marine Mammal Health and Stranding Response Program (MMHSRP) and the Alaska Marine Mammal Tissue Archival Project (AMMTAP).

The purposes of this collection of information are: (1) To enable NOAA to allow the scientific community the opportunity to request tissue specimen samples from the NMMTB and, (2) to enable the Marine Mammal Health and Stranding Response Program (MMHSRP) of NOAA to assemble information on all specimens submitted to the Marine Environmental Specimen Bank (Marine ESB), which includes the NMMTB.

A program change to this collection consists of a new web-based form for application for tissue samples;

previously, there was only a protocol for application.

Affected Public: Not-for-profit institutions.

Frequency: On occasion.

Respondent's Obligation: Voluntary.

OMB Desk Officer: *OIRA_Submission@omb.eop.gov.*

Copies of the above information collection proposal can be obtained by calling or writing Diana Hynek, Departmental Paperwork Clearance Officer, (202) 482–0266, Department of Commerce, Room 6616, 14th and Constitution Avenue, NW., Washington, DC 20230 (or via the Internet at *dHynek@doc.gov*).

Written comments and recommendations for the proposed information collection should be sent within 30 days of publication of this notice to *OIRA_Submission@omb.eop.gov.*

Dated: October 21, 2011.

Gwellnar Banks,

Management Analyst, Office of the Chief Information Officer.

[FR Doc. 2011–27763 Filed 10–26–11; 8:45 am]

BILLING CODE 3510–22–P

DEPARTMENT OF COMMERCE

Submission for OMB Review; Comment Request

The Department of Commerce will submit to the Office of Management and Budget (OMB) for clearance the following proposal for collection of information under the provisions of the Paperwork Reduction Act (44 U.S.C. Chapter 35).

Agency: National Institute of Standards and Technology (NIST).

Title: Manufacturing Extension Partnership (MEP) Client Impact Survey.

OMB Control Number: 0693–0021.

Form Number(s): None.

Type of Request: Regular submission.

Burden Hours: 2,500.

Number of Respondents: 10,000.

Average Hours per Response: 15 Minutes.

Needs and Uses: The objective of the NIST Manufacturing Extension Partnership Program (MEP) is to enhance productivity, technological performance, and strengthen the global competitiveness of small- and medium-sized U.S.-based manufacturing firms. Through this client impact survey, the MEP will collect data necessary for program accountability; analysis and research into the effectiveness of the MEP program; reports to stakeholders; Government Performance and Results Act requirements; continuous improvement efforts; knowledge sharing across the MEP system; and identification of best practices. Collection of this data is needed in order to comply with the MEP charter, as mandated by Congress.

The survey will be revised to reflect NIST's ''Next Generation Strategy.'' This new strategy focuses on growth and innovation for manufacturers. The information will inform management and stakeholders of the strategy's effectiveness.

Affected Public: Business or other for-profit organizations.

Frequency: Annually.

Respondent's Obligation: Required to obtain benefits.

OMB Desk Officer: Jasmeet Seehra, (202) 395–3123.

Copies of the above information collection proposal can be obtained by calling or writing Diana Hynek, Departmental Paperwork Clearance Officer, (202) 482–0266, Department of Commerce, Room 6616, 14th and Constitution Avenue, NW., Washington, DC 20230 (or via the Internet at *dHynek@doc.gov*).

Written comments and recommendations for the proposed information collection should be sent within 30 days of publication of this notice to, Jasmeet Seehra, OMB Desk Officer, FAX Number (202) 395–5167, or *Jasmeet_K._Seehra@omb.eop.gov.*

Dated: October 21, 2011.

Gwellnar Banks,

Management Analyst, Office of the Chief Information Officer.

[FR Doc. 2011–27764 Filed 10–26–11; 8:45 am]

BILLING CODE 3510–13–P

DEPARTMENT OF COMMERCE

Foreign-Trade Zones Board

[Docket 67–2011]

Foreign-Trade Zone 29—Louisville, KY, Application for Subzone; North American Stainless (Stainless Steel); Ghent, KY

An application has been submitted to the Foreign-Trade Zones Board (the Board) by the Louisville & Jefferson County Riverport Authority, grantee of FTZ 29, requesting special-purpose subzone status for the stainless steel mill of North American Stainless (NAS), located in Ghent, Kentucky. The application was submitted pursuant to the provisions of the Foreign-Trade Zones Act, as amended (19 U.S.C. 81a–81u), and the regulations of the Board (15 CFR part 400). It was formally filed on October 21, 2011.

The NAS facility (1,800 employees, 1,327 acres, 1.4 million metric ton melting capacity) is located at 6870 U.S. Highway 42 East, Ghent, Kentucky. The facility is used for the manufacturing of flat and long stainless steel products. Components and materials sourced from abroad (representing up to 30% of the value of the finished product) include: fluorospar, molybdenum oxide, ferromanganese, ferrosilicon, ferrosilicon manganese, charge chrome, ferrochrome, ferrochrome silicon, ferronickel, ferromolybdenum, ferroniobium, ferroboron, stainless steel scrap, semifinished iron or non-alloy steel products, semifinished stainless steel products, copper spent anodes, nickel, unwrought nickel alloys, aluminum, zinc, zinc alloys, manganese metal, titanium waste and scrap, unwrought molybdenum and unwrought titanium (duty rate ranges from duty-free to 15%). NAS has indicated that they will accept a restriction requiring all foreign status ferrosilicon, molybdenum and titanium (HTSUS 7202.21, 8102.94, 8108.20 and 8108.90) to be admitted to the proposed subzone in privileged foreign (PF) status (19 CFR 146.41).

FTZ procedures could exempt NAS from customs duty payments on the foreign components used in export production. The company anticipates that some 20–30 percent of the plant's shipments will be exported. On its domestic sales, NAS would be able to choose the duty rates during customs entry procedures that apply to finished and semifinished stainless steel products (duty-free) for the foreign inputs noted above. FTZ designation would further allow NAS to realize logistical benefits through the use of weekly customs entry procedures. Customs duties also could possibly be deferred or reduced on foreign status production equipment. The request indicates that the savings from FTZ procedures would help improve the plant's international competitiveness.

In accordance with the Board's regulations, Elizabeth Whiteman of the FTZ Staff is designated examiner to evaluate and analyze the facts and information presented in the application and case record and to report findings and recommendations to the Board.

Public comment is invited from interested parties. Submissions (original and 3 copies) shall be addressed to the Board's Executive Secretary at the address below. The closing period for their receipt is December 27, 2011. Rebuttal comments in response to material submitted during the foregoing period may be submitted during the

subsequent 15-day period to January 10, 2012.

A copy of the application will be available for public inspection at the Office of the Executive Secretary, Foreign-Trade Zones Board, Room 2111, U.S. Department of Commerce, 1401 Constitution Avenue NW., Washington, DC 20230–0002, and in the ''Reading Room'' section of the Board's Web site, which is accessible via *http://www.trade.gov/ftz.*

For further information, contact Elizabeth Whiteman at *Elizabeth.Whiteman@trade.gov* or (202) 482–0473.

Dated: October 21, 2011.

Andrew McGilvray,

Executive Secretary.

[FR Doc. 2011–27856 Filed 10–26–11; 8:45 am]

BILLING CODE P

DEPARTMENT OF COMMERCE

Foreign-Trade Zones Board

[Docket 66–2011]

Foreign-Trade Zone 37—Orange County, NY, Application for Subzone, ITT Water Technology, Inc. (Centrifugal and Submersible Pumps), Auburn, NY

An application has been submitted to the Foreign-Trade Zones Board (the Board) by the County of Orange, New York, grantee of FTZ 37, requesting special purpose subzone status for the centrifugal and submersible pump manufacturing and warehousing facilities of ITT Water Technology, Inc. (ITTWT), located in Auburn, New York. The application was submitted pursuant to the provisions of the Foreign-Trade Zones Act, as amended (19 U.S.C. 81a–81u), and the regulations of the Board (15 CFR part 400). It was formally filed on October 21, 2011.

The ITTWT facilities (224 employees) consist of two sites: Site 1—manufacturing plant (24.5 acres) located at One Goulds Drive, Auburn, New York; and, Site 2—warehouse (2.5 acres) located at 38 York Street, Auburn. The facilities are used to manufacture and distribute centrifugal and submersible pumps and related controllers (up to one million units of each per year) used in commercial, residential, and waste water applications. Components and materials sourced from abroad (representing 39% of the value of the finished pumps) include: electric motors, pump parts, mechanical seals, plastic o-rings, rubber o-rings, shafts, flanges, motor and shaft couplings, and fasteners (duty rates range from free to 8.5 percent).

FTZ procedures could exempt ITTWT from customs duty payments on the foreign components used in export production. The company anticipates that some 10 percent of the facilities' shipments will be exported. On its domestic sales, ITTWT would be able to choose the duty rates during customs entry procedures that apply to finished centrifugal and submersible pumps (duty free) and controllers (1.5%) for the foreign inputs noted above. FTZ designation would further allow ITTWT to realize logistical benefits through the use of weekly customs entry procedures. Customs duties also could possibly be deferred or reduced on foreign status production equipment. The request indicates that the savings from FTZ procedures would help improve the facilities' international competitiveness.

In accordance with the Board's regulations, Pierre Duy of the FTZ Staff is designated examiner to evaluate and analyze the facts and information presented in the application and case record and to report findings and recommendations to the Board.

Public comment is invited from interested parties. Submissions (original and 3 copies) shall be addressed to the Board's Executive Secretary at the address below. The closing period for their receipt is December 27, 2011. Rebuttal comments in response to material submitted during the foregoing period may be submitted during the subsequent 15-day period to January 10, 2012.

A copy of the application will be available for public inspection at the Office of the Executive Secretary, Foreign-Trade Zones Board, Room 2111, U.S. Department of Commerce, 1401 Constitution Avenue NW., Washington, DC 20230–0002, and in the ''Reading Room'' section of the Board's Web site, which is accessible via *http://www.trade.gov/ftz.*

For further information, contact Pierre Duy at *Pierre.Duy@trade.gov* or (202) 482–1378.

Andrew McGilvray,

Executive Secretary.

[FR Doc. 2011–27854 Filed 10–26–11; 8:45 am]

BILLING CODE P

DEPARTMENT OF COMMERCE

Bureau of Industry and Security

President's Export Council Subcommittee on Export Administration; Notice of Open Meeting

The President's Export Council Subcommittee on Export Administration (PECSEA) will meet on November 14, 2011, 10 a.m., at the U.S. Department of Commerce, Herbert C. Hoover Building, Room 3884, 14th Street between Pennsylvania and Constitution Avenues, NW., Washington, DC. The PECSEA provides advice on matters pertinent to those portions of the Export Administration Act, as amended, that deal with United States policies of encouraging trade with all countries with which the United States has diplomatic or trading relations and of controlling trade for national security and foreign policy reasons.

Agenda:

1. Opening remarks by the Chairman and Vice Chairman.
2. Opening remarks by the Bureau of Industry and Security.
3. Presentation of papers or comments by the public.
4. Review of Deliverables for the PEC.
5. Discussion of 2012 Workplan.
6. Subcommittee Breakout Sessions.

The open session will be accessible via teleconference to 20 participants on a first come, first serve basis. To join the conference, submit inquiries to Ms. Yvette Springer at *Yvette.Springer@bis.doc.gov,* no later than, November 7, 2011.

A limited number of seats will be available for the public session. Reservations are not accepted. To the extent time permits, members of the public may present oral statements to the PECSEA. Written statements may be submitted at any time before or after the meeting. However, to facilitate distribution of public presentation materials to PECSEA members, the PECSEA suggests that public presentation materials or comments be forwarded before the meeting to Ms. Yvette Springer at *Yvette.Springer@bis.doc.gov.*

For more information, contact Yvette Springer on 202–482–2813.

Dated: October 20, 2011.

Kevin J. Wolf,

Assistant Secretary for Export Administration.

[FR Doc. 2011–27821 Filed 10–26–11; 8:45 am]

BILLING CODE 3510–JT–P

DEPARTMENT OF COMMERCE

International Trade Administration

[A–570–928]

Uncovered Innerspring Units From the People's Republic of China: Extension of Time Limit for the Preliminary Results of the Administrative Review

AGENCY: Import Administration, International Trade Administration, Department of Commerce.

DATES: *Effective Date:* October 27, 2011.

FOR FURTHER INFORMATION CONTACT: Susan Pulongbarit, AD/CVD Operations, Office 9, Import Administration, International Trade Administration, U.S. Department of Commerce, 14th Street and Constitution Avenue NW., Washington, DC 20230; *telephone:* (202) 482–4031.

SUPPLEMENTARY INFORMATION:

Background

On March 31, 2011, the Department of Commerce (''Department'') published in the **Federal Register** a notice of initiation of an administrative review of uncovered innerspring units from the People's Republic of China (''PRC''), covering the period February 1, 2010, through January 31, 2011. *See Initiation of Antidumping Duty Administrative Reviews, Requests for Revocation in Part, and Deferral of Administrative Review,* 76 FR 17825 (March 31, 2011). The preliminary results of the review for uncovered innerspring units from the PRC are currently due no later than October 31, 2011.

Statutory Time Limits

In antidumping duty administrative reviews, section 751(a)(3)(A) of the Tariff Act of 1930, as amended (''the Act''), requires the Department to make a preliminary determination within 245 days after the last day of the anniversary month of an order for which a review is requested and a final determination within 120 days after the date on which the preliminary results are published. However, if it is not practicable to complete the review within these time periods, section 751(a)(3)(A) of the Act allows the Department to extend the time limit for the preliminary determination to a maximum of 365 days after the last day of the anniversary month.

Extension of Time Limit for Preliminary Results of Review

We determine that it is not practicable to complete the preliminary results of this administrative review within the original time limit because the Department requires additional time to evaluate the no-shipment claim and non-responsive company issues.

Therefore, the Department is extending the time limit for completion of the preliminary results of the administrative review by 30 days. The preliminary results will now be due no later than November 30, 2011, the first business day following 30 days from the current deadline. The final results continue to be due 120 days after the publication of the preliminary results.

We are issuing and publishing this notice in accordance with sections 751(a)(3)(A) and 777(i)(1) of the Act.

Dated: October 21, 2011.

Christian Marsh,

Deputy Assistant Secretary for Antidumping and Countervailing Duty Operations.

[FR Doc. 2011–27855 Filed 10–26–11; 8:45 am]

BILLING CODE 3510–DS–P

DEPARTMENT OF COMMERCE

International Trade Administration

[A–570–851]

Certain Preserved Mushrooms From the People's Republic of China: Extension of Time Limit for Preliminary Results of Antidumping Duty Administrative Review

AGENCY: Import Administration, International Trade Administration, Department of Commerce.

DATES: *Effective Date:* October 27, 2011.

FOR FURTHER INFORMATION CONTACT: Michael J. Heaney or Robert James, AD/CVD Operations Office 7, Import Administration, International Trade Administration, U.S. Department of Commerce, 14th Street and Constitution Avenue, NW., Washington, DC 20230; telephone: (202) 482–4475 or (202) 482–0649, respectively.

SUPPLEMENTARY INFORMATION:

Background

On March 31, 2011, the Department of Commerce (the Department) published in the **Federal Register** the initiation of administrative review of the antidumping duty order on certain preserved mushrooms from the People's Republic of China, covering the period of February 1, 2010, through January 31, 2011. *See Initiation of Antidumping Administrative Reviews, Request for Revocation in Part, and Deferral of Administrative Review,* 76 FR 17825 (March 31, 2011). The current deadline for the preliminary results of this review is October 31, 2011.

Extension of Time Limits for Preliminary Results of Review

Section 751(a)(3)(A) of the Tariff Act of 1930, as amended (the Act), requires that the Department complete the preliminary results of an administrative review within 245 days after the last day of the anniversary month of an order for which a review is requested. However, if it is not practicable to complete the review within this time period, section 751(a)(3)(A) of the Act allows the Department to extend the time limit for the preliminary results to a maximum of 365 days after the last day of the anniversary month of an order for which a review is requested.

The Department finds that it is not practicable to complete the preliminary results of this review within the original time frame because comments from interested parties have necessitated the solicitation and subsequent analysis of additional information from both respondents: Blue Field (Sichuan) Food Industrial Co., Ltd and Dujiangyan Xingda Foodstuff Co., Ltd. This additional information covers a wide range of issues including the proper method for valuing numerous production inputs. The Department requires additional time to gather and analyze the additional information necessary to complete this review. Thus, the Department finds it is not practicable to complete this review within the original time limit (*i.e.,* by October 31, 2011).

Accordingly, the Department is extending the time limit for completion of the preliminary results of this administrative review by 120 days (*i.e.,* until February 28, 2012), in accordance with section 751(a)(3)(A) of the Act. We intend to issue the final results no later than 120 days after publication of the preliminary results notice.

This extension is issued and published in accordance with sections 751(a)(3)(A) and 777(i) of the Act.

Dated: October 20, 2011.

Christian Marsh,

Deputy Assistant Secretary for Antidumping and Countervailing Duty Operations.

[FR Doc. 2011–27747 Filed 10–26–11; 8:45 am]

BILLING CODE 3510–DS–P

DEPARTMENT OF COMMERCE

International Trade Administration

[A–421–811]

Purified Carboxymethylcellulose From the Netherlands: Final Results of Antidumping Duty Administrative Review

AGENCY: Import Administration, International Trade Administration, Department of Commerce.

SUMMARY: On June 22, 2011, the Department of Commerce (the Department) published in the **Federal Register** its preliminary results in the antidumping duty administrative review of purified carboxymethylcellulose (CMC) from the Netherlands, covering the period July 1, 2009, through June 30, 2010. *See Purified Carboxymethylcellulose from the Netherlands; Preliminary Results of Antidumping Duty Administrative Review,* 76 FR 36519 (June 22, 2011) (*Preliminary Results*). The merchandise covered by the order is purified CMC, as described in the ''Scope of the Order'' section of this notice. The Department gave interested parties an opportunity to comment on the *Preliminary Results.* We received comments from an interested party on July 5, 2011, and, in light of these comments, have made changes to our margin calculations. Thus, the final results differ from those published in the Department's *Preliminary Results.* The final weighted-average dumping margin for the reviewed firm is listed below in the section entitled ''Final Results of the Review.''

DATES: *Effective Date:* October 27, 2011.

FOR FURTHER INFORMATION CONTACT: Dena Crossland, David Cordell, or Angelica Mendoza, AD/CVD Operations, Office 7, Import Administration, International Trade Administration, U.S. Department of Commerce, 14th Street and Constitution Avenue, NW., Washington, DC 20230; *telephone:* (202) 482–3362, (202) 482–0408, or (202) 482–3019, respectively.

SUPPLEMENTARY INFORMATION:

Background

On June 22, 2011, the Department published the preliminary results of the administrative review of the antidumping duty order on purified CMC from the Netherlands. *See Preliminary Results.* The respondent under review is Akzo Nobel Functional Chemicals B.V. (ANFC). The petitioner in this proceeding is Aqualon Company, a unit of Hercules Inc. We invited interested parties to comment on the *Preliminary Results* following the publication of the preliminary results. *See Preliminary Results* at 36524.

On July 5, 2011, petitioner submitted a letter in lieu of a case brief. ANFC did not file any comments on the *Preliminary Results* and no party requested a hearing concerning the review.

Scope of the Order

The merchandise covered by the order is all purified CMC, sometimes also referred to as purified sodium CMC, polyanionic cellulose, or cellulose gum, which is a white to off-white, non-toxic, odorless, biodegradable powder, comprising sodium CMC that has been refined and purified to a minimum assay of 90 percent. Purified CMC does not include unpurified or crude CMC, CMC Fluidized Polymer Suspensions, and CMC that is cross-linked through heat treatment. Purified CMC is CMC that has undergone one or more purification operations which, at a minimum, reduce the remaining salt and other by-product portion of the product to less than ten percent. The merchandise subject to the order is currently classified in the Harmonized Tariff Schedule of the United States at subheading 3912.31.00. This tariff classification is provided for convenience and Customs purposes; however, the written description of the scope of the order is dispositive.

Period of Review

The period of review (POR) is July 1, 2009, through June 30, 2010.

Analysis of Comments Received

All issues raised in petitioner's letter in lieu of a case brief are addressed in the ''Issues and Decision Memorandum for the Final Results of the 2009/2010 Antidumping Duty Administrative Review of Purified Carboxymethylcellulose from the Netherlands,'' from Christian Marsh, Deputy Assistant Secretary for Antidumping and Countervailing Duty Operations, to Ronald K. Lorentzen, Deputy Assistant Secretary for Import Administration, dated October 20, 2011 (Issues and Decision Memorandum), which is hereby adopted by this notice. A list of the issues raised is attached to this notice as Appendix I. The Issues and Decision Memorandum is a public document and is on file electronically via Import Administration's Antidumping and Countervailing Duty Centralized Electronic Service System (IA ACCESS). Access to IA ACCESS is available in the Central Records Unit (CRU), room 7046 of the main Department of Commerce building. In addition, a complete version of the Issues and Decision Memorandum can be accessed directly on the Internet at *http://www.trade.gov/ia/.* The signed Issues and Decision Memorandum and the electronic versions of the Issues and Decision Memorandum are identical in content.

Changes Since the Preliminary Results

Based on our analysis of the comments received from petitioner, we have made the following changes in calculating ANFC's dumping margin for the final results: (1) We corrected the margin program with respect to ANFC's U.S. packing expenses by converting the Euro-denominated expenses into U.S. dollars; and (2) we revised ANFC's cost of manufacturing by using the latest major input information supplied by respondent. *See* Issues and Decision Memorandum at Comments 2 and 3. For further details on how the changes were applied in the margin calculation, *see* Memorandum to the File, from David Cordell and Dena Crossland, International Trade Analysts, through Angelica Mendoza, Program Manager, entitled ''Analysis of Data Submitted by Akzo Nobel Functional Chemicals B.V. (ANFC) in the Final Results of the 2009–2010 Administrative Review of the Antidumping Duty Order on Purified Carboxymethylcellulose (CMC) from the Netherlands,'' dated October 20, 2011; *see also* Memorandum to Neal M. Halper from Christopher J. Zimpo, ''Regarding the Antidumping Duty Administrative Review of Purified Carboxymethylcellulose (''CMC'') from the Netherlands, Cost of Production and Constructed Value Calculation Adjustments for the Final Results—Akzo Nobel Functional Chemicals B.V.,'' dated October 20, 2011.

Final Results of the Review

We determine the following percentage weighted-average margin to exist for the period July 1, 2009, through June 30, 2010:

Manufacturer/exporter	Weighted-average margin (percentage)
Akzo Nobel Functional Chemicals B.V.	3.57

Assessment

The Department shall determine, and U.S. Customs and Border Protection (CBP) shall assess, antidumping duties on all appropriate entries. In accordance with 19 CFR 351.212(b)(1), the Department normally calculates an assessment rate for each importer of the subject merchandise covered by the

review. In this review, we have calculated, whenever possible, an importer-specific assessment rate or value for merchandise subject to this review as described below.

As noted in the *Preliminary Results,* all of ANFC's U.S. sales of CMC were constructed-export-price sales (*e.g.,* sales through ANFC's U.S. affiliate to the unaffiliated purchaser in the United States). Accordingly, we divided the total dumping margins for the reviewed sales by the total entered value of those reviewed sales for each importer. We will direct CBP to assess the resulting percentage margin against the entered customs values for the subject merchandise on each importer's respective POR entries. *See* 19 CFR 351.212(b).

The calculated *ad valorem* rates will be assessed uniformly on all entries made by the respective importers during the POR. Where the assessment rate is above *de minimis,* we will instruct CBP to assess duties on all entries of subject merchandise by that importer.

The Department clarified its ''automatic assessment'' regulation on May 6, 2003. This clarification will apply to entries of subject merchandise during the POR produced by reviewed companies for which these companies did not know their merchandise was destined for the United States. In such instances, we will instruct CBP to liquidate unreviewed entries at the all-others rate if there is no rate for the intermediate company(ies) involved in the transaction. For a full discussion of this clarification, *see Antidumping and Countervailing Duty Proceedings: Assessment of Antidumping Duties,* 68 FR 23954 (May 6, 2003).

The Department intends to issue assessment instructions directly to CBP 15 days after publication of these final results of review.

Cash Deposit Requirements

The following cash-deposit requirements will be effective upon publication of this notice of final results of administrative review for all shipments of purified CMC from the Netherlands entered, or withdrawn from warehouse, for consumption on or after the date of publication, as provided by section 751(a)(2)(C) of the Act: (1) The cash-deposit rate for ANFC will be the rate established in the final results of this review; (2) for previously reviewed or investigated companies not covered in this review, the cash deposit rate will continue to be the company-specific rate published for the most recent period; (3) if the exporter is not a firm covered in this or any previous review or in the less-than-fair-value (LTFV) investigation but the manufacturer is, the cash-deposit rate will be the rate established for the most recent period for the manufacturer of the merchandise; and (4) if neither the exporter nor the manufacturer is a firm covered in this or any previous review or the investigation, the cash-deposit rate will continue to be the all-others rate of 14.57 percent, which is the all-others rate established by the Department in the LTFV investigation. *See Notice of Antidumping Duty Orders: Purified Carboxymethylcellulose from Finland, Mexico, the Netherlands and Sweden,* 70 FR 39734 (July 11, 2005). These cash-deposit requirements, when imposed, shall remain in effect until further notice.

Notification to Importers

This notice also serves as a final reminder to importers of their responsibility under 19 CFR 351.402(f)(2) to file a certificate regarding the reimbursement of antidumping duties prior to liquidation of the relevant entries during this review period. Failure to comply with this requirement could result in the Department's presumption that reimbursement of antidumping duties occurred and the subsequent assessment of doubled antidumping duties.

Notification Regarding Administrative Protective Orders

This notice also serves as a reminder to parties subject to administrative protective orders (APO) of their responsibility concerning the return or destruction of proprietary information disclosed under APO in accordance with 19 CFR 351.305(a)(3). Timely, written notification of the return or destruction of APO materials or conversion to judicial protective order is hereby requested. Failure to comply with the regulations and terms of an APO is a violation that is subject to sanction.

We are issuing and publishing this notice in accordance with sections 751(a)(1) and 777(i)(1) of the Act.

Dated: October 20, 2011.

Ronald K. Lorentzen,

Deputy Assistant Secretary for Import Administration.

Appendix I

Comments in the Issues and Decision Memorandum:

Comment 1: Calculation of the General and Administrative Expense Ratio

Comment 2: Calculation of Major Input Adjustment

Comment 3: U.S. Packing Expense Clerical Error

[FR Doc. 2011–27870 Filed 10–26–11; 8:45 am]

BILLING CODE 3510–DS–P

DEPARTMENT OF COMMERCE

International Trade Administration

[A–588–850]

Certain Large Diameter Carbon and Alloy Seamless Standard, Line, and Pressure Pipe (Over 4½ Inches) From Japan: Final Results of the Antidumping Duty Administrative Review

AGENCY: Import Administration, International Trade Administration, Department of Commerce.

SUMMARY: On July 7, 2011, the U.S. Department of Commerce (''the Department'') published its preliminary results of the administrative review of the antidumping duty order on certain large diameter carbon and alloy seamless standard, line, and pressure pipe (over 4 ½ inches) from Japan. The review covers four manufacturers/exporters: JFE Steel Corporation (''JFE''); Nippon Steel Corporation (''Nippon''); NKK Tubes (''NKK''); and Sumitomo Metal Industries, Ltd. (''SMI''). The period of review (''POR'') is June 1, 2009, through May 31, 2010. We received no comments on our preliminary results. Therefore, the final results do not differ from the preliminary results. We have reached a final determination of no shipments by the respondents in this administrative review. We will instruct U.S. Customs and Border Protection (''CBP'') to assess antidumping duties on all appropriate entries.

DATES: *Effective Date:* October 27, 2011.

FOR FURTHER INFORMATION CONTACT: Joshua Morris, AD/CVD Operations, Office 1, Import Administration, International Trade Administration, U.S. Department of Commerce, 14th Street and Constitution Avenue, NW., Washington, DC 20230; *telephone:* (202) 482–1779.

SUPPLEMENTARY INFORMATION:

Background

On July 7, 2011, the Department published the preliminary results of the administrative review of the antidumping duty order on carbon and alloy seamless standard, line, and pressure pipe (over 4½ inches) from Japan for the period June 1, 2009, through May 31, 2010. *See Certain Large Diameter Carbon and Alloy Seamless Standard, Line, and Pressure Pipe (Over 4 ½ Inches) From Japan: Final Results*

of the Antidumping Duty Administrative Review, 76 FR 39852 (July 7, 2011) (''preliminary results''). We invited interested parties to comment on our preliminary results. We received no comments.

Scope of the Order

The products covered by the order are large diameter seamless carbon and alloy (other than stainless) steel standard, line, and pressure pipes produced, or equivalent, to the American Society for Testing and Materials (''ASTM'') A–53, ASTM A–106, ASTM A–333, ASTM A–334, ASTM A–589, ASTM A–795, and the American Petroleum Institute (''API'') 5L specifications and meeting the physical parameters described below, regardless of application. The scope of the order also includes all other products used in standard, line, or pressure pipe applications and meeting the physical parameters described below, regardless of specification, with the exception of the exclusions discussed below. Specifically included within the scope of the order are seamless pipes greater than 4.5 inches (114.3 mm) up to and including 16 inches (406.4 mm) in outside diameter, regardless of wall-thickness, manufacturing process (hot finished or cold-drawn), end finish (plain end, beveled end, upset end, threaded, or threaded and coupled), or surface finish.

The seamless pipes subject to the order are currently classifiable under the subheadings 7304.10.10.30, 7304.10.10.45, 7304.10.10.60, 7304.10.50.50, 7304.19.10.30, 7304.19.10.45, 7304.19.10.60, 7304.19.50.50, 7304.31.60.10, 7304.31.60.50, 7304.39.00.04, 7304.39.00.06, 7304.39.00.08, 7304.39.00.36, 7304.39.00.40, 7304.39.00.44, 7304.39.00.48, 7304.39.00.52, 7304.39.00.56, 7304.39.00.62, 7304.39.00.68, 7304.39.00.72, 7304.51.50.15, 7304.51.50.45, 7304.51.50.60, 7304.59.20.30, 7304.59.20.55, 7304.59.20.60, 7304.59.20.70, 7304.59.60.00, 7304.59.80.30, 7304.59.80.35, 7304.59.80.40, 7304.59.80.45, 7304.59.80.50, 7304.59.80.55, 7304.59.80.60, 7304.59.80.65, and 7304.59.80.70 of the Harmonized Tariff Schedule of the United States (''HTSUS'').

Specifications, Characteristics, and Uses: Large diameter seamless pipe is used primarily for line applications such as oil, gas, or water pipeline, or utility distribution systems. Seamless pressure pipes are intended for the conveyance of water, steam, petrochemicals, chemicals, oil products, natural gas and other liquids and gasses in industrial piping systems. They may carry these substances at elevated pressures and temperatures and may be subject to the application of external heat. Seamless carbon steel pressure pipe meeting the ASTM A–106 standard may be used in temperatures of up to 1000 degrees Fahrenheit, at various American Society of Mechanical Engineers (''ASME'') code stress levels. Alloy pipes made to ASTM A–335 standard must be used if temperatures and stress levels exceed those allowed for ASTM A–106. Seamless pressure pipes sold in the United States are commonly produced to the ASTM A–106 standard.

Seamless standard pipes are most commonly produced to the ASTM A–53 specification and generally are not intended for high temperature service. They are intended for the low temperature and pressure conveyance of water, steam, natural gas, air and other liquids and gasses in plumbing and heating systems, air conditioning units, automatic sprinkler systems, and other related uses. Standard pipes (depending on type and code) may carry liquids at elevated temperatures but must not exceed relevant ASME code requirements. If exceptionally low temperature uses or conditions are anticipated, standard pipe may be manufactured to ASTM A–333 or ASTM A–334 specifications.

Seamless line pipes are intended for the conveyance of oil and natural gas or other fluids in pipe lines. Seamless line pipes are produced to the API 5L specification.

Seamless water well pipe (ASTM A–589) and seamless galvanized pipe for fire protection uses (ASTM A–795) are used for the conveyance of water.

Seamless pipes are commonly produced and certified to meet ASTM A–106, ASTM A–53, API 5L–B, and API 5L–X42 specifications. To avoid maintaining separate production runs and separate inventories, manufacturers typically triple or quadruple certify the pipes by meeting the metallurgical requirements and performing the required tests pursuant to the respective specifications. Since distributors sell the vast majority of this product, they can thereby maintain a single inventory to service all customers.

The primary application of ASTM A–106 pressure pipes and triple or quadruple certified pipes in large diameters is for use as oil and gas distribution lines for commercial applications. A more minor application for large diameter seamless pipes is for use in pressure piping systems by refineries, petrochemical plants, and chemical plants, as well as in power generation plants and in some oil field uses (on shore and off shore) such as for separator lines, gathering lines and metering runs. These applications constitute the majority of the market for the subject seamless pipes. However, ASTM A–106 pipes may be used in some boiler applications.

The scope of the order includes all seamless pipe meeting the physical parameters described above and produced to one of the specifications listed above, regardless of application, with the exception of the exclusions discussed below, whether or not also certified to a non-covered specification. Standard, line, and pressure applications and the above-listed specifications are defining characteristics of the scope of the order. Therefore, seamless pipes meeting the physical description above, but not produced to the ASTM A–53, ASTM A–106, ASTM A–333, ASTM A–334, ASTM A–589, ASTM A–795, and API 5L specifications shall be covered if used in a standard, line, or pressure application, with the exception of the specific exclusions discussed below.

For example, there are certain other ASTM specifications of pipe which, because of overlapping characteristics, could potentially be used in ASTM A–106 applications. These specifications generally include ASTM A–161, ASTM A–192, ASTM A–210, ASTM A–252, ASTM A–501, ASTM A–523, ASTM A–524, and ASTM A–618. When such pipes are used in a standard, line, or pressure pipe application, such products are covered by the scope of the order.

Specifically excluded from the scope of the order are: A. Boiler tubing and mechanical tubing, if such products are not produced to ASTM A–53, ASTM A–106, ASTM A–333, ASTM A–334, ASTM A–589, ASTM A–795, and API 5L specifications and are not used in standard, line, or pressure pipe applications. B. Finished and unfinished oil country tubular goods (''OCTG''), if covered by the scope of another antidumping duty order from the same country. If not covered by such an OCTG order, finished and unfinished OCTG are included in the scope when used in standard, line or pressure applications. C. Products produced to the A–335 specification unless they are used in an application that would normally utilize ASTM A–53, ASTM A–106, ASTM A–333, ASTM A–334, ASTM A–589, ASTM A–795, and API 5L specifications. D. Line and riser pipe for deepwater application, *i.e.,* line and riser pipe that is: (1) Used in a deepwater application, which means for

use in water depths of 1,500 feet or more; (2) intended for use in and is actually used for a specific deepwater project; (3) rated for a specified minimum yield strength of not less than 60,000 psi; and (4) not identified or certified through the use of a monogram, stencil, or otherwise marked with an API specification (*e.g.,* ''API 5L'').

With regard to the excluded products listed above, the Department will not instruct CBP to require end-use certification until such time as petitioner or other interested parties provide to the Department a reasonable basis to believe or suspect that the products are being utilized in a covered application. If such information is provided, we will require end-use certification only for the product(s) (or specification(s)) for which evidence is provided that such products are being used in a covered application as described above. For example, if, based on evidence provided by petitioner, the Department finds a reasonable basis to believe or suspect that seamless pipe produced to the A–335 specification is being used in an A–106 application, we will require end-use certifications for imports of that specification. Normally we will require only the importer of record to certify to the end use of the imported merchandise. If it later proves necessary for adequate implementation, we may also require producers who export such products to the United States to provide such certification on invoices accompanying shipments to the United States.

Although the HTSUS subheadings are provided for convenience and customs purposes, our written description of the merchandise subject to this scope is dispositive.

Final Determination of No Shipments

As we stated in the preliminary results, our practice concerning no-shipment respondents had been to rescind the administrative review if the respondent certifies that it had no shipments and we have confirmed through our examination of CBP data that there were no shipments of subject merchandise during the POR. *See* 19 CFR 351.213(d)(3); *see also Oil Country Tubular Goods from Japan: Preliminary Results of Antidumping Duty Administrative Review and Partial Rescission of Review,* 70 FR 53161, 53161–53163 (September 7, 2005), unchanged in *Oil Country Tubular Goods from Japan: Final Results and Partial Rescission of Antidumping Duty Administrative Review,* 71 FR 95 (January 3, 2006). In such circumstances, we normally instructed CBP to liquidate any entries from the no-shipment company at the deposit rate in effect on the date of entry.

In our May 6, 2003, ''automatic assessment'' clarification, we explained that, where respondents in an administrative review demonstrate that they had no knowledge of sales through resellers to the United States, we would instruct CBP to liquidate such entries at the all-others rate applicable to the proceeding. *See Antidumping and Countervailing Duty Proceedings: Assessment of Antidumping Duties,* 68 FR 23954 (May 6, 2003) (''*Assessment Policy Notice''*).

As we stated in the preliminary results, because ''as entered'' liquidation instructions do not alleviate the concerns which the May 6, 2003, clarification was intended to address, we find it appropriate in this case to instruct CBP to liquidate any existing entries of merchandise produced by Nippon, JFE, SMI, or NKK, and exported by other parties at the all-others rate. In addition, we continue to find it is more consistent with the May 6, 2003, clarification not to rescind the review in these circumstances but, rather, to complete the review with respect to Nippon, JFE, SMI, and NKK, and issue appropriate instructions to CBP based on the final results of the review. *See* the ''Assessment Rates'' section of this notice below.

Assessment Rates

The Department intends to issue assessment instructions directly to CBP 15 days after the date of publication of these final results of this review.

As noted above, the Department clarified its ''automatic assessment'' regulation on May 6, 2003. *See Assessment Policy Notice.* This clarification will apply to POR entries by all respondent companies because they certified that they made no POR shipments of subject merchandise for which they had knowledge of U.S. destination. We will instruct CBP to liquidate these entries at the all-others rate established in the less-than-fair-value investigation (68.88 percent) if there is no rate for the intermediary involved in the transaction. *See Assessment Policy Notice* for a full discussion of this clarification.

Notification to Importers

This notice serves as a final reminder to importers of their responsibility under 19 CFR 351.402(f) to file a certificate regarding the reimbursement of antidumping duties prior to liquidation of the relevant entries during this review period. Failure to comply with this requirement could result in the Department's presumption that reimbursement of antidumping duties occurred and the subsequent assessment of doubled antidumping duties.

Notification Regarding APOs

This notice also serves as a reminder to parties subject to administrative protective order (''APO'') of their responsibility concerning the disposition of proprietary information disclosed under APO in accordance with 19 CFR 351.305(a)(3). Timely notification of destruction of APO materials or conversion to judicial protective order is hereby requested. Failure to comply with the regulations and the terms of an APO is a sanctionable violation.

These final results of administrative review and notice are issued and published in accordance with sections 751(a)(1) and 777(i)(1) of the Act.

Dated: October 20, 2011.

Ronald K. Lorentzen,

Deputy Assistant Secretary for Import Administration.

[FR Doc. 2011–27872 Filed 10–26–11; 8:45 am]

BILLING CODE 3510–DS–P

DEPARTMENT OF COMMERCE

International Trade Administration

[A–821–801]

Solid Urea From the Russian Federation: Final Results of Antidumping Duty Administrative Review

AGENCY: Import Administration, International Trade Administration, Department of Commerce.

SUMMARY: On June 17, 2011, the Department of Commerce (the Department) published the preliminary results of the administrative review of the antidumping duty order on solid urea from the Russian Federation. The solid urea subject to this review was produced and exported by MCC EuroChem (EuroChem). The period of review (POR) is July 1, 2009, through June 30, 2010.

Based on our analysis of comments received, we have not made any changes in the margin calculation for EuroChem. The final weighted-average dumping margin for EuroChem is listed below in the section entitled ''Final Results of the Administrative Review.''

DATES: *Effective Date:* October 27, 2011.

FOR FURTHER INFORMATION CONTACT: Dustin Ross or Minoo Hatten, AD/CVD Operations, Office 1, Import Administration, International Trade Administration, U.S. Department of

Commerce, 14th Street and Constitution Avenue NW., Washington DC 20230; *telephone:* (202) 482–0747 and (202) 482–1690, respectively.

SUPPLEMENTARY INFORMATION:

Background

On June 17, 2011, the Department published the *Preliminary Results* of the administrative review of the antidumping duty order on solid urea from the Russian Federation. *See Solid Urea From the Russian Federation: Preliminary Results of Antidumping Duty Administrative Review,* 76 FR 35405 (June 17, 2011) (*Preliminary Results*).

On August 9, 2011, we received a case brief from the petitioners [1] and a letter in lieu of a case brief from EuroChem. On August 18, 2011, we received rebuttal briefs from the petitioners and from EuroChem. There were no requests for a hearing.

Scope of the Order

The merchandise subject to the antidumping duty order is solid urea, a high-nitrogen content fertilizer which is produced by reacting ammonia with carbon dioxide. The product is currently classified under the Harmonized Tariff Schedule of the United States (HTSUS) item number 3102.10.00.00. Previously such merchandise was classified under item number 480.3000 of the Tariff Schedules of the United States. Although the HTSUS subheading is provided for convenience and customs purposes, the written description of the merchandise is dispositive.

Analysis of Comments Received

All issues raised in the petitioners' case brief and EuroChem's letter in lieu of a case brief are addressed in the Issues and Decision Memorandum which is hereby adopted by this notice. A list of the issues raised is attached to this notice as Appendix I. The Issues and Decision Memorandum is a public document and is on file electronically via Import Administration's Antidumping and Countervailing Duty Centralized Electronic Service System (IA ACCESS). Access to IA ACCESS is available in the Central Records Unit (CRU), room 7046 of the main Department of Commerce building. In addition, a complete version of the Issues and Decision Memorandum can be accessed directly on the Internet at *http://www.trade.gov/ia/.* The signed Issues and Decision Memorandum and the electronic versions of the Issues and Decision Memorandum are identical in content.

Final Results of the Administrative Review

We determine that the weighted-average margin on solid urea from the Russian Federation produced and exported by EuroChem for the period July 1, 2009, through June 30, 2010, is 1.17 percent.

Assessment Rates

The Department shall determine and U.S. Customs and Border Protection (CBP) shall assess antidumping duties on all appropriate entries. In accordance with 19 CFR 351.212(b)(1), we have calculated an importer-specific assessment rate for EuroChem reflecting these final results of review.

The Department clarified its ''automatic assessment'' regulation on May 6, 2003. This clarification will apply to entries of subject merchandise during the POR produced by EuroChem for which EuroChem did not know its merchandise was destined for the United States. In such instances, we will instruct CBP to liquidate unreviewed entries of merchandise produced by EuroChem at the all-others rate if there is no rate for the intermediate company(ies) involved in the transaction. For a full discussion of this clarification, *see Antidumping and Countervailing Duty Proceedings: Assessment of Antidumping Duties,* 68 FR 23954 (May 6, 2003).

The Department intends to issue instructions to CBP 15 days after the publication of these final results of review.

Cash-Deposit Requirements

The following cash-deposit requirements will be effective upon publication for all shipments of the subject merchandise entered, or withdrawn from warehouse, for consumption on or after the publication date of the final results of this review, as provided by section 751(a)(2)(C) of the Tariff Act of 1930, as amended (the Act): (1) The cash-deposit rate for EuroChem will be 1.17 percent; (2) for previously reviewed or investigated companies not listed above, the cash-deposit rate will continue to be the company-specific rate published for the most recent period; (3) if the exporter is not a firm covered in this review, a prior review, or the original less-than-fair-value (LTFV) investigation but the manufacturer is, the cash-deposit rate will be the rate established for the most recent period for the manufacturer of the merchandise; (4) the cash-deposit rate for all other manufacturers or exporters will continue to be 64.93 percent, the all-others rate established in the LTFV investigation. *See Urea From the Union of Soviet Socialist Republics; Final Determination of Sales at Less Than Fair Value,* 52 FR 19557, 19561 (May 26, 1987). Following the break-up of the Soviet Union, the antidumping duty order on solid urea from the Soviet Union was transferred to the individual members of the Commonwealth of Independent States. *See Solid Urea From the Union of Soviet Socialist Republics; Transfer of the Antidumping Order on Solid Urea From the Union of Soviet Socialist Republics to the Commonwealth of Independent States and the Baltic States and Opportunity to Comment,* 57 FR 28828 (June 29, 1992). The rate established in the LTFV investigation for the Soviet Union was applied to each new independent state, including the Russian Federation. These cash-deposit requirements shall remain in effect until further notice.

Notifications

This notice serves as a final reminder to importers of their responsibility under 19 CFR 351.402(f) to file a certificate regarding the reimbursement of antidumping duties prior to liquidation of the relevant entries during this review period. Failure to comply with this requirement could result in the Department's presumption that reimbursement of antidumping duties occurred and the subsequent assessment of doubled antidumping duties.

This notice also serves as a reminder to parties subject to administrative protective order (APO) of their responsibility concerning the disposition of proprietary information disclosed under APO in accordance with 19 CFR 351.305(a)(3). Timely notification of destruction of APO materials or conversion to judicial protective order is hereby requested. Failure to comply with the regulations and the terms of an APO is a sanctionable violation.

We are issuing and publishing these results in accordance with sections 751(a)(1) and 777(i) of the Act.

Dated: October 17, 2011.

Ronald K. Lorentzen,

Deputy Assistant Secretary for Import Administration.

Appendix

Comment 1: Affiliation of EuroChem's Franchisees

Comment 2: Freight and Transportation Revenue

Comment 3: Imputed Credit Expenses

[1] The Ad Hoc Committee of Domestic Nitrogen Producers and its individual urea-producing members, CF Industries, Inc., and PCS Nitrogen.

Comment 4: Publication of Final Results
Comment 5: Zeroing

[FR Doc. 2011–27446 Filed 10–26–11; 8:45 am]
BILLING CODE 3510–DS–P

DEPARTMENT OF COMMERCE

International Trade Administration

Executive-Led Trade Mission to Afghanistan

AGENCY: International Trade Administration, Department of Commerce.
ACTION: Notice.

Mission Description

The United States Department of Commerce's International Trade Administration is organizing a business development trade mission to Kabul, Afghanistan in February 2012. This mission will be led by a Senior Commerce Department official. Targeted sectors include: Construction (including engineering, architecture, transportation and logistics, and infrastructure); mining (including equipment, technology, and services); agribusiness; and information and communications technology. The mission's goal is to help U.S. companies explore long-term business opportunities in Afghanistan and enhance U.S.—Afghan commercial relations by providing U.S. participants with first-hand market information, access to government decision makers as well as one-on-one meetings with business contacts, including potential agents, distributors, and partners, to position themselves to enter or expand their presence in the targeted sectors.

Commercial Setting

The Government of the Islamic Republic of Afghanistan (GIRoA) is taking steps to develop its market economy and increase both domestic and foreign private investment. GIRoA continues to develop legal and administrative regulatory frameworks that will lead to a market more conducive to trade, investment and private sector development. For example, Afghanistan adopted an investment law that allows investments to be 100% foreign-owned. Additionally, on October 28, 2010, Afghanistan and Pakistan signed the Afghanistan Pakistan Transit Trade Agreement (APTTA), allowing Afghan container trucks to drive through Pakistan to the Indian border, and also to port cities such as Karachi.

After of 30 years of war require reconstruction and development efforts are required to grow and stabilize Afghanistan's economy. The GIRoA is committed to promoting economic development, increasing production and earnings, promoting technology transfer, improving national prosperity and advancing Afghans' standard of living in partnership with international donor agencies. GIRoA recognizes that U.S. services, equipment and technology would enhance development of Afghanistan's industrial sector and lead to increased productivity and greater technical skills for Afghan citizens. International donors continue to support Afghanistan's development; however, long-term sustainable growth will take place through private sector development.

To support Afghanistan's private sector and promote reconstruction efforts, GIRoA has identified domestic priority sectors needing investment and development in both equipment and services. These priority sectors are: Construction and infrastructure, logistics and transportation, mining, agribusiness, and information and communications technology providers.

The economy is beginning to move from one based on state owned enterprises and the informal economy to a more formal market economy. A notable sign of this transition for the U.S. business community is the establishment of an American Chamber of Commerce in Kabul in 2010.

Kabul is the capital of Afghanistan, situated in Kabul Province. With a total metropolitan population of 2.6 million, it is also the largest city in Afghanistan. It is the commercial center for the country, with national Afghan businesses, associations, and GIRoA ministries maintaining a presence in Kabul. Afghanistan's GDP per capita is approximately $500, and has experienced double digit growth in recent years.

The Commerce Department has supported commercial and private sector development in Afghanistan since 2002, and posted a Senior Commercial Officer in Kabul in June 2010.

Mission Goals

The goal of the mission is to provide U.S. participants with first-hand market information, access to government decision makers and one-on-one meetings with business contacts, including potential agents, distributors, and partners, so that they can position themselves to enter the Afghan market or expand their business presence in Afghanistan. Thus, the mission seeks to:

- Improve U.S. companies' understanding of commercial opportunities in Afghanistan.
- Facilitate business meetings between U.S. and Afghan businesses to promote the development of U.S. commercial opportunities in Afghanistan.
- Introduce U.S. industry to the Afghan business community and government leaders.
- Provide GIRoA policymakers with U.S. industry feedback on the direction of its commercial reforms.

Mission Scenario

The business development mission will take place in Kabul, Afghanistan. Participants will meet with Afghan leaders in the public and private sector, learn about the market by participating in Embassy briefings, and explore additional opportunities at networking receptions. Activities will include one-on-one meetings with pre-screened business prospects. (Note that the regular workweek in Afghanistan is Sunday through Thursday.)

Proposed Timetable

(The State Department will follow RSO procedure in reference to security within and around the mission event.)

Day One (weekend) Travel Day—Depart U.S. on evening flight
Day Two Travel Day—Participants arrive in transit city (tbd) and overnight in pre-arranged departure from transit city
Day Three Travel Day, Arrive in Kabul, Afghanistan (afternoon) Evening Event
Day Four Security Briefing, Market Briefing, One-on-One Business Appointments, Reception
Day Five Market Briefing, Industry Sector Briefing, Meetings with Government and Industry Officials, One-on-One Business Appointments, Reception
Day Six One-on-One Business Appointments (optional), Travel Day—Depart for the U.S. (evening)
Day Seven Travel Day—Arrive in U.S. (morning)

Participation Requirements

This business development mission is designed for a minimum of 10 qualified companies and can accommodate a maximum of 20 participants from the companies accepted. All parties interested in participating in this business development mission to Kabul, Afghanistan, must submit a completed application package for consideration by the U.S. Department of Commerce. All applicants will be evaluated on their ability to meet certain conditions and to best satisfy the selection criteria as outlined below. U.S. companies already doing business in the target sectors as

well as U.S. companies seeking to enter this market for the first time are encouraged to apply.

Fees and Expenses:

After a company has been selected to participate in the mission, a payment to the U.S. Department of Commerce in the form of a participation fee is required. The participation fee is $4,800 for a single participant for a small- or medium-sized enterprise (SME) [1] and $5,245 for a single participant for a large firm. Participants per company will be limited due to space constraints. The fee for each additional participant is $1,500. Applicants are encouraged to provide a clear business purpose and clarification of role of any additional participants proposed to participate in the mission.

Interpretation services for official activities are included in the fee. Expenses for travel, lodging, meals, and incidentals will be the responsibility of each mission participant. Lodging and meals for each participant will cost approximately $150 USD per day.

Conditions for Participation:

- An applicant must submit a completed and signed mission application and supplemental application materials, including information on the company's products and/or services, primary market objectives, and goals for participation. If the U.S. Department of Commerce receives an incomplete application, the Department may reject the application, request additional information, or take the lack of information into account when evaluating the application.
- Each applicant must also certify that the products and services it seeks to export through the mission are either produced in the United States, or, if not, marketed under the name of a U.S. firm and have at least fifty-one percent U.S. content.

Selection Criteria for Participation:

Selection will be based on the following criteria:

- Suitability of the company's products or services to the mission goals.
- Applicant's potential for business in Afghanistan.
- Consistency of the applicant's goals and objectives with the stated scope of the mission.

(Additional factors, such as diversity of company, size, type and location, may be considered during the selection process)

Referrals from political organizations and any documents containing references to partisan political activities (including political contributions) will be removed from an applicant's submission and will not be considered during the selection process.

Timeframe for Recruitment and Applications

Mission recruitment will be conducted in an open and public manner, including posting on the U.S. Department of Commerce trade missions calendar—*http://www.trade.gov/trade-missions/*—and other Internet Web sites, publication in domestic trade publications and association newsletters, direct outreach to the Department's clients and distribution lists, publication in the **Federal Register,** and announcements at industry meetings, symposia, conferences, and trade shows.

Recruitment for the mission will begin immediately and conclude no later than January 3, 2012, by the close of business. Applications received after January 3, 2012, will be considered only if space and scheduling constraints permit.

Disclaimer, Security, and Transportation

Business development mission members participate in the mission and undertake related travel at their own risk and are advised to obtain insurance accordingly. Any question regarding insurance coverage must be resolved by the participant. The U.S. Government does not make any representations or guarantees as to the safety or security of participants. Companies should consult the State Department's travel warning for Afghanistan: *http://travel.state.gov/travel/cis_pa_tw/tw/tw_2121.html; http://travel.state.gov/travel/cis_pa_tw/tw/tw_2121.html.*

ITA will coordinate with the U.S. Embassy in Kabul to arrange for transportation of the mission participants to and from the airport and lodging facilities. The primary venue for the mission has security measures in place.

Contact: Ariana Monti Marshall, Afghanistan Reconstruction and Investment Task Force—DC, Market Access and Compliance, *Tel:* (202) 482–3754, *Email: afghanmission2011@ ;trade.gov.*

Elnora Moye,

Trade Program Assistant.

[FR Doc. 2011–27864 Filed 10–26–11; 8:45 am]

BILLING CODE 3510–FP–P

[1] An SME is defined as a firm with 500 or fewer employees or that otherwise qualifies as a small business under SBA regulations. *See http://www.sba.gov/contractingopportunities/owners/basics/whatismallbusiness/index.html.* Parent companies, affiliates, and subsidiaries will be considered when determining business size. The dual pricing reflects the Commercial Service's user fee schedule that became effective May 1, 2008. *See http://www.export.gov/newsletter/march2008/initiatives.html.*

DEPARTMENT OF COMMERCE

International Trade Administration

President's Export Council: Meeting of the President's Export Council

AGENCY: International Trade Administration, U.S. Department of Commerce.

ACTION: Notice of an open meeting.

SUMMARY: The President's Export Council will hold a meeting to discuss topics related to the National Export Initiative, and to provide advice regarding how to promote U.S. exports, jobs, and growth.

DATES: November 16, 2011 at 9:30 a.m. (ET)

ADDRESSES: The President's Export Council will convene its next meeting via live webcast on the Internet at *http://whitehouse.gov/live.*

FOR FURTHER INFORMATION CONTACT: Michael Masserman, President's Export Council, Room 4043, 1401 Constitution Avenue NW., Washington, DC 20230, *telephone:* (202) 482–4501, *email: Michael.Masserman@trade.gov.*

SUPPLEMENTARY INFORMATION:

Background: The President's Export Council was first established by Executive Order on December 20, 1973 to advise the President on matters relating to U.S. export trade and report to the President on its activities and on its recommendations for expanding U.S. exports. The President's Export Council was renewed most recently by Executive Order 13585 of September 30, 2011, for the two-year period October 1, 2011 and ending September 30, 2013. This Committee is established in accordance with the provisions of the Federal Advisory Committee Act (FACA), as amended, 5 U.S.C. App.

Public Submissions: The public is invited to submit written statements to the President's Export Council by C.O.B. November 1, 2011 by either of the following methods:

Electronic Statements

Submit electronic statements via the President's Export Council Web site at *http://trade.gov/pec/peccomments.asp*; or

Paper Statements

Send paper statements to Michael Masserman, President's Export Council, Room 4043, 1401 Constitution Avenue NW., Washington, DC 20230.

All statements will be posted on the President's Export Council Web site (*http://trade.gov/pec/peccomments.asp*) without change, including any business or personal information provided such

as names, addresses, email addresses, or telephone numbers. All statements received, including attachments and other supporting materials, are part of the public record and subject to public disclosure. You should submit only information that you wish to make available publicly.

Meeting minutes: Copies of the Council's meeting minutes will be available within 90 days of the meeting and the meeting will be available for replay at *http://www.trade.gov/pec.*

Dated: October 24, 2011.

Michael Masserman,

President's Export Council.

[FR Doc. 2011–27852 Filed 10–26–11; 8:45 am]

BILLING CODE 3510–DR–P

DEPARTMENT OF COMMERCE

National Institute of Standards and Technology

[Docket No. 110727437–1613–02]

Extension of the Due Date for Submitting Comments on Research and Development Priorities for Desirable Features of a Nationwide Public Safety Broadband Network

AGENCY: National Institute of Standards and Technology (NIST), Department of Commerce.

ACTION: Request for Comments; extension.

SUMMARY: On September 12, 2011, NIST published a Request for Comment in the **Federal Register**, inviting interested parties to submit written comments on various possible features of a new nationwide interoperable public safety broadband network. The comments will be used by NIST to help determine research and development priorities in anticipation of the President's Wireless Innovation (WIN) Fund to help drive innovation of next-generation network technologies. NIST is publishing this notice to extend the deadline for the submission of comments pertaining to the September 12, 2011 notice until 5 p.m., Eastern Time, on Wednesday, October 26, 2011. No other changes are being made to the originally published Request for Comment.

DATES: Comments are due on or before 5 p.m., Eastern Time, on Wednesday, October 26, 2011. Comments received between 5 p.m. on October 12, 2011, and the publication date of this notice are deemed to be timely.

ADDRESSES: Comments should be sent to Dereck Orr, *dereck.orr@nist.gov.*

FOR FURTHER INFORMATION CONTACT: Dereck Orr, Office of Law Enforcement Standards, National Institute of Standards and Technology, 325 Broadway, Boulder, Colorado 80305, telephone number (303) 497–5400. Mr. Orr's e-mail address is *dereck.orr@nist.gov.*

SUPPLEMENTARY INFORMATION: The Obama Administration has announced its support for legislation that would create a not-for-profit Public Safety Broadband Corporation to oversee the deployment of a nationwide network that meets the needs of local, state, Tribal, and Federal public safety communities.[1] The Administration has also proposed a $3 billion WIN Fund to help drive innovation through research, experimentation, testbeds, and applied development. Of the $3 billion, $500 million will be devoted to research and development (R&D) for the new public safety broadband network.[2] The Public Safety Innovation Fund (PSIF), NIST's component of the proposed WIN Fund, helps spur the development of cutting-edge wireless technologies.

On September 12, 2011, NIST published a Request for Comment in the **Federal Register** (76 FR 56165), inviting interested parties to provide written comments on proposed features of a nationwide interoperable public safety broadband network for this R&D, which were identified by the NIST Visiting Committee on Advanced Technology with the input of public safety and their identified operational requirements. The due date for the submission of comments as set forth in the original Request for Comment was 5 p.m., Eastern Time, on October 12, 2011. NIST is extending the due date for submission of comments until 5 p.m., Eastern Time, on Wednesday, October 26, 2011 in order to provide interested parties additional time to submit their comments. Comments received between 5 p.m. on October 12, 2011, and the publication date of this notice are deemed to be timely. No other changes are being made to the originally published Request for Comment.

[1] Comments of the National Telecommunications and Information Administration before the Federal Communications Commission in the matter of Service Rules for the 698–747, 747–762 and 777–792 Band (WT Docket No. 06–150); Implementing a Nationwide, Broadband, Interoperable Public Safety Network in the 700 MHz Band (PS Docket No. 06–229); Amendment of Part 90 of the Commission's Rules (WP Docket No. 07–100). *http://www.ntia.doc.gov/filings/2011/NTIA_Public_Safety_Network_Comments_06102011.pdf.*

[2] President Obama Details Plan to Win the Future through Expanded Wireless Access. *http://www.whitehouse.gov/the-press-office/2011/02/10/president-obama-details-plan-win-future-throughexpanded-wireless-access.*

Dated: October 13, 2011.

Willie E. May,

Associate Director for Laboratory Programs.

[FR Doc. 2011–27781 Filed 10–26–11; 8:45 am]

BILLING CODE 3510–15–P

DEPARTMENT OF COMMERCE

National Oceanic and Atmospheric Administration

RIN 0648–XA793

New England Fishery Management Council (NEFMC); Public Meeting

AGENCY: National Marine Fisheries Service (NMFS), National Oceanic and Atmospheric Administration (NOAA), Commerce.

ACTION: Notice of a public meeting.

SUMMARY: The New England Fishery Management Council (Council) will hold a three-day meeting on November 15–17, 2011 to consider actions affecting New England fisheries in the exclusive economic zone (EEZ).

DATES: The meeting will be held on Tuesday, Wednesday and Thursday, November 15–17, starting at 9 a.m. on Tuesday, and at 8:30 a.m. on Wednesday and Thursday.

ADDRESSES: The meeting will be held at the Newport Marriott Hotel, 25 America's Cup Avenue, Newport, Rhode Island 02840; *telephone:* (401) 849–1000; *fax:* (401) 849–3422.

Council address: New England Fishery Management Council, 50 Water Street, Mill 2, Newburyport, MA 01950; *telephone:* (978) 465–0492.

FOR FURTHER INFORMATION CONTACT: Paul J. Howard, Executive Director, New England Fishery Management Council; *telephone:* (978) 465–0492.

SUPPLEMENTARY INFORMATION:

Tuesday, November 15, 2011

Following introductions and any announcements, brief reports will be presented by the NEFMC Chairman and Executive Director, NOAA Fisheries Regional Administrator (Northeast Region), Northeast Fisheries Science Center and Mid-Atlantic Fishery Management Council liaisons, NOAA General Counsel, representatives of the U.S. Coast Guard and the Atlantic States Marine Fisheries Commission, and staff from the Vessel Monitoring Systems Operations and Law Enforcement offices. A Coast Guard representative also will provide the Council with a report on the implementation of the Coast Guard Authorization Act. That discussion will be followed by a review of any experimental fishery permit

applications that have been made available since the September Council meeting. The Council will then consider a request from the Mid-Atlantic Council to include an option to establish a river herring catch cap for public comment in the Draft EIS for Amendment 5 to the Atlantic Herring Fishery Management Plan (FMP), consistent with the options in the Mid-Atlantic Fishery Management Council's Draft Amendment 14 to the Squid/Mackerel/Butterfish FMP. An open period for public comments will follow at which any interested party may provide brief comments on issues relevant to Council business but not listed on the meeting agenda.

Following a lunch break, the Council will receive an update from the Northeast Regional Ocean Council concerning coastal and marine spatial planning. Council and NMFS leadership will review further actions under consideration or being implemented to respond to the Touchstone Report on the fisheries management process in New England. The day will conclude with a review of progress to date on Essential Fish Habitat (EFH) Omnibus 2, which is focusing on the development of management alternatives to minimize the adverse effects of fishing activities on EFH.

Wednesday, November 16, 2011

The day will begin with further discussion and approval of the Council's 2012 fisheries management priorities. This will be followed by a summary report on and recommendations for observer sea-day allocations for the upcoming year. Concerning Framework Adjustment 23 to the Sea Scallop FMP, the Council may have an opportunity to review the draft regulatory text for the action (if available), and deem whether they are consistent with the action and the NEFMC's intent. This item will be followed by an update about the transition to a new stock assessment process for the New England and Mid-Atlantic regions. The Council's Groundfish Committee will provide recommendations and the Council is expected to take final action on Framework Adjustment 47 to the Northeast Multispecies FMP. It also will consider recommendations for recreational accountability measures for Gulf of Maine haddock. Before meeting adjournment for the day, there will be an update on the development of Amendment 19 to Northeast Multispecies FMP, to address the small mesh fishery which includes stocks of red hake, silver hake, and offshore hake.

Thursday, November 17, 2011

The Council will consider approval of recommendations for goals and objectives for Amendment 6 to the Monkfish FMP, an action that may include catch shares management approaches for the monkfish fishery. The Council also will discuss a motion postponed from its last meeting requesting that NMFS calculate individual contribution factors (allocation shares or sector contribution) for three historical fishing periods and forward that information to permit holders. Members will also vote to set the spiny dogfish annual catch limit for 2012 at 44.868 million pounds, the annual catch target at 44.737 million pounds, the total allowable landings at 35.740 million pounds, and the commercial quota at 35.694 million pounds, and to set the trip limit at 4,000 pounds. These specifications already have been approved by the Mid-Atlantic Council. The Enforcement Committee will bring forward its recommendations for changes to gear stowage requirements, a letter supporting vessel and gear marking, and recommendations for hake incidental catch limits and skate identification at the dock. It also will discuss and may comment on the October 5, 2011 advanced notice of proposed rulemaking titled Changes to Vessel Replacement and Upgrade Provisions for Fishing Vessels Issued Limited Access Federal Fishery Permits. Finally, the Council will accommodate a NMFS scoping hearing about issues relevant to the management of sandbar, dusky, and blacknose shark, and on a new status determination for scalloped hammerhead based on recent stock assessments for these species.

Although other non-emergency issues not contained in this agenda may come before this Council for discussion, those issues may not be the subjects of formal action during this meeting. Council action will be restricted to those issues specifically listed in this notice and any issues arising after publication of this notice that require emergency action under section 305(c) of the Magnuson-Stevens Act, provided that the public has been notified of the Council's intent to take final action to address the emergency.

Special Accommodations

This meeting is physically accessible to people with disabilities. Requests for sign language interpretation or other auxiliary aids should be directed to Paul J. Howard (see **ADDRESSES**) at least 5 days prior to the meeting date.

Dated: October 24, 2011.

Tracey L. Thompson,

Acting Director, Office of Sustainable Fisheries, National Marine Fisheries Service.

[FR Doc. 2011–27768 Filed 10–26–11; 8:45 am]

BILLING CODE 3510–22–P

DEPARTMENT OF DEFENSE

Office of the Secretary

[Docket ID: DOD–2011–OS–0115]

Privacy Act of 1974; System of Records

AGENCY: Office of the Secretary, Department of Defense (DoD).

ACTION: Notice to amend a system of records.

SUMMARY: The Office of the Secretary of Defense is proposing to amend a system of records notice in its existing inventory of records systems subject to the Privacy Act of 1974, (5 U.S.C. 552a), as amended.

DATES: The changes will be effective on November 28, 2011 unless comments are received that would result in a contrary determination.

ADDRESSES: You may submit comments, identified by docket number and title, by any of the following methods:

- *Federal Rulemaking Portal: http://www.regulations.gov.* Follow the instructions for submitting comments.
- *Mail:* Federal Docket Management System Office, 4800 Mark Center Drive, East Tower, 2nd Floor, Suite 02G09, Alexandria, VA 22350–3100.

Instructions: All submissions received must include the agency name and docket number for this **Federal Register** document. The general policy for comments and other submissions from members of the public is to make these submissions available for public viewing on the Internet at *http://www.regulations.gov* as they are received without change, including any personal identifiers or contact information.

FOR FURTHER INFORMATION CONTACT: Ms. Cindy Allard, Chief, OSD/JS Privacy Office, Freedom of Information Directorate, Washington Headquarters Services, 1155 Defense Pentagon, Washington, DC 20301–1155, or by phone at (571) 372–0461.

SUPPLEMENTARY INFORMATION: The Office of the Secretary of Defense notices for systems of records subject to the Privacy Act of 1974, (5 U.S.C. 552a), as amended, have been published in the **Federal Register** and are available from the address in **FOR FURTHER INFORMATION CONTACT**. The specific changes to the

records systems being amended are set forth below followed by the notices, as amended, published in their entirety. The proposed amendments are not within the purview of subsection (r) of the Privacy Act of 1974, (5 U.S.C. 552a), as amended, which requires the submission of a new or altered system report.

Dated: October 21, 2011.

Aaron Siegel,

Alternate OSD Federal Register Liaison Officer, Department of Defense.

DWHS P04

SYSTEM NAME:

Reduction-In-Force Case Files (February 11, 2011, 76 FR 7825).

CHANGES:

* * * * *

SYSTEM LOCATION:

Delete entry and replace with ''Human Resources Directorate, Personnel Services Division, 4800 Mark Center Drive, Suite 03D08, Alexandria, VA 20350–3200.''

* * * * *

SYSTEM MANAGER(S) AND ADDRESS:

Delete entry and replace with ''Chief of Staffing Division, Human Resources Directorate, Personnel Services Division, 4800 Mark Center Drive, Suite 03D08, Alexandria, VA 20350–3200.''

* * * * *

DWHS P04

SYSTEM NAME:

Reduction-In-Force Case Files.

SYSTEM LOCATION:

Human Resources Directorate, Personnel Services Division, 4800 Mark Center Drive, Suite 03D08, Alexandria, VA 20350–3200.

CATEGORIES OF INDIVIDUALS COVERED BY THE SYSTEM

Civilian employees serviced by the Washington Headquarters Service, Human Resource Office who have been notified of reduction-in-force action.

CATEGORIES OF RECORDS IN THE SYSTEM:

Name, home/mailing address, service computation date, veterans preference for Reduction in Force (RIF), performance appraisal ratings, tenure, and subgroup. Documents in the files may include letters from management officials, letters prepared by personnel to the individual regarding type of action required, correspondence from individual concerned and other miscellaneous correspondence concerning the specific action.

AUTHORITY FOR MAINTENANCE OF THE SYSTEM:

5 U.S.C. 7103, Definitions, application; 10 U.S.C. 1597, Civilian positions: guidelines for reductions; 5 CFR part 351, Chapter 1–Office of Personnel Management, Reductions in Force; and DoD 1400.25–M, chapter 1701, Department of Defense Civilian Personnel Manual.

PURPOSE(S):

To document the communication of the reduction-in-force process and communicate with affected employees.

ROUTINE USES OF RECORDS MAINTAINED IN THE SYSTEM, INCLUDING CATEGORIES OF USERS AND THE PURPOSES OF SUCH USES:

In addition to those disclosures generally permitted under 5 U.S.C. 552a(b) of the Privacy Act of 1974, these records may specifically be disclosed outside the DoD as a routine use pursuant to 5 U.S.C. 552a(b)(3) as follows:

To the Office of Personnel Management in instances where an affected employee appeals the decision.

The DoD 'Blanket Routine Uses' set forth at the beginning of the Office of the Secretary of Defense (OSD) compilation of systems of records notices apply to this system.

POLICIES AND PRACTICES FOR STORING, RETRIEVING, ACCESSING, RETAINING, AND DISPOSING OF RECORDS IN THE SYSTEM:

STORAGE:

Paper file folders.

RETRIEVABILITY:

Filed alphabetically by last name.

SAFEGUARDS:

Records are maintained in locked file cabinets in a secure area in a building with 24-hour security. Access to records is only by authorized Reduction in Force (RIF) team personnel.

RETENTION AND DISPOSAL:

Records are destroyed two years after case is closed.

SYSTEM MANAGER(S) AND ADDRESS:

Chief of Staffing Division, Human Resources Directorate, Personnel Services Division, 4800 Mark Center Drive, Suite 03D08, Alexandria, VA 20350–3200.

NOTIFICATION PROCEDURE:

Individuals seeking to determine whether information about themselves is contained in this system should address written inquiries to the Chief of Staffing Division, Personnel Services, Human Resources Directorate, Washington Headquarters Service, 1155 Defense Pentagon, Washington, DC 20301–1155.

RECORD ACCESS PROCEDURES:

Individuals seeking access to information about themselves contained in this system should address written inquiries to the OSD/Joint Staff, Freedom of Information Act Requester Service Center, Office of Freedom of Information, 1155 Defense Pentagon, Washington, DC 20301–1155.

Requests must include the name and number of this System of Records Notice, the name of the individual, approximate date of reduction in force and be signed.

CONTESTING RECORD PROCEDURES:

The OSD rules for accessing records, for contesting contents and appealing initial agency determinations are published in OSD Administrative Instruction 81; 32 CFR part 311; or may be obtained from the system manager.

RECORD SOURCE CATEGORIES:

The individual, the Official Personnel File (OPF), and correspondence from appeal examiner in appealed cases.

EXEMPTIONS CLAIMED FOR THE SYSTEM:

None.

[FR Doc. 2011–27729 Filed 10–26–11; 8:45 am]

BILLING CODE 5001–06–P

DEPARTMENT OF DEFENSE

Office of the Secretary

[Docket ID: DOD–2011–OS–0116]

Privacy Act of 1974; System of Records

AGENCY: Office of the Secretary, Department of Defense (DoD).

ACTION: Notice to amend a system of records.

SUMMARY: The Office of the Secretary of Defense is proposing to amend a system of records notice in its existing inventory of records systems subject to the Privacy Act of 1974, (5 U.S.C. 552a), as amended.

DATES: The changes will be effective on November 28, 2011 unless comments are received that would result in a contrary determination.

ADDRESSES: You may submit comments, identified by docket number and title, by any of the following methods:

- *Federal Rulemaking Portal: http://www.regulations.gov.* Follow the instructions for submitting comments.
- *Mail:* Federal Docket Management System Office, 4800 Mark Center Drive, East Tower, 2nd Floor, Suite 02G09, Alexandria, VA 22350–3100.

Instructions: All submissions received must include the agency name and

docket number for this **Federal Register** document. The general policy for comments and other submissions from members of the public is to make these submissions available for public viewing on the Internet at *http://www.regulations.gov* as they are received without change, including any personal identifiers or contact information.

FOR FURTHER INFORMATION CONTACT: Ms. Cindy Allard, Chief, OSD/JS Privacy Office, Freedom of Information Directorate, Washington Headquarters Services, 1155 Defense Pentagon, Washington, DC 20301–1155, or by phone at (571) 372–0461.

SUPPLEMENTARY INFORMATION: The Office of the Secretary of Defense notices for systems of records subject to the Privacy Act of 1974, (5 U.S.C. 552a), as amended, have been published in the **Federal Register** and are available from the address in **FOR FURTHER INFORMATION CONTACT**.

The specific changes to the records systems being amended are set forth below followed by the notices, as amended, published in their entirety. The proposed amendments are not within the purview of subsection (r) of the Privacy Act of 1974, (5 U.S.C. 552a), as amended, which requires the submission of a new or altered system report.

Dated: October 21, 2011.

Aaron Siegel,

Alternate OSD Federal Register Liaison Officer, Department of Defense.

DWHS P37

SYSTEM NAME:

Grievance and Unfair Labor Practices Records (December 8, 2010, 75 FR 76430).

CHANGES:

* * * * *

SYSTEM LOCATION:

Delete entry and replace with ''Labor and Management Employee Relations Division, Human Resources Directorate, Washington Headquarters Services, 4800 Mark Center Drive, Suite 03D08, Alexandria, VA 22350–3200.''

* * * * *

SYSTEM MANAGER(S) AND ADDRESS:

Delete entry and replace with ''Assistant Director, Labor and Management Employee Relations Division, Human Resources Directorate, Washington Headquarters Services, 4800 Mark Center Drive, Suite 03D08, Alexandria, VA 22350–3200.''

* * * * *

DWHS P37

SYSTEM NAME:

Grievance and Unfair Labor Practices Records.

SYSTEM LOCATION:

Labor and Management Employee Relations Division, Human Resources Directorate, Washington Headquarters Services, 4800 Mark Center Drive, Suite 03D08, Alexandria, VA 22350–3200.

CATEGORIES OF INDIVIDUALS COVERED BY THE SYSTEM:

Employees of the Office of the Secretary of Defense, Joint Staff, Washington Headquarters Services, and Department of Defense (DoD) Agencies and Field Activities serviced by Washington Headquarters Services Human Resources Directorate who have submitted grievances covered by a negotiated grievance procedure or unfair labor practice charges.

CATEGORIES OF RECORDS IN THE SYSTEM:

Case file contains individuals name, case number, subject of grievance, background papers, and details pertaining to the case or issue. Case files may also contain the following information that is not solicited from individuals: work and/or home addresses and telephone numbers and Social Security Numbers (SSN).

AUTHORITY FOR MAINTENANCE OF THE SYSTEM:

5 U.S.C. 7121, Grievance Procedures; DoD 1400.25–M (Subchapter 771), DoD Civilian Personnel Manual (Administrative Grievance System); Washington Headquarters Services Administrative Instruction 37, Employee Grievances, and E.O. 9397 (SSN), as amended.

PURPOSE(S):

Records are used in the administration, processing, and resolution of unfair labor complaints, grievance arbitrations, negotiability, and representation issues. De-identified statistical data may be used by management for reporting and policy evaluation purposes.

ROUTINE USES OF RECORDS MAINTAINED IN THE SYSTEM, INCLUDING CATEGORIES OF USERS AND THE PURPOSES OF SUCH USES:

In addition to those disclosures generally permitted under 5 U.S.C. 552a(b) of the Privacy Act of 1974, these records may specifically be disclosed outside the DoD as a routine use pursuant to 5 U.S.C. 552a(b)(3) as follows:

To officials of labor organizations reorganized under the Civil Service Reform Act when relevant and necessary to the performance of their exclusive representation duties concerning personnel policies, practices, and matters affecting working conditions.

To representatives of the U.S. Office of Personnel Management (OPM) on matters relating to the inspection, survey, audit, or evaluation of civilian personnel management programs.

To the Comptroller General, or any of his authorized representatives, in the course of the performance of duties of the Government Accountability Office relating to the Labor-Management Relations Program.

To arbitrators, examiners, or other third parties appointed to inquire into or adjudicate labor-management issues.

The Blanket Routine Uses set forth at the beginning of the Office of the Secretary of Defense compilation of systems of notices also apply to this system of records.

POLICIES AND PRACTICES FOR STORING, RETRIEVING, ACCESSING, RETAINING, AND DISPOSING OF RECORDS IN THE SYSTEM:

STORAGE:

Paper file folders and electronic storage media.

RETRIEVABILITY:

Names of individuals initiating grievance procedures, case number, and by subject matter.

SAFEGUARDS:

Records are maintained in areas only accessible to Labor Management Employee Relations personnel who must access the records to perform their official duties. The electronic records require a Common Access Card and can only be accessed by Labor Management Employee Relations personnel. Paper records are stored in locked file cabinets in secured offices and buildings that are locked and guarded during non-duty hours.

RETENTION AND DISPOSAL:

Grievance files are disposed of four years after the case is closed.

SYSTEM MANAGER(S) AND ADDRESS:

Assistant Director, Labor and Management Employee Relations Division, Human Resources Directorate, Washington Headquarters Services, 4800 Mark Center Drive, Suite 03D08, Alexandria, VA 22350–3200.

NOTIFICATION PROCEDURE:

Individuals seeking to determine whether information about themselves is contained in this system should address written inquiries to the Assistant Director for Labor and Management Employee Relations,

Human Resources Directorate, Washington Headquarters Services, Department of Defense, 1155 Defense Pentagon, Washington, DC 20301–1155.

RECORD ACCESS PROCEDURES:

Individuals seeking access to information about themselves contained in this system should address written inquiries to the Office of the Secretary of Defense/Joint Staff Freedom of Information Act Requester Service Center, Office of Freedom of Information, 1155 Defense Pentagon, Washington, DC 20301–1155.

Requests should include the name and number of this system of records notice the type of issue (*e.g.,* administrative grievance) and the case subject or case number and be signed and dated.

CONTESTING RECORD PROCEDURES:

The Office of the Secretary of Defense rules for accessing records, for contesting contents and appealing initial agency determinations are published in Office of the Secretary of Defense Administrative Instruction 81, 32 CFR part 311, or may be obtained from the system manager.

RECORD SOURCE CATEGORIES:

The individual, management officials involved with the incident leading to or adjudication of grievance or unfair labor practice charges, Washington Headquarters Service Labor Management Employee Relations personnel, arbitrators office, the Federal Labor Relations Authority Headquarters and Regional Offices, and union officials.

EXEMPTIONS CLAIMED FOR THE SYSTEM:

None.

[FR Doc. 2011–27736 Filed 10–26–11; 8:45 am]

BILLING CODE 5001–06–P

DEPARTMENT OF DEFENSE

Office of the Secretary

[Docket ID: DOD–2011–OS–0117]

Privacy Act of 1974; System of Records

AGENCY: Office of the Secretary, Department of Defense (DoD).

ACTION: Notice to delete a system of records.

SUMMARY: The Office of the Secretary of Defense is deleting a systems of record notice from its existing inventory of record systems subject to the Privacy Act of 1974, (5 U.S.C. 552a), as amended.

DATES: This proposed action will be effective without further notice on November 28, 2011 unless comments are received which result in a contrary determination.

ADDRESSES: You may submit comments, identified by docket number and title, by any of the following methods:

• *Federal Rulemaking Portal: http://www.regulations.gov.*

Follow the instructions for submitting comments.

• *Mail:* Federal Docket Management System Office, 4800 Mark Center Drive, East Tower, 2nd Floor, Suite 02G09, Alexandria, VA 22350–3100.

Instructions: All submissions received must include the agency name and docket number for this **Federal Register** document. The general policy for comments and other submissions from members of the public is to make these submissions available for public viewing on the Internet at *http://www.regulations.gov* as they are received without change, including any personal identifiers or contact information.

FOR FURTHER INFORMATION CONTACT: Mrs. Cindy Allard, Privacy Act Officer, Office of Freedom of Information, Washington Headquarters Services, 1155 Defense Pentagon, Washington, DC 20301–1155, or by phone at (571) 372–0461.

SUPPLEMENTARY INFORMATION: The Office of the Secretary of Defense systems of records notices subject to the Privacy Act of 1974, (5 U.S.C. 552a), as amended, have been published in the **Federal Register** and are available from the address in **FOR FURTHER INFORMATION CONTACT**.

The Office of the Secretary of Defense proposes to delete one system of records notice from its inventory of record systems subject to the Privacy Act of 1974 (5 U.S.C. 552a), as amended. The proposed deletion is not within the purview of subsection (r) of the Privacy Act of 1974, (5 U.S.C. 552a), as amended, which requires the submission of a new or altered system report.

Dated: October 21, 2011.

Aaron Siegel,

Alternate OSD Federal Register Liaison Officer, Department of Defense.

DELETION:

DPR 29

Language and Skills Participation Program (August 5, 2003, 68 FR 46167).

REASON:

Based on a recent review of DPR 29, Language and Skills Participation Program, it has been determined that DPR 29 is duplicative of DHRA 07, National Language Service Corps Pilot Records (September 11, 2008, 73 FR 52839), and can therefore be deleted.

[FR Doc. 2011–27737 Filed 10–26–11; 8:45 am]

BILLING CODE 5001–06–P

DEPARTMENT OF EDUCATION

Postsecondary Educational Institutions Invited To Participate in Experiments Under the Experimental Sites Initiative

AGENCY: Office of Postsecondary Education, Department of Education.

ACTION: Notice.

Overview Information: Federal Student Financial Assistance Programs under Title IV of the Higher Education Act of 1965, as amended; notice inviting postsecondary educational institutions to participate in experiments under the Experimental Sites Initiative.

SUMMARY: The Secretary invites postsecondary educational institutions (institutions) that participate in the student assistance programs authorized under Title IV of the Higher Education Act of 1965, as amended (the HEA), to apply to participate in one or more new experiments under the Experimental Sites Initiative (ESI), as authorized by section 487A(b) of the HEA. Under section 487A(b) the Secretary has the authority to grant waivers from specific Title IV, HEA statutory or regulatory requirements to allow institutions to test alternative methods for administering the Title IV, HEA programs.

DATES: Applications to participate in any experiment must be received by the Department no later than December 12, 2011 in order for an institution to receive priority to be considered for participation in an experiment. Letters of application received after December 12, 2011 may be considered for participation at a later time.

ADDRESSES: Letters of application must be submitted via electronic mail to the following email address: *experimentalsites@ed.gov*. For formats and other required information, see ''Instructions for Submitting Letters of Application'' under **SUPPLEMENTARY INFORMATION**, below.

FOR FURTHER INFORMATION CONTACT: Warren Farr, U.S. Department of Education, Federal Student Aid, 830 First Street, NE., Washington, DC 20002. Telephone: (202) 377–4380 or by email at: *Warren.Farr@ed.gov*.

If you use a telecommunications device for the deaf (TDD), call the Federal Relay Service (FRS), toll free, at 1–800–877–8339.

SUPPLEMENTARY INFORMATION:

Instructions for Submitting Letters of Application:

Letters of application should take the form of a .PDF attachment to an email message sent to the email address provided in the **ADDRESSES** section of this notice. The subject line of the email should read ''ESI—Request to Participate.'' The text of the email should identify the experiment, or experiments, the institution wishes to participate in by number and title used in the ''The Experiments'' paragraph under **SUPPLEMENTARY INFORMATION**, below (*e.g.,* ''Experiment 5—Direct Loan Program—Unequal disbursements'').

The letter of application should be on institutional letterhead and be signed by an official of the institution. The letter must include the institution's official name and Department of Education Office of Postsecondary Education Identification (OPEID), as well as a mailing address, email address, FAX number, and telephone number of a contact person at the institution.

Background:

This notice is the second notice regarding the Experimental Sites Initiative (ESI). The first, published in the **Federal Register** on October 28, 2009 (74 FR 55542), solicited suggestions from institutions for new experiments under the ESI. The Department received suggestions for new experiments from institutions representing all sectors of the postsecondary education community. This notice invites institutions to request to participate in one or more of the experiments described in this notice.

Under the waiver authority granted the Secretary under section 487A(b) of the HEA, each experiment will be designed to test whether proposed changes to current requirements improve the administration of the Title IV programs. Substantiated improvements as a result of an experiment would provide a rationale for policymakers to consider changing the statutory or regulatory provision that was the focus of the experiment.

The Department is interested in gathering data under circumstances that will allow for a reliable evaluation of the experiments. Participating institutions will be expected to gather and report data needed by the Department for this purpose. To support recommendations for change, evidence must be provided that was obtained from both a treatment group of students who participated in the experiment and a control or comparison group of students who received their student aid under existing rules. As for any evaluation design, it is important that the control or comparison group be as similar as possible to the treatment group.

Depending upon the experiment, the control group could be a set of students who otherwise meet the eligibility requirements for the experiment but are randomly selected to have their aid administered under existing requirements. Comparison groups could include students from, for example, a different but similar educational program, a different but similar location or campus, an earlier award year, or a group that does not have the same need for the treatment (*e.g.,* they are not Pell Grant eligible); but in all cases these groups should be made up of students as similar as possible to those in the treatment group.

The Secretary intends to support experiments where the Department can draw causal inferences about the effects of the alternative approach based on a rigorous evaluation design. Examples of the kinds of evaluation and research designs that allow conclusions to be drawn about the effects of an intervention (program, policy, or practice) can be found at ED's What Works Clearinghouse *(http://ies.ed.gov/ncee/wwc/)*.

Institutions may apply to participate in one or more of the eight experiments included in this notice and described below. From the institutions that apply, the Secretary will select only a limited number to participate in each experiment. The selection of participating institutions will be guided by the purpose of the ESI, which is, as is provided for under section 487A(b), to evaluate alternatives to current requirements, and inform policymakers about the possibility of changes to those requirements. The ESI is not designed to provide broad regulatory relief or general exceptions to the statutory and regulatory requirements. Consequently, the Secretary will consider the extent to which eligible institutions are willing to conduct the experiment in a way that maximizes the Department's ability to make reliable evaluations of the experiments.

The Secretary intends to select a cross-section of Title IV eligible institutions, carefully considering the diversity of participating institutions by, among other characteristics, institutional type and control, geographic location, enrollment size, and Title IV participation levels.

Institutions selected to participate in the experiments must have a strong track record in the administration of the Title IV student assistance programs. When selecting institutions, the Secretary will consider all information available about an institution including, but not limited to, evidence of programmatic compliance, cohort default rates, financial responsibility ratios, and, for for-profit institutions, ''90/10'' results.

Specifically, any institution with a last official cohort default rate of 25 percent or more (the statutory default rate threshold for possible loss of Title IV student loan eligibility) will not be eligible to participate in the ESI. Nor will any for-profit institution where 85 percent or more of its revenues come from Title IV aid (the historical percentage that applied to for-profit institutions), as computed under the requirements for the 90/10 rule. Due to the proximity of these rates to the thresholds that would place the institution in jeopardy of losing Title IV program eligibility, the Secretary believes that including institutions with high cohort default rates or high 90/10 ratios creates a risk to program integrity.

Finally, institutions with recent cohort default rates and, as appropriate, 90/10 ratios that show a trajectory toward the 25 percent default rate or the 85 percent Title IV revenue thresholds will also be ineligible to participate in the experiments.

In the event that a selected institution consists of more than one location (*e.g.,* campus), the Secretary anticipates limiting experiments to a single location, unless the institution proposes to implement the experiment differently at other locations to test multiple alternatives to the statutory or regulatory requirement, or if the institution provides the Secretary with another compelling justification.

Through the ESI, the Department seeks to partner with institutions in experiments that will test the effectiveness of alternatives to selected statutory or regulatory requirements applicable to the Title IV, HEA programs. In general, effectiveness will be determined by the Department's analysis of empirical evidence submitted by participating institutions. A successful experiment would be one that results in improved services to students or reduces burden on students and institutions, or both, and supports the statutory or regulatory intent of the original requirement and maintains (or increases) the financial and programmatic integrity of the Title IV, HEA programs. Each of the experiments must provide documented results that can inform future policy decisions.

For each experiment, we expect to measure—to the greatest extent possible—the effect of the alternative approach on the students whose Title IV

aid was administered under the experiment. Evaluations will be designed to measure the likely outcome in the absence of the experiment. Thus, participating institutions will be required to report information for students in the experiment and information, as available, for otherwise similar students whose Title IV eligibility was administered under existing requirements. The specific reporting requirements will vary among the experiments and will be finalized in consultation with the institutions selected to participate in each experiment.

In addition to submitting evaluation data specified for each experiment, institutions that are selected for participation in an experiment will be required to submit a narrative description of their implementation of the experiment. The narrative should include any unforeseen challenges and unexpected benefits.

Institutions selected for participation in an experiment will have their Program Participation Agreement (PPA) with the Secretary amended to reflect the specific statutory or regulatory provisions that the Secretary has waived or modified. Revised PPAs will also document the agreement between the Secretary and the institution about how each experiment will be conducted and will specify the evaluation and reporting requirements for each experiment.

To assist institutions considering whether to submit a request to participate in an experiment, the Department provides, in the descriptions of each experiment below, its initial thoughts on the evaluation measures and corresponding data that will be collected from institutions participating in each experiment. Institutions that are selected to participate in an experiment will be required to submit data and other information specified by the Secretary as a condition of the institution's initial and continued participation in the experiment. The Secretary reserves the right to modify these initial evaluation measures and reporting requirements for any experiment to support a rigorous evaluation of the experiment.

The Experiments:

Experiment 1—Federal Pell Grant Program—Eligibility of students with bachelor's degrees who enroll in vocational or career programs.

Experiment 2—Federal Pell Grant Program—Eligibility of students enrolled in certain short-term training programs.

Experiment 3—Direct Loan Program—Single disbursement of a one-term loan for study abroad students.

Experiment 4—Direct Loan Program—Early disbursement for study abroad students and for students enrolled in foreign institutions.

Experiment 5—Direct Loan Program—Unequal disbursements.

Experiment 6—Direct Loan Program—Limiting unsubsidized loan amounts.

Experiment 7—PLUS Loans for parents of students with intellectual disabilities.

Experiment 8—Student Eligibility—Eligibility of students with intellectual disabilities who are also enrolled in high school.

Details on the ESI Experiments:

Experiment 1—Federal Pell Grant Program—Eligibility of students with bachelor's degrees who enroll in vocational or career programs.

Background: In general, section 401(c)(1) of the HEA provides that students who have earned a bachelor's degree are not eligible for a Federal Pell Grant. This restriction may prevent low-income students who have earned a bachelor's degree from benefiting from short-term vocational training when they are either unemployed or underemployed, notwithstanding their having earned a bachelor's degree. This experiment would test whether a limited exception to the provision that only students without a bachelor's degree can receive a Pell Grant would help address the unemployment or underemployment status of such persons.

Description: This experiment would provide a limited waiver of the statutory requirement that a student who has earned a bachelor's degree may not receive a Pell Grant. The experiment would allow at least some students with a bachelor's degree to receive not more than one full scheduled Pell Grant award, over no more than two award years, for enrollment in a vocational/career program of study of one year or less.

Eligibility would be restricted to students with a bachelor's degree who have demonstrated to the participating institution that they are unemployed or underemployed and who will be entering the vocational program for the first time.

The experiment will require that the program be one that provides training needed to meet local or regional workforce needs, as determined by the institution in consultation with employers or state or local workforce agencies.

As a condition of receiving a Pell Grant under this experiment, students must agree to provide career and employment information to the institution for both the period prior to enrolling in the program and receiving Pell Grant funding and for up to two years following completion or withdrawal from the program. As an option, the institution may provide information it obtains from an alternative reliable source such as a state longitudinal data system.

The Department is particularly interested in applications from institutions that will include in this experiment students who are legal immigrants to the United States, who were trained as professionals abroad, and who are seeking credentials allowing them to fill skilled positions in the United States.

The objective of the experiment is to determine if providing Pell Grants to low-income students who have earned a bachelor's degree but who are unemployed or underemployed improves the students' employment status. The experiment should also minimize the use of student loan funds to finance vocational/career education for such students.

Waivers: Institutions selected for this experiment will be exempt from the following statutory and regulatory provisions:

- HEA section 401(c)(1), which excludes students who have earned a bachelor's degree from receiving Pell Grant funding.
- 34 CFR 668.32(c)(2)(i)(A), which excludes baccalaureate or first professional degree holders from receiving a Pell Grant.
- 34 CFR 690.6(a), which limits eligibility for Pell Grants to students who have not earned their first bachelor's degree.

All other provisions of the Student Assistance General Provisions regulations and the Federal Pell Grant regulations will remain in effect, including 34 CFR 690.6(e), which provides that a student may not receive more than nine Pell Grant Scheduled Awards.

Evaluation: This experiment will be evaluated by using information provided by the institution, and any other information available to the Secretary, to determine if the students who received Pell Grant funding under the experiment completed the program and became employed in the field for which the training was provided. Evaluation measures will include employment and salary data for the students before they entered the program and after completing or withdrawing from the program. The

Department will also analyze whether these students completed their vocational training with a lower student loan debt than if they had not received a Pell Grant.

As noted earlier, to support a recommendation for a change to a legal requirement, data from both a treatment group of students who participated in the experiment and a control or comparison group of students who received their student aid under existing rules must be evaluated. This could require that some students who otherwise meet the eligibility requirements for this experiment would have their aid administered under existing requirements.

The Department will collect and analyze data to evaluate completion rates, loan debt, and post-training employment.

Reporting Requirements: Institutions participating in this experiment will be required to report information on the students participating in the experiment and on at least the following: (1) Students enrolled in the program who do not have a bachelor's degree and (2) students with bachelor's degrees who were enrolled in the program during one or more years prior to the first year of the experiment.

The information that will be reported for each of the groups of students will likely include the number of students who began the program, the amount of grant and loan assistance received by the students, the number of students who withdrew from the program, the number of students who completed the program, grade point averages and other academic performance information for the students, the number of students who obtained employment in jobs related to the vocational training, and salary information before and after program completion or withdrawal.

Experiment 2—Federal Pell Grant Program—Eligibility of students enrolled in certain short-term training programs.

Background: In general, section 481(b)(A) of the HEA provides that only academic programs that are at least 15 weeks in duration and that provide 600 clock hours, 16 semester or trimester hours, or 24 quarter hours of academic credit are eligible programs for purposes of the Federal Pell Grant Program (unless the program requires at least an associate's degree for admission).

Representatives from some state institutions that offer short-term vocational programs have suggested that if the training is directly related to state or local workforce needs, allowing shorter term vocational training programs to be Pell Grant eligible would enable unemployed and underemployed persons to obtain the short-term training required for employment by local or regional employers. While some institutions have developed innovative programs to embed a short-term program within a longer eligible degree or certificate program, such programs may not meet the needs of all potential students. This is especially true for students from low income backgrounds or those who have work or family responsibilities that prevent them from enrolling in longer term programs. In addition, it is hoped that, under this experiment, institutions that currently offer longer term programs may develop ways that shorten the student's time to completion—such as asynchronous learning, competency based instruction, or other innovative approaches. Such changes to the structure of training programs may allow the program to be shorter than 15 weeks and still maintain Pell Grant eligibility.

Description: This experiment would provide a waiver of the requirement that a Pell Grant eligible program must include at least 15 weeks of instructional time and at least 600 clock hours, 16 semester or trimester hours, or 24 quarter hours. It would allow Pell Grants to be received by at least some otherwise eligible students who are enrolled in a vocational program of at least eight weeks in length and that, at a minimum, includes at least 150 clock hours of instructional time, which is what some short-term vocational programs currently provide. The amount of the Pell Grant provided to a student under this experiment will be prorated for the shorter period of instructional time, pursuant to the Pell Grant regulations at 34 CFR 690.63(a)(3).

The experiment will require that the short-term vocational program at the community college or postsecondary vocational institution must provide training needed to meet local or regional workforce needs, as determined by the institution in consultation with employers or state or local workforce agencies. As part of that consultation, the institution must ensure that the content and instructional hours of the program are (1) sufficient to meet hiring requirements of multiple likely employers, and (2) sufficient to allow the students to apply for any licenses or other certifications that may be required to be employed in the field for which the training was offered.

As a condition of receiving Pell Grant funds under this experiment, students must agree to provide career and employment information to the institution for the period prior to enrolling in the program and for up to two years following completion or withdrawal from the program. As an option, the institution may provide information it obtains from an alternative reliable source such as a state longitudinal data system.

The objective of this experiment is to determine if providing Pell Grant funding to support unemployed or underemployed persons enrolled in short-term vocational training programs offered by community colleges and postsecondary vocational institutions increases employment rates or wages of those persons.

Waivers: Institutions selected for this experiment will be exempt from the following statutory and regulatory provisions:

- HEA section 481(b)(1)(A), which sets the minimum timeframes for a Pell Grant eligible program.
- 34 CFR 668.8(d)(1)(i) and (ii), which establish the timeframes for eligible programs.

All other provisions of the Student Assistance General Provisions regulations and the Federal Pell Grant regulations will remain in effect.

Evaluation: This experiment will be evaluated by using information provided by the institution, and any other information available to the Secretary, to determine whether providing Pell Grant funding for low-income students enrolled in short-term vocational programs results in expanded and improved job placement for those students. The evaluation will examine the employment status and, if possible, the earnings of students participating in the program and their program completion rates. It will also measure employment outcomes of students who were enrolled in vocational programs that include at least 15 weeks of instructional time and at least 600 clock hours.

As noted earlier, to support a recommendation for a change to a legal requirement, data from both a treatment group of students who participated in the experiment and a control or comparison group of students who received their student aid under existing rules must be evaluated. The Department is interested in gathering data under circumstances that will allow for a reliable measurement of the impact of the experiment. Because it is important that the outcomes for the treatment group be compared to a group of students as similar to them as possible, some students who otherwise meet the eligibility requirements for this experiment may need to have their aid administered under existing requirements.

Reporting Requirements: Institutions participating in this experiment will be required to report information about the low-income students enrolled in the short-term programs who receive Pell Grants under this experiment and about non-Pell—eligible students enrolled in the same (or similar) vocational program(s), and of students, if any, who were enrolled in the program prior to the effective date of this experiment. The data institutions participating in this experiment must report will likely include: Enrollment counts; student employment and income data, including participation, if any, in government assistance programs; amounts of grant assistance received; program completion data; information on the placement of students in applicable jobs, including the number of different employers hiring graduates of the program over the two years following the students' completion of the program; and salary information of the students both before and after program completion or withdrawal.

Experiment 3—Direct Loan Program—Single disbursement of a one—term loan for study abroad students.

Background: Section 428G(a) of the HEA provides that with two exceptions, Direct Loan Program loans must be disbursed at least twice during the loan period and those disbursements must be substantially equal. One of the exceptions allows for a single disbursement for an institution's study abroad students if the institution's most recent official Direct Loan/FFEL Program cohort default rate is less than five percent. This exception allows students participating in a study abroad program sponsored by a domestic institution to have money to help offset their initial financial commitments, such as transportation expenses, housing costs, visa fees, fees for immunizations, etc. Additionally, many countries require, as the United States requires, that students planning to attend postsecondary institutions provide documentation of sufficient financial resources to cover their expenses while in the country.

With the nationwide increase in default rates, many institutions (mostly public and non-profit four-year institutions) fall just short of the five percent cohort default rate threshold that would allow for a single disbursement of a one-term Direct Loan to their study abroad students. With the upcoming transition to three-year cohort default rate calculations, it is expected that even fewer institutions will meet the less-than-five-percent threshold.

Description: This experiment would provide a partial waiver to the requirement that Direct Loan Program loans be disbursed in at least two substantially equal disbursements during a loan period. It would allow a single disbursement of a one-term loan for some study abroad students attending a participating institution even if the institution's cohort default rate equals or exceeds five percent.

The objective of this experiment is to determine if providing needed early loan funding for students studying outside of the United States increases participation in foreign educational experiences for students without increasing the risk that the students will not complete the loan period for which the funds were provided.

Waivers: Institutions selected for this experiment will be exempt from the following statutory and regulatory provisions:

- HEA section 428G(a), which generally requires multiple disbursements of student loans.
- 34 CFR 685.301(b)(3)(ii), which requires at least two disbursements of Direct Loan Program loan proceeds.

Instead, participating institutions will be permitted to make one disbursement of a Direct Loan Program loan for study abroad students if the loan period is one academic term. All other provisions of the Student Assistance General Provisions regulations and the Direct Loan Program regulations will remain in effect.

Evaluation: The Department will evaluate this experiment by using information provided by the institution, and any other information available to the Secretary, to determine whether the experiment allowed more students, especially low-income students, to participate in study abroad programs. It will also evaluate whether students assisted by the experiment completed the loan period for which they received Direct Loan funding in a single disbursement.

As noted earlier, to support a recommendation for a change to a legal requirement, data must be provided from both a treatment group of students who participated in the experiment and a control or comparison group of students who received their student aid under existing rules. Because it is important that outcomes for the treatment group be compared to a group of students as similar to the treatment group as possible, some students who otherwise meet the eligibility requirements for this experiment may need to have their aid administered under existing requirements.

Reporting Requirements: Institutions participating in this experiment will be required to provide information on study abroad students who received their loan proceeds in one disbursement under this experiment as well as for study abroad students who received their loan funds for an earlier payment period when at least two disbursements were made. The information to be collected for these groups will likely include the number of students in each group, the amount of grant and loan assistance received, and the number of students enrolled at the end of the loan period.

Experiment 4—Direct Loan Program—Early disbursement for students participating in approved study abroad programs and students enrolled in foreign institutions.

Background: Under the FFEL Program regulations at 34 CFR 682.207(b)(1)(v), a student who was participating in an approved study abroad program or who was attending an eligible foreign institution could, upon request of the institution and the approval of the FFEL Program guaranty agency, have FFEL Program loan proceeds disbursed as early as 30 days prior to the first day of classes of the academic term (*i.e.* payment period). This is an exception to the Title IV Student Assistance General Provisions regulations that generally provide that no Title IV student assistance funds can be disbursed to a student earlier than ten days prior to the first day of classes of the academic term.

This FFEL Program exception was provided because of the unique financial needs of students who study outside of the United States. Such students typically need their student aid funds early to meet obligations for travel to the site of their upcoming studies, to get established in the foreign country (housing, etc.), and in some instances to meet the foreign country's visa requirements.

Because prior to July 1, 2010, the only Title IV student assistance a student attending an eligible foreign institution could receive was FFEL Program funds, there was no need to provide a similar exception for the Direct Loan Program. However, with the enactment of the SAFRA within the Health Care and Education Reconciliation Act, students attending foreign institutions (as well as those participating in approved study aboard programs sponsored by U.S. host institutions), must get their Title IV loans through the Direct Loan Program which currently has no provision for early disbursement.

Description: This experiment would permit participating domestic institutions to disburse Direct Loan funds for some students enrolled in approved study abroad programs as

early as 30 days prior to the first day of classes of the student's enrollment for the loan period. Similarly, participating foreign institutions would be able to disburse Direct Loan funds as early as 30 days prior to the first day of classes of the student's enrollment for the loan period.

As a condition of receiving an early disbursement of a Direct Loan under this experiment, students must sign an agreement with the institution allowing for the release of the student's academic records and agreeing to participate in a study to determine the impact of the early disbursement on their foreign study.

The objective of this experiment is to determine if providing early disbursement of Direct Loan proceeds to students whose academic program includes studying in a foreign country increases the number of students who participate in such programs. It will also determine if participating students are academically successful in their programs because of the financial relief the early disbursement provides.

Waivers: Institutions selected for this experiment will be exempt from the following statutory and regulatory provisions:

- HEA section 428G, which provides the earliest date that loan funds may be disbursed.
- 34 CFR 668.164(f), which provides that disbursements of Direct Loan proceeds cannot occur any earlier than ten days prior to the first day of classes for the payment period.

All other provisions of the Student Assistance General Provisions regulations and the Direct Loan Program regulations will remain in effect.

Evaluation: This experiment will be evaluated by using information provided by the institution, and any other information available to the Secretary, to determine if a broader range of students are able to participate in foreign study and be successful. Information collected from students will attempt to determine the effects of the early disbursement. Finally, this experiment will carefully monitor academic withdrawal rates as well as loan delinquencies and defaults for participating students to determine if there are any abnormalities that might be attributed to the early disbursement of loan proceeds.

As noted earlier, to support a recommendation for a change to a legal requirement, data must be provided from both a treatment group of students who participated in the experiment and a control or comparison group of students who received their student aid under existing rules. Because it is important that outcomes for the treatment group be compared to a group of students as similar to the treatment group as possible, some students who otherwise meet the eligibility requirements for this experiment may need to have their aid administered under existing requirements.

Reporting Requirements: Institutions participating in this experiment will be required to report information on the students participating in the experiment and also on other students (including students from prior years) who were enrolled in study abroad programs or at foreign institutions, as appropriate. The data to be collected and analyzed for each group of students will likely include the number of students, confirmation of the students' actual attendance at the foreign institution, and the students' progress toward completion of the foreign study program. Additionally, data will be collected from the students participating in the experiment regarding the impact of the early disbursement on their foreign study experience. And, for students who were not participating in the experiment, data will be collected on the impact on their foreign study experience of not receiving their loan proceeds until, at the earliest, ten days before the first day of classes for the academic term.

Experiment 5—Direct Loan Program—Unequal disbursements.

Background: Section 428G(a)(1) of the HEA provides that a student's Direct Loan must be disbursed in two or more substantially equal amounts. The dates of the disbursements usually coincide with the educational program's academic terms (*i.e.,* payment periods) that make up the loan period. This provision generally works well since the costs for most educational programs are usually reasonably spread out over all of the payment periods that comprise the loan period. However, some educational programs have up-front costs associated with the first payment period of the loan period that are substantially higher than costs for later payment periods. Such up-front costs could include costs of required books and supplies that will be used throughout the loan period, payment required to meet certain insurance or medical requirements, and initial housing costs for students whose housing changes as a result of enrolling in the educational program.

Financial aid administrators have suggested that for some students in certain academic programs, receiving only half of their student loan proceeds at the beginning of the loan period does not allow the student to meet required up-front educational expenses. This can affect whether the students (particularly low-income students) are able to enroll in the program and, once enrolled, be academically successful.

Description: This experiment would waive the requirement that Direct Loans be disbursed in at least two substantially equal disbursements and would allow, under certain conditions, unequal disbursements of Direct Loan proceeds. Institutions participating in this experiment will be required to establish formal policies for determining the conditions under which it would allow a student to receive unequal disbursements of loan funds.

Under this experiment, no student may receive a single disbursement of more than 75 percent of the total loan amount for the loan period, and the same percentage must be applied to all of the student's loans for the loan period (subsidized, unsubsidized, and PLUS loans). This provision is to ensure that there are funds available for later in the loan period. Any funds released in excess of the existing rules cannot be applied to the student's institutional tuition and fee charges, except for any charges directly related to the student obtaining required books and supplies or housing provided by the institution.

Institutions must provide guidance to their Direct Loan borrowers concerning the types of expenses that may qualify them for consideration of unequal loan disbursements and what the acceptable documentation is for each type of expense.

The objective of this experiment is to determine if providing more up-front loan proceeds when the educational expenses are higher at the beginning of the loan period increases the enrollment and program completion of low-income students.

This experiment only applies to Direct Loan proceeds and does not allow for unequal disbursements of Pell Grant funds.

Waivers: Institutions selected for this experiment will be exempt from the following statutory and regulatory provisions:

- HEA section 428G(a)(1), which requires that no Direct Loan disbursement be for more than one-half of the total loan for the loan period.
- 34 CFR 685.301(b)(5), which provides that no installment of a Direct Loan exceed one-half of the loan for the loan period.

All other Direct Loan disbursement requirements will remain in effect.

Evaluation: This experiment will be evaluated by using information provided by the institution, and any

other information available to the Secretary, to determine whether allowing unequal disbursement of Direct Loans increases student enrollment, increases academic performance, and leads to the students' completion of the loan period and academic program.

As noted earlier, to support a recommendation for a change to a legal requirement, data must be provided from both a treatment group of students who participated in the experiment and a control or comparison group of students who received their student aid under existing rules. Because it is important that outcomes for the treatment group be compared to a group of students as similar to the treatment group as possible, some students who otherwise meet the eligibility requirements for this experiment may need to have their aid administered under existing requirements.

Reporting Requirements: Institutions participating in this experiment will be required to report information on the students participating in the experiment and also on students enrolled in the same academic program who received substantially equal disbursements and on students who received equal disbursements for loan periods prior to the experiment. The measures for these groups will likely include the number of students enrolled at the beginning of the loan period, demographic information of the students, the amount of grant and loan assistance awarded to each student, and completion and other academic measures for the students. Institutions must, upon request of the Secretary, submit a description of their policy for determining a student's eligibility for unequal Direct Loan disbursements.

Experiment 6—Direct Loan Program—Limiting unsubsidized loan amounts.

Background: Section 479A(c) of the HEA provides that institutions may only reduce the amount of a student's Direct Loan eligibility on a case-by-case, documented basis. They may not reduce eligibility on any across-the-board programmatic or other categorical basis. Some in the school community believe that this prohibition results in excessive borrowing by some students, especially by students attending low-cost institutions or those who live with their parents (or other family members), or otherwise do not have significant housing expenses. The schools also suggest that providing the statutorily established loan amounts (especially after recent statutory increases) to all students provides incentives for persons to enroll in low cost institutions only to receive a cash disbursement of Federal grant and loan funds in excess of direct institutional charges.

Institutions also argue that the requirement that they provide the full loan amount to all students negatively affects the institution's cohort default rates, thereby placing in jeopardy not only the availability of the Direct Loan Program but also the Pell Grant Program for all of the institution's students. Consequently, some low-cost institutions, mostly community colleges, have chosen not to participate in the loan programs at all, thus depriving otherwise eligible students of access to low-cost Federal student loan assistance.

Some for-profit institutions argue that because of the requirement that no more than 90 percent of their revenues can come from Title IV student aid—the 90/10 rule—they must ensure that their tuition always exceeds their students' Title IV eligibility. Thus, they cannot reduce tuition and, as Title IV aid amounts increase (*e.g.,* increases in the maximum annual loan amounts), they often must raise tuition.

Description: This experiment would allow an institution to establish a written policy where it would, for students enrolled in a particular educational program or on some other categorical basis (*e.g.,* students living at home or first-time freshman), reduce by at least $2,000 (the amount of the most recent statutory increase) the amount of an unsubsidized Direct Loan that the otherwise eligible student would receive, or eliminate the unsubsidized Direct Loan completely.

The institution must continue to ensure that each eligible student receives the full amount of any subsidized Direct Loan the student has requested, up to the statutory maximums for subsidized loans.

Although this experiment will allow reductions in Direct Loan amounts on other than a case-by-case basis, it would not allow institutions to discriminate against any borrower or applicant on the basis of race, national origin, religion, sex, marital status, age, or disability status.

The Department anticipates that experiments in this area would address at least one of three issues and requests that institutions wishing to be considered for this experiment clearly state which of the three following issues they wish to test.

(1) *Over-borrowing.* The one-size-fits-all nature of annual loan limits may give some students access to more in Federal loans than they need to complete their educational program. Some students may borrow more than is justified by the economic prospects for completers of their educational program (*i.e.,* major course of study or vocational area of concentration). Despite recent increases in loan limits, there is little empirical evidence of the effect additional loan amounts have on student access and completion. Experiments designed to address over-borrowing would reduce students' annual unsubsidized loan limits by at least $2,000, restoring those limits to no higher than their 2007–2008 level.

For-profit colleges interested in reducing their students' over-borrowing are encouraged to apply to participate in this experiment under both this issue and under issue 3, Unintended consequences at for-profit colleges.

(2) *Lack of loan availability.* Paradoxically, the same limits that may lead some students to borrow too much may prevent others from borrowing at all. Some institutions, particularly community colleges, have chosen not to participate in the Federal student loan programs, in part because they are concerned that high cohort default rates could jeopardize the Pell Grant eligibility of their students. As a result, some students attending those institutions must work longer hours or must use private student loans and credit cards to help finance their education. Institutions that wish to be considered for this experiment because they had previously chosen not to participate in the loan programs, would, as a condition of the experiment, become participating Direct Loan institutions and begin to make Direct Loans available to their students under the terms of this experiment.

(3) *Unintended consequences at for-profit colleges.* Some for-profit institutions argue that due to the 90/10 rule, they must set tuition charges above their students' Title IV aid eligibility. As a result, these institutions argue, increases in annual loan limits has the perverse consequence of not allowing them to reduce tuition and, in some instances, actually requires them to raise tuition. Additionally, some of these institutions claim that because of the 90/10 rule, they admit fewer financially needy students who bring with them increased amounts of Title IV aid eligibility. Allowing reduced loan limits for some for-profit institutions under this experiment will test these claims and, if they are true, could result in some institutions lowering tuitions. For-profit institutions wishing to participate in this experiment for purposes of addressing tuition levels would be required to include along with reductions in students' annual unsubsidized loan eligibility of at least $2,000, reductions in tuition of the same

amount. Requests to participate under this issue should address how reducing loan limits may affect long term decisions on tuition or other fees.

The Department is aware of the risks of reduced access to loans for some students. Participating institutions will be required to describe how they will ensure that their educational programs remain affordable for students in all financial circumstances and that the institution has maintained the economic and ethnic diversity of its students and graduates. In addition, participating institutions will be expected to describe how they will attempt to prevent increases in other forms of debt by students whose unsubsidized loan amounts were reduced, including increased use of private student loans and credit cards. Participants will be required to report data on these commitments, and experiments that are not meeting them will be terminated.

Institutions participating in this experiment must inform their students and prospective students that the institution is participating in the experiment and that the institution has established maximum loan limits for unsubsidized loans that are less than the statutory maximums.

Waivers: Institutions selected for this experiment will be exempt from the following statutory and regulatory provisions:

- HEA section 479A(c), which allows only case-by-case reductions in Direct Loan amounts.
- 34 CFR 685.301(a)(8), which provides that reductions in a student's eligibility for a Direct Loan can only be made on a case-by-case basis.

All other Direct Loan requirements will be in effect.

Evaluation: This experiment will be evaluated by using information provided by the institution, and any other information available to the Secretary, to determine whether students who received less than the statutory amounts of Direct Loans were able to enroll in, succeed, and complete their academic programs. The Secretary will compare those results with results from similar students who received the higher loan amounts. An analysis of the effect of the experiment on the diversity of the students enrolled in the institution will be conducted, especially as it relates to the numbers of low-income students. The evaluation will also attempt to determine if the lower educational loan debt of the students in the experiment resulted in fewer delinquencies and defaults.

As noted earlier, to support a recommendation for a change to a legal requirement, data must be provided from both a treatment group of students who participated in the experiment and a control or comparison group of students who received their student aid under existing rules. Because it is important that outcomes for the treatment group be compared to a group of students as similar to the treatment group as possible, some students who otherwise meet the eligibility requirements for this experiment may need to have their aid administered under existing requirements.

The Department will also evaluate this experiment by analyzing the information reported by the participating institutions to determine compliance with the experimental requirements that students do not receive increased amounts of non-Federal financing and to determine that participating for-profit institutions were able to reduce tuition and fees during the term of the experiment by an amount equal to the amount that student loan borrowing was reduced.

Reporting Requirements: The Secretary will require institutions participating in this experiment to report information on the students affected by the experiment and also on students enrolled in the same or in a similar program when the experiment was not in effect. The measures for these groups will likely include the number of enrolled students and their demographic information; tuition charges; the amount of grant and loan assistance awarded to each student; grades (or other measures of academic performance); the number of students enrolled at the beginning of the loan period; the number of withdrawals; the number of completions; and average student debt levels, including non-Federal debts.

Institutions must, upon the request of the Secretary, submit a description of their policy and procedures for determining the amount of the reduced loan eligibility.

Experiment 7—Direct Loan Program—PLUS Loans for parents of students with intellectual disabilities.

Background: Pursuant to section 484(s) of the HEA, students with intellectual disabilities who are enrolled in an approved comprehensive transition and postsecondary program (transition program) are eligible to receive funding from the Pell, Federal Work Study (FWS), and Federal Supplemental Educational Opportunity Grant (FSEOG) programs, notwithstanding that the students are not enrolled in an academic program that leads to a postsecondary educational credential. This statutory provision specifically provides that such students may not receive support from the Title IV loan programs. Because of this, an otherwise eligible parent is unable to receive a Direct PLUS loan to help offset the educational costs for their intellectually disabled son or daughter to enroll in an approved transition program. This places the family in a difficult financial situation when educational costs exceed, sometimes significantly, the limited other Title IV aid that may be available. This is, of course, particularly true for the parents of students who are not Pell or FSEOG eligible, arguably the target group for parent PLUS loans. Many of these parents may be forced to rely on less favorable private financing to support their child's education.

Description: This experiment would permit participating institutions to originate and disburse Direct PLUS loans to the otherwise eligible parents of dependent students with intellectual disabilities, as defined in the Department's regulations at 34 CFR 668.231(b), who are enrolled in an approved comprehensive transition and postsecondary program (transition program), as defined in the Department's regulations at 34 CFR 668.231(a). As a condition of the parent receiving a Direct PLUS loan under this experiment, the student, or the student's parent(s) if required, must sign an agreement with the institution allowing for the release to the Department of the student's academic and other records related to the student's participation in the transition program. The release must also provide that the student (or parent) will provide information on the student's post enrollment living and occupational status. Additionally, the parents must agree to provide the institution, for release to the Secretary, general information concerning how the family financed the student's attendance in the transition program.

The objective of this experiment is to determine if by providing this financing option to some parents, more students with intellectual disabilities will enroll in and complete an approved transition program. Another objective is to reduce the parents' debt burden caused by higher interest rates from non-Federal financing.

Waivers: Institutions selected for this experiment will be exempt from the following statutory and regulatory provisions:

- The portion of HEA section 484(s) that provides that students with intellectual disabilities who are enrolled in an approved comprehensive transition and postsecondary program may only receive Title IV funding from

the Pell Grant, FSEOG, and FWS programs.

- 34 CFR 668.230, which states that the only programs a student with intellectual disabilities who is enrolled in a comprehensive transition and postsecondary program is eligible for are the Pell Grant, FSEOG, and FWS programs.

All other Student Assistance General Provisions regulations and Direct Loan regulations, including all of the Direct PLUS Loan requirements of 34 CFR Part 685, will remain in effect.

Evaluation: This experiment will be evaluated by using information provided by the institution, and any other information available to the Secretary, to determine if making Direct PLUS loans available to the parents of students with intellectual disabilities who are enrolled in a transition program, increases the participation of those students and increases the likelihood of the students completing the transition program. The experiment will also test to see if the availability of PLUS loans reduces the reliance by the parents on non-Federal loans and other less favorable financing.

As noted earlier, to support a recommendation for a change to a legal requirement, data must be provided from both a treatment group and a control or comparison group. Because it is important that outcomes for the treatment group be compared to a group as similar to the treatment group as possible, some students who otherwise meet the eligibility requirements for this experiment may need to have their aid administered under existing requirements.

Reporting Requirements: Institutions participating in this experiment will be required to report information on the students and parents who benefit from the PLUS loan and on those who did not. The data to be collected and analyzed will likely include the number of students enrolled in the transition program; the types and amounts of Title IV aid received by the students and, if applicable, by the parents; and information on the students' enrollment in, and completion of, the transition program. Additional data will be collected from parents regarding the need for other educational financing.

Experiment 8—Student Eligibility—Eligibility of students with intellectual disabilities who are also enrolled in high school.

Background: Pursuant to section 484(s) of the HEA, students with intellectual disabilities who are enrolled in an approved comprehensive transition and postsecondary program (transition program) are eligible to receive funding from the Pell, Federal Work Study (FWS), and Federal Supplemental Educational Opportunity Grant (FSEOG) programs, notwithstanding that the students are not enrolled in an academic program that leads to a postsecondary educational credential. Section 484(a)(1) of the HEA specifically prohibits any student from receiving Title IV assistance if the student is also enrolled in a secondary school (*i.e.,* high school) and no statutory exception was provided for students enrolled in transition programs. Since the purpose of these comprehensive transition and postsecondary programs is to provide transition training to students who have intellectual disabilities, many of these students would benefit significantly from enrolling in the transition program at the postsecondary institution while still completing their high school curriculum. For many of these students enrolling in the postsecondary transition program while still in high school offers them the best chance for academic, vocational, and life success.

Description: This experiment would permit some students with intellectual disabilities who are enrolled in an approved comprehensive transition and postsecondary program at a Title IV eligible institution while also enrolled in secondary school—dually enrolled students—to receive Title IV funding, notwithstanding the general prohibition of eligibility for such students because of their dual enrollment. Institutions participating in this experiment will be required to obtain assurances from other entities that provide education services or financial support to students participating in the experiment, including local education agencies (LEAs) and State Vocational Rehabilitation Agencies, that those entities will maintain their support for the students receiving Federal financial aid under this experiment or to the students' families, unless the entity is legally prohibited from doing so.

The objective of this experiment is to determine if, by providing Title IV aid to otherwise eligible students with intellectual disabilities who are enrolled in an approved transition program while also enrolled in high school, the transition process for the students can be improved without placing financial burdens on their families.

Waivers: Institutions selected for this experiment will be exempt from the following statutory and regulatory provisions, but only for students with intellectual disabilities who are enrolled in approved transition programs:

- The provision of HEA section 484(a)(1) that precludes students who are enrolled in secondary school from receiving Title IV aid.
- 34 CFR 668.32(b), which excludes elementary or secondary school students from eligibility for Title IV assistance.

All other student eligibility requirements would remain in effect as would the specific requirements of each of the Title IV student assistance programs.

Evaluation: This experiment will be evaluated by using information provided by the institution, and any other information available to the Secretary, to determine if more intellectually disabled students enroll in and complete a comprehensive transition and postsecondary program than would have without the experiment. The evaluation will assess the success of dually enrolled students in the transition program relative to their peers who were not also enrolled in high school.

As noted earlier, to support a recommendation for a change to a legal requirement, data must be provided from both a treatment group of students who participated in the experiment and a control or comparison group of students who received their student aid under existing rules. Because it is important that outcomes for the treatment group be compared to a group of students as similar to the treatment group as possible, some students who otherwise meet the eligibility requirements for this experiment may need to have their aid administered under existing requirements.

Reporting Requirements: Institutions participating in this experiment will be required to report information on the students participating in the experiment and also on students enrolled in the transition program who were not also enrolled in high school. The data to be collected and analyzed for each group of students will likely include the number of students; the types and amounts of Title IV and other student aid received; the students' progress toward completion of the high school curriculum and progress toward completion of the transition program curriculum; and, where appropriate, employment information of the students who complete the transition program.

As a condition of the student receiving Title IV aid while enrolled in high school under this experiment, the student, or the student's parent(s), if required, must sign an agreement with the institution allowing for the release to the Department of the student's academic and other records related to

the student's participation in the transition program. The release must also provide that the student (or parent) will provide information on the student's post enrollment living and occupational status.

Institutions participating in this experiment will be required to provide information on whether other educational service providers maintained the students' programmatic and financial support while the student was still enrolled in high school.

Accessible Formats: Individuals with disabilities can obtain this document in an accessible format (*e.g.* braille, large print, audiotape, or compact disc) on request to the contact person listed under **FOR FURTHER INFORMATION CONTACT.**

Electronic Access to This Document: The official version of this document is the document published in the **Federal Register**. Free Internet access to the official edition of the **Federal Register** and the Code of Federal Regulations is available via the Federal Digital System at: *http://www.gpo.gov/fdsys.* At this site you can view this document, as well as all other documents of this Department published in the **Federal Register**, in text or Adobe Portable Document Format (PDF). To use PDF, you must have Adobe Acrobat Reader, which is available free at the site.

You may also access documents of the Department published in the **Federal Register** by using the article search feature at: *http://www.federalregister.gov.* Specifically, through the advanced search feature at this site, you can limit your search to documents published by the Department.

Program Authority: Section 487A(b); 20 U.S.C. 1094a(b).

Dated: October 21, 2011.

Eduardo M. Ochoa,

Assistant Secretary for Postsecondary Education.

[FR Doc. 2011–27880 Filed 10–26–11; 8:45 am]

BILLING CODE 4000–01–P

DEPARTMENT OF ENERGY

Federal Energy Regulatory Commission

[Docket Nos. IC11–1–000 and IC11–1F–000]

Commission Information Collection Activities (FERC–1 and FERC–1F); Comment Request; Submitted for OMB Review

AGENCY: Federal Energy Regulatory Commission.

ACTION: Notice.

SUMMARY: In compliance with the requirements of section 3507 of the Paperwork Reduction Act of 1995, 44 U.S.C. 3507, the Federal Energy Regulatory Commission (Commission or FERC) is submitting the information collections described below to the Office of Management and Budget (OMB) for review of the information collections requirements. Any interested person may file comments directly with OMB and should address a copy of those comments to the Commission as explained below. The Commission issued a Notice in the **Federal Register** (76 FR 46781, 10/3/2011) requesting public comments. FERC received one comment on the FERC–1 and the FERC–1F and has provided a response in this notice as well as in its submission to OMB.

DATES: Comments on the collection of information are due by November 28, 2011.

ADDRESSES: Address comments on the collection of information to the Office of Management and Budget, Office of Information and Regulatory Affairs, Attention: Federal Energy Regulatory Commission Desk Officer. Comments to Created by OMB should be filed electronically, c/o *oira__submission@omb.eop.gov* and include OMB Control Numbers 1902–0021 (for FERC–1) and 1902–0029 (for FERC–1F) as a point of reference. For comments that pertain to only one of the collections, specify the appropriate collection and OMB Control Number. The Desk Officer may be reached by telephone at (202) 395–4718.

A copy of the comments should also be sent to: Federal Energy Regulatory Commission, Secretary of the Commission, 888 First Street, NE., Washington, DC 20426. Comments may be filed either on paper or on CD/DVD, and should refer to Docket Nos. IC11–1–001 and IC11–1F as appropriate. Documents must be prepared in an acceptable filing format and in compliance with Commission submission guidelines at *http://www.ferc.gov/help/submission-guide.asp.* eFiling and eSubscription are not available for Docket No. IC11–1F–001, due to a system issue, but are available for Docket No. IC11–1–001.

All comments may be viewed, printed or downloaded remotely via the Internet through FERC's homepage using the ''eLibrary'' link. For user assistance, contact *ferconlinesupport@ferc.gov* or toll-free at (866) 208–3676, or for TTY, contact (202) 502–8659.

FOR FURTHER INFORMATION CONTACT: Ellen Brown may be reached by email at *DataClearance@FERC.gov,* by telephone at (202) 502–8663, and by fax at (202) 273–0873.

SUPPLEMENTARY INFORMATION: In accordance with sections 304 and 309 of the Federal Power Act, FERC is authorized to collect and record data to the extent it considers necessary, and to prescribe rules and regulations concerning accounts, records and memoranda. The Commission may prescribe a system of accounts for jurisdictional companies and after notice and an opportunity for hearing may determine the accounts in which particular outlays and receipts will be entered, charged or credited.

The Form No. 1 is a comprehensive financial and operating report submitted for electric rate regulation and financial audits. Major is defined as having (1) one million Megawatt hours or more; (2) 100 megawatt hours of annual sales for resale; (3) 500 megawatt hours of annual power exchange delivered; or (4) 500 megawatt hours of annual wheeling for others (deliveries plus losses).

FERC Form 1–F is designed to collect financial and operational information from non-major public utilities and licensees. Non-major is defined as having total annual sales of 10,000 megawatt-hours or more in the previous calendar year and not classified as Major. The Commission collects Form Nos. 1 and 1–F information as prescribed in 18 CFR 141.1 and 141.2.

Under the existing regulations FERC jurisdictional entities subject to its Uniform System of Accounts [1] must annually (quarterly for the 3Q) file with the Commission a complete set of financial statements, along with other selected financial and non financial data through the submission of FERC Forms 1, 1–F, and 3Q.[2] The FERC Annual/Quarterly Report Forms provide the Commission, as well as others, with an informative picture of the jurisdictional entities financial condition along with other relevant data that is used by the Commission, as well as others, in making economic judgments about the entity or its industry.

The information collected in the forms is used by Commission staff, state regulatory agencies and others in the review of the financial condition of regulated companies. The information is also used in various rate proceedings, industry analyses and in the Commission's audit programs and as appropriate, for the computation of

[1] *See* 18 CFR part 201.

[2] The FERC Form 3Q data collection (OMB Control No. 205) is not being renewed as part of this proceeding. Some information regarding the Form 3Q is included here as it relates to the FERC Forms 1 and 1F.

annual charges based on certain schedules contained on the forms. The Commission provides the information to the public, interveners and all interested parties to assist in the proceedings before the Commission.

Additionally, the uniformity of information helps to present accurately the entity's financial condition and produces comprehensive data related to the entity's financial history helping to act as a guide for future action. The uniformity provided by the Commission's chart of accounts and related accounting instructions permits comparability and financial statement analysis of data provided by jurisdictional entities. Comparability of data and financial statement analysis for a particular entity from one period to the next, or between entities, within the same industry, would be difficult to achieve if each company maintained its own accounting records using dissimilar accounting methods and classifications to record similar transactions and events.

The FERC Annual Report Forms provide the Commission, as well as others, with an informative picture of the jurisdictional entities' financial condition along with other relevant data that is used by the Commission in making economic judgments about the entity or its industry. For financial information to be useful to the Commission, it must be understandable, relevant, reliable and timely.

Public Comment and Commission Response

The Commission received one comment from the Bureau of Economic Analysis (BEA) in regards to the Forms Nos. 1 and 1–F. In that comment, BEA requests additional reporting in Forms Nos. 1 and 1–F. BEA relies on this data collection for its analysis. In response, the Commission intends to work with BEA should there be a need to make any changes to this data collection.

ACTION: The Commission is requesting a three-year extension of the FERC Forms 1 and 1F reporting requirements, with no changes to the forms.

Burden Statement: The estimated annual public reporting burden is reflected in the following table:

Data collection	Number of respondents annually (1)	Number of responses per respondent (2)	Average burden hours per response (3)	Total annual burden hours (1) × (2) × (3)
Form 1	209	1	1,162	242,858
Form 1F	5	1	116	580
Total				243,438

The total estimated annual cost burden to respondents on the FERC Form 1 is $12,385,758 (242,858 hours × $51/hour [3]). The average cost per respondent is $59,262.

The total estimated annual cost burden to respondents on the FERC Form 1F is $29,580 (580 hours × $51/hour [3]). The average cost per respondent is $5,916.

The reporting burden includes the total time, effort, or financial resources expended to generate, maintain, retain, disclose, or provide the information including: (1) Reviewing instructions; (2) developing, acquiring, installing, and utilizing technology and systems for the purposes of collecting, validating, verifying, processing, maintaining, disclosing and providing information; (3) adjusting the existing ways to comply with any previously applicable instructions and requirements; (4) training personnel to respond to a collection of information; (5) searching data sources; (6) completing and reviewing the collections of information; and (7) transmitting or otherwise disclosing the information.

[3] The per hour figures were obtained from the Bureau of Labor Statistics National Industry-Specific Occupational and Employment Wage Estimates (*http://www.bls.gov/oes/current/naics4_221100.htm*), and are based on the mean wage statistics for staff in the areas of management, business and financial, legal and administrative. The mean wage was then increased by 20% to account for benefits/overhead.

The estimate of cost for respondents is based upon salaries for professional and clerical support, as well as direct and indirect overhead costs. Direct costs include all costs directly attributable to providing this information, such as administrative costs and the cost for information technology. Indirect or overhead costs are costs incurred by an organization in support of its mission. These costs apply to activities which benefit the whole organization rather than any one particular function or activity.

Comments are invited on: (1) Whether the proposed collections of information are necessary for the proper performance of the functions of the Commission, including whether the information will have practical utility; (2) the accuracy of the agency's estimate of the burden of the proposed collections of information, including the validity of the methodology and assumptions used; (3) ways to enhance the quality, utility and clarity of the information to be collected; and (4) ways to minimize the burden of the collections of information on those who are to respond, including the use of appropriate automated, electronic, mechanical, or other technological collection techniques or other forms of information technology (*e.g.* permitting electronic submission of responses).

Dated: October 20, 2011.

Kimberly D. Bose,

Secretary.

[FR Doc. 2011–27828 Filed 10–26–11; 8:45 am]

BILLING CODE 6717–01–P

DEPARTMENT OF ENERGY

Federal Energy Regulatory Commission

[Docket No. CP12–7–000]

El Paso Natural Gas Company; Notice of Application

Take notice that on October 7, 2011, El Paso Natural Gas Company (El Paso), P.O. Box 1087, Colorado Springs, Colorado 80904, filed in the above referenced docket an application pursuant to section 3 of the Natural Gas Act (NGA), requesting amendment and reissuance of its Presidential Permits to increase the combined daily export capacity at three separate border crossings all located in Cochise County, Arizona, all as more fully set forth in the application which is on file with the Commission and open to public inspection. Concurrent with this filing, El Paso filed an application under section 7(c) in Docket No. CP12–6–000, requesting authorization to modify, construct, own and operate certain compressor and lateral facilities and existing delivery meter stations, in

Cochise County, Arizona. The project, referred to as the ''Willcox Lateral 2013 Expansion Project'', will reconfigure El Paso's Willcox Compressor Station from mainline service to lateral service by completing certain piping and facility modifications to the station. The filing is available for review at the Commission in the Public Reference Room or may be viewed on the Commission's Web site web at *http://www.ferc.gov* using the ''eLibrary'' link. Enter the docket number excluding the last three digits in the docket number field to access the document. For assistance, contact FERC at *FERCOnlineSupport@ferc.gov* or call toll-free, (886) 208–3676 or TYY, (202) 502–8659.

Any questions concerning this application may be directed to Susan C. Stires, Director, Regulatory Affairs Department, El Paso Natural Gas Company, P.O. Box 1087, Colorado Springs, Colorado 80904, by telephone at (719) 667–7514, by facsimile at (719) 667–7534, or by email at *EPNGRegulatoryAffairs@elpaso.com* or Craig V. Richardson, Vice President & General Counsel, El Paso Natural Gas Company, P.O. Box 1087, Colorado Springs, Colorado 80904, by telephone at (719) 520–4227, by facsimile at (719) 520–4898, or by email at *EPNGLegalFERC@elpaso.com*.

Pursuant to Section 157.9 of the Commission's rules, 18 CFR 157.9, within 90 days of this Notice the Commission staff will either: complete its environmental assessment (EA) and place it into the Commission's public record (eLibrary) for this proceeding, or issue a Notice of Schedule for Environmental Review. If a Notice of Schedule for Environmental Review is issued, it will indicate, among other milestones, the anticipated date for the Commission staff's issuance of the final environmental impact statement (FEIS) or EA for this proposal. The filing of the EA in the Commission's public record for this proceeding or the issuance of a Notice of Schedule for Environmental Review will serve to notify federal and state agencies of the timing for the completion of all necessary reviews, and the subsequent need to complete all Federal authorizations within 90 days of the date of issuance of the Commission staff's FEIS or EA.

There are two ways to become involved in the Commission's review of this project. First, any person wishing to obtain legal status by becoming a party to the proceedings for this project should, on or before the comment date stated below file with the Federal Energy Regulatory Commission, 888 First Street, NE., Washington, DC 20426, a motion to intervene in accordance with the requirements of the Commission's Rules of Practice and Procedure (18 CFR 385.214 or 385.211) and the Regulations under the NGA (18 CFR 157.10). A person obtaining party status will be placed on the service list maintained by the Secretary of the Commission and will receive copies of all documents filed by the applicant and by all other parties. A party must submit 14 copies of filings made in the proceeding with the Commission and must mail a copy to the applicant and to every other party. Only parties to the proceeding can ask for court review of Commission orders in the proceeding.

However, a person does not have to intervene in order to have comments considered. The second way to participate is by filing with the Secretary of the Commission, as soon as possible, an original and two copies of comments in support of or in opposition to this project. The Commission will consider these comments in determining the appropriate action to be taken, but the filing of a comment alone will not serve to make the filer a party to the proceeding. The Commission's rules require that persons filing comments in opposition to the project provide copies of their protests only to the party or parties directly involved in the protest.

Persons who wish to comment only on the environmental review of this project should submit an original and two copies of their comments to the Secretary of the Commission. Environmental commentors will be placed on the Commission's environmental mailing list, will receive copies of the environmental documents, and will be notified of meetings associated with the Commission's environmental review process. Environmental commentors will not be required to serve copies of filed documents on all other parties. However, the non-party commentors will not receive copies of all documents filed by other parties or issued by the Commission (except for the mailing of environmental documents issued by the Commission) and will not have the right to seek court review of the Commission's final order.

Motions to intervene, protests and comments may be filed electronically via the internet in lieu of paper; see, 18 CFR 385.2001(a)(1)(iii) and the instructions on the Commission's Web site under the ''e-Filing'' link. The Commission strongly encourages electronic filings.

Comment Date: November 10, 2011.

Dated: October 20, 2011.

Kimberly D. Bose,

Secretary.

[FR Doc. 2011–27827 Filed 10–26–11; 8:45 am]

BILLING CODE 6717–01–P

DEPARTMENT OF ENERGY

Federal Energy Regulatory Commission

[Docket No. CP12–5–000]

Trunkline Gas Company, LLC, Sea Robin Pipeline Company, LLC; Notice of Application

Take notice that on October 7, 2011, Trunkline Gas Company, LLC (Trunkline) and Sea Robin Pipeline Company, LLC (Sea Robin), together referred to as Applicants, both located at 5444 Westheimer Road, Houston, Texas 77056–5306, filed jointly in Docket No. CP12–5–000 an application, pursuant to sections 7(b) and 7(c) of the Natural Gas Act (NGA), for permission and approval for Trunkline to abandon by sale to Sea Robin and for Sea Robin to acquire certain natural gas facilities located offshore Louisiana and Texas in the Gulf of Mexico and onshore in the State of Louisiana, all as more fully set forth in the application which is on file with the Commission and open to public inspection.

Specifically, Trunkline's facilities to be transferred to Sea Robin include: (1) Facilities extending from Vermilion Block 23 offshore Louisiana to Trunkline's onshore Kaplan Compressor Station in Vermilion Parish, Louisiana (Vermilion System); (2) facilities extending from South Marsh Island Block 268, Ship Shoal Block 274, Ewing Bank Block 826 and Grand Isle Block 82 offshore Louisiana to Trunkline's onshore Patterson Compressor Station in St. Mary Parish, Louisiana (Terrebonne System); and (3) Trunkline's 33.33 percent ownership interest in non-contiguous facilities located in Brazos Area Block A–47 offshore Texas (Brazos A–47 System). Upon completion of the transfer, Trunkline will no longer have any offshore facilities. Applicants also propose changes to their tariffs to reflect the transfer of the facilities and commencement of service on those facilities under Sea Robin's tariff.

Any questions regarding the application should be directed to Stephen T. Veatch, Sr., Director, Certificates and Tariffs, Trunkline Gas Company, LLC, P.O. Box 4967, Houston, Texas 77210–4967, or by calling (713) 989–2024, or by email at *stephen.veatch@sug.com.*

There are two ways to become involved in the Commission's review of this project. First, any person wishing to obtain legal status by becoming a party to the proceedings for this project should, on or before the comment date stated below, file with the Federal Energy Regulatory Commission, 888 First Street, NE., Washington, DC 20426, a motion to intervene in accordance with the requirements of the Commission's Rules of Practice and Procedure (18 CFR 385.214 or 385.211) and the Regulations under the NGA (18 CFR 157.10). A person obtaining party status will be placed on the service list maintained by the Secretary of the Commission and will receive copies of all documents filed by the applicant and by all other parties. A party must submit an original and 7 copies of filings made with the Commission and must mail a copy to the applicant and to every other party in the proceeding. Only parties to the proceeding can ask for court review of Commission orders in the proceeding.

However, a person does not have to intervene in order to have comments considered. The second way to participate is by filing with the Secretary of the Commission, as soon as possible, an original and two copies of comments in support of or in opposition to this project. The Commission will consider these comments in determining the appropriate action to be taken, but the filing of a comment alone will not serve to make the filer a party to the proceeding. The Commission's rules require that persons filing comments in opposition to the project provide copies of their protests only to the party or parties directly involved in the protest.

The Commission strongly encourages electronic filings of comments, protests and interventions in lieu of paper using the ''eFiling'' link at *http://www.ferc.gov.* Persons unable to file electronically should submit an original and 7 copies of the protest or intervention to the Federal Energy Regulatory Commission, 888 First Street, NE., Washington, DC 20426. This filing is accessible on-line at *http://www.ferc.gov,* using the ''eLibrary'' link and is available for review in the Commission's Public Reference Room in Washington, DC. There is an ''eSubscription'' link on the Web site that enables subscribers to receive email notification when a document is added to a subscribed docket(s). For assistance with any FERC Online service, please email *FERCOnlineSupport@ferc.gov,* or call (866) 208–3676 (toll free). For TTY, call (202) 502–8659.

Comment Date: November 10, 2011.

Dated: October 20, 2011.

Kimberly D. Bose,

Secretary.

[FR Doc. 2011–27831 Filed 10–26–11; 8:45 am]

BILLING CODE 6717–01–P

DEPARTMENT OF ENERGY

Federal Energy Regulatory Commission

[Project No. 5984–063]

Erie Boulevard Hydropower, L.P.; Notice of Application Accepted for Filing, Soliciting Comments, Motions To Intervene, and Protests

Take notice that the following hydroelectric application has been filed with the Commission and is available for public inspection:

a. *Types of Application:* Request to expand project boundary.

b. *Project No.:* 5984–063.

c. *Date Filed:* May 10, 2011.

d. *Applicant:* Erie Boulevard Hydropower, L.P. (dba Brookfield Renewable Power).

e. *Name of Projects:* Oswego Falls Hydroelectric Project.

f. *Location:* Oswego River in the City of Fulton, Oswego County, New York.

g. *Filed Pursuant to:* Federal Power Act, 16 U.S.C. 791a–825r.

h. *Applicant Contact:* Steven Murphy, Lake Ontario Production Center, 33 West 1st Street South, Fulton, NY 13069, (315) 598–6130

i. *FERC Contact:* Mr. Anthony DeLuca, (202) 502–6632, *Anthony.DeLuca@ferc.gov.*

j. *Deadline for filing comments, motions to intervene, and protests, is 30 days from the issuance date of this notice.* All documents may be filed electronically via the Internet. See, 18 CFR 385.2001(a)(1)(iii) and the instructions on the Commission's Web site at *http://www.ferc.gov/docs-filing/efiling.asp.* If unable to be filed electronically, documents may be paper-filed. To paper-file, an original and seven copies should be mailed to: Secretary, Federal Energy Regulatory Commission, 888 First Street, NE., Washington, DC 20426. Commenters can submit brief comments up to 6,000 characters, without prior registration, using the eComment system at *http://www.ferc.gov/docs-filing/ecomment.asp.* You must include your name and contact information at the end of your comments.

Please include the project number (P–5984–063) on any comments, motions, or recommendations filed.

k. *Description of Request:* The applicant proposes to revise the project boundary and project description to include the New York State Canal Corporation's Lock 2 and embankment dam on the east side of the Oswego River. These structures are existing structures and require no construction activities.

l. *Locations of the Application:* A copy of the application is available for inspection and reproduction at the Commission's Public Reference Room, located at 888 First Street, NE., Room 2A, Washington, DC 20426, or by calling (202) 502–8371. This filing may also be viewed on the Commission's Web site at *http://www.ferc.gov/docs-filing/elibrary.asp.* Enter the docket number excluding the last three digits in the docket number field to access the document. You may also register online at *http://www.ferc.gov/docs-filing/esubscription.asp* to be notified via email of new filings and issuances related to this or other pending projects. For assistance, call 1–866–208–3676 or email *FERCOnlineSupport@ferc.gov,* for TTY, call (202) 502–8659. A copy is also available for inspection and reproduction at the address in item (h) above.

m. Individuals desiring to be included on the Commission's mailing list should so indicate by writing to the Secretary of the Commission.

n. *Comments, Protests, or Motions to Intervene:* Anyone may submit comments, a protest, or a motion to intervene in accordance with the requirements of Rules of Practice and Procedure, 18 CFR 385.210, .211, .214. In determining the appropriate action to take, the Commission will consider all protests or other comments filed, but only those who file a motion to intervene in accordance with the Commission's Rules may become a party to the proceeding. Any comments, protests, or motions to intervene must be received on or before the specified comment date for the particular application.

o. *Filing and Service of Responsive Documents:* Any filing must (1) Bear in all capital letters the title ''COMMENTS'', ''PROTEST'', or ''MOTION TO INTERVENE'' as applicable; (2) set forth in the heading the name of the applicant and the project number of the application to which the filing responds; (3) furnish the name, address, and telephone number of the person protesting or intervening; and (4) otherwise comply with the requirements of 18 CFR 385.2001 through 385.2005. All comments, motions to intervene, or protests must set forth their evidentiary basis and otherwise comply with the requirements of 18 CFR 4.34(b). All

comments, motions to intervene, or protests should relate to project works which are the subject of the license surrender. Agencies may obtain copies of the application directly from the applicant. A copy of any protest or motion to intervene must be served upon each representative of the applicant specified in the particular application. If an intervener files comments or documents with the Commission relating to the merits of an issue that may affect the responsibilities of a particular resource agency, they must also serve a copy of the document on that resource agency. A copy of all other filings in reference to this application must be accompanied by proof of service on all persons listed in the service list prepared by the Commission in this proceeding, in accordance with 18 CFR 4.34(b) and 385.2010.

Dated: October 20, 2011.

Kimberly D. Bose,

Secretary.

[FR Doc. 2011–27830 Filed 10–26–11; 8:45 am]

BILLING CODE 6717–01–P

DEPARTMENT OF ENERGY

Federal Energy Regulatory Commission

[Docket No. CP12–6–000]

El Paso Natural Gas Company; Notice of Application

Take notice that on October 11, 2011, El Paso Natural Gas Company (El Paso), P.O. Box 1087, Colorado Springs, Colorado 80904, filed in the above referenced docket an application pursuant to section 7(c) of the Natural Gas Act (NGA) and Part 157 of the Commission's regulations, requesting authorization to modify, construct, own and operate certain compressor and lateral facilities and existing delivery meter stations, in Cochise County, Arizona, all as more fully set forth in the application which is on file with the Commission and open to public inspection. The project, referred to as the ''Willcox Lateral 2013 Expansion Project,'' will reconfigure El Paso's Willcox Compressor Station from mainline service to lateral service by completing certain piping and facility modifications to the station. Concurrent with this filing, El Paso filed an application under section 3 of the NGA in Docket No. CP12–7–000, requesting amendment and reissuance of its existing Presidential Permits to increase the export capacity at three separate border crossing facilities in Cochise County, Arizona. The filing is available for review at the Commission in the Public Reference Room or may be viewed on the Commission's Web site at *http://www.ferc.gov* using the ''eLibrary'' link. Enter the docket number excluding the last three digits in the docket number field to access the document. For assistance, contact FERC at *FERCOnlineSupport@ferc.gov* or call toll-free, (886) 208–3676 or TTY, (202) 502–8659.

Any questions concerning this application may be directed to Susan C. Stires, Director, Regulatory Affairs Department, El Paso Natural Gas Company, P.O. Box 1087, Colorado Springs, Colorado 80904, by telephone at (719) 667–7514, by facsimile at (719) 667–7534, or by email at *EPNGRegulatoryAffairs@elpaso.com* or Craig V. Richardson, Vice President & General Counsel, El Paso Natural Gas Company, P.O. Box 1087, Colorado Springs, Colorado 80904, by telephone at (719) 520–4227, by facsimile at (719) 520–4898, or by email at *EPNGLegalFERC@elpaso.com*.

Pursuant to Section 157.9 of the Commission's rules, 18 CFR 157.9, within 90 days of this Notice the Commission staff will either: Complete its environmental assessment (EA) and place it into the Commission's public record (eLibrary) for this proceeding, or issue a Notice of Schedule for Environmental Review. If a Notice of Schedule for Environmental Review is issued, it will indicate, among other milestones, the anticipated date for the Commission staff's issuance of the final environmental impact statement (FEIS) or EA for this proposal. The filing of the EA in the Commission's public record for this proceeding or the issuance of a Notice of Schedule for Environmental Review will serve to notify federal and state agencies of the timing for the completion of all necessary reviews, and the subsequent need to complete all federal authorizations within 90 days of the date of issuance of the Commission staff's FEIS or EA.

There are two ways to become involved in the Commission's review of this project. First, any person wishing to obtain legal status by becoming a party to the proceedings for this project should, on or before the comment date stated below file with the Federal Energy Regulatory Commission, 888 First Street, NE., Washington, DC 20426, a motion to intervene in accordance with the requirements of the Commission's Rules of Practice and Procedure (18 CFR 385.214 or 385.211) and the Regulations under the NGA (18 CFR 157.10). A person obtaining party status will be placed on the service list maintained by the Secretary of the Commission and will receive copies of all documents filed by the applicant and by all other parties. A party must submit 14 copies of filings made in the proceeding with the Commission and must mail a copy to the applicant and to every other party. Only parties to the proceeding can ask for court review of Commission orders in the proceeding.

However, a person does not have to intervene in order to have comments considered. The second way to participate is by filing with the Secretary of the Commission, as soon as possible, an original and two copies of comments in support of or in opposition to this project. The Commission will consider these comments in determining the appropriate action to be taken, but the filing of a comment alone will not serve to make the filer a party to the proceeding. The Commission's rules require that persons filing comments in opposition to the project provide copies of their protests only to the party or parties directly involved in the protest.

Persons who wish to comment only on the environmental review of this project should submit an original and two copies of their comments to the Secretary of the Commission. Environmental commentors will be placed on the Commission's environmental mailing list, will receive copies of the environmental documents, and will be notified of meetings associated with the Commission's environmental review process. Environmental commentors will not be required to serve copies of filed documents on all other parties. However, the non-party commentors will not receive copies of all documents filed by other parties or issued by the Commission (except for the mailing of environmental documents issued by the Commission) and will not have the right to seek court review of the Commission's final order.

Motions to intervene, protests and comments may be filed electronically via the internet in lieu of paper; see, 18 CFR 385.2001(a)(1)(iii) and the instructions on the Commission's Web site under the ''e-Filing'' link. The Commission strongly encourages electronic filings.

Comment Date: November 10, 2011.

Dated: October 20, 2011.

Kimberly D. Bose,

Secretary.

[FR Doc. 2011–27826 Filed 10–26–11; 8:45 am]

BILLING CODE 6717–01–P

DEPARTMENT OF ENERGY

Federal Energy Regulatory Commission

Combined Notice of Filings #1

Take notice that the Commission received the following electric rate filings:

Docket Numbers: ER10–2302–003.
Applicants: Public Service Company of New Mexico.
Description: Public Service Company of New Mexico submits Notice of Non-Material Change in Status.
Filed Date: 10/18/2011.
Accession Number: 20111018–5072.
Comment Date: 5 p.m. Eastern Time on Tuesday, November 8, 2011.

Docket Numbers: ER11–4307–000.
Applicants: Green Mountain Energy Company.
Description: Supplement to Market Power Analysis of Green Mountain Energy Company.
Filed Date: 10/06/2011.
Accession Number: 20111006–5153.
Comment Date: 5 p.m. Eastern Time on Thursday, October 27, 2011.

Docket Numbers: ER11–4308–000.
Applicants: Reliant Energy Northeast LLC.
Description: Supplement to Market Power Analysis of Reliant Energy Northeast LLC.
Filed Date: 10/06/2011.
Accession Number: 20111006–5152.
Comment Date: 5 p.m. Eastern Time on Thursday, October 27, 2011.

Docket Numbers: ER11–4600–001.
Applicants: Moguai Energy LLC.
Description: Moguai Energy LLC submits tariff filing per 35: Revised MBR 10132011 to be effective 9/22/2011.
Filed Date: 10/18/2011.
Accession Number: 20111018–5018.
Comment Date: 5 p.m. Eastern Time on Tuesday, November 8, 2011.

Docket Numbers: ER12–103–000.
Applicants: Southern California Edison Company.
Description: Southern California Edison Company submits tariff filing per 35.13(a)(2)(iii: LGIA Desert Stateline Project, Desert Stateline, LLC to be effective 10/19/2011.
Filed Date: 10/18/2011.
Accession Number: 20111018–5024.
Comment Date: 5 p.m. Eastern Time on Tuesday, November 8, 2011.

Docket Numbers: ER12–104–000.
Applicants: WFM Intermediary New England, LLC.
Description: WFM Intermediary New England, LLC submits tariff filing per 35.15: Cancellation of Tariff to be effective 10/18/2011.
Filed Date: 10/18/2011.
Accession Number: 20111018–5025.
Comment Date: 5 p.m. Eastern Time on Tuesday, November 8, 2011.

Docket Numbers: ER12–105–000.
Applicants: Southwestern Public Service Company.
Description: Southwestern Public Service Company submits tariff filing per 35.13(a)(2)(iii: 2011–10–18_SPS–RBEC–GSEC–Const Agrmt 649–SPS to be effective 10/7/2011.
Filed Date: 10/18/2011.
Accession Number: 20111018–5035.
Comment Date: 5 p.m. Eastern Time on Tuesday, November 8, 2011.

Docket Numbers: ER12–106–000.
Applicants: Southern California Edison Company.
Description: Southern California Edison Company submits tariff filing per 35.13(a)(2)(iii: LGIA Silver State South Solar Project, LLC-Silver State Solar Power South, LLC to be effective 10/19/2011.
Filed Date: 10/18/2011.
Accession Number: 20111018–5037.
Comment Date: 5 p.m. Eastern Time on Tuesday, November 8, 2011.

Docket Numbers: ER12–107–000.
Applicants: PJM Interconnection, LLC.
Description: PJM Interconnection, LLC submits tariff filing per 35.13(a)(2)(iii: Queue No. W3–108; Original Service Agreement No. 3077 to be effective 9/19/2011.
Filed Date: 10/18/2011.
Accession Number: 20111018–5039.
Comment Date: 5 p.m. Eastern Time on Tuesday, November 8, 2011.

Docket Numbers: ER12–108–000.
Applicants: PJM Interconnection, LLC.
Description: PJM Interconnection, LLC submits tariff filing per 35.13(a)(2)(iii: Queue No. X1–054; Original Service Agreement No. 3078 to be effective 9/19/2011.
Filed Date: 10/18/2011.
Accession Number: 20111018–5040.
Comment Date: 5 p.m. Eastern Time on Tuesday, November 8, 2011.

Docket Numbers: ER12–109–000.
Applicants: Arizona Public Service Company.
Description: Arizona Public Service Company submits tariff filing per 35.13(a)(2)(iii: Multiple Non-conforming service agreements pursuant to the APS OATT to be effective 12/17/2011.
Filed Date: 10/18/2011.
Accession Number: 20111018–5063.
Comment Date: 5 p.m. Eastern Time on Tuesday, November 8, 2011.

Docket Numbers: ER12–110–000.
Applicants: Arizona Public Service Company.
Description: Arizona Public Service Company submits tariff filing per 35.13(a)(2)(iii: Multiple Rate Schedules pursuant to Section 205 of the FPA to be effective 12/17/2011.
Filed Date: 10/18/2011.
Accession Number: 20111018–5066.
Comment Date: 5 p.m. Eastern Time on Tuesday, November 8, 2011.

Docket Numbers: ER12–111–000.
Applicants: NorthWestern Corporation.
Description: NorthWestern Corporation submits tariff filing per 35.13(a)(2)(iii: Service Agreement No. 609—Western Area Power Administration to be effective 10/19/2011.
Filed Date: 10/18/2011.
Accession Number: 20111018–5081.
Comment Date: 5 p.m. Eastern Time on Tuesday, November 8, 2011.

Docket Numbers: ER12–112–000.
Applicants: Entergy Arkansas, Inc.
Description: Entergy Arkansas, Inc. submits tariff filing per 35.13(a)(2)(iii: Entergy/AMEREN/AECI 3–Party Agreement to be effective 12/18/2011.
Filed Date: 10/18/2011.
Accession Number: 20111018–5085.
Comment Date: 5 p.m. Eastern Time on Tuesday, November 8, 2011.

Docket Numbers: ER12–113–000.
Applicants: Midwest Independent Transmission System Operator, Inc.
Description: Midwest Independent Transmission System Operator, Inc. submits tariff filing per 35.13(a)(2)(iii: 10–18–11 GFA 368 Correction to be effective 7/28/2010.
Filed Date: 10/18/2011.
Accession Number: 20111018–5096.
Comment Date: 5 p.m. Eastern Time on Tuesday, November 8, 2011.

The filings are accessible in the Commission's eLibrary system by clicking on the links or querying the docket number.

Any person desiring to intervene or protest in any of the above proceedings must file in accordance with Rules 211 and 214 of the Commission's Regulations (18 CFR 385.211 and 385.214) on or before 5 p.m. Eastern time on the specified comment date. Protests may be considered, but intervention is necessary to become a party to the proceeding.

eFiling is encouraged. More detailed information relating to filing requirements, interventions, protests, service, and qualifying facilities filings can be found at: *http://www.ferc.gov/docs-filing/efiling/filing-req.pdf.* For other information, call (866) 208–3676 (toll free). For TTY, call (202) 502–8659.

Dated: October 19, 2011.

Nathaniel J. Davis, Sr.,

Deputy Secretary.

[FR Doc. 2011–27762 Filed 10–26–11; 8:45 am]

BILLING CODE 6717–01–P

DEPARTMENT OF ENERGY

Federal Energy Regulatory Commission

[Docket No. PR11–108–003]

Atlanta Gas Light Company; Notice of Compliance Filing

Take notice that on October 19, 2011, Atlanta Gas Light Company filed a revised Statement of Operating Conditions to incorporate three modifications to comply with an October 4, 2011, unpublished Director Letter order, as more fully described in the filing.

Any person desiring to participate in this rate filing must file in accordance with Rules 211 and 214 of the Commission's Rules of Practice and Procedure (18 CFR 385.211 and 385.214). Protests will be considered by the Commission in determining the appropriate action to be taken, but will not serve to make protestants parties to the proceeding. Any person wishing to become a party must file a notice of intervention or motion to intervene, as appropriate. Such notices, motions, or protests must be filed on or before the date as indicated below. Anyone filing an intervention or protest must serve a copy of that document on the Applicant. Anyone filing an intervention or protest on or before the intervention or protest date need not serve motions to intervene or protests on persons other than the Applicant.

The Commission encourages electronic submission of protests and interventions in lieu of paper using the ''eFiling'' link at *http://www.ferc.gov*. Persons unable to file electronically should submit an original and 7 copies of the protest or intervention to the Federal Energy Regulatory Commission, 888 First Street, NE., Washington, DC 20426.

This filing is accessible on-line at *http://www.ferc.gov,* using the ''eLibrary'' link and is available for review in the Commission's Public Reference Room in Washington, DC. There is an ''eSubscription'' link on the Web site that enables subscribers to receive e-mail notification when a document is added to a subscribed docket(s). For assistance with any FERC Online service, please e-mail *FERCOnlineSupport@ferc.gov,* or call (866) 208–3676 (toll free). For TTY, call (202) 502–8659.

Comment Date: 5 p.m. Eastern Time on Monday, October 31, 2011.

Dated: October 20, 2011.

Kimberly D. Bose,

Secretary.

[FR Doc. 2011–27825 Filed 10–26–11; 8:45 am]

BILLING CODE 6717–01–P

DEPARTMENT OF ENERGY

Federal Energy Regulatory Commission

[Project Nos. 13391–001,13392–001, 13500–001, 13424–001, 13809–001, 13649–001, 13651–001]

Hydro Green Energy, LLC; Notice of Intent To File License Applications and Approving Use of the Traditional Licensing Process

a. *Type of Filing:* Notice of Intent To File License Applications and Approving Requests to Use the Traditional Licensing Process.

b. *Project Nos.:* 13391–001, 13392–001, 13500–001, 13424–001, 13809–001, 13649–001, and 13651–001.

c. *Date Filed:* August 23, 2011.

d. *Submitted By:* Hydro Green Energy, LLC (Hydro Green).

e. *Name of Projects:* Lock and Dam 5a, Project 13391–001; Lock and Dam 9, Project 13392–001; Lock and Dam 12, Project 13500–001; Lock and Dam 13, Project 13424–001; Lock and Dam 14, Project 13809–001; Lock and Dam 20, Project 13649–001; and Lock and Dam 22, Project 13651–001.

f. *Location:* At existing locks and dams owned by the U.S. Army Corps of Engineers on the Upper Mississippi River in Minnesota, Wisconsin, Illinois, Iowa, and Missouri (see table below for specific project locations).

Project No.	Project name	Counties/States	City/Town
P–13391	Lock and Dam 5a	Buffalo Co.,WI and Winona Co., MN	Near town of Fountain City, WI.
P–13392	Lock and Dam 9	Crawford Co., WI and Allamakee Co., IA.	Near city of Lynxville, WI.
P–13500	Lock and Dam 12	Jackson Co., WI and Jo Daviess Co., IL	Near city of Bellevue, IA.
P–13424	Lock and Dam 13	Whiteside Co., IL and Clinton Co., IA	Near city of Fulton, IL.
P–13809	Lock and Dam 14	Rock Island Co., IL and Scott Co., IA	Near city of Hampton, IL.
P–13649	Lock and Dam 20	Adams Co., IL and Lewis Co., MO	Near the towns of Canto, MO and Meyer, IL.
P–13651	Lock and Dam 22	Pike Co., IL and Ralls Co., MO	Near the town of Saverton, MO.

g. *Filed Pursuant to:* Federal Power Act, 16 U.S.C. 808(b)(1) and 18 CFR 5.5 of the Commission's regulations.

h. *Potential Applicant Contact:* Mark R. Stover, Designated Representative, Vice President of Corporate Affairs, Hydro Green Energy, LLC., 900 Oakmont Lane, Suite 310, Westmont, IL 60559; tel. (877) 556–6566 ext. 711 or email at *mark@hgenergy.com.*

i. *FERC Contact:* Lee Emery at (202) 502–8379; or email at *lee.emery@ferc.gov.*

j. Hydro Green filed its request to use the Traditional Licensing Process on August 23, 2011. Hydro Green provided public notice of its requests on August 17, 18, 20, and 22, 2011. In a letter dated October 21, 2011, the Director of the Division of Hydropower Licensing approved Hydro Green's request to use the Traditional Licensing Process for all seven projects.

k. With this notice, we are initiating informal consultation with: (a) The U.S. Fish and Wildlife Service and/or NOAA Fisheries under section 7 of the Endangered Species Act and the joint agency regulations thereunder at 50 CFR, part 402; (b) NOAA Fisheries under section 305(b) of the Magnuson-Stevens Fishery Conservation and Management Act and implementing regulations at 50 CFR 600.920; and (c) the Minnesota, Wisconsin, Illinois, Missouri, and Iowa State Historic Preservation Officer, as required by section 106, National Historical Preservation Act, and the implementing regulations of the Advisory Council on Historic Preservation at 36 CFR 800.2.

l. With this notice, we are designating Hydro Green as the Commission's non-federal representative for carrying out informal consultation, pursuant to section 7 of the Endangered Species Act, section 305 of the Magnuson-Stevens Fishery Conservation and Management

Act, and section 106 of the National Historic Preservation Act.

m. Hydro Green filed Pre-Application Documents (PAD) for each proposed project, including a proposed process plan and schedule with the Commission, pursuant to 18 CFR 5.6 of the Commission's regulations.

n. A copy of the PAD is available for review at the Commission in the Public Reference Room or may be viewed on the Commission's Web site (*http://www.ferc.gov*), using the ''eLibrary'' link. Enter the docket number, excluding the last three digits in the docket number field to access the document. For assistance, contact FERC Online Support at *FERCOnlineSupport@ferc.gov* or toll free at 1–(866) 208–3676, or for TTY, (202) 502–8659. A copy is also available for inspection and reproduction at the address in paragraph h.

o. Register online at *http://www.ferc.gov/docs-filing/esubscription.asp* to be notified via email of new filing and issuances related to this or other pending projects. For assistance, contact FERC Online Support.

Dated: October 21, 2011.

Kimberly D. Bose,

Secretary.

[FR Doc. 2011–27835 Filed 10–26–11; 8:45 am]

BILLING CODE 6717–01–P

DEPARTMENT OF ENERGY

Federal Energy Regulatory Commission

[Project No. 9842–004]

Notice of Intent To File License Application, Filing of Pre-Application Document, and Approving Use of the Traditional Licensing Process/Alternative Licensing Procedures; Raymond F. Ward

a. *Type of Filing:* Notice of Intent to File License Application and Request to Use the Traditional Licensing Process Procedures.

b. *Project No.:* 9842–004.

c. *Date Filed:* August 31, 2011.

d. *Submitted By:* Raymond F. Ward.

e. *Name of Project:* Ward Mill Dam Project.

f. *Location:* On the Watauga River, in Watauga County, North Carolina. The project does not occupy any federal lands.

g. *Filed Pursuant to:* 18 CFR 5.3 of the Commission's regulations.

h. *Applicant Contact:* Andrew C. Givens, Cardinal Energy service, Inc., 620 N. West St., Suite 103, Raleigh, NC 27603; (919) 834–0909; email—*acgivens@cardinalenergy.com.*

i. *FERC Contact:* Michael Spencer at (202) 502–6093; or email at *michael.spencer@ferc.gov.*

j. Raymond F. Ward filed his request to use the Traditional Licensing Process Procedures on August 31, 2011. Raymond F. Ward provided proof of the public notice of its request on October 6, 2011. In a letter dated October 21, 2011, the Director of the Division of Hydropower Licensing approved Raymond F. Ward's request to use the Traditional Licensing Process.

k. *With this notice, we are initiating informal consultation with:* (a) The U.S. Fish and Wildlife Service under section 7 of the Endangered Species Act and the joint agency regulations thereunder at 50 CFR Part 402; (b) NOAA Fisheries under section 305(b) of the Magnuson-Stevens Fishery Conservation and Management Act and implementing regulations at 50 CFR 600.920; and (c) the North Carolina State Historic Preservation Officer, as required by section 106, National Historical Preservation Act, and the implementing regulations of the Advisory Council on Historic Preservation at 36 CFR 800.2.

l. Raymond F. Ward filed a Pre-Application Document (PAD; including a proposed process plan and schedule) with the Commission, pursuant to 18 CFR 5.6 of the Commission's regulations.

m. A copy of the PAD is available for review at the Commission in the Public Reference Room or may be viewed on the Commission's Web site (*http://www.ferc.gov*), using the ''eLibrary'' link. Enter the docket number, excluding the last three digits in the docket number field to access the document. For assistance, contact FERC Online Support at *FERCOnlineSupport@ferc.gov* or toll free at 1–866–208–3676, or for TTY, (202) 502–8659. A copy is also available for inspection and reproduction at the address in paragraph h.

n. The licensee states its unequivocal intent to submit an application for a new license for Project No. 9842. Pursuant to 18 CFR 16.8, 16.9, and 16.10, each application for a new license and any competing license applications must be filed with the Commission at least 24 months prior to the expiration of the existing license. All applications for license for this project must be filed by August 31, 2014.

o. Register online at *http://www.ferc.gov/docs-filing/esubscription.asp* to be notified via email of new filing and issuances related to this or other pending projects. For assistance, contact FERC Online Support.

Dated: October 21, 2011.

Kimberly D. Bose,

Secretary.

[FR Doc. 2011–27832 Filed 10–26–11; 8:45 am]

BILLING CODE 6717–01–P

DEPARTMENT OF ENERGY

Federal Energy Regulatory Commission

[Project No. 13234–002]

City and Borough of Sitka, AK; Notice of Preliminary Permit Application Accepted for Filing and Soliciting Comments, Motions To Intervene, and Competing Applications

On September 1, 2011, and supplemented on October 17, 2011, the City and Borough of Sitka filed an application for a preliminary permit, pursuant to section 4(f) of the Federal Power Act (FPA), proposing to study the feasibility of the Takatz Lake Hydroelectric Project (Takatz Lake Project) to be located on Takatz Lake and Takatz Creek, about 21 miles east of the city of Sitka, Alaska, on the east side of Baranof Island. The sole purpose of a preliminary permit is to grant the permit holder priority to file a license application during the permit term. A preliminary permit does not authorize the permit holder to perform any land-disturbing activities or otherwise enter upon lands or waters owned by others without the owners' express permission.

The proposed Takatz Lake Project would consist of the following new facilities: (1) A 200-foot-high by 250-foot-long primary concrete dam that would raise the elevation of the existing lake; (2) a 63-foot-high by 100-foot-long secondary saddle dam; (3) an impoundment with a 740-acre surface area at a full pool elevation of 1,040 feet above mean sea level, with an active capacity of 82,400 acre feet; (4) a 2,800-foot-long, 6.5-foot by 7-foot horseshoe-tunnel power conduit fed by a concrete intake structure or lake tap; (5) a 72-inch-diameter 1,000-foot-long steel penstock; (6) a 120-foot-long by 80-foot-wide powerhouse containing two Francis-type generation units having a total installed capacity of 27.7 megawatts; (7) a 100-foot-long by 70-foot-wide switchyard; (8) an about 26-mile-long, 138-kilovolt transmission line that consists of underground and overhead segments, including an alternative for a submarine segment; (9) an about 3-mile-long access road; and (10) appurtenant facilities. The

estimated annual generation output for the project would be 106.9 gigawatt-hours.

Applicant Contact: Mr. Christopher Brewton, Utility Director, Electric Department, City and Borough of Sitka, Alaska, 105 Jarvis Street, Sitka, AK 99835; Phone (907) 747–1870.

FERC Contact: Joseph Adamson; Phone: (202) 502–8085.

Deadline for filing comments, motions to intervene, competing applications (without notices of intent), or notices of intent to file competing applications: 60 days from the issuance of this notice. Competing applications and notices of intent must meet the requirements of 18 CFR 4.36. Comments, motions to intervene, notices of intent, and competing applications may be filed electronically via the Internet. See 18 CFR 385.2001(a)(1)(iii) and the instructions on the Commission's Web site *http://www.ferc.gov/docs-filing/efiling.asp.* Commenters can submit brief comments up to 6,000 characters, without prior registration, using the eComment system at *http://www.ferc.gov/docs-filing/ecomment.asp.* You must include your name and contact information at the end of your comments. For assistance, please contact FERC Online Support at *FERCOnlineSupport@ferc.gov* or toll free at 1–(866) 208–3676, or for TTY, (202) 502–8659. Although the Commission strongly encourages electronic filing, documents may also be paper-filed. To paper-file, mail an original and seven copies to: Kimberly D. Bose, Secretary, Federal Energy Regulatory Commission, 888 First Street, NE., Washington, DC 20426.

More information about this project, including a copy of the application, can be viewed or printed on the ''eLibrary'' link of the Commission's Web site at *http://www.ferc.gov/docs-filing/elibrary.asp.* Enter the docket number (P–13234) in the docket number field to access the document. For assistance, contact FERC Online Support.

Dated: October 21, 2011.

Kimberly D. Bose,

Secretary.

[FR Doc. 2011–27834 Filed 10–26–11; 8:45 am]

BILLING CODE 6717–01–P

DEPARTMENT OF ENERGY

Federal Energy Regulatory Commission

[Project No. 14295–000]

Notice of Preliminary Permit Application Accepted for Filing and Soliciting Comments, Motions To Intervene, and Competing Applications; Public Utility District No. 1 of Snohomish County, WA

On September 28, 2011, Public Utility District No. 1 of Snohomish County filed an application for a preliminary permit, pursuant to section 4(f) of the Federal Power Act (FPA), proposing to study the feasibility of the Sunset Falls Hydroelectric Project to be located on the South Fork Skykomish River near Index in Snohomish County, Washington. The sole purpose of a preliminary permit, if issued, is to grant the permit holder priority to file a license application during the permit term. A preliminary permit does not authorize the permit holder to perform any land-disturbing activities or otherwise enter upon lands or waters owned by others without the owner's express permission.

The proposed project will consist of the construction of the following: (1) A 140-foot-wide, 45-foot-high v-screen intake; (2) a 2,000-foot-long, 19-foot-diameter unlined rock penstock; (3) a semi-underground powerhouse with twin 15-megawatt turbines; (4) an 8.5-mile long, 115-kilovolt three-phase overhead transmission line extending from the powerhouse to an existing substation. The estimated annual generation of the Sunset Falls Hydroelectric Project would be 120 gigawatt-hours.

Applicant Contact: Mr. Kim D. Moore, Assistant General Manager, Public Utility District No.1 of Snohomish County; 2320 California Street, PO Box 1107, Everett, WA 98201; phone: (425) 783–8606.

FERC Contact: Ian Smith; phone: (202) 502–8943.

Deadline for filing comments, motions to intervene, competing applications (without notices of intent), or notices of intent to file competing applications: 60 days from the issuance of this notice. Competing applications and notices of intent must meet the requirements of 18 CFR 4.36. Comments, motions to intervene, notices of intent, and competing applications may be filed electronically via the Internet. See 18 CFR 385.2001(a)(1)(iii) and the instructions on the Commission's Web site *http://www.ferc.gov/docs-filing/efiling.asp.* Commenters can submit brief comments up to 6,000 characters, without prior registration, using the eComment system at *http://www.ferc.gov/docs-filing/ecomment.asp.* You must include your name and contact information at the end of your comments. For assistance, please contact FERC Online Support at *FERCOnlineSupport@ferc.gov* or toll free at 1-(866) 208–3676, or for TTY, (202) 502–8659. Although the Commission strongly encourages electronic filing, documents may also be paper-filed. To paper-file, mail an original and seven copies to: Kimberly D. Bose, Secretary, Federal Energy Regulatory Commission, 888 First Street, NE., Washington, DC 20426.

More information about this project, including a copy of the application, can be viewed or printed on the ''eLibrary'' link of Commission's Web site at *http://www.ferc.gov/docs-filing/elibrary.asp.* Enter the docket number (P–14295–000) in the docket number field to access the document. For assistance, contact FERC Online Support.

Dated: October 21, 2011.

Kimberly D. Bose,

Secretary.

[FR Doc. 2011–27836 Filed 10–26–11; 8:45 am]

BILLING CODE 6717–01–P

ENVIRONMENTAL PROTECTION AGENCY

[EPA–HQ–OARM–2011–0748; FRL–9483–6]

Agency Information Collection Activities; Proposed Collection; Comment Request; Monthly Progress Reports; Submission of Invoices, and Related Information (Renewal)

AGENCY: Environmental Protection Agency (EPA).

ACTION: Notice.

SUMMARY: In compliance with the Paperwork Reduction Act (PRA) (44 U.S.C. 3501 *et seq.*), this document announces that EPA is planning to submit a request to renew an existing approved Information Collection Request (ICR) to the Office of Management and Budget (OMB). This ICR is scheduled to expire on April 30, 2012. Before submitting the ICR to OMB for review and approval, EPA is soliciting comments on specific aspects of the proposed information collection as described below.

DATES: Comments must be submitted on or before December 27, 2011.

ADDRESSES: Submit your comments, identified by Docket ID No. EPA–HQ–

OARM–2011–0748, by one of the following methods:

- *http://www.regulations.gov:* Follow the on-line instructions for submitting comments.
- *Email: valentino.thomas@epa.gov*
- *Mail:* EPA–HQ–OARM–2011–0748, OEI Docket, Environmental Protection Agency, *Mailcode:* 2822T, 1200 Pennsylvania Ave. NW., Washington, DC 20460. Please include a total of three (3) copies.
- *Hand Delivery:* EPA Docket Center-Attention OEI Docket, EPA West, Room B102, 1301 Constitution Ave. NW., Washington DC 20004 Such deliveries are only accepted during the Docket's normal hours of operation, and special arrangements should be made for deliveries of boxed information.

Instructions: Direct your comments to Docket ID No. EPA–HQ–OARM–2011–0748 EPA's policy is that all comments received will be included in the public docket without change and may be made available online at *http://www.regulations.gov,* including any personal information provided, unless the comment includes information claimed to be Confidential Business Information (CBI) or other information whose disclosure is restricted by statute. Do not submit information that you consider to be CBI or otherwise protected through *http://www.regulations.gov* or email. The *http://www.regulations.gov* Web site is an ''anonymous access'' system, which means EPA will not know your identity or contact information unless you provide it in the body of your comment. If you send an email comment directly to EPA without going through *http://www.regulations.gov* your email address will be automatically captured and included as part of the comment that is placed in the public docket and made available on the Internet. If you submit an electronic comment, EPA recommends that you include your name and other contact information in the body of your comment and with any disk or CD–ROM you submit. If EPA cannot read your comment due to technical difficulties and cannot contact you for clarification, EPA may not be able to consider your comment. Electronic files should avoid the use of special characters, any form of encryption, and be free of any defects or viruses. For additional information about EPA's public docket visit the EPA Docket Center homepage at *http://www.epa.gov/epahome/dockets.htm.*

FOR FURTHER INFORMATION CONTACT:

Thomas Valentino, PTOD, OAM (3802R), Environmental Protection Agency, 1200 Pennsylvania Ave. NW., Washington, DC 20460; *telephone number:* 202–564–4522; *email address: valentino.thomas@epa.gov.*

SUPPLEMENTARY INFORMATION:

How can I access the docket and/or submit comments?

EPA has established a public docket for this ICR under Docket ID No. EPA–HQ–OARM–2011–0748, which is available for online viewing at *http://www.regulations.gov,* or in person viewing at the OEI Docket in the EPA Docket Center (EPA/DC), EPA West, Room 3334, 1301 Constitution Ave. NW., Washington, DC. The EPA/DC Public Reading Room is open from 8:30 a.m. to 4:30 p.m., Monday through Friday, excluding legal holidays. The telephone number for the Reading Room is 202–566–1744, and the telephone number for the OEI Docket is 202–566–1752.

Use *http://www.regulations.gov* to obtain a copy of the draft collection of information, submit or view public comments, access the index listing of the contents of the docket, and to access those documents in the public docket that are available electronically. Once in the system, select ''search,'' then key in the docket ID number identified in this document.

What information is EPA particularly interested in?

Pursuant to section 3506(c)(2)(A) of the PRA, EPA specifically solicits comments and information to enable it to:

(i) Evaluate whether the proposed collection of information is necessary for the proper performance of the functions of the Agency, including whether the information will have practical utility;

(ii) evaluate the accuracy of the Agency's estimate of the burden of the proposed collection of information, including the validity of the methodology and assumptions used;

(iii) enhance the quality, utility, and clarity of the information to be collected; and

(iv) minimize the burden of the collection of information on those who are to respond, including through the use of appropriate automated electronic, mechanical, or other technological collection techniques or other forms of information technology, e.g., permitting electronic submission of responses. In particular, EPA is requesting comments from very small businesses (those that employ less than 25) on examples of specific additional efforts that EPA could make to reduce the paperwork burden for very small businesses affected by this collection.

What should I consider when I prepare my comments for EPA?

You may find the following suggestions helpful for preparing your comments:

1. Explain your views as clearly as possible and provide specific examples.
2. Describe any assumptions that you used.
3. Provide copies of any technical information and/or data you used that support your views.
4. If you estimate potential burden or costs, explain how you arrived at the estimate that you provide.
5. Offer alternative ways to improve the collection activity.
6. Make sure to submit your comments by the deadline identified under **DATES**.
7. To ensure proper receipt by EPA, be sure to identify the docket ID number assigned to this action in the subject line on the first page of your response. You may also provide the name, date, and **Federal Register** citation.

What information collection activity or ICR does this apply to?

Docket ID No. EPA–HQ–OARM–2011–0748

Affected entities: Entities potentially affected by this action are businesses and organizations performing contracts for the EPA where submission of monthly progress reports, invoices and related information is required.

Title: Monthly Progress Reports. Submission of Invoices, and Related Information (Renewal)

ICR numbers: EPA ICR No. 1039.13, OMB Control No. 2030–0005.

ICR status: This ICR is currently scheduled to expire on April 30, 2012. An Agency may not conduct or sponsor, and a person is not required to respond to, a collection of information, unless it displays a currently valid OMB control number. The OMB control numbers for EPA's regulations in title 40 of the CFR, after appearing in the **Federal Register** when approved, are listed in 40 CFR part 9, are displayed either by publication in the **Federal Register** or by other appropriate means, such as on the related collection instrument or form, if applicable. The display of OMB control numbers in certain EPA regulations is consolidated in 40 CFR part 9.

Abstract: Appropriate Government surveillance of contractor performance is required to give reasonable assurance that efficient methods and effective cost controls are being used for various cost reimbursable and fixed rate contracts. On a monthly basis, the Agency requires contractors to provide the project officer

with a report detailing (a) what was accomplished on the contract during that period, (b) what remains to be done, and (c) expenditures for the same period of time. Responses to the information collection are mandatory for contractors and are required for the contractors to receive monthly payments.

Burden Statement: The annual public reporting and recordkeeping burden for this collection of information is estimated to average 25 hours per response. Burden means the total time, effort, or financial resources expended by persons to generate, maintain, retain, or disclose or provide information to or for a Federal agency. This includes the time needed to review instructions; develop, acquire, install, and utilize technology and systems for the purposes of collecting, validating, and verifying information, processing and maintaining information, and disclosing and providing information; adjust the existing ways to comply with any previously applicable instructions and requirements which have subsequently changed; train personnel to be able to respond to a collection of information; search data sources; complete and review the collection of information; and transmit or otherwise disclose the information.

EPA estimates that each contractor monthly response will take approximately 25 hours. EPA anticipates approximately 203 total active contracts will be affected, multiplied by 12 submissions per year equals 2,436 submissions per year. Each collection is estimated to cost $2,213 based on contractor personnel performing individual tasks required for information gathering and submission. The anticipated 2,436 submissions per year are estimated at 60,900 total hours and $5,391,258 annual cost.

Are there changes in the estimates from the last approval?

There is a decrease of 4,872 hours in the total estimated respondent burden compared with that identified in the ICR currently approved by, due mainly to improved tracking software and increasing familiarity with EPA reporting requirements.

What is the next step in the process for this ICR?

EPA will consider the comments received and amend the ICR as appropriate. The final ICR package will then be submitted to OMB for review and approval pursuant to 5 CFR 1320.12. At that time, EPA will issue another Federal Register notice pursuant to 5 CFR 1320.5(a)(1)(iv) to announce the submission of the ICR to OMB and the opportunity to submit additional comments to OMB. If you have any questions about this ICR or the approval process, please contact the technical person listed under **FOR FURTHER INFORMATION CONTACT**.

Dated: October 19, 2011.

John R. Bashista,

Director, Office of Acquisition Management.

[FR Doc. 2011–27809 Filed 10–26–11; 8:45 am]

BILLING CODE 6560–50–P

ENVIRONMENTAL PROTECTION AGENCY

[FRL–9483–9]

Notification of a Public Teleconference of the Clean Air Scientific Advisory Committee Air Monitoring and Methods Subcommittee

AGENCY: Environmental Protection Agency (EPA).

ACTION: Notice.

SUMMARY: The Environmental Protection Agency (EPA or Agency) Science Advisory Board (SAB) Staff Office announces a public teleconference of the Clean Air Scientific Advisory Committee (CASAC) Air Monitoring and Methods Subcommittee (AMMS) to discuss its draft report on EPA's draft Near-Road NO_2 Monitoring Technical Assistance Document.

DATES: A public teleconference will be held on Thursday, November 17, 2011, from 12:30 p.m. to 4:30 p.m. (Eastern Time).

ADDRESSES: The public teleconference will be conducted by telephone only.

FOR FURTHER INFORMATION CONTACT: Any member of the public wishing further information regarding this Notice and public teleconference may contact Mr. Edward Hanlon, Designated Federal Officer (DFO), SAB Staff Office, by telephone/voice mail at (202) 564–2134; by fax at (202) 565–2098 or via email at *hanlon.edward@epa.gov.* General information concerning the EPA CASAC can be found at the EPA CASAC Web site at *http://www.epa.gov/casac.* Any inquiry regarding EPA's draft Near-Road NO_2 Monitoring Technical Assistance Document should be directed to Mr. Nealson Watkins, EPA Office of Air Quality Planning and Standards (OAQPS), at *watkins.nealson@epa.gov* or (919) 541–5522.

SUPPLEMENTARY INFORMATION:

Background: The CASAC was established pursuant to the under the Clean Air Act (CAA) Amendments of 1977, codified at 42 U.S.C. 7409D(d)(2), to provide advice, information, and recommendations to the Administrator on the scientific and technical aspects of issues related to the criteria for air quality standards, research related to air quality, sources of air pollution, and the strategies to attain and maintain air quality standards and to prevent significant deterioration of air quality. CASAC is a Federal Advisory Committee chartered under the Federal Advisory Committee Act (FACA), 5 U.S.C., App. 2. Pursuant to FACA and EPA policy, notice is hereby given that the CASAC AMMS will hold a public teleconference to discuss the Subcommittee's draft Near-Road NO_2 Monitoring Technical Assistance Document.

In February 2010, EPA promulgated new minimum monitoring requirements for the nitrogen dioxide (NO_2) monitoring network in support of a newly revised National Ambient Air Quality Standard (NAAQS) for 1-hour NO_2. In the new monitoring requirements, state and local air monitoring agencies are required to install near-road NO_2 monitoring stations in larger urban areas. In August 2010, EPA's Office of Air and Radiation (OAR) requested that CASAC review the initial phase of EPA's Near Road project, and CASAC issued a final report to the EPA Administrator in November 2010 entitled ''Review of the 'Near-road Guidance Document—Outline' and 'Near-road Monitoring Pilot Study Objectives and Approach' '' (EPA–CASAC–11–001). OAR considered CASAC's recommendations and drafted a technical document entitled ''Near-Road NO_2 Monitoring Technical Assistance Document—DRAFT August 11, 2011'' to provide guidance to state and local air monitoring agencies on how to successfully implement near-road NO_2 monitors. OAR requested CASAC advice on how to improve this draft guidance, and on September 29, 2011 AMMS held a public teleconference call to discuss review comments on EPA's draft document. Materials from this September 29, 2011 teleconference call are posted on the CASAC Web site at *http://yosemite.epa.gov/sab/sabproduct.nsf/bf498bd32a1c7fdf85257242006dd6cb/07f0cde2113f6c26852578f5006a7581!OpenDocument&Date=2011-09-29.* The purpose of the November 17, 2011 teleconference call is for the CASAC Panel to discuss its draft review report that was developed based on consensus views reached during the September 29, 2011 teleconference call.

Availability of Meeting Materials: The agenda and materials in support of this teleconference call will be placed on the EPA CASAC Web site at *http://*

www.epa.gov/casac in advance of the teleconference call.

Procedures for Providing Public Input: Public comment for consideration by EPA's federal advisory committees and panels has a different purpose from public comment provided to EPA program offices. Therefore, the process for submitting comments to a federal advisory committee is different from the process used to submit comments to an EPA program office. Federal advisory committees and panels, including scientific advisory committees, provide independent advice to EPA. Members of the public can submit relevant comments for a federal advisory committee to consider pertaining to EPA's charge to the panel, EPA review or background documents, or this advisory activity. Input from the public to the SAB will have the most impact if it consists of comments that provide specific scientific or technical information or analysis for the SAB panel to consider or if it relates to the clarity or accuracy of the technical information. Members of the public wishing to provide comment should contact the Designated Federal Officer for the relevant advisory committee directly. *Oral Statements:* In general, individuals or groups requesting an oral presentation at this public teleconference will be limited to three minutes per speaker. Interested parties should contact Mr. Edward Hanlon, DFO, in writing (preferably via email), at the contact information noted above, by November 10, 2011 to be placed on the list of public speakers for the teleconference. *Written Statements:* Written statements should be received in the SAB Staff Office by November 10, 2011 so that the information may be made available to the CASAC AMMS for their consideration. Written statements should be supplied to the DFO in the following formats: one hard copy with original signature, and one electronic copy via email (acceptable file format: Adobe Acrobat PDF, WordPerfect, MS Word, MS PowerPoint, or Rich Text files in IBM-PC/Windows 98/2000/XP format). Submitters are requested to provide two versions of each document submitted with and without signatures, because the SAB Staff Office does not publish documents with signatures on its Web sites.

Accessibility: For information on access or services for individuals with disabilities, please contact Mr. Edward Hanlon at the phone number or email address noted above, preferably at least ten days prior to the teleconference call, to give EPA as much time as possible to process your request.

Dated: October 20, 2011.

Vanessa T. Vu,

Director, EPA Science Advisory Board Staff Office.

[FR Doc. 2011–27808 Filed 10–26–11; 8:45 am]

BILLING CODE 6560–50–P

ENVIRONMENTAL PROTECTION AGENCY

[FRL–9483–7]

Clean Air Act Advisory Committee (CAAAC): Notice of Meeting

AGENCY: Environmental Protection Agency.

ACTION: Notice of meeting.

SUMMARY: The Environmental Protection Agency (EPA) established the Clean Air Act Advisory Committee (CAAAC) on November 19, 1990, to provide independent advice and counsel to EPA on policy issues associated with implementation of the Clean Air Act of 1990. The Committee advises on economic, environmental, technical, scientific and enforcement policy issues.

DATES AND ADDRESSES: Open meeting notice; Pursuant to 5 U.S.C. App. 2 Section 10(a)(2), notice is hereby given that the Clean Air Act Advisory Committee will hold its next open meeting on November 17, 2011 from 8 a.m. to 3:45 p.m. at the Crown Plaza Old Town Alexandria Hotel located at 901 North Fairfax, Alexandria, VA. Seating will be available on a first come, first served basis. The Permits, New Source Review and Toxics Subcommittee and the Multi-Pollutant Sector workgroup will meet at the same location on November 16, 2011 from 10 a.m. to 3:30 p.m. The Mobile Source Technical Review subcommittee met on Thursday, October 6, 2011 and will report out at the full committee meeting. The agenda for the CAAAC full committee meeting on November 17, 2011 will be posted on the Clean Air Act Advisory Committee Web site at *http://www.epa.gov/oar/caaac/.*

Inspection of Committee Documents: The Committee agenda and any documents prepared for the meeting will be publicly available at the meeting. Thereafter, these documents, together with CAAAC meeting minutes, will be available by contacting the Office of Air and Radiation Docket and requesting information under docket EPA–HQ–OAR–2004–0075. The Docket office can be reached by email at: *a-and-r-Docket@epa.gov* or FAX: (202) 566–9744.

FOR FURTHER INFORMATION CONTACT: Concerning the CAAAC, please contact Pat Childers, Office of Air and Radiation, U.S. EPA (202) 564–1082, FAX (202) 564–1352 or by mail at U.S. EPA, Office of Air and Radiation (Mail code 6102 A), 1200 Pennsylvania Avenue, NW., Washington, DC 20004. For information on the Permits, New Source Review and Toxics subcommittee, please contact Liz Naess at (919) 541–1892. For information on the Mobile Source Technical Review subcommittee please contact Elizabeth Etchells at (202) 564–1372. Additional Information on these meetings, CAAAC, and its Subcommittees can be found on the CAAAC Web site: *http://www.epa.gov/oar/caaac/.*

For information on access or services for individuals with disabilities, please contact Mr. Pat Childers at (202) 564–1082 or *childers.pat@epa.gov.* To request accommodation of a disability, please contact Mr. Childers, preferably at least 10 days prior to the meeting, to give EPA as much time as possible to process your request.

Dated: October 17, 2011.

Pat Childers,

Designated Federal Official, Clean Air Act Advisory Committee, Office of Air and Radiation.

[FR Doc. 2011–27811 Filed 10–26–11; 8:45 am]

BILLING CODE 6560–50–P

FEDERAL ELECTION COMMISSION

Sunshine Act Notice

AGENCY: Federal Election Commission.

DATE AND TIME: Tuesday November 1, 2011 at 10 a.m.

PLACE: 999 E Street NW., Washington, DC.

STATUS: This Meeting will be Closed to the Public.

ITEMS TO BE DISCUSSED:

Compliance matters pursuant to 2 U.S.C. 437g.

Audits conducted pursuant to 2 U.S.C. 437g, 438(b), and Title 26, U.S.C.

Matters concerning participation in civil actions or proceedings or arbitration.

Internal personnel rules and procedures or matters affecting a particular employee.

* * * * *

PERSON TO CONTACT FOR INFORMATION: Judith Ingram, Press Officer, Telephone: (202) 694–1220.

Shelley E. Garr,

Deputy Secretary of the Commission.

[FR Doc. 2011–27993 Filed 10–25–11; 4:15 p.m.]

BILLING CODE 6715–01–P

FEDERAL RESERVE SYSTEM

Change in Bank Control Notices; Acquisitions of Shares of a Bank or Bank Holding Company

The notificants listed below have applied under the Change in Bank Control Act (12 U.S.C. 1817(j)) and § 225.41 of the Board's Regulation Y (12 CFR 225.41) to acquire shares of a bank or bank holding company. The factors that are considered in acting on the notices are set forth in paragraph 7 of the Act (12 U.S.C. 1817(j)(7)).

The notices are available for immediate inspection at the Federal Reserve Bank indicated. The notices also will be available for inspection at the offices of the Board of Governors. Interested persons may express their views in writing to the Reserve Bank indicated for that notice or to the offices of the Board of Governors. Comments must be received not later than November 14, 2011.

A. Federal Reserve Bank of Atlanta (Chapelle Davis, Assistant Vice President) 1000 Peachtree Street, NE., Atlanta, Georgia 30309:

1. *Guido Edwin Hinojosa Cardoso,* La Paz, Bolivia; to acquire additional voting shares of Sunrise Bank, Cocoa Beach, Florida.

B. Federal Reserve Bank of Dallas (E. Ann Worthy, Vice President) 2200 North Pearl Street, Dallas, Texas 75201–2272:

1. *Jerry D. Branum,* Dallas, Texas; to acquire voting shares of Wills Point Financial Corporation, and thereby indirectly acquire voting shares of Citizens National Bank, both in Wills Point, Texas.

Board of Governors of the Federal Reserve System, October 24, 2011.

Robert deV. Frierson,

Deputy Secretary of the Board.

[FR Doc. 2011–27802 Filed 10–26–11; 8:45 am]

BILLING CODE 6210–01–P

FEDERAL RESERVE SYSTEM

Formations of, Acquisitions by, and Mergers of Bank Holding Companies

The companies listed in this notice have applied to the Board for approval, pursuant to the Bank Holding Company Act of 1956 (12 U.S.C. 1841 *et seq.*) (BHC Act), Regulation Y (12 CFR Part 225), and all other applicable statutes and regulations to become a bank holding company and/or to acquire the assets or the ownership of, control of, or the power to vote shares of a bank or bank holding company and all of the banks and nonbanking companies owned by the bank holding company, including the companies listed below.

The applications listed below, as well as other related filings required by the Board, are available for immediate inspection at the Federal Reserve Bank indicated. The application also will be available for inspection at the offices of the Board of Governors. Interested persons may express their views in writing on the standards enumerated in the BHC Act (12 U.S.C. 1842(c)). If the proposal also involves the acquisition of a nonbanking company, the review also includes whether the acquisition of the nonbanking company complies with the standards in section 4 of the BHC Act (12 U.S.C. 1843). Unless otherwise noted, nonbanking activities will be conducted throughout the United States.

Unless otherwise noted, comments regarding each of these applications must be received at the Reserve Bank indicated or the offices of the Board of Governors not later than November 21, 2011.

A. Federal Reserve Bank of Chicago (Colette A. Fried, Assistant Vice President) 230 South LaSalle Street, Chicago, Illinois 60690–1414:

1. *Blue Grass Bancorporation, Inc.,* Corning, Iowa; to become a bank holding company by acquiring 100 percent of the voting shares of Okey-Vernon First National Bank, Corning, Iowa.

In connection with this application, Applicant also has applied to acquire 1st Choice, Corning, Iowa, and thereby engage in insurance activities in a small town of less than 5,000 in population, pursuant to section 225.28(b)(11)(iii)(A) of Regulation Y.

Board of Governors of the Federal Reserve System, October 24, 2011.

Robert deV. Frierson,

Deputy Secretary of the Board.

[FR Doc. 2011–27801 Filed 10–26–11; 8:45 am]

BILLING CODE 6210–01–P

DEPARTMENT OF HEALTH AND HUMAN SERVICES

National Committee on Vital and Health Statistics: Meeting Standards Subcommittee

Pursuant to the Federal Advisory Committee Act, the Department of Health and Human Services (HHS) announces the following advisory committee meeting.

Name: National Committee on Vital and Health Statistics (NCVHS) Standards Subcommittee.

Time and Date: November 17, 2011, 1:30 p.m.–5 p.m. November 18, 2011, 8:15 a.m.–4 p.m.

Place: Holiday Inn Rosslyn at Key Bridge Hotel, 1900 N. Fort Meyer Drive, Arlington, VA 22209, (703) 807–2000, *http://www.hirosslyn.com.*

Status: Open.

Purpose: The purpose of this upcoming meeting of the Subcommittee on Standards is to: (1) Receive industry input on the provisions in Section 10109 of the Affordable Care Act (ACA) that stated that by January 2012, the NCVHS must make recommendations to the Secretary as to (i) whether there could be greater uniformity in financial and administrative activities and items; and (ii) whether such activities should be considered financial and administrative transactions for which the adoption of standards and operating rules would improve the operation of the health care system and reduce administrative costs; (2) begin discussions regarding the standard for electronic claims attachments, another standard that is to be adopted under the Health Insurance Portability and Accountability Act of 1996 (HIPAA) and the Affordable Care Act along with operating rules; and (3) hear commentary and proposals pertaining to the maintenance and modification of standards and operating rules adopted under HIPAA and ACA. The Subcommittee will hear testimony with proposals and recommendations from individual, organizational and association subject matter experts. This meeting will be conducted jointly with members of the HIT Standards and Policy Committees.

The NCVHS has been named in the Patient Protection and Affordable Care Act (ACA) of 2010 to review and make recommendations on several operating rules and standards related to HIPAA transactions. This meeting will support these activities in the development of a set of recommendations for the Secretary, as required by § 1104 of the ACA. Text of the ACA can be found at *http://www.whitehouse.gov/healthreform*

Contact Person for More Information: Substantive program information as well as summaries of meetings and a roster of committee members may be obtained from Lorraine Doo, lead staff for the Standards Subcommittee, NCVHS, Centers for Medicare and Medicaid Services, Office of E-Health Standards and Services, 7500 Security Boulevard, Baltimore, Maryland 21244, telephone (410) 786–6597 or Marjorie S. Greenberg, Executive Secretary, NCVHS, National Center for Health Statistics, Centers for Disease Control and Prevention, 3311 Toledo Road, Room 2402, Hyattsville, Maryland 20782, telephone (301) 458–4245. Information also is available on the NCVHS home page of the HHS Web site: *http://www.ncvhs.hhs.gov/,* where further information including an agenda will be posted when available. Persons interested in providing oral or written testimony during the April 27th hearing should contact Lorraine Doo at *Lorraine.Doo@cms.hhs.gov.*

Should you require reasonable accommodation, please contact the CDC Office of Equal Employment Opportunity on (301) 458–4EEO (4336) as soon as possible.

Dated: October 20, 2011.

James Scanlon,

Deputy Assistant Secretary for Planning and Evaluation, Office of the Assistant Secretary for Planning and Evaluation.

[FR Doc. 2011–27797 Filed 10–26–11; 8:45 am]

BILLING CODE 4151–05–P

DEPARTMENT OF HEALTH AND HUMAN SERVICES

Public Meeting of the Presidential Commission for the Study of Bioethical Issues

AGENCY: Department of Health and Human Services, Office of the Assistant Secretary for Health, Presidential Commission for the Study of Bioethical Issues.

ACTION: Notice of meeting.

SUMMARY: The Presidential Commission for the Study of Bioethical Issues will conduct its seventh meeting in November. At this meeting, the Commission will continue discussing the current Federal standards regarding human subjects protection in scientific studies supported by the Federal government. The Commission will also develop and finalize recommendations regarding actions the Federal government should take to ensure that the health and well-being of participants in scientific studies supported by the Federal government are protected.

DATES: The meeting will take place Wednesday and Thursday, November 16–17, 2011.

ADDRESSES: The Joseph B. Martin Conference Center at Harvard Medical School, 77 Avenue Louis Pasteur, Boston, MA 02115. Phone (617) 432–8990.

FOR FURTHER INFORMATION CONTACT: Hillary Wicai Viers, Communications Director, Presidential Commission for the Study of Bioethical Issues, 1425 New York Avenue, NW., Suite C–100, Washington, DC 20005. *Telephone:* (202) 233–3960. *Email: Hillary.Viers@bioethics.gov.* Additional information may be obtained at *http://www.bioethics.gov.*

SUPPLEMENTARY INFORMATION: Pursuant to the Federal Advisory Committee Act of 1972, Public Law 92–463, 5 U.S.C. app. 2, notice is hereby given of the seventh meeting of the Presidential Commission for the Study of Bioethical Issues (the Commission). The meeting will be held from 9:30 a.m. to approximately 6 p.m. on Wednesday, November 16, 2011, and from 9 a.m. to approximately 12 noon on Thursday, November 17, 2011, in Boston, Massachusetts. The meeting will be open to the public with attendance limited to space available. The meeting will also be webcast at *http://www.bioethics.gov.*

Under authority of Executive Order 13521, dated November 24, 2009, the President established the Commission. The Commission is an advisory panel of the nation's leaders in medicine, science, ethics, religion, law, and engineering. The Commission advises the President on bioethical issues arising from advances in biomedicine and related areas of science and technology. The Commission seeks to identify and promote policies and practices that ensure scientific research, health care delivery, and technological innovation are conducted in a socially and ethically responsible manner.

The main agenda item for the Commission's seventh meeting is to continue discussing the current Federal standards regarding human subjects protection in scientific studies supported by the Federal government. The Commission will also develop and finalize recommendations regarding actions the Federal government should take to ensure that the health and well-being of participants in scientific studies supported by the Federal government are protected.

The draft meeting agenda and other information about PCSBI, including information about access to the webcast, will be available at *http://www.bioethics.gov.*

The Commission welcomes input from anyone wishing to provide public comment on any issue before it. Respectful debate of opposing views and active participation by citizens in public exchange of ideas can enhance decisions that are reached and the overall public understanding of them. The Commission is particularly interested in receiving oral comments during the meeting that are responsive to specific sessions. Written comments will be accepted at the registration desk and comment forms will be provided for members of the public to write down questions for the Commission as they arise. To accommodate as many speakers as possible, the time for each individual to speak may be limited. If the number of individuals wishing to speak is greater than can reasonably be accommodated during the scheduled meeting, the Commission may randomly select comments.

Anyone planning to attend the meeting who needs special assistance, such as sign language interpretation or other reasonable accommodations, should notify Esther Yoo by telephone at (202) 233–3960, or email at *Esther.Yoo@bioethics.gov* in advance of the meeting. The Commission will make every effort to accommodate persons who need special assistance.

Written comments will also be accepted and are especially welcome. Please address written comments by email to *info@bioethics.gov,* or by mail to the following address: Public Commentary, Presidential Commission for the Study of Bioethical Issues, 1425 New York Ave. NW., Suite C–100, Washington, DC 20005. Comments will be publicly available, including any personally identifiable or confidential business information that they contain. Trade secrets should not be submitted.

Dated: October 19, 2011.

Valerie H. Bonham,

Executive Director, Presidential Commission for the Study of Bioethical Issues.

[FR Doc. 2011–27873 Filed 10–26–11; 8:45 am]

BILLING CODE 4154–06–P

DEPARTMENT OF HEALTH AND HUMAN SERVICES

National Committee on Vital and Health Statistics: Meeting

Pursuant to the Federal Advisory Committee Act, the Department of Health and Human Services (HHS) announces the following advisory committee meeting.

Name: National Committee on Vital and Health Statistics (NCVHS), Full Committee Meeting.

Time and Date:
November 16, 2011 9 a.m.–2:45 p.m.
November 17, 2011 10 a.m.–12:30 p.m.

Place: Holiday Inn Rosslyn at Key Bridge Hotel, 1900 N Fort Meyer Drive, Arlington, VA 22209, (703) 522–8864.

Status: Open.

Purpose: At this meeting the Committee will hear presentations and hold discussions on several health data policy topics. On the morning of the first day the Committee will hear updates from the Department, the Center for Medicare and Medicaid Services, and the Office of the National Coordinator. There will also be discussion on items for approval: (1) Population/Privacy Community Health Data Report which includes a plan for an informational Primer; (2) recommendation letter on Electronic Fund Transfer and Remittance Advice; and after lunch (3) the NCVHS Tenth Report to Congress on the Implementation of the Administrative Simplification Provisions of the Health Insurance Portability and Accountability Act (HIPAA) of 1996. Additionally, a briefing will be given on the meaningful use of Electronic Health Records for Population Health.

On the morning of the second day there will be a review of the final action items discussed on the first day the Committee will discuss next steps.

The times shown above are for the full Committee meeting. Subcommittee breakout sessions are scheduled for late in the afternoon on the first day and in the morning prior to the full Committee meeting on the second day. Agendas for these breakout sessions will be posted on the NCVHS Web site (URL below) when available.

Contact Person for more Information: Substantive program information as well as summaries of meetings and a roster of committee members may be obtained from Marjorie S. Greenberg, Executive Secretary, NCVHS, National Center for Health Statistics, Centers for Disease Control and Prevention, 3311 Toledo Road, Room 2402, Hyattsville, Maryland 20782, telephone (301) 458–4245. Information also is available on the NCVHS home page of the HHS Web site: *http://www.ncvhs.hhs.gov/,* where further information including an agenda will be posted when available.

Should you require reasonable accommodation, please contact the CDC Office of Equal Employment Opportunity on (301) 458–4EEO (4336) as soon as possible.

Dated: October 20, 2011.

James Scanlon,

Deputy Assistant Secretary for Science Planning and Evaluation, Office of the Assistant Secretary for Planning and Evaluation.

[FR Doc. 2011–27798 Filed 10–26–11; 8:45 am]

BILLING CODE 4151–05–P

DEPARTMENT OF HEALTH AND HUMAN SERVICES

Centers for Disease Control and Prevention

CDC/HRSA Advisory Committee on HIV and STD Prevention and Treatment

In accordance with section l0(a)(2) of the Federal Advisory Committee Act (Pub. L. 92–463), the Centers for Disease Control and Prevention (CDC) and the Health Resources and Services Administration (HRSA) announce the following committee meeting.

Times and Dates: 8 a.m.–5:30 p.m., November 15, 2011. 8 a.m.–3 p.m., November 16, 2011.

Place: The Legacy Hotel and Meeting Centre, 1775 Rockville Pike, Rockville, Maryland 20852, Telephone: (301) 881–2300.

Status: Open to the public, limited only by the space available. The meeting room will accommodate approximately 100 people.

Purpose: This Committee is charged with advising the Director, CDC and the Administrator, HRSA, regarding activities related to prevention and control of HIV/AIDS and other STDs, the support of health care services to persons living with HIV/AIDS, and education of health professionals and the public about HIV/AIDS and other STDs.

Matters To Be Discussed: Agenda items include: (1) National HIV/AIDS Strategy Implementation Update; (2) CHAC Workgroups Update; (3) Review and Response to the Urgent Threat of Gonorrhea Antimicrobial Resistance; (4) CDC Division of Adolescent School Health Overview; and (5) Recent HIV Prevention Trials Network Studies.

Agenda items are subject to change as priorities dictate.

Contact Person for More Information: Margie Scott-Cseh, CDC, National Center for HIV/AIDS, Viral Hepatitis, STD, and TB Prevention, 1600 Clifton Road, NE., Mailstop E–07, Atlanta, Georgia 30333, Telephone: (404) 639–8317.

The Director, Management Analysis and Services Office, has been delegated the authority to sign **Federal Register** Notices pertaining to announcements of meetings and other committee management activities, for both the Centers for Disease Control and Prevention and the Agency for Toxic Substances and Disease Registry.

Dated: October 20, 2011.

Elaine L. Baker,

Director, Management Analysis and Services Office, Centers for Disease Control and Prevention (CDC).

[FR Doc. 2011–27770 Filed 10–26–11; 8:45 am]

BILLING CODE 4163–18–P

DEPARTMENT OF HEALTH AND HUMAN SERVICES

Administration for Children and Families

New Policies and Procedural Requirements for the Electronic Submission of Discretionary Grant Applications

AGENCY: Division of Grants Policy, Office of Administration, ACF, HHS.

ACTION: Notice of new policies and procedural requirements for the electronic submission of discretionary grant applications.

Overview Information: The Deputy Assistant Secretary for Administration, Administration for Children and Families (ACF), Department of Health and Human Services (HHS), announces new policies and procedural requirements for the electronic submission of discretionary grant applications through the government-wide grants application site, *http://www.Grants.gov* and through *http://www.GrantSolutions.gov;* effective January 1, 2012.

DATES: Submit written or electronic comments on or before December 27, 2011.

ADDRESSES: Submit written or electronic comments concerning this notice to Karen Shields, Grants Policy Specialist, Department of Health and Human Services, Administration for Children and Families, Division of Grants Policy, 370 L'Enfant Promenade, SW., Aerospace Building, 6th Floor East, Washington, DC 20447. *E-mail address:* karen.shields@acf.hhs.gov. Delays may occur in mail delivery to Federal offices; therefore, a copy of comments should be faxed to (202) 205–6400. Comments will be available for inspection by members of the public at the Office of Administration, Division of Grants Policy, 901 D Street, SW., Washington, DC 20447.

SUMMARY: The Administration for Children and Families (ACF), an Operating Division of HHS, announces the opportunity for public comment on its initial transition plan to implement required electronic submission of Federal discretionary grant applications and official grant file documents. In accordance with e-Government initiatives mandated by the Federal Financial Assistance Management Improvement Act of 1999, Public Law 106–107, ACF officially acknowledges that electronically generated and/or stored documents are recognized equivalents of an official paper grant file. Recognizing the equivalency of such documents eliminates duplicative effort and administrative burden for Federal grant applicants, recipients, and the awarding agency, by facilitating the submission and storage of official grant files. The ACF transition plan will begin with the required electronic submission of discretionary grant applications.

ACF has previously afforded applicants and recipients the option of submitting Federal discretionary grant applications in both electronic and paper formats. This notice announces that during the initial transition phase and thereafter, discretionary grant applicants and recipients are now required to submit competing, and non-competing continuation, grant applications electronically. The electronic portals used to support this effort are *http://www.Grants.gov* and *http://www.GrantSolutions.gov.*

Electronic Submission of Discretionary Grant Applications

- Competing Grant Applications—ACF will continue to post synopses of planned discretionary Funding Opportunity Announcements (FOAs) at the HHS Grants Forecast Web site *http://www.hhs.gov/grantsforecast/and* synopses of published FOAs on *http://www.Grants.gov.* Applicants will continue to use *http://www.Grants.gov* for their application submissions for discretionary awards. Full ACF FOAs are published at *http://www.acf.hhs.gov/grants/index.html.*
- Non-Competing Continuation Grant Applications—Guidance will be provided by ACF directly to existing

grantees on the appropriate electronic system that will allow them to submit non-competing continuation applications to either *http://www.Grants.gov* or *http://www.GrantSolutions.gov.*

Universal Identifier (DUNS), CCR Registration, and Registration at *http://www.Grants.gov*.

Applicants that have not already done so should prepare for this transition by first obtaining a Data Universal Numbering System (DUNS) number at *http://fedgov.dnb.com/webform* and then registering with the Central Contractor Registration (CCR) at *http://www.ccr.gov,* a requirement that became mandatory for all applicants, grantees, and first-tier subawardees on October 1, 2010. Submission of electronic applications to *http://www.Grants.gov* by applicants not registered with the CCR will be rejected by that system.

About the Universal Identifier (DUNS Number) and Central Contractor Registration (CCR)

On September 14, 2010, the Office of Management and Budget (OMB) released the final version of a new award term 2 CFR Part 25, *Universal Identifier and Central Contractor Registration* (75 FR 55671). It codified two existing guidance documents relating to registration with the Central Contractor Registry (CCR) and obtaining a Dun & Bradstreet Universal Numbering System (DUNS) number.

The DUNS/CCR award term in 2 CFR Part 25 requires recipients to maintain the currency of their CCR registration, until they submit their final required financial report under an award, or until they receive final payment, whichever is later. CCR registration must be updated annually and is required of all applicants using the *Grants.gov* portal.

About www.Grants.gov

Applicants can immediately start searching the FIND section of *http://www.Grants.gov* for Federal grant opportunities. Applicants can also register at *http://www.Grants.gov* to receive automatic email notifications of new grant opportunities as they are posted. To prepare to use the APPLY function at *http://www.Grants.gov,* ACF strongly recommends that applicants immediately initiate and complete the ''Get Started'' steps to register with *Grants.gov* at *http://www.grants.gov/applicants/get_registered.jsp.* Although the steps can be completed within a few days in many cases, we strongly advise against waiting until a specific funding opportunity is announced before initiating the Grants.gov registration process to avoid unexpected delays that could result in the rejection of your application.

Organizations that are already registered at Grants.gov, please note that accounts that are inactive for one calendar year will be deactivated.

Please Note: Applicant passwords at Grants.gov now expire every 90 days. Registered applicants will receive two email notifications before their passwords expire. There is now an option for applicants to request a system-generated password through an email message. Accounts will lock for 15 minutes if the user provides the wrong password three consecutive times within a five-minute period.

Change in Submission Time for Electronically Submitted Discretionary Grant Applications

With the implementation of electronic submission of discretionary grant applications via Grants.gov, ACF will extend the timeframe for application receipt from 4:30 p.m., E.T., to 11:59 p.m., E.T. Applications received at or after 12 a.m., E.T., of the day following the application due date will be designated as late and will be disqualified from competition. Proof of receipt (date and time stamp) is provided by the Grants.gov system.

The cutoff for receipt of hard copy/paper applications by those applicants that have obtained a waiver (see the Exceptions to the Electronic Submission Requirement and Waivers section of this notice) will remain at 4:30 p.m., E.T.

Exceptions to the Electronic Submission Requirement and Waivers

ACF recognizes that segments of the applicant community may have limited or no Internet access, and/or limited computer capacity, which may prohibit them from uploading large files to the Internet at *http://www.Grants.gov* and/or *http://www.GrantSolutions.gov.* To accommodate such applicants, ACF is instituting a waiver procedure, on a case-by-case basis, that will allow such applicants to submit hard copy, paper grant applications by hand-delivery, applicant courier, overnight/express mail couriers, or other representatives of the applicant.

Applicants will be required to submit a written statement to ACF that the applicant qualifies for a waiver under one of these grounds: Lack of Internet access; or limited computer capacity that prevents the uploading of large files to the Internet. The written statement must be sent to the Grants Management Contact listed in *Section VII.* in all published discretionary FOAs, and must include the FOA Title, Funding Opportunity Number (FON), the listed Catalog of Federal Domestic Assistance (CFDA) number and the reason for which the applicant is requesting a waiver. Waiver requests may be submitted by mail or by email. The request must be received by ACF no later than two weeks before the application due date, that is, 14 calendar days prior to the application due date listed in the FOA, or if the fourteenth calendar day falls on a weekend or Federal holiday, the next Federal business day following the Federal holiday. Complete instructions on the waiver option will appear in all published FOAs announcing the availability of discretionary grants.

Additionally, on a case-by-case basis, ACF will consider requests to accept hard copy, paper submissions of grant applications when circumstances such as natural disasters occur (floods, hurricanes, *etc.*); or when there are widespread disruptions of mail service; or in other rare cases that would prevent electronic submission of the documents.

In all cases, the decision to allow a waiver to accept submission of hard copy, paper applications will rest with the Grants Management Officer listed in *Section VII* of each discretionary FOA and/or Notice of Award (NOA).

Hard copy/paper applications for new awards, submitted by applicants without prior approval of a waiver within the required timeframe, will be considered non-responsive and will be disqualified from competition and objective review. The waiver process will not apply to applications for non-competing continuation grants.

Records Retention

The HHS regulations at 45 CFR 92.42 (State, Local, and Tribal Governments) and 45 CFR 74.53 (Institutions of Higher Education, Hospitals, Other Nonprofit Organizations, and Commercial Organizations) pertaining to the retrieval, retention, disposition and destruction of official grant files remain in effect for electronically submitted documents.

Future Implementation

This guidance represents the initial phase of ACF's transition to required electronic submission of all official grant documents. ACF will continue to communicate transition plans for other documents as they evolve and will provide the applicant and recipient communities, and the general public, with sufficient notice of implementation details. In general, notices will be published in the **Federal Register** at least 60 days before the implementation becomes effective.

FOR FURTHER INFORMATION CONTACT: Karen Shields, Grants Policy Specialist, Department of Health and Human Services, Administration for Children and Families, OA/Division of Grants Policy, 370 L'Enfant Promenade, SW., Aerospace Building, 6th Floor East, Washington, DC 20447. *Email: karen.shields@acf.hhs.gov. Fax:* (202) 205–6400.

Dated: October 21, 2011.

Jason Donaldson,

Deputy Assistant Secretary for Administration, Administration for Children and Families.

[FR Doc. 2011–27878 Filed 10–26–11; 8:45 am]

BILLING CODE 4184–01–P

DEPARTMENT OF HEALTH AND HUMAN SERVICES

Food and Drug Administration

[Docket No. FDA–2011–N–0528]

Food Safety Modernization Act Domestic and Foreign Facility Reinspections, Recall, and Importer Reinspection User Fee Rates for Fiscal Year 2012; Extension of Comment Period

AGENCY: Food and Drug Administration, HHS.

ACTION: Notice; extension of comment period.

SUMMARY: The Food and Drug Administration (FDA) is extending the comment period to November 30, 2011, for the notice entitled, ''Food Safety Modernization Act Domestic and Foreign Facility Reinspections, Recall, and Importer Reinspection User Fee Rates for Fiscal Year 2012'' that appeared in the **Federal Register** of August 1, 2011 (76 FR 45820). In that document, FDA announced the establishment of a docket to obtain comments that would be considered in establishing the fee rates for fiscal year (FY) 2013. In particular, the Agency provided the current FY 2012 fees and requested public comments to the document and intends to consider such comments, as well as experience and additional data gained in implementing these fees in FY 2012, in establishing the fee rates for FY 2013. The Agency is taking this action in response to requests for an extension to allow interested persons additional time to submit comments.

DATES: Submit either electronic or written comments by November 30, 2011.

ADDRESSES: Submit electronic comments to *http://www.regulations.gov.* Submit written comments to the Division of Dockets Management (HFA–305), Food and Drug Administration, 5630 Fishers Lane, rm. 1061, Rockville, MD 20852.

FOR FURTHER INFORMATION CONTACT: Amy Waltrip, 12420 Parklawn Dr., rm. 2012, Rockville, MD 20857, (301) 796–8811, email: *Amy.Waltrip@fda.hhs.gov.*

SUPPLEMENTARY INFORMATION:

I. Background

In the **Federal Register** of August 1, 2011 (76 FR 45820), FDA published a notice with a 90-day comment period to request comments on the establishment of domestic and foreign facility reinspections, non-compliance with recall order, and importer reinspection FY 2012 user fees. The FDA Food Safety Modernization Act provides the Agency with authority under section 743 of the Federal Food, Drug, and Cosmetic Act (21 U.S.C. 379j–31) to assess and collect fees, including those for costs associated with certain domestic and foreign facility reinspections, failure to comply with a recall order, and importer reinspections. The Agency is seeking public comment on the established FY 2012 user fees. In particular, the Agency is seeking public comments intending to consider such comments, as well as experience and additional data gained in implementing these user fees in FY 2012, in establishing the fee rates for FY 2013. The Agency has received a request for an extension of the comment period. The request conveyed concern that the current 90-day comment period does not allow sufficient time to develop a meaningful or thoughtful response to the notice.

FDA has considered the request and is extending the comment period for the notice for 30 days until November 30, 2011. The Agency believes that this extension allows adequate time for interested persons to submit comments.

II. Request for Comments

Interested persons may submit to the Division of Dockets Management (see **ADDRESSES**) either electronic or written comments on this document. It is only necessary to send one set of comments. It is no longer necessary to send two copies of mailed comments. Identify comments with the docket number found in brackets in the heading of this document. Received comments may be seen in the Division of Dockets Management between 9 a.m. and 4 p.m., Monday through Friday.

Dated: October 24, 2011.

Leslie Kux,

Acting Assistant Commissioner for Policy.

[FR Doc. 2011–27845 Filed 10–26–11; 8:45 am]

BILLING CODE 4160–01–P

DEPARTMENT OF HEALTH AND HUMAN SERVICES

National Institutes of Health

Submission for OMB Review; Comment Request: National Institutes of Health Construction Grants

Summary: Under the provisions of Section 3507(a)(1)(D) of the Paperwork Reduction Act of 1995, the National Institutes of Health (NIH) has submitted to the Office of Management and Budget (OMB) a request to review and approve the information collection listed below. This proposed information collection was previously published in the **Federal Register** on August 17, 2011, pages 51042–51043, and allowed 60 days for public comment. No public comments were received. The purpose of this notice is to allow an additional 30 days for public comment. The NIH may not conduct or sponsor, and the respondent is not required to respond to, information that has been extended, revised or implemented on or after October 1, 2008, unless it displays a currently valid OMB control number.

Proposed Collection: Title: National Institutes of Health Construction GrantsB42 CFR part 52b (Final Rule). *Type of Information Collection Request:* Extension of No. 0925–0424, expiration date 8/31/2008. *Need and Use of the Information Collection:* This request is for OMB review and approval of an extension for the information collection and recordkeeping requirements contained in the regulation codified at 42 CFR part 52b. The purpose of the regulation is to govern the awarding and administration of grants awarded by NIH and its components for construction of new buildings and the alteration, renovation, remodeling, improvement, expansion, and repair of existing buildings, including the provision of equipment necessary to make the buildings (or applicable part of the buildings) suitable for the purpose for which it was constructed. In terms of reporting requirements: Section 52b.9(b) of the regulation requires the transferor of a facility which is sold or transferred, or owner of a facility, the use of which has changed, to provide written notice of the sale, transfer or change within 30 days. Section 52b.10(f) requires a grantee to submit an approved copy of the construction

schedule prior to the start of construction. Section 52b.10(g) requires a grantee to provide daily construction logs and monthly status reports upon request at the job site. Section 52b.11(b) requires applicants for a project involving the acquisition of existing facilities to provide the estimated cost of the project, cost of the acquisition of existing facilities, and cost of remodeling, renovating, or altering facilities to serve the purposes for which they are acquired. In terms of recordkeeping requirements: Section 52b.10(g) requires grantees to maintain daily construction logs and monthly status reports at the job site. *Frequency of Response:* On occasion. *Affected Public:* Non-profit organizations and Federal agencies. *Type of respondents:* Grantees. The estimated respondent burden is as follows:

ESTIMATED ANNUAL REPORTING AND RECORDKEEPING BURDEN

	Number of respondents	Frequency of response	Average time per response	Annual hour burden
Reporting:				
Section 52b.9(b)	1	1	.50	.50
Section 2b.10(f)	60	1	1.0	60
Section 2b.10(g)	60	12	1.0	720
Section 2b.11(b)	100	1	1.0	100
Recordkeeping.				
Section 2b.10(g)	60	260	1.0	15,600
Totals	281			16,480.5

The annualized cost to the public, based on an average of 60 active grants in the construction phase, is estimated at: $576,818. There are no Capital Costs to report. There are no operating or Maintenance Costs to report.

Request for Comments: Written comments and/or suggestions from the public and affected agencies should address one or more of the following points: (1) Evaluate whether the proposed collection of information and recordkeeping are necessary for the proper performance of the function of the agency, including whether the information will have practical utility; (2) Evaluate the accuracy of the agency=s estimate of the burden of the proposed collection of information and recordkeeping, including the methodology and assumptions used; (3) Enhance the quality, utility, and clarity of the information to be collected and the recordkeeping information to be maintained; and (4) Minimize the burden of the collection of information on those who are to respond, including the use of appropriate automated, electronic, mechanical, or other technological collection and recordkeeping techniques of other forms of information technology.

Direct Comments to OMB: Written comments and/or suggestions regarding the item(s) contained in this notice, especially regarding the estimated public burden and associated response time, should be directed to the Office of Regulatory Affairs, *OIRA_submission@omb.eop.gov* or by fax to (202) 395–6974, Attention: Desk Officer for NIH. To request more information on the proposed project or to obtain a copy of the data collection plans and instruments, contact Jerry Moore, NIH Regulations Officer, Office of Management Assessment, Division of Management Support, National Institutes of Health, 6011 Executive Boulevard, Room 601, MSC 7669, Rockville Maryland 20852; call (301) 496–4607 (this is not a toll free number) or email your request to *jm40z@nih.gov.*

Comments Due Date: Comments regarding this information collection are best assured of having their full effect if received within 30 days of the date of this publication.

Dated: October 20, 2011.

Jerry Moore,

NIH Regulations Officer, National Institutes of Health.

[FR Doc. 2011–27850 Filed 10–26–11; 8:45 am]

BILLING CODE 4140–01–P

DEPARTMENT OF HEALTH AND HUMAN SERVICES

National Institutes of Health

Submission for OMB Review; Comment Request: New Proposed Collection, Neuropsychosocial Measures Formative Research Methodology Studies for the National Children's Study

Summary: Under the provisions of Section (3507(a)(1)(D)) of the Paperwork Reduction Act of 1995, the National Institutes of Health has submitted to the Office of Management and Budget (OMB) a request to review and approve the information collection listed below. This proposed information collection was previously published in the **Federal Register** on May 2, 2011, pages 24497–24498, and allowed 60 days for public comment. Two written comments and two verbal comments were received. The verbal comments expressed support for the broad scope of the study. The written comments were identical and questioned the cost and utility of the study. The purpose of this notice is to allow an additional 30 days for public comment. The National Institutes of Health may not conduct or sponsor, and the respondent is not required to respond to, an information collection that has been extended, revised, or implemented on or after October 1, 1995, unless it displays a currently valid OMB control number.

Proposed Collection: Title: Neuro-developmental and Psycho-Social Measures Formative Research Studies for the National Children's Study (NCS). *Type of Information Request:* New. *Need and Use of Information Collection:* The Children's Health Act of 2000 (Pub. L. 106–310) states:

(a) *Purpose.*—It is the purpose of this section to authorize the National Institute of Child Health and Human Development* to conduct a national longitudinal study of environmental influences (including physical, chemical, biological, and psychosocial) on children's health and development.

(b) *In General.*—The Director of the National Institute of Child Health and Human Development* shall establish a consortium of representatives from appropriate Federal agencies (including the Centers for Disease Control and Prevention, the Environmental Protection Agency) to—

(1) Plan, develop, and implement a prospective cohort study, from birth to adulthood, to evaluate the effects of both chronic and intermittent exposures on child health and human development; and

(2) investigate basic mechanisms of developmental disorders and environmental factors, both risk and protective, that influence health and developmental processes.

(c) *Requirement.*—The study under subsection (b) shall—

(1) Incorporate behavioral, emotional, educational, and contextual consequences to enable a complete assessment of the physical, chemical, biological, and psychosocial environmental influences on children's well-being;

(2) gather data on environmental influences and outcomes on diverse populations of children, which may include the consideration of prenatal exposures; and

(3) consider health disparities among children, which may include the consideration of prenatal exposures.

To fulfill the requirements of the Children's Health Act, the results of formative research will be used to maximize the efficiency (measured by scientific robustness, participant and infrastructure burden, and cost) of tools to assess language, behavior, and neurodevelopment, psychosocial stress, and health literacy and thereby inform data collection methodologies for the National Children's Study (NCS) Vanguard and Main Studies. With this submission, the NCS seeks to obtain OMB's generic clearance to conduct formative research featuring neuro-developmental and psycho-social measures.

The results from these formative research projects will inform the feasibility (scientific robustness), acceptability (burden to participants and study logistics) and cost of NCS Vanguard and Main Study neuro-developmental and psycho-social measures in a manner that minimizes public information collection burden compared to burden anticipated if these projects were incorporated directly into either the NCS Vanguard or Main Study. Frequency of Response: Annual [As needed on an on-going and concurrent basis]. Affected Public: Members of the public, researchers, practitioners, and other health professionals. *Type of Respondents:* Women of child-bearing age, infants, children, fathers, community leaders, members, and organizations, health care facilities and professionals, public health, environmental, social and cognitive science professional organizations and practitioners, hospital administrators, cultural and faith-based centers, and schools and child care organizations. These include both persons enrolled in the NCS Vanguard Study and their peers who are not participating in the NCS Vanguard Study. *Annual reporting burden:* See Table 1. The annualized cost to respondents is estimated at: $540,000 (based on $10 per hour). There are no Capital Costs to report. There are no Operating or Maintenance Costs to report.

TABLE 1—ESTIMATED ANNUAL REPORTING BURDEN SUMMARY, NEUROPSYCHOSOCIAL MEASURES

Data collection activity	Type of respondent	Estimated number of respondents	Estimated number of responses per respondent	Average burden hours per response	Estimated total annual burden hours requested
Adult Psychosocial Stress	NCS participants	4,000	1	1	4,000
	Members of NCS target population (not NCS participants).	4,000	1	1	4,000
Child Developmental Measures	NCS participants	4,000	1	1	4,000
	Members of NCS target population (not NCS participants).	4,000	1	1	4,000
Health Disparities	NCS participants	4,000	1	1	4,000
	Members of NCS target population (not NCS participants).	4,000	1	1	4,000
Small, focused survey and instrument design and administration.	NCS participants	4,000	2	1	8,000
	Members of NCS target population (not NCS participants).	4,000	2	1	8,000
	Health and Social Service Providers	2,000	1	1	2,000
	Community Stakeholders	2,000	1	1	2,000
Focus groups	NCS participants	2,000	1	1	2,000
	Members of NCS target population (not NCS participants).	2,000	1	1	2,000
	Health and Social Service Providers	2,000	1	1	2,000
	Community Stakeholders	2,000	1	1	2,000
Cognitive interviews	NCS participants	500	1	2	1,000
	Members of NCS target population (not NCS participants).	500	1	2	1,000
Total		45,000			54,000

Request for Comments: Written comments and/or suggestions from the public and affected agencies are invited on one or more of the following points: (1) Whether the proposed collection of information is necessary for the proper performance of the function of the agency, including whether the information will have practical utility; (2) The accuracy of the agency's estimate of the burden of the proposed collection of information, including the validity of the methodology and assumptions used; (3) Ways to enhance the quality, utility, and clarity of the information collected; and (4) Ways to minimize the burden of the collection of information on those who are to respond, including the use of appropriate automated, electronic, mechanical, or other technological collection techniques or other forms of information technology.

Direct Comments to OMB: Written comments and/or suggestions regarding the item(s) contained in this notice, especially regarding the estimated public burden and associated response time, should be directed to Office of Management and Budget, Office of Information and Regulatory Affairs, *Attn:* NIH Desk Officer, by e-mail to

OIRA_submission@omb.eop.gov, or by fax to 202–395–6974. To request more information on the proposed project or to obtain a copy of the data collection plans and instruments, contact Ms. Jamelle E. Banks, Public Health Analyst, Office of Science Policy, Analysis and Communication, National Institute of Child Health and Human Development, 31 Center Drive Room 2A18, Bethesda, Maryland, 20892, or call a non-toll free number (301) 496–1877 or E-mail your request, including your address to *banksj@mail.nih.gov.*

Comments Due Date: Comments regarding this information collection are best assured of having their full effect if received within 30 days of the date of this publication.

Dated: October 20, 2011.

Jamelle E. Banks,

Public Health Analyst, Office of Science Policy, Analysis and Communications, National Institute of Child Health and Human Development, National Institutes of Health.

[FR Doc. 2011–27843 Filed 10–26–11; 8:45 am]

BILLING CODE 4140–01–P

DEPARTMENT OF HEALTH AND HUMAN SERVICES

National Institutes of Health

Government-Owned Inventions; Availability for Licensing

AGENCY: National Institutes of Health, Public Health Service, HHS.

ACTION: Notice.

SUMMARY: The inventions listed below are owned by an agency of the U.S. Government and are available for licensing in the U.S. in accordance with 35 U.S.C. 207 to achieve expeditious commercialization of results of federally-funded research and development. Foreign patent applications are filed on selected inventions to extend market coverage for companies and may also be available for licensing.

ADDRESSES: Licensing information and copies of the U.S. patent applications listed below may be obtained by writing to the indicated licensing contact at the Office of Technology Transfer, National Institutes of Health, 6011 Executive Boulevard, Suite 325, Rockville, Maryland 20852–3804; telephone: (301) 496–7057; fax: (301) 402–0220. A signed Confidential Disclosure Agreement will be required to receive copies of the patent applications.

New Non-HLA–A2 Restricted Human T Cell Receptors (TCRs) That Could Be Used To Treat a Broader Cancer Patient Population Via TCR Adoptive Immunity

Description of Technology: NIH scientists have developed T cell receptors (TCRs) that recognize melanoma antigen family A3 (MAGE–A3) or MAGE–A12 peptide antigens. The TCRs recognize these antigens in the context of major histocompatibility complex (MHC) class I molecules, HLA–A1 and HLA–Cw7, respectively. Since these TCRs are not HLA–A2 restricted, their therapeutic use would expand the number of treatable cancer patients using MAGE–A3 or A12-specific TCR adoptive immunotherapy.

There are twelve MAGE–A superfamily antigens designated A1—A12. Their normal function is not well defined, but in cancer cells they block the functions of tumor suppressor proteins to mediate tumor growth and spreading. The MAGE–A proteins are some of the most widely expressed cancer testis antigens expressed on human tumors. Other than non-MHC expressing germ cells of the testis, normal cells do not express these antigens, which make them ideal targets for cancer immunotherapies anticipated to generate less toxic side effects than conventional cancer treatments. These TCRs deliver a robust immune response against MAGE–A3 or A12 expressing cells and could prove to be a powerful approach for selectively attacking tumors without generating toxicity against healthy cells.

Potential Commercial Applications:

- Personalized immunotherapy for a variety of cancers using human T cells expressing these TCRs
- Component of a combination immunotherapy regimen aimed at targeting specific tumor-associated antigens, including MAGE–A3 and MAGE–A12, expressed by cancer cells.
- A research tool to investigate signaling pathways in MAGE–A3 or MAGE–A12 antigen expressing cancer cells.
- An *in vitro* diagnostic tool to screen for cells expressing MAGE–A3 or MAGE–A12 antigens.

Competitive Advantages:

- Highly expressed targets: MAGE–A proteins (especially MAGE–A3) are some of the most highly expressed cancer testis antigens on human tumors
- Limited side effects: MAGE–A proteins are only expressed on tumor cells and non-MHC expressing testis germ cells. Infused cells expressing these TCRs should target MAGE–A3 or A12 expressing tumor cells with little or no toxicity to the patient's normal cells.
- Not HLA–A2 restricted: Expands patient population treatable with MAGE–A TCRs since they recognize antigen in the context of HLA–A1 or HLA–Cw7.

Development Stage:

- Pre-clinical
- *In vitro* data available

Inventors: Steven A. Rosenberg, Paul F. Robbins, Richard A. Morgan, Steven A. Feldman, and Shiqui Zhu (NCI).

Publication: Chinnasamy N, *et al.* A TCR targeting the HLA–A*0201-restricted epitope of MAGE–A3 recognizes multiple epitopes of the MAGE–A antigen superfamily in several types of cancer. J Immunol. 2011 Jan 15;186(2):685–696. [PMID 21149604].

Intellectual Property: HHS Reference No. E–266–2011/0—U.S. Patent Application No. 61/535,086 filed 15 September 2011.

Related Technology: HHS Reference No. E–236–2010/0—U.S.Patent Application No. 61/405,668 filed 22 October 2010.

Licensing Contact: Samuel E. Bish, Ph.D.; (301) 435–5282; *bishse@mail.nih.gov.*

Collaborative Research Opportunity: The Surgery Branch of the National Cancer Institute is seeking statements of capability or interest from parties interested in collaborative research to further develop, evaluate or commercialize T cell receptors that target cancer/testis antigens for use in cancer adoptive immunotherapy. For collaboration opportunities, please contact John Hewes, Ph.D. at *hewesj@mail.nih.gov.*

Antiandrogen Small Molecules for the Treatment of Prostate Cancer

Description of Technology: The present licensing opportunity is for a new class of small molecule compounds, and the method of using them to treat prostate cancer. This year it is estimated there will be over 32,000 deaths from prostate cancer showing an unmet need for a more effective treatment particularly for castrate-resistant prostate cancer (CRPC). CRPC is characterized by androgen-independent cancer cells that have adapted to the depletion of hormones and continue to grow. Abnormal androgen receptor signaling is known to drive advanced castrate-resistant prostate cancer. The small molecule compounds of the instant invention are antiandrogens that target androgen receptor signaling in both androgen-independent and androgen-sensitive androgen receptor activity, and androgen receptors that are resistant to the current antiandrogens available. Unlike the currently available

antiandrogens, the new small molecules induce androgen receptor degradation and cell death in prostate cancer cells. Further, these compounds and methods can also induce degradation of other steroid hormone receptors demonstrating the possibility of treating a wider range of cancers.

Potential Commercial Applications:

- Series of steroid receptor compounds that cause cancer cell death
- Method of using the compounds in cancer treatment

Competitive Advantages:

- First small molecule antiandrogen treatment
- Causes cell death, not just loss of function
- Potential to treat other cancers through degradation of other steroid hormone receptors

Development Stage: In vitro data available.

Inventors: Jane B. Trepel, Yeong Sang Kim, Sunmin Lee, Vineet Kumar, and Sanjay V. Malhotra (NCI).

Intellectual Property: HHS Reference No. E–015–2011/0—U.S. Patent Application No. 61/497,129 filed 15 Jun 2011.

Licensing Contact: Whitney Hastings; (301) 451–7337; *hastingw@mail.nih.gov.*

Collaborative Research Opportunity: The National Cancer Institute is seeking statements of capability or interest from parties interested in collaborative research to further develop, evaluate or commercialize Small Molecules for the Treatment of Prostate Cancer. For collaboration opportunities, please contact John Hewes, PhD at *hewesj@mail.nih.gov* or (301) 496–0477.

Dated: October 21, 2011.

Richard U. Rodriguez,

Director, Division of Technology Development and Transfer, Office of Technology Transfer, National Institutes of Health.

[FR Doc. 2011–27858 Filed 10–26–11; 8:45 am]

BILLING CODE 4140–01–P

DEPARTMENT OF HEALTH AND HUMAN SERVICES

National Institutes of Health

Government-Owned Inventions; Availability for Licensing

AGENCY: National Institutes of Health, Public Health Service, HHS.

ACTION: Notice.

SUMMARY: The inventions listed below are owned by an agency of the U.S. Government and are available for licensing in the U.S. in accordance with 35 U.S.C. 207 to achieve expeditious commercialization of results of federally-funded research and development. Foreign patent applications are filed on selected inventions to extend market coverage for companies and may also be available for licensing.

ADDRESSES: Licensing information and copies of the U.S. patent applications listed below may be obtained by writing to the indicated licensing contact at the Office of Technology Transfer, National Institutes of Health, 6011 Executive Boulevard, Suite 325, Rockville, Maryland 20852–3804; telephone: (301) 496–7057; fax: (301) 402–0220. A signed Confidential Disclosure Agreement will be required to receive copies of the patent applications.

Protease Deficient *Bacillus anthracis* With Improved Recombinant Protein Yield Capabilities

Description of Technology: Species of *Bacillus,* such as *Bacillus anthracis, Bacillus cereus,* and *Bacillus subtilis,* are attractive microorganisms for recombinant protein production in view of their fast growth rate, high yield, and ability to secrete produced products directly into the medium. *Bacillus anthracis* is also attractive in view of its ability to produce anthrax toxin and ability to fold proteins correctly. This application claims a *B. anthracis* strain in which more than one secreted protease is inactivated by genetic modification. Such a protease-deficient *B. anthracis* has an improved ability to produce recombinant secreted proteins compared to other bacteria, particularly other *Bacillus.* Improvements include production of intact (i.e., mature full-length) proteins, often at high yield.

Potential Commercial Applications:

- Vaccine production
- Recombinant protein production
- *B. anthracis* vaccine production

Competitive Advantages:

- Highly efficient production of recombinant proteins
- Low cost production of recombinant proteins

Development Stage:

- Early-stage
- *In vitro* data available

Inventors: Andrei Pomerantsev and Stephen Leppla (NIAID).

Publication: Pomerantsev A, *et al.* A *Bacillus anthracis* strain deleted for six proteases serves as an effective host for production of recombinant proteins. Protein Expr Purif. 2011 Nov;80(1):80–90. [PMID 21827967].

Intellectual Property:

- HHS Reference No. E–202–2011/0—U.S. Provisional Application No. 61/514,384 filed 02 Aug 2011
- HHS Reference No. E–202–2011/1—U.S. Provisional Application No. 61/521,617 filed 09 Aug 2011

Licensing Contact: Peter Soukas, J.D.; (301) 435–4646; *soukasp@mail.nih.gov.*

Collaborative Research Opportunity: The NIAID is seeking statements of capability or interest from parties interested in collaborative research to further develop, evaluate or commercialize *B. anthracis* vaccines, *B. anthracis* protein production. For collaboration opportunities, please contact Charles Rainwater at (301) 435–8617.

Parvovirus B19 Codon Optimized Structural Proteins for Vaccine and Diagnostic Applications

Description of Technology: Parvovirus B19 (B19V) is the only known pathogenic human parvovirus. Infection by this viral pathogen can cause transient aplastic crisis in individuals with high red cell turnover, pure red cell aplasia in immunosuppressed patients, and hydrops fetalis during pregnancy. In children, B19V most commonly causes erythema infectiosum, or fifth's disease. Infection can also cause arthropathy and arthralgia. The virus is very erythrotropic, targeting human erythroid (red blood) progenitors found in the blood, bone marrow, and fetal liver. Currently, there are no approved vaccines or antiviral drugs for the treatment or prevention of B19V infection.

The subject technology is a series of plasmid constructs with codon optimized B19 viral capsid genes (VP1 and VP2) that can be expressed in mammalian cells. Transfection of vectors encoding these optimized VP1 and VP2 genes into different mammalian cell lines, including 293, Cos7, and HeLa cells produce virus-like particles (VLPs). The vectors include bicistronic plasmids expressing the VP1 and VP2 proteins at different ratios to produce B19V VLPs with optimal antigenicity for vaccine applications. This technology can also be used for diagnostic applications and development of a viral packaging system for producing infectious B19V virus.

Applications:

- VLPs based vaccines for the prevention and/or treatment of B19V infection
- DNA based vaccines for the prevention and/or treatment of B19V infection
- B19V diagnostics
- Viral packaging system

Advantages:

• Codon optimized VP1 and VP2 genes for better expression in mammalian cell lines

• Expression of B19V VLPs from ''nonpermissive'' cell lines

Development Stage: In vitro data available.

Inventors: Ning Zhi, Sachiko Kajigaya, and Neal S. Young (NHLBI).

Patent Status: HHS Reference No. E–011–2010/0—PCT Application No. PCT/US2011/024199 filed 09 Feb 2011.

Licensing Contact: Kevin W. Chang, Ph.D.; (301) 435–5018; *changke@mail.nih.gov.*

Collaborative Research Opportunity: The National Heart Lung and Blood Institute, Hematology Branch, is seeking statements of capability or interest from parties interested in collaborative research to further develop, evaluate, or commercialize the subject technology. Please contact Cecilia Pazman, Ph.D., at *pazmance@mail.nih.gov* for more information.

Dated: October 21, 2011.

Richard U. Rodriguez,

Director, Division of Technology Development and Transfer, Office of Technology Transfer, National Institutes of Health.

[FR Doc. 2011–27857 Filed 10–26–11; 8:45 am]

BILLING CODE 4140–01–P

DEPARTMENT OF HEALTH AND HUMAN SERVICES

National Institutes of Health

Government-Owned Inventions; Licensing and Collaborative Research Opportunity for PANVAC—Cancer Vaccine for the Prevention and Treatment of Colorectal Cancer

AGENCY: National Institutes of Health, Public Health Service, HHS.

ACTION: Notice.

SUMMARY: The inventions listed below are owned by an agency of the U.S. Government and are available for licensing in the U.S. in accordance with 35 U.S.C. 207 to achieve expeditious commercialization of results of federally-funded research and development. Foreign patent applications are filed on selected inventions to extend market coverage for companies and may also be available for licensing.

ADDRESSES: Licensing information and copies of the U.S. patent applications listed below may be obtained by contacting Sabarni Chatterjee at the Office of Technology Transfer, National Institutes of Health, 6011 Executive Boulevard, Suite 325, Rockville, Maryland 20852; telephone: (301) 435–5587; email *chatterjeesa@mail.nih.gov.* A signed Confidential Disclosure Agreement will be required to receive copies of the patent applications.

Inquiries related to Collaborative Research Opportunities may be directed to Michael Pollack at the Technology Transfer Center, National Cancer Institute, 6120 Executive Boulevard, Suite 450, Rockville, MD 20852; telephone: (301) 435–3118; email *pollackm@mail.nih.gov.*

SUPPLEMENTARY INFORMATION:

Technology Summary

PANVAC is a pox-vector-based cancer vaccine in clinical stage development with high potential for leading to a new therapeutic approach in the prevention and treatment of colorectal cancer. A combination of carcinoembryonic antigen (CEA) and pan-carcinoma antigen MUC–1, and TRICOM, PANVAC has been used with promising results in treating metastatic colorectal cancer.

In a recent multicenter phase II clinical trial reported at ASCO 2011, improved survival was observed among patients vaccinated with PANVAC following resection of colorectal cancer metastases; at a median follow up of forty (40) months, the survival rate of vaccinated patients clearly exceeding that of the unvaccinated contemporary control population. T-cell responses to CEA were also observed in vaccinated patients.

Competitive Advantage of Our Technology

• The technology is in clinical stage, supported by clinical results and numerous publications.

• TRICOM, contained in pox vectors have been evaluated in prime (V)/boost (F) regimens in preclinical models and in several clinical trials in patients with metastatic colorectal cancer.

• Phase I and Phase II clinical data are available (to qualified licensees) for poxvirus recombinants containing transgenes for TRICOM, CEA–TRICOM, and PANVAC. Further clinical studies are ongoing.

• Given the relatively more advanced stage of development of this technology, fewer validation studies are required compared to other immunotherapy related technologies.

Technology Description

Cancer immunotherapy is an approach where tumor associated antigens (TAAs), which are primarily expressed in human tumor cells, and not expressed or minimally expressed in normal tissues, are employed to generate a tumor-specific immune response. Specifically, these antigens serve as targets for the host immune system and elicit responses that results in tumor destruction. The initiation of an effective T-cell immune response to antigens requires two signals. The first one is antigen-specific via the peptide/major histocompatibility complex and the second or ''costimulatory'' signal is required for cytokine production, proliferation, and other aspects of T-cell activation.

The PANVAC technology employs avirulent poxviruses to present a combination of tumor-associated antigens (TAAs) and costimulatory molecules to activate T-cells and break the immune systems tolerance towards cancer cells. This is performed using recombinant poxvirus DNA vectors that encode both T-cell costimulatory molecules and TAAs. The combination of the costimulatory molecules B7.1, ICAM–1 and LFA–3, is known as TRICOM. Recombinant poxviral vaccines (vaccinia (V) and fowlpox (F) containing TRICOM have been evaluated in prime (V)/boost (F) regimens in preclinical models and in several clinical trials in patients with metastatic colorectal cancer. Additionally, PANVAC has shown promising survival results in treating patients with metastatic colorectal cancer.

Furthermore, recombinant poxviral TRICOM based vaccines can also be employed for the prevention and/or therapy of colorectal cancer containing a range of other TAAs such as the T-box transcription factor Brachyury.

Market

With the identification of molecular targets associated with cancer, the focus of drug development has shifted from broadly acting cytotoxic drugs to targeted therapeutics in the hope of finding drugs that selectively kill cancer cells and do not harm normal cells. Historically, because the expertise of pharmaceutical companies has been in the domain of small molecule therapeutics, several compounds have been developed that inhibit the abnormal biochemical activity of cancer cells. This approach has been successful to an extent as illustrated by the kinase inhibitors and EGFR inhibitors. However, as for chemotherapeutics, cancer cells frequently acquire drug resistance to targeted small-molecule therapeutics rendering them ineffective in the long run. In addition, these small-molecules produce adverse side effects which can prevent the administration of the maximum effective dose. An alternative approach to overcome these problems relies on the use of biologics such as antibodies and vaccines.

The biotechnology industry has principally focused on an immunotherapy approach using monoclonal antibodies (mAb) to enlist the help of the patient's own immune system. This approach has successfully led to several FDA approved and marketed mAbs. Typically, cancer cells are less susceptible to acquiring resistance to antibodies; however, as seen for trastuzumab, resistance can occur. Another limitation of mAbs is that they activate only part of the immune system and do not produce future immunity against the cancer. More recently, cancer vaccines are being developed as an addition to the immunotherapy approach. It is expected that activating the cells of the immune system should be effective in killing cancer cells with the added benefit that it would lead to a sustained surveillance by the patient's own body that prevents the tumor from reemerging in the future.

Vaccines have been very successful in the prevention of infectious diseases, and are now being evaluated for the treatment of cancer. The development of cancer vaccines could result in a paradigm shift in the treatment and clinical management of cancer. Recently, a cancer vaccine PROVENGE® (Sipuleucel-T) was approved by the FDA for the treatment of metastatic prostate cancer. The development of the TRICOM-based ''off the shelf'' technology using costimulatory vaccines is designed to magnify the immune response against cancer cells and lead to prolonged cancer immunity.

PANVAC has much potential for becoming a therapeutically effective cancer vaccine for colorectal cancer. It has demonstrated evidence of patient benefit in several Phase I and II clinical studies demonstrating a high safety profile and is a good candidate for initiating pivotal efficacy studies. Recently, very encouraging results were announced for PROSTVAC™ (prostate cancer vaccine), based on the same TRICOM technology platform as PANVAC, which further validates this technology platform. PANVAC is a decidedly mature technology that holds promise to transform the treatment of colorectal cancer.

Patent Estate

The portfolio includes the following issued patents and pending patent applications:

1. U.S. Patent No. 6,756,038 issued June, 29 2004 as well as issued and pending foreign counterparts [HHS Ref. No. E–099–1996/0–US–07];
2. U.S. Patent No. 7,723,096 issued May 25, 2010 as well as continuation and divisional applications, and issued and pending foreign counterparts [HHS Ref. No. E–099–1996/0–US–08];
3. Europe Patent No. 1017810 [HHS Ref. No. E–099–1996/0–EP–05], and all European contracting states in which this patent is validated,
4. Europe Patent Application No. 04011673.3 (now EP Patent No. 1447414) [HHS Ref. No. E–099–1996/0–EP–17], and all European contracting states in which this patent is validated, Japan Patent Application No. 2000–516030 (now JP Patent No. 4291508) [HHS Ref. No. E–099–1996/0–JP–06], and all continuations and divisional applications claiming priority to this application;
5. Australia Patent No. 745863 [HHS Ref. No. E–099–1996/0–AU–03], and all continuations and divisional applications claiming priority to this application;
6. Canada Patent No. 2308127 [HHS Ref. No. E–099–1996/0–CA–04], and all continuations and divisional applications claiming priority to this application;
7. U.S. Patent No. 5,698,530 issued December 6, 1997 as well as issued and pending foreign counterparts [HHS Ref. No. E–200–1990/1–US–02];
8. Australian Patent No. 674492 issued April 22, 1997 [HHS Ref. No. E–200–1990/2–AU–02]; Europe Patent No. 0584266 issued September 3, 2003 [HHS Ref. No. E–200–1990/2–EP–04]; Japan Patent No. 3399943 issued February 21, 2003 [HHS Ref. No. E–200–1990/2–JP–05]; and Canada Patent No. 2102623 issued April 22, 2003 [HHS Ref. No. E–200–1990/2–CA–03];
9. U.S. Patent No. 6,001,349 issued December, 14, 1999 as well as issued and pending foreign counterparts [HHS Ref. No. E–200–1990/3–US–01];
10. U.S. Patent Application No. 10/579,025 filed May 11, 2006 as well as all continuation and divisional applications, and issued and pending foreign counterparts [HHS Ref. No. E–087–2005/0–US–03];
11. U.S. Patent Application No. 10/579,007 filed May 11, 2006 as well as all continuation and divisional applications, and issued and pending foreign counterparts [HHS Ref. No. E–088–2005/0–US–03];
12. U.S. Patent No. 7,118,738 issued October 10, 2006 as well as all continuations and divisional applications, and issued and pending foreign counterparts [HHS Ref. No. E–154–1998/0–US–07];
13. U.S. Patent Application Nos. 08/686,280 filed July 25, 1996 as well as all issued and pending foreign counterparts [HHS Ref. No. E–259–1994/3–US–01];
14. U.S. Patent No. 7,410,644 issued August 12, 2008 as well as all continuation and divisional applications, and issued and pending foreign counterparts [HHS Ref. No. E–259–1994/3–US–08];
15. U.S. Patent Nos. 6,893,869, 6,548,068 and 6,045,802 issued May 17, 2005, April 15, 2003 and April 4, 2000 respectively, as well as issued and pending foreign counterparts [HHS Ref. Nos. E–260–1994/1–US–03, US–02, US–01]; U.S. Patent No. 7,368,116 issued May 6, 2008 and U.S. Patent Application No. 12/112,819, as well as all continuation and divisional applications [HHS Ref. Nos. E–260–1994/1–US–04 and US–05];
16. Europe Patent Application No. 00102998.2 filed October 2, 1995, Europe Patent No. 0784483 issued November 29, 2001, Europe Patent Application No. 09013495.8 filed October 26, 2009, as well as all continuation, and divisional applications [HHS Ref. Nos. E–260–1994/2–EP–15, EP–16 and EP–27]; Japan Patent Application No. 512100/96 filed October 2, 1995; Japan Patent No. 4078319 issued February 8, 2008 [HHS Ref. No. E–260–1994/2–JP–25]; and Japan Patent No. 4160612 issued July 25, 2008, as well as all continuation and divisional applications; [HHS Ref. No. E–260–1994/2–JP–21, JP–25 and JP–26]; Australia Patent No. 688606 issued July 2, 1998 [HHS Ref. No. E–260–1994/2–AU–11]; Canada Patent No. 2201587 issued June 25, 2002 [HHS Ref. No. E–260–1994/2–CA–12];
17. Canada Patent Application No. 2,412,050 filed June 15, 2001 [HHS Ref. No. E–187–2000/0–CA–05]; Australia Patent No. 2001268452 issued November 30, 2006 [HHS Ref. No. E–187–2000/0–AU–06]; Japan Patent Application No. 2002–510097 filed June 15, 2001 [HHS Ref. No. E–187–2000/0–JP–07]; Hong Kong Patent Application No. 03105975.5 filed June 15, 2001 [HHS Ref. No. E–187–2000/0–HK–08];
18. U.S. Patent Application No. 12/280,534 filed February 21, 2007, [HHS Ref. No. E–104–2006/0–US–06]; Australia Patent Application No. 2007221255 filed February 21, 2007 [HHS Ref. No. E–104–2006/0–AU–03]; Europe Patent Application No. 07751371.1 filed February 21,

2007, [HHS Ref. No. E–104–2006/0–EP–05]; Canada Patent Application No. 2642994 filed February 21, 2007 [HHS Ref. No. E–104–2006/0–CA–04];

19. U.S. Patent Application No. 12/528,796 filed August 26, 2009 [HHS Ref. No. E–074–2007/0–US–07]; Australia Patent Application No. 2008221383 filed February 27, 2008 [HHS Ref. No. E–074–2007/0–AU–03]; Europe Patent Application No. 08743578.0 filed February 27, 2008 [HHS Ref. No. E–074–2007/0–EP–05]; Canada Patent Application No. 2,678,404 filed February 27, 2008 [HHS Ref. No. E–074–2007/0–CA–04]; Japan Patent Application No. 2009–551830 filed February 27, 2008 [HHS Ref. No. E–074–2007/0–JP–06];
20. U.S. Patent No. 6,969,609 issued November 29, 2005; U.S. Patent No. 7,211,432 issued May 1, 2007; U.S. Patent Application No. 11/723,666 filed March 21, 2007; as well as all continuation and divisional applications, and issued and pending foreign counterparts [HHS Ref. No. E–256–1998/0, 1];
21. U.S. Patent Application Nos. 60/448,591 and 10/543,944 filed February 20, 2003 and February 20, 2004 respectively, as well as all continuation and divisional applications, and issued and pending foreign counterparts [HHS Ref. No. E–028–2007/0];
22. U.S. Patent No. 6,699,475 issued March 2, 2004, as well as all continuation and divisional applications, and issued and pending foreign counterparts [HHS Ref. No. E–134–2007/0];
23. U.S. Patent No. 5,093,258 issued March 3, 1992, as well as all continuation and divisional applications, and issued and pending foreign counterparts [HHS Ref. No. E–135–2007/0];
24. U.S. Patent Application No. 07/205,189 filed June 10, 1988, as well as all continuation and divisional applications, and issued and pending foreign counterparts [HHS Ref No. E–136–2007/0];
25. U.S. Patent Application No. 60/625,321 filed November 5, 2004, as well as all continuation and divisional applications, and issued and pending foreign counterparts [HHS Ref. No. E–138–2007/0];
26. U.S. Patent Application No. 60/678,329 filed May 5, 2005, as well as all continuation and divisional applications, and issued and pending foreign counterparts [HHS Ref. No. E–139–2007/0]; and
27. U.S. Patent Application No. 07/340,052 filed April 18, 1989, as well as all continuation and divisional applications, and issued and pending foreign counterparts [HHS Ref. No. E–147–2007/0].

Note that some of the patent estate above is available for non-exclusive licensing only.

Cooperative Research and Development Agreement (CRADA) Opportunities

A CRADA partner for the further codevelopment of this technology specifically in colorectal cancer is currently being sought by the Laboratory of Tumor Immunology and Biology, Center for Cancer Research, NCI. The CRADA partner will (a) generate and characterize recombinant poxviruses expressing specific tumor-associated antigens, cytokines, and/or T-cell costimulatory factors, (b) analyze the recombinant poxviruses containing these genes with respect to appropriate expression of the encoded gene product(s), (c) supply adequate amounts of recombinant virus stocks for preclinical testing, (d) manufacture and test selected recombinant viruses for use in human clinical trials for colorectal cancer, (e) submit Drug Master Files detailing the development, manufacture, and testing of live recombinant vaccines to support the NCI-sponsored IND and/or company-sponsored IND, (f) supply adequate amounts of clinical grade recombinant poxvirus vaccines for clinical trials conducted at the NCI Center for Cancer Research (CCR), and (g) provide adequate amounts of vaccines for extramural clinical trials, if agreed upon by the parties, and conduct clinical trials under company-sponsored or NCI-sponsored INDs. NCI will (a) provide genes of tumor-associated antigens, cytokines and other immunostimulatory molecules for incorporation into poxvirus vectors, (b) evaluate recombinant vectors in preclinical models alone and in combination therapies, and (c) conduct clinical trials for colorectal cancer of recombinant vaccines alone and in combination therapies.

Next Step

Licensing and CRADA

Licensing and collaborative research opportunities are available. If you are interested in licensing and/or CRADA opportunities, please contact call Sabarni Chatterjee at (301) 435–5587 or email *chatterjeesa@mail.nih.gov* (for licensing) and Michael Pollack at (301) 435–3118 or email *pollackm@mail.nih.gov* (for CRADAs).

Dated: October 21, 2011.

Richard U. Rodriguez,

Director, Division of Technology Development and Transfer, Office of Technology Transfer, National Institutes of Health.

[FR Doc. 2011–27859 Filed 10–26–11; 8:45 am]

BILLING CODE 4140–01–P

DEPARTMENT OF HEALTH AND HUMAN SERVICES

National Institutes of Health

National Institute of Neurological Disorders and Stroke; Notice of Closed Meeting

Pursuant to section 10(d) of the Federal Advisory Committee Act, as amended (5 U.S.C. App.), notice is hereby given of the following meeting.

The meeting will be closed to the public in accordance with the provisions set forth in sections 552b(c)(4) and 552b(c)(6), Title 5 U.S.C., as amended. The grant applications and the discussions could disclose confidential trade secrets or commercial property such as patentable materials, and personal information concerning individuals associated with the grant applications, the disclosure of which would constitute a clearly unwarranted invasion of personal privacy.

Name of Committee: National Institute of Neurological Disorders and Stroke Special Emphasis Panel, Pilot Clinical Trial.

Date: November 4, 2011.

Time: 5 p.m. to 6 p.m.

Agenda: To review and evaluate grant applications.

Place: Melrose Hotel, 2430 Pennsylvania Ave., NW., Washington, DC 20037.

Contact Person: Shanta Rajaram, Ph.D., Scientific Review Officer, Scientific Review Branch, Division of Extramural Research, NINDS/NIH/DHHS/Neuroscience Center, 6001 Executive Blvd., Suite 3208, MSC 9529, Bethesda, MD 20892, (301) 435–6033, *rajarams@mail.nih.gov.*

This notice is being published less than 15 days prior to the meeting due to timing limitations imposed by the review and funding cycle.

(Catalogue of Federal Domestic Assistance Program Nos. 93.853, Clinical Research Related to Neurological Disorders; 93.854, Biological Basis Research in the Neurosciences, National Institutes of Health, HHS)

Dated: October 21, 2011.

Jennifer S. Spaeth,

Director, Office of Federal Advisory Committee Policy.

[FR Doc. 2011–27871 Filed 10–26–11; 8:45 am]

BILLING CODE 4140–01–P

DEPARTMENT OF HEALTH AND HUMAN SERVICES

National Institutes of Health

National Institute of Allergy and Infectious Diseases; Notice of Closed Meetings

Pursuant to section 10(d) of the Federal Advisory Committee Act, as amended (5 U.S.C. App.), notice is hereby given of the following meetings.

The meetings will be closed to the public in accordance with the provisions set forth in sections 552b(c)(4) and 552b(c)(6), Title 5 U.S.C., as amended. The grant applications and the discussions could disclose confidential trade secrets or commercial property such as patentable material, and personal information concerning individuals associated with the grant applications, the disclosure of which would constitute a clearly unwarranted invasion of personal privacy.

Name of Committee: National Institute of Allergy and Infectious Diseases Special Emphasis Panel; NIAID Peer Review Meeting.

Date: November 18, 2011.

Time: 12 p.m. to 2 p.m.

Agenda: To review and evaluate contract proposals.

Place: National Institutes of Health, 6700B Rockledge Drive, Bethesda, MD 20817 (Telephone Conference Call).

Contact Person: Jane K. Battles, PhD, Scientific Review Officer, Scientific Review Program, Division of Extramural Activities, National Institutes of Health/NIAID, 6700B Rockledge Drive, MSC 7616, Bethesda, MD 20892–7616, (301) 451–2744, *battlesja@mail.nih.gov.*

Name of Committee: National Institute of Allergy and Infectious Diseases Special Emphasis Panel; NIAID Investigator Initiated Program Project Applications (P01).

Date: November 21, 2011.

Time: 9 a.m. to 12:30 p.m.

Agenda: To review and evaluate grant applications.

Place: National Institutes of Health, 6700B Rockledge Drive, Bethesda, MD 20817 (Telephone Conference Call).

Contact Person: Eugene R. Baizman, PhD, Scientific Review Officer, Scientific Review Program, Division of Extramural Activities, NIAID/NIH/DHHS, 6700B Rockledge Drive, MSC 7616, Bethesda, MD 20892, (301) 402–1464, *eb237e@nih.gov.*

Name of Committee: National Institute of Allergy and Infectious Diseases Special Emphasis Panel; Role of Chemokine Receptors in HIV–1 Entry and Cancer.

Date: November 22, 2011

Time: 12 p.m. to 1 p.m.

Agenda: To review and evaluate grant applications.

Place: National Institutes of Health, 6700B Rockledge Drive, Bethesda, MD 20817 (Telephone Conference Call).

Contact Person: Sujata Vijh, PhD, Scientific Review Officer, Scientific Review Program, Division of Extramural Activities, NIAID/NIH/DHHS, 6700B Rockledge Drive, MSC 7616, Bethesda, MD 20892–7616, (301) 594–0985, *vijhs@niaid.nih.gov.*

(Catalogue of Federal Domestic Assistance Program Nos. 93.855, Allergy, Immunology, and Transplantation Research; 93.856, Microbiology and Infectious Diseases Research, National Institutes of Health, HHS)

Dated: October 21, 2011.

Jennifer S. Spaeth,

Director, Office of Federal Advisory Committee Policy.

[FR Doc. 2011–27869 Filed 10–26–11; 8:45 am]

BILLING CODE 4140–01–P

DEPARTMENT OF HEALTH AND HUMAN SERVICES

National Institutes of Health

National Human Genome Research Institute; Notice of Closed Meeting

Pursuant to section 10(d) of the Federal Advisory Committee Act, as amended (5 U.S.C. App.), notice is hereby given of the following meeting.

The meeting will be closed to the public in accordance with the provisions set forth in sections 552b(c)(4) and 552b(c)(6), Title 5 U.S.C., as amended. The grant applications and the discussions could disclose confidential trade secrets or commercial property such as patentable material, and personal information concerning individuals associated with the grant applications, the disclosure of which would constitute a clearly unwarranted invasion of personal privacy.

Name of Committee: National Human Genome Research Institute Special Emphasis Panel, DAP for CEGS–SEP.

Date: November 22, 2011.

Time: 12 p.m. to 1 p.m.

Agenda: To review and evaluate grant applications.

Place: NHGRI Fishers Lane Office, 5635 Fishers Lane, 4076, Rockville, MD 20852.

Contact Person: Keith McKenney, PhD, Scientific Review Officer, NHGRI, 5635 Fishers Lane, Suite 4076, Bethesda, MD 20814, 301–594–4280, *mckenneyk@mail.nih.gov.*

(Catalogue of Federal Domestic Assistance Program Nos. 93.172, Human Genome Research, National Institutes of Health, HHS)

Dated: October 21, 2011.

Jennifer S. Spaeth,

Director, Office of Federal Advisory Committee Policy.

[FR Doc. 2011–27866 Filed 10–26–11; 8:45 am]

BILLING CODE 4140–01–P

DEPARTMENT OF HEALTH AND HUMAN SERVICES

National Institutes of Health

Office of the Director, National Institutes of Health, Notice of Meeting

Pursuant to section 10(a) of the Federal Advisory Committee Act, as amended (5 U.S.C. App), notice is hereby given of a meeting of the Director's Council of Public Representatives.

The meeting will be open to the public, with attendance limited to space available. Individuals who plan to attend and need special assistance, such as sign language interpretation or other reasonable accommodations, should notify the Contact Person listed below in advance of the meeting.

Name of Committee: Director's Council of Public Representatives.

Date: November 4, 2011.

Time: 1:30 p.m. to 3:30 p.m.

Agenda: The Council will receive information on the Obesity Initiative, Science Education and new initiatives at NIH.

Place: National Institutes of Health, Building 31, C Wing, 6th Floor, Conference Room 6, 31 Center Drive, Bethesda, MD 20892.

Contact Person: Sheria Washington, Executive Secretary/Outreach Program Specialist, Office of Communications and Public Liaison, Office of the Director, National Institutes of Health, 1 Center Drive, Room 331, Bethesda, MD 20892, 301–594–4837, *Sheria.Washington@nih.gov.*

This notice is being published less than 15 days prior to the meeting due to last minute finalization of the meeting agenda.

Any interested person may file written comments with the committee by forwarding the statement to the Contact Person listed on this notice. The statement should include the name, address, telephone number and when applicable, the business or professional affiliation of the interested person.

In the interest of security, NIH has instituted stringent procedures for entrance onto the NIH campus. All visitor vehicles, including taxicabs, hotel, and airport shuttles will be inspected before being allowed on campus. Visitors will be asked to show one form of identification (for example, a government-issued photo ID, driver's license, or passport) and to state the purpose of their visit.

Information is also available on the Institute's/Center's home page: *http:///www.copr.nih.gov,* where an agenda and any additional information for the meeting will be posted when available.

(Catalogue of Federal Domestic Assistance Program Nos. 93.14, Intramural Research Training Award; 93.22, Clinical Research Loan Repayment Program for Individuals from Disadvantaged Backgrounds; 93.232, Loan Repayment Program for Research Generally; 93.39, Academic Research Enhancement Award; 93.936, NIH Acquired Immunodeficiency Syndrome Research Loan

Repayment Program; 93.187, Undergraduate Scholarship Program for Individuals from Disadvantaged Backgrounds, National Institutes of Health, HHS)

Dated: October 21,2011.

Jennifer S. Spaeth,

Director, Office of Federal Advisory Committee Policy.

[FR Doc. 2011–27851 Filed 10–26–11; 8:45 am]

BILLING CODE 4140–01–P

DEPARTMENT OF HEALTH AND HUMAN SERVICES

National Institutes of Health

National Eye Institute; Notice of Closed Meetings

Pursuant to section 10(d) of the Federal Advisory Committee Act, as amended (5 U.S.C. App.), notice is hereby given of the following meetings.

The meetings will be closed to the public in accordance with the provisions set forth in sections 552b(c)(4) and 552b(c)(6), Title 5 U.S.C., as amended. The grant applications and the discussions could disclose confidential trade secrets or commercial property such as patentable material, and personal information concerning individuals associated with the grant applications, the disclosure of which would constitute a clearly unwarranted invasion of personal privacy.

Name of Committee: National Eye Institute Special Emphasis Panel, NEI Genomic Research Grant R01 Applications on Integrative Data Analysis for Vision Research.

Date: November 4, 2011.

Time: 8:30 a.m. to 2 p.m.

Agenda: To review and evaluate grant applications.

Place: Hyatt Regency Bethesda, One Bethesda Metro Center, 7400 Wisconsin Avenue, Bethesda, MD 20814.

Contact Person: Anne E. Schaffner, PhD, Chief, Scientific Review Officer, Division of Extramural Research, National Eye Institute, National Institutes of Health, 5635 Fishers Lane, Suite 1300, MSC 9300, 301–451–2020, *aes@nei.nih.gov*.

This notice is being published less than 15 days prior to the meeting due to the timing limitations imposed by the review and funding cycle.

Name of Committee: National Eye Institute Special Emphasis Panel, NEI Clinical Applications II.

Date: November 15, 2011.

Time: 3:30 p.m. to 4:30 p.m.

Agenda: To review and evaluate cooperative agreement applications.

Place: National Institutes of Health, NEI, 5635 Fishers Lane, Rockville, MD 20892 (Telephone Conference Call).

Contact Person: Anne E. Schaffner, PhD, Chief, Scientific Review Officer, Division of Extramural Research, National Eye Institute, National Institutes of Health, 5635 Fishers Lane, Suite 1300, MSC 9300, 301–451–2020, *aes@nei.nih.gov*.

This notice is being published less than 15 days prior to the meeting due to the timing limitations imposed by the review and funding cycle.

Name of Committee: National Eye Institute Special Emphasis Panel, Vision Research Grant Applications.

Date: December 5, 2011.

Time: 8:30 a.m. to 5 p.m

Agenda: To review and evaluate grant applications,

Place: Embassy Suites Hotel at the Chevy Chase Pavilion, 4300 Military Road, NW., Tenleytown I, Washington, DC 20015.

Contact Person: Daniel R. Kenshalo, PhD, Scientific Review Officer, Division of Extramural Research, National Eye Institute, National Institutes of Health, 5635 Fishers Lane, Suite 1300, MSC 9300, 301–451–2020, *kenshalod@nei.nih.gov*.

(Catalogue of Federal Domestic Assistance Program Nos. 93.867, Vision Research, National Institutes of Health, HHS)

Dated: October 21, 2011.

Jennifer S. Spaeth,

Director, Office of Federal Advisory Committee Policy.

[FR Doc. 2011–27833 Filed 10–26–11; 8:45 am]

BILLING CODE 4140–01–P

DEPARTMENT OF HEALTH AND HUMAN SERVICES

National Institutes of Health

National Institute of Neurological Disorders and Stroke Notice of Closed Meetings

Pursuant to section 10(d) of the Federal Advisory Committee Act, as amended (5 U.S.C. App.), notice is hereby given of the following meetings.

The meetings will be closed to the public in accordance with the provisions set forth in sections 552b(c)(4) and 552b(c)(6), Title 5 U.S.C., as amended. The grant applications and the discussions could disclose confidential trade secrets or commercial property such as patentable materials, and personal information concerning individuals associated with the grant applications, the disclosure of which would constitute a clearly unwarranted invasion of personal privacy.

Name of Committee: National Institute of Neurological Disorders and Stroke Special Emphasis Panel; NST–2 Conflicts.

Dates: October 31–November 1, 2011.

Time: 8 a.m. to 5 p.m.

Agenda: To review and evaluate grant applications.

Place: The Fairmont Washington, DC, 2401 M Street, NW., Washington, DC 20037.

Contact Person: JoAnn McConnell, PhD, Scientific Review Officer, Scientific Review Branch, Division of Extramural Research, NINDS/NIH/DHHS/Neuroscience Center, 6001 Executive Blvd., Suite 3208, MSC 9529, Bethesda, MD 20892, (301) 496–5324, *mcconnej@ninds.nih.gov*.

This notice is being published less than 15 days prior to the meeting due to timing limitations imposed by the review and funding cycle.

Name of Committee: National Institute of Neurological Disorders and Stroke Special Emphasis Panel; T–32 Training Grant & R–25 NIH Summer Research Experience Program Peer Review Meeting.

Dates: November 30–December 1, 2011.

Time: 8 a.m. to 5 p.m.

Agenda: To review and evaluate grant applications.

Place: Argonaut Hotel, 495 Jefferson Street, San Francisco, CA 94109.

Contact Person: Phillip F. Wiethorn, Scientific Review Officer, Scientific Review Branch, Division of Extramural Research, NINDS/NIH/DHHS/Neuroscience Center, 6001 Executive Blvd., Suite 3208, MSC 9529, Bethesda, MD 20892, (301) 496–5388, *wiethorp@ninds.nih.gov*.

(Catalogue of Federal Domestic Assistance Program Nos. 93.853, Clinical Research Related to Neurological Disorders; 93.854, Biological Basis Research in the Neurosciences, National Institutes of Health, HHS)

Dated: October 21, 2011.

Jennifer S. Spaeth,

Director, Office of Federal Advisory Committee Policy.

[FR Doc. 2011–27822 Filed 10–26–11; 8:45 am]

BILLING CODE 4140–01–P

DEPARTMENT OF HEALTH AND HUMAN SERVICES

National Institutes of Health

National Cancer Institute; Amended Notice of Meeting

Notice is hereby given of a change in the meeting of the National Cancer Institute Clinical Trials and Translational Research Advisory Committee, November 9, 2011, 9 a.m. to November 9, 2011, 4 p.m., National Institutes of Health, Building 31, C-wing, 6th Floor, 31 Center Drive, Conference Room 10, Bethesda, MD 20892 which was published in the **Federal Register** on August 24, 2011, 76FR52960.

This notice is amended to add the Clinical Trials Network Strategic Planning ad hoc Subcommittee meeting on November 8, 2011 from 7 p.m. to 9 p.m. at the Hyatt Regency Bethesda, One Bethesda Metro Center, 7400 Wisconsin Ave., Bethesda, MD. The meeting is open to the public.

Dated: October 21, 2011.

Jennifer S. Spaeth,

Director, Office of Federal Advisory Committee Policy.

[FR Doc. 2011–27868 Filed 10–26–11; 8:45 am]

BILLING CODE 4140–01–P

DEPARTMENT OF HEALTH AND HUMAN SERVICES

National Institutes of Health

National Cancer Institute; Notice of Closed Meeting

Pursuant to section 10(d) of the Federal Advisory Committee Act, as amended (5 U.S.C. Appendix 2) notice is hereby given of the following meeting.

The meeting will be closed to the public in accordance with the provisions set forth in sections 552b(c)(4) and 552b(c)(6), Title 5 U.S.C., as amended. The purpose of this meeting is to evaluate requests for preclinical development resources, biologics, clinical assays and other developmental programs for potential new therapeutics for the treatment of cancer. The outcome of the evaluation will provide information to internal NCI committees that will decide whether NCI should support requests and make available contract resources for development of the potential therapeutic to improve the treatment of various forms of cancer. The research proposals and the discussions could disclose confidential trade secrets or commercial property such as patentable material and personal information concerning individuals associated with the proposed research projects, the disclosure of which would constitute a clearly unwarranted invasion of personal privacy.

Name of Committee: National Cancer Institute Special Emphasis Panel, Clinical Assay Development Program (CADP).

Date: November 29, 2011.

Time: 8 a.m.–3 p.m.

Agenda: To review grant applications for the CADP.

Place: Bethesda Marriott North Hotel, 5701 Marinelli Road, Bethesda, MD 20852.

Contact Person: Dr. Tracy Lively, Executive Secretary, Clinical Assay Development Program (CADP), National Cancer Institute, NIH, 6130 Executive Boulevard, EPN/6042, Bethesda, MD 20892, 301–496–1591, *livelyt@mail.nih.gov*.

(Catalogue of Federal Domestic Assistance Program Nos. 93.392, Cancer Construction; 93.393, Cancer Cause and Prevention Research; 93.394, Cancer Detection and Diagnosis Research; 93.395, Cancer Treatment Research; 93.396, Cancer Biology Research; 93.397, Cancer Centers Support; 93.398, Cancer Research Manpower; 93.399, Cancer Control, National Institutes of Health, HHS)

Dated: October 21, 2011.

Jennifer S. Spaeth,

Director, Office of Federal Advisory Committee Policy.

[FR Doc. 2011–27867 Filed 10–26–11; 8:45 am]

BILLING CODE 4140–01–P

DEPARTMENT OF HEALTH AND HUMAN SERVICES

National Institutes of Health

National Cancer Institute; Notice of Meetings

Pursuant to section 10(d) of the Federal Advisory Committee Act, as amended (5 U.S.C. App.), notice is hereby given of the meeting of the National Cancer Advisory Board.

The meeting will be open to the public as indicated below, with attendance limited to space available. Individuals who plan to attend and need special assistance, such as sign language interpretation or other reasonable accommodations, should notify the Contact Person listed below in advance of the meeting.

A portion of the meeting will be closed to the public as indicated below in accordance with the provisions set forth in section 552b(c)(6), Title 5 U.S.C., as amended for the review, discussion, and evaluation of individual intramural programs and projects conducted by the National Cancer Institute, including consideration of personnel qualifications and performance, and the competence of individual investigators, the disclosure of which would constitute a clearly unwarranted invasion of personal privacy.

Name of Committee: National Cancer Advisory Board, Subcommittee on Global Cancer Research.

Open: December 5, 2011, 6:30 p.m. to 8 p.m.

Agenda: Discussion on Global Cancer.

Place: Hyatt Regency Bethesda, One Metro Center, Bethesda, MD 20814.

Contact Person: Dr. Ted Trimble, Executive Secretary, NCAB Subcommittee on Global Cancer Research, National Cancer Institute, National Institutes of Health, 6130 Executive Boulevard, EPN/7025, Rockville, MD 20892–8345, (301) 496–2522, *trimblet@mail.nih.gov*.

Name of Committee: National Cancer Advisory Board.

Open: December 6, 2011, 9 a.m. to 3:30 p.m.

Agenda: Program reports and presentations; business of the Board.

Place: National Institutes of Health, 9000 Rockville Pike, Building 31, C Wing, 6th Floor, Conference Room 10, Bethesda, MD 20892.

Closed: December 6, 2011, 3:30 p.m. to 5 p.m.

Agenda: Review intramural program site visit outcomes. Discussion of confidential personnel issues.

Place: National Institutes of Health, 9000 Rockville Pike, Building 31, C Wing, 6th Floor, Conference Room 10, Bethesda, MD 20892.

Contact Person: Dr. Paulette S. Gray, Executive Secretary, National Cancer Institute, National Institutes of Health, 6116 Executive Boulevard, 8th Floor, Room 8001, Bethesda, MD 20892–8327, (301) 496–5147.

Any interested person may file written comments with the committee by forwarding the statement to the Contact Person listed on this notice. The statement should include the name, address, telephone number and when applicable, the business or professional affiliation of the interested person.

In the interest of security, NIH has instituted stringent procedures for entrance onto the NIH campus. All visitor vehicles, including taxicabs, hotel, and airport shuttles will be inspected before being allowed on campus. Visitors will be asked to show one form of identification (for example, a government-issued photo ID, driver's license, or passport) and to state the purpose of their visit.

Information is also available on the Institute's/Center's home page: *deainfo.nci.nih.gov/advisory/ncab.htm,* where an agenda and any additional information for the meeting will be posted when available.

(Catalogue of Federal Domestic Assistance Program Nos. 93.392, Cancer Construction; 93.393, Cancer Cause and Prevention Research; 93.394, Cancer Detection and Diagnosis Research; 93.395, Cancer Treatment Research; 93.396, Cancer Biology Research; 93.397, Cancer Centers Support; 93.398, Cancer Research Manpower; 93.399, Cancer Control, National Institutes of Health, HHS)

Dated: October 21, 2011

Jennifer S. Spaeth,

Director, Office of Federal Advisory Committee Policy.

[FR Doc. 2011–27865 Filed 10–26–11; 8:45 am]

BILLING CODE 4140–01–P

DEPARTMENT OF HEALTH AND HUMAN SERVICES

National Institutes of Health

National Cancer Institute; Notice of Closed Meeting

Pursuant to section 10(d) of the Federal Advisory Committee Act, as amended (5 U.S.C. Appendix 2) notice is hereby given of the following meeting.

The meeting will be closed to the public in accordance with the provisions set forth in sections 552b(c)(4) and 552b(c)(6), Title 5 U.S.C., as amended. The purpose of this meeting is to evaluate requests for preclinical

development resources for potential new therapeutics for the treatment of cancer. The outcome of the evaluation will provide information to internal NCI committees that will decide whether NCI should support requests and make available contract resources for development of the potential therapeutic to improve the treatment of various forms of cancer. The research proposals and the discussions could disclose confidential trade secrets or commercial property such as patentable material and personal information concerning individuals associated with the proposed research projects, the disclosure of which would constitute a clearly unwarranted invasion of personal privacy.

Name of Committee: National Cancer Institute Special Emphasis Panel, NCI Experimental Therapeutics Program (NExT).

Date: December 7, 2011.

Time: 8:30 a.m.–4:30 p.m.

Agenda: To evaluate the NCI Experimental Therapeutics Program Portfolio.

Place: Marriott North Conference Center, 5701 Marinelli Road, Rockville, MD 20852.

Contact Person: Dr. Barbara Mroczkowski, Executive Secretary, NCI Experimental Therapeutics Program, National Cancer Institute, NIH, 31 Center Drive, Room 3A44, Bethesda, MD 20817, (301) 496–4291, *mroczkowskib@mail.nih.gov.*

(Catalogue of Federal Domestic Assistance Program Nos. 93.392, Cancer Construction; 93.393, Cancer Cause and Prevention Research; 93.394, Cancer Detection and Diagnosis Research; 93.395, Cancer Treatment Research; 93.396, Cancer Biology Research; 93.397, Cancer Centers Support; 93.398, Cancer Research Manpower; 93.399, Cancer Control, National Institutes of Health, HHS)

Dated: October 21, 2011.

Jennifer S. Spaeth,

Director, Office of Federal Advisory Committee Policy.

[FR Doc. 2011–27863 Filed 10–26–11; 8:45 am]

BILLING CODE 4140–01–P

DEPARTMENT OF HEALTH AND HUMAN SERVICES

National Institutes of Health

Center for Scientific Review; Notice of Closed Meetings

Pursuant to section 10(d) of the Federal Advisory Committee Act, as amended (5 U.S.C. App.), notice is hereby given of the following meetings.

The meetings will be closed to the public in accordance with the provisions set forth in sections 552b(c)(4) and 552b(c)(6), Title 5 U.S.C., as amended. The grant applications and the discussions could disclose confidential trade secrets or commercial property such as patentable material, and personal information concerning individuals associated with the grant applications, the disclosure of which would constitute a clearly unwarranted invasion of personal privacy.

Name of Committee: Center for Scientific Review Special Emphasis Panel, Small Business: Digestive Sciences.

Date: November 14, 2011.

Time: 8 a.m. to 6 p.m.

Agenda: To review and evaluate grant applications.

Place: Bethesda North Marriott Hotel & Conference Center, 5701 Marinelli Road, Bethesda, MD 20852.

Contact Person: Mushtaq A. Khan, D.V.M., PhD, Scientific Review Officer, Center for Scientific Review, National Institutes of Health, 6701 Rockledge Drive, Room 2176, MSC 7818, Bethesda, MD 20892, (301) 435–1778, *khanm@csr.nih.gov.*

Name of Committee: Center for Scientific Review Special Emphasis Panel, Program Project: Program in Virus Translational Control.

Date: November 17–18, 2011.

Time: 8 a.m. to 12 p.m.

Agenda: To review and evaluate grant applications.

Place: National Institutes of Health, 6701 Rockledge Drive, Bethesda, MD 20892 (Virtual Meeting).

Contact Person: David R. Jollie, PhD, Scientific Review Officer, Center for Scientific Review, National Institutes of Health, 6701 Rockledge Drive, Room 4150, MSC 7806, Bethesda, MD 20892, (301) 435–1722, *jollieda@csr.nih.gov.*

Name of Committee: Center for Scientific Review Special Emphasis Panel, Member Conflict: Brain Diseases—Multiple Sclerosis, Amyotrophic Lateral Sclerosis, Frontal Temporal Dementia.

Date: November 17, 2011.

Time: 1 p.m. to 3 p.m.

Agenda: To review and evaluate grant applications.

Place: National Institutes of Health, 6701 Rockledge Drive, Bethesda, MD 20892 Telephone Conference Call).

Contact Person: Samuel C. Edwards, PhD, IRG Chief, Center for Scientific Review, National Institutes of Health, 6701 Rockledge Drive, Room 5210, MSC 7846, Bethesda, MD 20892, (301) 435–1246, *edwardss@csr.nih.gov.*

Name of Committee: Center for Scientific Review Special Emphasis Panel, Program Project: NMR and Computational Studies of Biomolecules.

Date: November 21–23, 2011.

Time: 9 a.m. to 11:59 a.m.

Agenda: To review and evaluate grant applications.

Place: National Institutes of Health, 6701 Rockledge Drive, Bethesda, MD 20892 (Virtual Meeting).

Contact Person: James W. Mack, PhD, Scientific Review Officer, Center for Scientific Review, National Institutes of Health, 6701 Rockledge Drive, Room 4154, MSC 7806, Bethesda, MD 20892, (301) 435–2037, *mackj2@csr.nih.gov.*

Name of Committee: Center for Scientific Review Special Emphasis Panel, Member Conflict: Viral Pathogenesis and Immunity.

Date: December 1–2, 2011.

Time: 11 a.m. to 6 p.m.

Agenda: To review and evaluate grant applications.

Place: National Institutes of Health, 6701 Rockledge Drive, Bethesda, MD 20892 (Virtual Meeting).

Contact Person: Kenneth M. Izumi, PhD, Scientific Review Officer, Center for Scientific Review, National Institutes of Health, 6701 Rockledge, Rm 3204, MSC 7808, Bethesda, MD 20892, (301) 496–6980, *izumikm@csr.nih.gov.*

(Catalogue of Federal Domestic Assistance Program Nos. 93.306, Comparative Medicine; 93.333, Clinical Research; 93.306, 93.333, 93.337, 93.393–93.396, 93.837–93.844, 93.846–93.878, 93.892, 93.893; National Institutes of Health, HHS)

Dated: October 21, 2011.

Jennifer S. Spaeth,

Director, Office of Federal Advisory Committee Policy.

[FR Doc. 2011–27862 Filed 10–26–11; 8:45 am]

BILLING CODE 4140–01–P

DEPARTMENT OF HEALTH AND HUMAN SERVICES

National Institutes of Health

National Institute on Deafness and Other Communication Disorders Draft 2012–2016 Strategic Plan

AGENCY: National Institute on Deafness and Other Communication Disorders NIDCD), National Institutes of Health (NIH), Department of Health and Human Services (DHHS).

ACTION: Notice.

SUMMARY: The National Institute on Deafness and Other Communication Disorders (NIDCD), National Institutes of Health (NIH) is requesting public comment on the draft 2012–2016 NIDCD Strategic Plan. The NIDCD supports and conducts research and research training in the areas of hearing and balance; smell and taste; and voice, speech, and language. The Strategic Plan serves as a guide to the NIDCD in prioritizing its research investment, illustrates the current state-of-the-science, and highlights recent advances in the communication sciences. The draft Plan presents a series of goals and objectives that represent the most promising research needs within the NIDCD's mission areas. The draft Plan is available for download at: *http://www.nidcd.nih.gov/about/plans/strategic/pages/publiccomments.aspx.*

DATES: Comments will be accepted through November 23, 2011.

ADDRESSES: Comments must be submitted electronically via the Web-based form at: *http://www.nidcd.nih.gov/about/plans/strategic/pages/publiccomments.aspx*. The Web-based form accepts text but cannot accept attachments. You will receive an electronic confirmation acknowledging receipt of your response, but will not receive individualized feedback from NIDCD on any comments.

FOR FURTHER INFORMATION CONTACT: Specific questions about this Notice should be directed to: *NIDCDStrategicPlan@mail.nih.gov*.

SUPPLEMENTARY INFORMATION: The NIDCD's mission is to conduct and support biomedical research, behavioral research, and research training in the normal and disordered processes of hearing, balance, smell, taste, voice, speech, and language. The institute also conducts and supports research and research training related to disease prevention and health promotion; addresses special biomedical and behavioral problems associated with people who have communication impairments or disorders; and supports efforts to create devices that substitute for lost and impaired sensory and communication function. To accomplish these goals, the NIDCD manages a broad portfolio of both basic and clinical research. The portfolio is organized into three program areas: Hearing and balance; smell and taste; and voice, speech, and language. The three program areas seek to answer fundamental scientific questions about normal function and disorders and to identify patient-oriented scientific discoveries for preventing, screening, diagnosing, and treating disorders of human communication.

The draft 2012–2016 NIDCD Strategic Plan has been developed over the past 12 months by NIDCD staff in consultation with scientific experts, the National Deafness and Other Communication Disorders Advisory Council, and the public. (Details of the development process are included in Appendix C of the draft Plan.) The goals listed in the draft Plan are an assessment of research areas that present the greatest scientific opportunities and public health needs over the next five years for the three program areas: Hearing and balance; smell and taste; and voice, speech and language.

The NIDCD has identified four Priority Areas that have the potential to increase our understanding of the normal and disordered processes of hearing, balance, smell, taste, voice, speech, and language and to further our knowledge in human communication sciences. They are:

- *Priority Area 1*—Understanding Normal Function: Deepen our understanding of the mechanisms underlying normal function of the systems of human communication. By defining what is normal in both animal models and humans, we can better understand mechanisms of disease.
- *Priority Area 2*—Understanding Diseases and Disorders: Increase our knowledge of the mechanisms of diseases, disorders, and dysfunctions that impair human communication and health. Understanding mechanisms that underlie diseases and disorders is an important step in developing better prevention and treatment strategies.
- *Priority Area 3*—Improving Diagnosis, Treatment, and Prevention: Develop, test, and improve diagnosis, treatment, and prevention of diseases, disorders, and dysfunctions of human communication and health. Diagnosis considers normal function and provides targets for prevention and treatment. Improvements in prevention and treatment lead to better outcomes with fewer side effects.
- *Priority Area 4*—Improving Outcomes for Human Communication: Accelerate the translation of research discoveries into practice; increase access to health care; and enhance the delivery, quality, and effectiveness of care to improve personal and public health. Scientifically-validated prevention and treatment models will lead to better personal and public health only if they are translated effectively into routine practice.

The goals presented in the Plan are a guide for:

- *Scientists:* To better understand the directions that NIDCD research may take in the future;
- *The NIDCD:* To assist in developing funding opportunity announcements and to identify projects for high program priority nomination; and
- *The Public:* To understand the state of communication sciences and to discover the scientific breakthroughs that are possible with sustained investments in biomedical research.

Responses to this Notice are voluntary. Proprietary, classified, confidential, or sensitive information should not be included in your response. The Government reserves the right to use any non-proprietary technical information in any resultant solicitation(s). Names and affiliation (when submitted) may be subject to release in response to requests made under the U.S. Freedom of Information Act.

This Notice is for information and planning purposes only and should not be construed as a solicitation or as an obligation on the part of the Federal Government, or the NIH. The NIH does not intend to award a grant or contract to pay for the preparation of any information submitted or for the NIH's use of such information. No basis for claims against the NIH shall arise as a result of a response to this request for information or the NIH's use of such information as part of the NIDCD Strategic Plan.

The NIDCD anticipates that the finalized plan will be published on the NIDCD Web site in January 2012.

Dated: October 20, 2011.

James F. Battey,

Director, NIDCD, National Institutes of Health.

[FR Doc. 2011–27823 Filed 10–26–11; 8:45 am]

BILLING CODE 4140–01–P

DEPARTMENT OF HEALTH AND HUMAN SERVICES

National Institutes of Health

Announcement of Requirements and Registration for the NIBIB DEsign by Biomedical Undergraduate Teams (DEBUT) Challenge

Authority: 15 U.S.C. 3719.

AGENCY: National Institute of Biomedical Imaging and Bioengineering, National Institutes of Health (NIH), Department of Health and Human Services (HHS).

ACTION: Notice.

SUMMARY: The National Institute of Biomedical Imaging and Bioengineering (NIBIB) DEBUT Challenge is open to teams of undergraduate students working on projects that develop innovative solutions to unmet health and clinical problems. NIBIB's mission is to improve health by leading the development and accelerating the application of biomedical technologies. The goals of the DEBUT Challenge are (1) to provide undergraduate students valuable experiences such as working in teams, identifying unmet clinical needs, and designing, building, and debugging solutions for such open-ended problems; (2) to generate novel, innovative tools to improve health care, consistent with NIBIB's purpose to support research, training, dissemination of health information, and other programs with respect to biomedical imaging and engineering and associated technologies and modalities with biomedical

applications; and (3) to highlight and acknowledge the contributions and accomplishments of undergraduate students.

DATES: The competition begins October 27, 2011.

Submission Period: January 03, 2012, 12:01 a.m. (EST) to May 26, 2012, 11:59 p.m. (EDT).

Judging Period: May 27, 2012, to July 22, 2012.

Winners announced: July 31, 2012, 5 p.m. (EDT).

Award ceremony: October 2012, Biomedical Engineering Society Conference (exact date to be determined).

FOR FURTHER INFORMATION CONTACT: Dr. Zeynep Erim at (301) 451–4797 or *Zeynep.Erim@nih.gov.*

SUPPLEMENTARY INFORMATION: *Subject of Challenge Competition:* The NIBIB DEBUT Challenge solicits entries that develop innovative solutions to unmet health and clinical problems under one of the following categories:

- Diagnostic Devices/Methods.
- Therapeutic Devices/Methods.
- Technology to Aid Underserved Populations and Individuals with Disabilities.

Eligibility Rules for Participating in the Competition:

1. To be eligible to win a prize under this challenge, each individual on the Student Team must:

(a) Be a citizen or permanent resident of the United States;

(b) Be an undergraduate student enrolled full-time in an undergraduate curriculum during the academic year 2011–2012;

(c) Have his/her own active Challenge.gov account that he/she has created at *http://www.challenge.gov*;

(d) Form or join a ''Student Team'' with at least two other individuals who satisfy the criteria in (a), (b), and (c) above for the purpose of developing an entry for submission to this challenge. While it is expected that most of the individuals participating in the competition may be students from biomedical engineering departments, interdisciplinary teams including students from other fields are welcome and encouraged;

(e) Acknowledge understanding and acceptance of the *DEBUT Challenge rules* by signing the NIBIB DEBUT Challenge Certification Form found at *http://www.nibib.nih.gov/Training/UndergradGrad/DEBUT/Form.pdf.* Each entry must include one NIBIB DEBUT Challenge Certification Form, completed with dates and the printed names and signatures of each individual member of the Student Team. Entries that do not provide a complete Certification Form will be disqualified from the challenge;

(f) Comply with all the requirements under this section; and

(g) Not be a Federal employee acting within the scope of his or her employment. Federal employees seeking to participate in this challenge outside the scope of their employment should consult their ethics official prior to developing a submission.

2. By participating in this challenge, each individual agrees to abide by all rules of this challenge and the Challenge.gov Terms of Participation (*http://www.challenge.gov/terms*).

3. Each entry into this challenge must have been conceived, designed, and implemented by the Student Team. Student Teams participating in capstone design projects are especially encouraged to enter the challenge.

4. Each Student Team may submit one entry into this challenge through one member of the Student Team appointed to do so by that Student Team (e.g., the ''captain'' or ''submitting participant'' of that Student Team).

5. Each entry into this challenge must describe an original biomedical engineering project that falls into one of the following *3 categories:*

(a) Diagnostic Devices/Methods

e.g., sensors, imaging devices, imaging agents, telehealth, clinical laboratory diagnostics;

(b) Therapeutic Devices/Methods

e.g., implants, biomaterials, surgical tools, tissue engineering, drug and gene delivery;

(c) Technology to Aid Underserved Populations and Individuals with Disabilities

e.g., point-of-care technologies, devices/methods to address health disparities, m-health, aids for individuals with disabilities (see *http://www.ada.gov/pubs/adastatute08.htm#12102* for a definition of ''disability'').

The examples under the different categories above are provided for illustration but not limitation. It is possible for an entry to fit into more than one category. In such instances, Student Teams should choose the category to which the entry is most closely related.

6. Each entry must comply with Section 508 standards that require Federal agencies' electronic and information technology be accessible to people with disabilities, *http://www.section508.gov/.*

7. Each individual on the Student Team must be 13 years of age or older. Individuals who are younger than 18 must have their parent or legal guardian complete the Parental Consent Form found at *http://www.challenge.gov/parental_consent_form.pdf.*

8. Each entry must:

a. Include the following:

- Cover letter, on department letterhead, from a faculty member from the Biomedical Engineering, Bioengineering or similar department of the institution in which the Student Team members are enrolled, verifying that the entry was achieved by the named Student Team that is enrolled full-time in an undergraduate curriculum during the academic year 2011–2012;
- The NIBIB DEBUT Challenge Certification Form (downloadable from *http://www.nibib.nih.gov/Training/UndergradGrad/DEBUT/Form.pdf*), completed with dates and the printed names and signatures of each individual member of the Student Team;
- Project Title;
- Team members and affiliations;
- Challenge category;
- Abstract;
- Description of clinical need or problem, including background and current methods available;
- Design, including a discussion of the innovative aspects;
- Evidence of a working prototype (results/graphics obtained with the designed solution);
- A completed Parental Consent Form, accessible at *http://www.challenge.gov/parental_consent_form.pdf,* for each individual on the Student Team who is under the age of 18.

b. Use Arial font and a font size of at least 11 points.

c. Not exceed 6 pages, including any graphics. Submissions exceeding 6 pages will not be accepted. An optional 2-minute video displaying the operation of the device/method may be included. However the 6-page write-up must be a stand-alone description of the project.

9. NIBIB will claim no rights to intellectual property. Individuals on the Student Team will retain intellectual property ownership as applicable arising from their entry. By participating in this challenge, such individuals grant to NIBIB an irrevocable, paid-up, royalty-free, nonexclusive worldwide license to post, link to, share, and display publicly the entry on the Web, in newsletters or pamphlets, and by other information products. It is the responsibility of the individuals on the Student Team to obtain any rights necessary to use, disclose, or reproduce any intellectual property owned by third parties and incorporated in the entry for all anticipated uses of the entry.

10. One individual appointed by his/her Student Team (e.g., the ''captain'' or ''submitting participant'') will submit a Student Team's entry on behalf of the Student Team by following the links and instructions at *http://debut.challenge.gov/* and certify that the entry meets all the challenge rules.

11. All entries must be submitted by the challenge deadline, May 26, 2012, 11:59 p.m. EDT.

12. Entries must not infringe upon any copyright or any other rights of any third party.

13. By participating in this challenge, each individual agrees to assume any and all risks and waive claims against the Federal Government and its related entities, except in the case of willful misconduct, for any injury, death, damage, or loss of property, revenue, or profits, whether direct, indirect, or consequential, arising from participation in this prize challenge, whether the injury, death, damage, or loss arises through negligence or otherwise.

14. Based on the subject matter of the challenge, the type of work that it will possibly require, as well as an analysis of the likelihood of any claims for death, bodily injury, or property damage, or loss potentially resulting from challenge participation, individuals are not required to obtain liability insurance or demonstrate financial responsibility in order to participate in this challenge.

15. By participating in this challenge, each individual agrees to indemnify the Federal Government against third party claims for damages arising from or related to challenge activities.

16. An individual shall not be deemed ineligible because the individual used Federal facilities or consulted with Federal employees during this challenge if the facilities and employees are made available to all individuals participating in the challenge on an equitable basis.

Prize: One winning Student Team will be selected for each of the three challenge categories. The winning Student Team in each category will be awarded a $10,000 prize, to be distributed among the members of the Student Team.

Winning Student Teams will be honored at the NIBIB DEBUT Award Ceremony during the 2012 Conference of the Biomedical Engineering Society (BMES) in Atlanta, Georgia, in October 2012. Each winning Student Team will receive, in addition to the prize, up to $2,000 toward the travel and registration costs for the members of the Student Team to attend the award ceremony. Winners will need to provide receipts to document travel expenses for reimbursement purposes in accordance with NIH policy and applicable laws and regulations (*http://oma.od.nih.gov/manualchapters/management/1500/*), for example:

—Air travel must be by coach class, unless an alternative is medically necessary and documented.

—If you choose to drive to the meeting instead of taking a common carrier (airplane, train, or bus), you may be reimbursed at 51 cents per mile, not to exceed the cost of common carrier.

—Limousine/taxi reimbursements are provided to and from airports as well as to and from meetings. Receipts are required whenever a fare exceeds $75 per trip.

—Per diem rates include lodging and meals and incidental expenses (M&IE). Reimbursement for these varies by city. The first meeting of BMES at which the award ceremony will be held will be in October 2012 in Atlanta.

The current allowable room rate is $132 and the M&IE is $56. For future years, the lodging and M&IE for the host city will be posted on the NIBIB Web site.

Reimbursement rates are subject to change. Updates will be posted on the NIBIB Web site at *http://www.nibib.nih.gov/Training/UndergradGrad/DEBUT.*

Basis Upon Which Winner Will Be Selected:

The winning entry in each category of the challenge will be selected based on the following criteria:

• Significance of the problem addressed—Does the entry address an important problem or a critical barrier to progress in clinical care or research?

• Impact on potential users and clinical care—How likely is it that the entry will exert a sustained, powerful influence on the problem and medical field addressed?

• Innovative design (creativity and originality of concept)—Does the entry utilize novel theoretical concepts, approaches or methodologies, or instrumentation?

• Working prototype that implements the design concept and produces targeted results—Has evidence been provided (in the form of results, graphs, photographs, films, etc.) that a working prototype has been achieved?

The above four criteria will be weighed equally and will apply to all challenge categories.

Additional Information: For more information and to submit entries, visit *http://www.debut.challenge.gov/.*

The NIBIB prize-approving official will be Roderic Pettigrew, PhD, M.D., Director, NIBIB. Prizes will be paid using electronic funds transfer and may be subject to Federal income taxes. NIH will comply with the Internal Revenue Service (IRS) withholding and reporting requirements, where applicable.

Dated: October 21, 2011.

James M. Anderson,

Director, Division of Program Coordination, Planning, and Strategic Initiatives, National Institutes of Health.

[FR Doc. 2011–27860 Filed 10–26–11; 8:45 am]

BILLING CODE 4140–01–P

DEPARTMENT OF HOMELAND SECURITY

Coast Guard

[USCG–2011–0737]

Collection of Information Under Review by Office of Management and Budget

AGENCY: Coast Guard, DHS.

ACTION: Thirty-day notice requesting comments.

SUMMARY: In compliance with the Paperwork Reduction Act of 1995 the U.S. Coast Guard is forwarding Information Collection Requests (ICRs), abstracted below, to the Office of Management and Budget (OMB), Office of Information and Regulatory Affairs (OIRA), requesting approval of a revision to the following collections of information: 1625–0032, Vessel Inspection Related Forms and Reporting Requirements Under Title 46 U.S. Code.; 1625–0094, Ships Carrying Bulk Hazardous Liquids; and 1625–0096, Report of Oil or Hazardous Substance Discharge; and Report of Suspicious Maritime Activity. Our ICRs describe the information we seek to collect from the public. Review and comments by OIRA ensure we only impose paperwork burdens commensurate with our performance of duties.

DATES: Comments must reach the Coast Guard and OIRA on or before November 28, 2011.

ADDRESSES: You may submit comments identified by Coast Guard docket number [USCG–2011–0737] to the Docket Management Facility (DMF) at the U.S. Department of Transportation (DOT) and/or to OIRA. To avoid duplicate submissions, please use only one of the following means:

(1) *Online:* (a) To Coast Guard docket at *http://www.regulations.gov.* (b) To OIRA by e-mail via: *OIRA-submission@omb.eop.gov.*

(2) *Mail:* (a) DMF (M–30), DOT, West Building Ground Floor, Room W12–140, 1200 New Jersey Avenue, SE.,

Washington, DC 20590–0001. (b) To OIRA, 725 17th Street, NW., Washington, DC 20503, attention Desk Officer for the Coast Guard.

(3) *Hand Delivery:* To DMF address above, between 9 a.m. and 5 p.m., Monday through Friday, except Federal holidays. The telephone number is 202–366–9329.

(4) *Fax:* (a) To DMF, 202–493–2251. (b) To OIRA at 202–395–6566. To ensure your comments are received in a timely manner, mark the fax, attention Desk Officer for the Coast Guard.

The DMF maintains the public docket for this Notice. Comments and material received from the public, as well as documents mentioned in this Notice as being available in the docket, will become part of the docket and will be available for inspection or copying at room W12–140 on the West Building Ground Floor, 1200 New Jersey Avenue, SE., Washington, DC, between 9 a.m. and 5 p.m., Monday through Friday, except Federal holidays. You may also find the docket on the Internet at *http://www.regulations.gov.*

Copies of the ICRs are available through the docket on the Internet at *http://www.regulations.gov.* Additionally, copies are available from: Commandant (CG–611), *Attn:* Paperwork Reduction Act Manager, U.S. Coast Guard, 2100 2nd St., SW., Stop 7101, Washington DC 20593–7101.

FOR FURTHER INFORMATION CONTACT: Ms. Kenlinishia Tyler, Office of Information Management, telephone 202–475–3652 or fax 202–475–3929, for questions on these documents. Contact Ms. Renee V. Wright, Program Manager, Docket Operations, 202–366–9826, for questions on the docket.

SUPPLEMENTARY INFORMATION:

Public Participation and Request for Comments

This Notice relies on the authority of the Paperwork Reduction Act of 1995; 44 U.S.C. chapter 35, as amended. An ICR is an application to OIRA seeking the approval, extension, or renewal of a Coast Guard collection of information (Collection). The ICR contains information describing the Collection's purpose, the Collection's likely burden on the affected public, an explanation of the necessity of the Collection, and other important information describing the Collections. There is one ICR for each Collection.

The Coast Guard invites comments on whether these ICRs should be granted based on the Collections being necessary for the proper performance of Departmental functions. In particular, the Coast Guard would appreciate comments addressing: (1) The practical utility of the Collections; (2) the accuracy of the estimated burden of the Collections; (3) ways to enhance the quality, utility, and clarity of information subject to the Collections; and (4) ways to minimize the burden of the Collections on respondents, including the use of automated collection techniques or other forms of information technology. These comments will help OIRA determine whether to approve the ICRs referred to in this Notice.

We encourage you to respond to this request by submitting comments and related materials. Comments to Coast Guard or OIRA must contain the OMB Control Number of the ICR. They must also contain the docket number of this request, [USCG 2011–0737], and must be received by November 28, 2011. We will post all comments received, without change, to *http://www.regulations.gov.* They will include any personal information you provide. We have an agreement with DOT to use their DMF. Please see the ''Privacy Act'' paragraph below.

Submitting Comments

If you submit a comment, please include the docket number [USCG–2011–0737], indicate the specific section of the document to which each comment applies, providing a reason for each comment. If you submit a comment online via *http://www.regulations.gov,* it will be considered received by the Coast Guard when you successfully transmit the comment. If you fax, hand deliver, or mail your comment, it will be considered as having been received by the Coast Guard when it is received at the DMF. We recommend you include your name, mailing address, an e-mail address, or other contact information in the body of your document so that we can contact you if we have questions regarding your submission.

You may submit comments and material by electronic means, mail, fax, or delivery to the DMF at the address under **ADDRESSES**, but please submit them by only one means. To submit your comment online, go to *http://www.regulations.gov,* and type ''USCG–2011–0737'' in the ''Keyword'' box. If you submit your comments by mail or hand delivery, submit them in an unbound format, no larger than 8½ by 11 inches, suitable for copying and electronic filing. If you submit comments by mail and would like to know that they reached the Facility, please enclose a stamped, self-addressed postcard or envelope. We will consider all comments and material received during the comment period and will address them accordingly.

Viewing Comments and Documents

To view comments, as well as documents mentioned in this Notice as being available in the docket, go to *http://www.regulations.gov,* click on the ''read comments'' box, which will then become highlighted in blue. In the ''Keyword'' box insert ''USCG–2011–0737'' and click ''Search.'' Click the ''Open Docket Folder'' in the ''Actions'' column. You may also visit the DMF in Room W12–140 on the ground floor of the DOT West Building, 1200 New Jersey Avenue, SE., Washington, DC 20590, between 9 a.m. and 5 p.m., Monday through Friday, except Federal holidays.

OIRA posts its decisions on ICRs online at *http://www.reginfo.gov/public/do/PRAMain* after the comment period for each ICR. An OMB Notice of Action on each ICR will become available via a hyperlink in the OMB Control Numbers: 1625–0032, 16225–0094 and 1625–0096.

Privacy Act

Anyone can search the electronic form of comments received in dockets by the name of the individual submitting the comment (or signing the comment, if submitted on behalf of an association, business, labor union, *etc.*). You may review a Privacy Act statement regarding Coast Guard public dockets in the January 17, 2008, issue of the **Federal Register** (73 FR 3316).

Previous Request for Comments

This request provides a 30-day comment period required by OIRA. The Coast Guard published the 60-day notice (76 FR 52336, August 22, 2011) required by 44 U.S.C. 3506(c)(2). That Notice elicited no comments.

Information Collection Request

1. *Title:* Vessel Inspection Related Forms and Reporting Requirements Under Title 46 U.S. Code.

OMB Control Number: 1625–0032.

Type of Request: Revision of a currently approved collection.

Respondents: Owners, operators, agents and masters of vessels.

Abstract: This collection of information requires owners, operators, agents or masters of certain inspected vessels to obtain and/or post various forms as part of the Coast Guard's Commercial Vessel Safety Program.

Forms: CG–841, CG–854, CG–948, CG–949, CG–950, CG–950A, CG–2832.

Burden Estimate: The estimated burden has decreased from 1,686 hours to 1,601 hours a year.

2. *Title:* Ships Carrying Bulk Hazardous Liquids.

OMB Control Number: 1625–0094.

Type of Request: Revision of a currently approved collection.

Respondents: Owners and operators of chemical tank vessels.

Abstract: This information is needed to ensure the safe transport of bulk hazardous liquids on chemical tank vessels and to protect the environment from pollution.

Forms: CG–4602B, CG–5148, CG–5148A, CG–5148B and CG–5461.

Burden Estimate: The estimated burden has increased from 3,410 hours to 5,291 hours a year.

3. *Title:* Report of Oil or Hazardous Substance Discharge; and Report of Suspicious Maritime Activity.

OMB Control Number: 1625–0096.

Type of Request: Revision of a currently approved collection.

Respondents: Persons-in-charge of a vessel or onshore/offshore facility; owners or operators of vessels or facilities required to have security plans; and the public.

Abstract: Any discharge of oil or a hazardous substance must be reported to the National Response Center (NRC) so that the pre-designated on-scene coordinator can be informed and appropriate spill mitigation action carried out. The NRC also receives suspicious activity reports from the public and disseminates this information to appropriate entities.

Forms: None.

Burden Estimate: The estimated burden has decreased from 13,017 hours to 12,098 hours a year.

Authority: The Paperwork Reduction Act of 1995; 44 U.S.C. chapter 35, as amended.

Dated: October 21, 2011.

R.E. Day,

Rear Admiral, U.S. Coast Guard, Assistant Commandant for Command, Control, Communications, Computers and Information Technology.

[FR Doc. 2011–27755 Filed 10–26–11; 8:45 am]

BILLING CODE 9110–04–P

DEPARTMENT OF HOMELAND SECURITY

Coast Guard

[USCG–2011–0750]

Collection of Information Under Review by Office of Management and Budget

AGENCY: Coast Guard, DHS.

ACTION: Thirty-day notice requesting comments.

SUMMARY: In compliance with the Paperwork Reduction Act of 1995 the U.S. Coast Guard is forwarding an Information Collection Request (ICR), abstracted below, to the Office of Management and Budget (OMB), Office of Information and Regulatory Affairs (OIRA), requesting approval of a revision to the following collection of information: 1625–0006, Shipping Articles. Our ICR describes the information we seek to collect from the public. Review and comments by OIRA ensure we only impose paperwork burdens commensurate with our performance of duties.

DATES: Comments must reach the Coast Guard and OIRA on or before November 28, 2011.

ADDRESSES: You may submit comments identified by Coast Guard docket number [USCG–2011–0750] to the Docket Management Facility (DMF) at the U.S. Department of Transportation (DOT) and/or to OIRA. To avoid duplicate submissions, please use only one of the following means:

(1) *Online:* (a) To Coast Guard docket at *http://www.regulation.gov.* (b) To OIRA by e-mail via: *OIRA-submission@omb.eop.gov.*

(2) *Mail:* (a) DMF (M–30), DOT, West Building Ground Floor, Room W12–140, 1200 New Jersey Avenue, SE., Washington, DC 20590–0001. (b) To OIRA, 725 17th Street NW., Washington, DC 20503, attention Desk Officer for the Coast Guard.

(3) *Hand Delivery:* To DMF address above, between 9 a.m. and 5 p.m., Monday through Friday, except Federal holidays. The telephone number is 202–366–9329.

(4) *Fax:* (a) To DMF, 202–493–2251. (b) To OIRA at 202–395–6566. To ensure your comments are received in a timely manner, mark the fax, attention Desk Officer for the Coast Guard.

The DMF maintains the public docket for this Notice. Comments and material received from the public, as well as documents mentioned in this Notice as being available in the docket, will become part of the docket and will be available for inspection or copying at room W12–140 on the West Building Ground Floor, 1200 New Jersey Avenue, SE., Washington, DC, between 9 a.m. and 5 p.m., Monday through Friday, except Federal holidays. You may also find the docket on the Internet at *http://www.regulations.gov.*

A copy of the ICR is available through the docket on the Internet at *http://www.regulations.gov.* Additionally, copies are available from: Commandant (CG–611), ATTN: Paperwork Reduction Act Manager, US Coast Guard, 2100 2nd St SW., STOP 7101, Washington DC 20593–7101.

FOR FURTHER INFORMATION CONTACT: Ms. Kenlinishia Tyler, Office of Information Management, telephone 202–475–3652 or fax 202–475–3929, for questions on these documents. Contact Ms. Renee V. Wright, Program Manager, Docket Operations, 202–366–9826, for questions on the docket.

SUPPLEMENTARY INFORMATION:

Public Participation and Request for Comments

This Notice relies on the authority of the Paperwork Reduction Act of 1995; 44 U.S.C. Chapter 35, as amended. An ICR is an application to OIRA seeking the approval, extension, or renewal of a Coast Guard collection of information (Collection). The ICR contains information describing the Collection's purpose, the Collection's likely burden on the affected public, an explanation of the necessity of the Collection, and other important information describing the Collections. There is one ICR for each Collection.

The Coast Guard invites comments on whether this ICR should be granted based on the Collection being necessary for the proper performance of Departmental functions. In particular, the Coast Guard would appreciate comments addressing: (1) The practical utility of the collections; (2) the accuracy of the estimated burden of the collection; (3) ways to enhance the quality, utility, and clarity of information subject to the collection; and (4) ways to minimize the burden of collections on respondents, including the use of automated collection techniques or other forms of information technology. These comments will help OIRA determine whether to approve the ICR referred to in this Notice.

We encourage you to respond to this request by submitting comments and related materials. Comments to Coast Guard or OIRA must contain the OMB Control Number of the ICR. They must also contain the docket number of this request, [USCG 2011–0750], and must be received by November 28, 2011. We will post all comments received, without change, to *http://www.regulations.gov.* They will include any personal information you provide. We have an agreement with DOT to use their DMF. Please see the ''Privacy Act'' paragraph below.

Submitting Comments

If you submit a comment, please include the docket number [USCG–2011–0750], indicate the specific section of the document to which each comment applies, providing a reason for each comment. If you submit a comment online via *http://www.regulations.gov,* it

will be considered received by the Coast Guard when you successfully transmit the comment. If you fax, hand deliver, or mail your comment, it will be considered as having been received by the Coast Guard when it is received at the DMF. We recommend you include your name, mailing address, an e-mail address, or other contact information in the body of your document so that we can contact you if we have questions regarding your submission.

You may submit comments and material by electronic means, mail, fax, or hand delivery to the DMF at the address under **ADDRESSES**, but please submit them by only one means. To submit your comment online, go to *http://www.regulations.gov,* and type ''USCG–2011–0750'' in the ''Keyword'' box. If you submit your comments by mail or hand delivery, submit them in an unbound format, no larger than 8½ by 11 inches, suitable for copying and electronic filing. If you submit comments by mail and would like to know that they reached the Facility, please enclose a stamped, self-addressed postcard or envelope. We will consider all comments and material received during the comment period and will address them accordingly.

Viewing Comments and Documents

To view comments, as well as documents mentioned in this Notice as being available in the docket, go to *http://www.regulations.gov,* click on the ''read comments'' box, which will then become highlighted in blue. In the ''Keyword'' box insert ''USCG–2011–0750'' and click ''Search.'' Click the ''Open Docket Folder'' in the ''Actions'' column. You may also visit the DMF in Room W12–140 on the ground floor of the DOT West Building, 1200 New Jersey Avenue, SE., Washington, DC 20590, between 9 a.m. and 5 p.m., Monday through Friday, except Federal holidays.

OIRA posts its decisions on ICRs online at *http://www.reginfo.gov/public/do/PRAMain* after the comment period for each ICR. An OMB Notice of Action on each ICR will become available via a hyperlink in the OMB Control Number: 1625–0006.

Privacy Act

Anyone can search the electronic form of comments received in dockets by the name of the individual submitting the comment (or signing the comment, if submitted on behalf of an association, business, labor union, etc.). You may review a Privacy Act statement regarding Coast Guard public dockets in the January 17, 2008, issue of the **Federal Register** (73 FR 3316).

Previous Request for Comments

This request provides a 30-day comment period required by OIRA. The Coast Guard published the 60-day notice (76 FR 52338, August 22, 2011) required by 44 U.S.C. 3506(c)(2). That Notice elicited no comments.

Information Collection Request

Title: Shipping Articles.

OMB Control Number: 1625–0006.

Type of Request: Revision of a previously approved collection.

Respondents: Shipping companies.

Abstract: Title 46 United States Code § 10302 and 10502 and Title 46 Code of Federal Regulations (CFR) 14.201 require applicable owners, charterers, managing operators, masters, or individuals in charge to make a shipping agreement in writing with each seaman before the seaman commences employment. Additionally, 46 CFR 14.313 requires shipping companies to submit Shipping Articles to the Coast Guard: three years after the article was generated; upon going out of business or merger with another company; or upon request by the Coast Guard. Upon receipt and acceptance, Shipping Articles are transferred and archived at the Federal Records Center in Suitland, Maryland.

Forms: CG–705A.

Burden Estimate: The estimated burden is 18,000 hours a year.

Authority: The Paperwork Reduction Act of 1995; 44 U.S.C. Chapter 35, as amended.

Dated: October 21, 2011.

R.E. Day,

Rear Admiral, U.S. Coast Guard, Assistant Commandant for Command, Control, Communications, Computers and Information Technology.

[FR Doc. 2011–27756 Filed 10–26–11; 8:45 am]

BILLING CODE 9110–04–P

DEPARTMENT OF HOMELAND SECURITY

U.S. Customs and Border Protection

Agency Information Collection Activities: Entry and Immediate Delivery Application

AGENCY: U.S. Customs and Border Protection (CBP), Department of Homeland Security

ACTION: 60-Day Notice and request for comments; Extension of an existing collection of information: 1651–0024.

SUMMARY: As part of its continuing effort to reduce paperwork and respondent burden, CBP invites the general public and other Federal agencies to comment on an information collection requirement concerning the Entry and Immediate Delivery Application (Forms 3461 and 3461 ALT). This request for comment is being made pursuant to the Paperwork Reduction Act of 1995 (Pub. L. 104–13).

DATES: Written comments should be received on or before December 27, 2011, to be assured of consideration.

ADDRESS: Direct all written comments to U.S. Customs and Border Protection, Attn: Tracey Denning, Regulations and Rulings, Office of International Trade, 799 9th Street, NW., 5th Floor, Washington, DC 20229–1177.

FOR FURTHER INFORMATION CONTACT: Requests for additional information should be directed to Tracey Denning, U.S. Customs and Border Protection, Regulations and Rulings, Office of International Trade, 799 9th Street, NW., 5th Floor, Washington, DC 20229–1177, at (202) 325–0265.

SUPPLEMENTARY INFORMATION: CBP invites the general public and other Federal agencies to comment on proposed and/or continuing information collections pursuant to the Paperwork Reduction Act of 1995 (Pub. L. 104–13). The comments should address: (a) Whether the collection of information is necessary for the proper performance of the functions of the agency, including whether the information shall have practical utility; (b) the accuracy of the agency's estimates of the burden of the collection of information; (c) ways to enhance the quality, utility, and clarity of the information to be collected; (d) ways to minimize the burden including the use of automated collection techniques or the use of other forms of information technology; and (e) the annual cost burden to respondents or record keepers from the collection of information (total capital/startup costs and operations and maintenance costs). The comments that are submitted will be summarized and included in the CBP request for Office of Management and Budget (OMB) approval. All comments will become a matter of public record. In this document CBP is soliciting comments concerning the following information collection:

Title: Entry and Immediate Delivery Application.

OMB Number: 1651–0024.

Form Number: CBP Form 3461 and Form 3461 ALT.

Abstract: All items imported into the United States are subject to examination before entering the commerce of the United States. There are two procedures available to effect the release of imported merchandise, including ''entry'' pursuant to 19 U.S.C. 1484, and ''immediate delivery'' pursuant to 19

U.S.C. 1448(b). Under both procedures, CBP Forms 3461 and 3461 ALT are the source documents in the packages presented to Customs and Border Protection (CBP). The information collected on CBP Forms 3461 and 3461 ALT allow CBP officers to verify that the information regarding the consignee and shipment is correct and that a bond is on file with CBP. CBP also uses these forms to close out the manifest and to establish the obligation to pay estimated duties in the time period prescribed by law or regulation. CBP Form 3461 is also a delivery authorization document and is given to the importing carrier to authorize the release of the merchandise.

CBP Forms 3461 and 3461 ALT are provided for by 19 CFR parts 141 and 142. These forms are accessible at: *http://www.cbp.gov/xp/cgov/toolbox/forms/.*

Current Actions: CBP proposes to extend the expiration date of this information collection with no change to the burden hours or to the information being collected.

Type of Review: Extension (without change).

Affected Public: Businesses.

CBP Form 3461

Estimated Number of Respondents: 6,529.

Estimated Number of Responses per Respondent: 1,411.

Estimated Total Annual Responses: 9,210,160.

Estimated Time per Response: 15 minutes.

Estimated Total Annual Burden Hours: 2,302,540.

CBP Form 3461 ALT

Estimated Number of Respondents: 6,795.

Estimated Number of Responses per Respondent: 1,390.

Estimated Total Annual Responses: 9,444,069.

Estimated Time per Response: 3 minutes.

Estimated Total Annual Burden Hours: 472,203.

Dated: October 24, 2011.

Tracey Denning,

Agency Clearance Officer, U.S. Customs and Border Protection.

[FR Doc. 2011–27875 Filed 10–26–11; 8:45 am]

BILLING CODE 9111–14–P

DEPARTMENT OF HOMELAND SECURITY

U.S. Customs and Border Protection

Agency Information Collection Activities: Prior Disclosure

AGENCY: U.S. Customs and Border Protection (CBP), Department of Homeland Security.

ACTION: 60-Day Notice and request for comments; Extension of an existing collection of information: 1651–0074.

SUMMARY: As part of its continuing effort to reduce paperwork and respondent burden, CBP invites the general public and other Federal agencies to comment on an information collection requirement concerning Prior Disclosure. This request for comment is being made pursuant to the Paperwork Reduction Act of 1995 (Pub. L. 104–13).

DATES: Written comments should be received on or before December 27, 2011, to be assured of consideration.

ADDRESSES: Direct all written comments to U.S. Customs and Border Protection, Attn: Tracey Denning, Regulations and Rulings, Office of International Trade, 799 9th Street, NW., 5th Floor, Washington, DC 20229–1177.

FOR FURTHER INFORMATION CONTACT: Requests for additional information should be directed to Tracey Denning, U.S. Customs and Border Protection, Regulations and Rulings, Office of International Trade, 799 9th Street, NW., 5th Floor, Washington, DC 20229–1177, at (202) 325–0265.

SUPPLEMENTARY INFORMATION: CBP invites the general public and other Federal agencies to comment on proposed and/or continuing information collections pursuant to the Paperwork Reduction Act of 1995 (Pub. L. 104–13). The comments should address: (a) Whether the collection of information is necessary for the proper performance of the functions of the agency, including whether the information shall have practical utility; (b) the accuracy of the agency's estimates of the burden of the collection of information; (c) ways to enhance the quality, utility, and clarity of the information to be collected; (d) ways to minimize the burden including the use of automated collection techniques or the use of other forms of information technology; and (e) the annual cost burden to respondents or record keepers from the collection of information (total capital/startup costs and operations and maintenance costs). The comments that are submitted will be summarized and included in the CBP request for Office of Management and Budget (OMB) approval. All comments will become a matter of public record. In this document CBP is soliciting comments concerning the following information collection:

Title: Prior Disclosure.

OMB Number: 1651–0074.

Form Number: None.

Abstract: The Prior Disclosure program establishes a method for a potential violator to disclose to CBP that they have committed an error or a violation with respect to the legal requirements of entering merchandise into the United States, such as underpaid tariffs or duties or misclassified merchandise. The procedure for making a prior disclosure is set forth in 19 CFR 162.74 which requires that respondents submit information about the merchandise involved, a specification of the false statements or omissions, and what the true and accurate information should be. A valid prior disclosure will entitle the disclosing party to the reduced penalties pursuant to 19 U.S.C. 1592(c)(4).

Current Actions: CBP proposes to extend the expiration date of this information collection with no change to the burden hours or to the information collected.

Type of Review: Extension (without change).

Affected Public: Businesses.

Estimated Number of Respondents: 3,500.

Estimated Number of Annual Responses: 3,500.

Estimated Time per Response: 1 hour.

Estimated Total Annual Burden Hours: 3,500.

Dated: October 24, 2011.

Tracey Denning,

Agency Clearance Officer, U.S. Customs and Border Protection.

[FR Doc. 2011–27876 Filed 10–26–11; 8:45 am]

BILLING CODE 9111–14–P

DEPARTMENT OF HOUSING AND URBAN DEVELOPMENT

[Docket No. FR–5575–N–01]

Statutorily Mandated Designation of Difficult Development Areas and Qualified Census Tracts for 2012

AGENCY: Office of the Assistant Secretary for Policy Development and Research, HUD.

ACTION: Notice.

SUMMARY: This document designates ''Difficult Development Areas'' (DDAs) for purposes of the Low-Income Housing Tax Credit (LIHTC) under Section 42 of the Internal Revenue Code

of 1986 (IRC) (26 U.S.C. 42). The United States Department of Housing and Urban Development (HUD) makes new DDA designations annually. The designations of ''Qualified Census Tracts'' (QCTs) under IRC Section 42 published October 6, 2009, remain in effect.

In addition to announcing the 2012 DDA designations, HUD seeks public comment on whether it should use Small Area Fair Market Rents (FMRs), rather than metropolitan-area FMRs, in future designations of metropolitan DDAs.

DATES: *Comment Due Date:* December 27, 2011.

ADDRESSES: Interested persons are invited to submit comments regarding this rule to the Regulations Division, Office of General Counsel, 451 7th Street, SW., Room 10276, Department of Housing and Urban Development, Washington, DC 20410–0500. Communications must refer to the above docket number and title. There are two methods for submitting public comments. All submissions must refer to the above docket number and title.

1. Submission of Comments by Mail. Comments may be submitted by mail to the Regulations Division, Office of General Counsel, Department of Housing and Urban Development, 451 7th Street, SW., Room 10276, Washington, DC 20410–0500.

2. Electronic Submission of Comments. Interested persons may submit comments electronically through the Federal eRulemaking Portal at *http://www.regulations.gov.* HUD strongly encourages commenters to submit comments electronically. Electronic submission of comments allows the commenter maximum time to prepare and submit comments, ensures timely receipt by HUD, and enables HUD to make them immediately available to the public. Comments submitted electronically through the *http://www.regulations.gov* Web site can be viewed by other commenters and interested members of the public. Commenters should follow the instructions provided on that site to submit comments electronically.

Note: To receive consideration as public comments, comments must be submitted through one of the two methods specified above. Again, all submissions must refer to the docket number and title of the rule.

No Facsimile Comments. Facsimile (FAX) comments are not acceptable.

Public Inspection of Public Comments. All properly submitted comments and communications submitted to HUD will be available for public inspection and copying between 8 a.m. and 5 p.m. eastern time weekdays at the above address. Due to security measures at the HUD Headquarters building, an advance appointment to review the public comments must be scheduled by calling the Regulations Division at 202–708–3055 (this is not a toll-free number). Individuals with speech or hearing impairments may access this number through TTY by calling the Federal Relay Service at 800–877–8339. Copies of all comments submitted are available for inspection and downloading at *http://www.regulations.gov.*

FOR FURTHER INFORMATION CONTACT: For questions on how areas are designated and on geographic definitions, contact Michael K. Hollar, Senior Economist, Economic Development and Public Finance Division, Office of Policy Development and Research, Department of Housing and Urban Development, 451 Seventh Street, SW., Room 8234, Washington, DC 20410–6000; telephone number 202–402–5878, or send an email to *Michael.K.Hollar@hud.gov.* For specific legal questions pertaining to Section 42, contact Branch 5, Office of the Associate Chief Counsel, Passthroughs and Special Industries, Internal Revenue Service, 1111 Constitution Avenue, NW., Washington, DC 20224; telephone number 202–622–3040, fax number 202–622–4753. For questions about the ''HUB Zones'' program, contact Mariana Pardo, Assistant Administrator for Procurement Policy, Office of Government Contracting, Small Business Administration, 409 Third Street, SW., Suite 8800, Washington, DC 20416; telephone number 202–205–8885, fax number 202–205–7167, or send an email to *hubzone@sba.gov.* A text telephone is available for persons with hearing or speech impairments at 202–708–8339. (These are not toll-free telephone numbers.) Additional copies of this notice are available through HUD User at 800–245–2691 for a small fee to cover duplication and mailing costs.

Copies Available Electronically: This notice and additional information about DDAs and QCTs are available electronically on the Internet at *http://www.huduser.org/datasets/qct.html.*

SUPPLEMENTARY INFORMATION:

This Document

This notice designates DDAs for each of the 50 states, the District of Columbia, Puerto Rico, American Samoa, Guam, the Northern Mariana Islands, and the U.S. Virgin Islands. The designations of DDAs in this notice are based on final Fiscal Year (FY) 2011 Fair Market Rents (FMRs), FY 2011 income limits, 2000 Decennial Census population counts for nonmetropolitan areas, and 2010 Decennial Census population counts for metropolitan areas, as explained below.

This notice also seeks public comment on whether HUD should change the methodology for determining metropolitan DDAs to use Small Area FRMs (SAFMRS), estimated at the ZIP-Code level based on the relationship of ZIP-Code rents to metropolitan area rents, as the housing cost component of the DDA formula rather than metropolitan-area FMRs. Such a change would more widely distribute DDAs to metropolitan areas around the country than the current methodology, and encourage the development of LIHTC and tax-exempt bond-financed housing in neighborhoods with potentially greater opportunities for resident employment and education.

2000 and 2010 Census

Data from the 2010 census on total population of metropolitan areas and from the 2000 census for nonmetropolitan areas are used in the designation of DDAs. Population totals from the 2000 census are used for the designation of nonmetropolitan areas because 2010 population totals are not uniformly available for all nonmetropolitan areas, specifically Guam and the Virgin Islands. The Office of Management and Budget (OMB) first published new metropolitan area definitions incorporating 2000 census data in OMB Bulletin No. 03–04 on June 6, 2003, and updated them periodically through OMB Bulletin No. 09–01 on November 20, 2008. The FY 2011 FMRs and FY 2011 income limits used to designate DDAs are based on these metropolitan statistical area (MSA) definitions, with modifications to account for substantial differences in rental housing markets (and, in some cases, median income levels) within MSAs.

Background

The U.S. Department of the Treasury (Treasury) and its Internal Revenue Service (IRS) are authorized to interpret and enforce the provisions of the IRC, including the LIHTC found at Section 42. The Secretary of HUD is required to designate DDAs and QCTs by IRC Section 42(d)(5)(B). In order to assist in understanding HUD's mandated designation of DDAs and QCTs for use in administering IRC Section 42, a summary of the section is provided. The following summary does not purport to bind Treasury or the IRS in any way, nor does it purport to bind HUD, since HUD has authority to interpret or administer the IRC only in instances

where it receives explicit statutory delegation.

Summary of the Low-Income Housing Tax Credit

The LIHTC is a tax incentive intended to increase the availability of low-income housing. IRC Section 42 provides an income tax credit to owners of newly constructed or substantially rehabilitated low-income rental housing projects. The dollar amount of the LIHTC available for allocation by each state (credit ceiling) is limited by population. Each state is allowed a credit ceiling based on a statutory formula indicated at IRC Section 42(h)(3). States may carry forward unallocated credits derived from the credit ceiling for one year; however, to the extent such unallocated credits are not used by then, the credits go into a national pool to be redistributed to states as additional credit. State and local housing agencies allocate the state's credit ceiling among low-income housing buildings whose owners have applied for the credit. Besides IRC Section 42 credits derived from the credit ceiling, states may also provide IRC Section 42 credits to owners of buildings based on the percentage of certain building costs financed by tax-exempt bond proceeds. Credits provided under the tax-exempt bond ''volume cap'' do not reduce the credits available from the credit ceiling.

The credits allocated to a building are based on the cost of units placed in service as low-income units under particular minimum occupancy and maximum rent criteria. In general, a building must meet one of two thresholds to be eligible for the LIHTC: (1) 20 percent of the units must be rent-restricted and occupied by tenants with incomes no higher than 50 percent of the Area Median Gross Income (AMGI), or (2) 40 percent of the units must be rent-restricted and occupied by tenants with incomes no higher than 60 percent of AMGI. The term ''rent-restricted'' means that gross rent, including an allowance for tenant-paid utilities, cannot exceed 30 percent of the tenant's imputed income limitation (*i.e.,* 50 percent or 60 percent of AMGI). The rent and occupancy thresholds remain in effect for at least 15 years, and building owners are required to enter into agreements to maintain the low-income character of the building for at least an additional 15 years.

The LIHTC reduces income tax liability dollar-for-dollar. It is taken annually for a term of 10 years and is intended to yield a present value of either: (1) 70 percent of the ''qualified basis'' for new construction or substantial rehabilitation expenditures that are not federally subsidized (as defined in Section 42(i)(2)), or (2) 30 percent of the qualified basis for the cost of acquiring certain existing buildings or projects that are federally subsidized. The actual credit rates are adjusted monthly for projects placed in service after 1987 under procedures specified in IRC Section 42. Individuals can use the credits up to a deduction equivalent of $25,000 (the actual maximum amount of credit that an individual can claim depends on the individual's marginal tax rate). For buildings placed in service after December 31, 2007, individuals can use the credits against the alternative minimum tax. Corporations, other than S or personal service corporations, can use the credits against ordinary income tax, and, for buildings placed in service after December 31, 2007, against the alternative minimum tax. These corporations also can deduct losses from the project.

The qualified basis represents the product of the building's ''applicable fraction'' and its ''eligible basis.'' The applicable fraction is based on the number of low-income units in the building as a percentage of the total number of units, or based on the floor space of low-income units as a percentage of the total floor space of residential units in the building. The eligible basis is the adjusted basis attributable to acquisition, rehabilitation, or new construction costs (depending on the type of LIHTC involved). These costs include amounts chargeable to a capital account that are incurred prior to the end of the first taxable year in which the qualified low-income building is placed in service or, at the election of the taxpayer, the end of the succeeding taxable year. In the case of buildings located in designated DDAs or designated QCTs, eligible basis can be increased up to 130 percent from what it would otherwise be. This means that the available credits also can be increased by up to 30 percent. For example, if a 70-percent credit is available, it effectively could be increased to as much as 91 percent.

IRC Section 42 defines a DDA as any area designated by the Secretary of HUD as an area that has high construction, land, and utility costs relative to the AMGI. All designated DDAs in metropolitan areas (taken together) may not contain more than 20 percent of the aggregate population of all metropolitan areas, and all designated areas not in metropolitan areas may not contain more than 20 percent of the aggregate population of all nonmetropolitan areas.

IRC Section 42(d)(5)(B)(v) allows states to award an increase in basis up to 30 percent to buildings located outside of federally designated DDAs and QCTs if the increase is necessary to make the building financially feasible. This state discretion applies only to buildings allocated credits under the state housing credit ceiling and is not permitted for buildings receiving credits in connection with tax-exempt bonds. Rules for such designations shall be set forth in the LIHTC-allocating agencies' qualified allocation plans (QAPs).

Explanation of HUD Designation Methodology

A. Difficult Development Areas

In developing the list of DDAs, HUD compared housing costs with incomes. HUD used 2010 census population for metropolitan areas, 2000 census population data for nonmetropolitan areas, and the MSA definitions, as published in OMB Bulletin No. 09–01 on November 20, 2008, with modifications, as described below. In keeping with past practice of basing the coming year's DDA designations on data from the preceding year, the basis for these comparisons is the FY 2011 HUD income limits for very low-income households (very low-income limits, or VLILs), which are based on 50 percent of AMGI, and final FY 2011 FMRs used for the Housing Choice Voucher (HCV) program. In formulating the FY 2011 FMRs and VLILs, HUD modified the current OMB definitions of MSAs to account for substantial differences in rents among areas within each new MSA that were in different FMR areas under definitions used in prior years. HUD formed these ''HUD Metro FMR Areas'' (HMFAs) in cases where one or more of the parts of newly defined MSAs that previously were in separate FMR areas had 2000 census-based 40th-percentile recent-mover rents that differed, by 5 percent or more, from the same statistic calculated at the MSA level. In addition, a few HMFAs were formed on the basis of very large differences in AMGIs among the MSA parts. All HMFAs are contained entirely within MSAs. All nonmetropolitan counties are outside of MSAs and are not broken up by HUD for purposes of setting FMRs and VLILs. (Complete details on HUD's process for determining FY 2011 FMR areas and FMRs are available at *http://www.huduser.org/portal/datasets/fmr/fmrs/docsys.html&data=fmr11.* Complete details on HUD's process for determining FY2011 income limits are available at *http://www.huduser.org/portal/datasets/il/il11/index.html.*)

HUD's unit of analysis for designating metropolitan DDAs, therefore, consists

of: entire MSAs, in cases where these were not broken up into HMFAs for purposes of computing FMRs and VLILs; and HMFAs within the MSAs that were broken up for such purposes. Hereafter in this notice, the unit of analysis for designating metropolitan DDAs will be called the HMFA, and the unit of analysis for nonmetropolitan DDAs will be the nonmetropolitan county or county equivalent area. The procedure used in making the DDA calculations follows:

1. For each HMFA and each nonmetropolitan county, a ratio was calculated. This calculation used the final FY 2011 two-bedroom FMR and the FY 2011 four-person VLIL.

a. The numerator of the ratio, representing the development cost of housing, was the area's final FY 2011 FMR. In general, the FMR is based on the 40th-percentile gross rent paid by recent movers to live in a two-bedroom apartment. In metropolitan areas granted a FMR based on the 50th-percentile rent for purposes of improving the administration of HUD's HCV program (see 76 FR 52058), the 40th-percentile rent was used to ensure nationwide consistency of comparisons.

b. The denominator of the ratio, representing the maximum income of eligible tenants, was the monthly LIHTC income-based rent limit, which was calculated as 1/12 of 30 percent of 120 percent of the area's VLIL (where the VLIL was rounded to the nearest $50 and not allowed to exceed 80 percent of the AMGI in areas where the VLIL is adjusted upward from its 50 percent-of-AMGI base).

2. The ratios of the FMR to the LIHTC income-based rent limit were arrayed in descending order, separately, for HMFAs and for nonmetropolitan counties.

3. The DDAs are those with the highest ratios cumulative to 20 percent of the 2010 population of all metropolitan areas and 2000 population of all nonmetropolitan areas. Population totals from the 2000 census are used for the designation of nonmetropolitan areas because 2010 population totals are not uniformly available for all nonmetropolitan areas, specifically Guam and the Virgin Islands.

B. Application of Population Caps to DDA Determinations

IRC Section 42 requires the application of caps, or limitations, as noted above. The cumulative population of metropolitan DDAs cannot exceed 20 percent of the cumulative population of all metropolitan areas, and the cumulative population of nonmetropolitan DDAs cannot exceed 20 percent of the cumulative population of all nonmetropolitan areas.

In applying caps, HUD established procedures to deal with how to treat small overruns of the caps. The remainder of this section explains those procedures. In general, HUD stops selecting areas when it is impossible to choose another area without exceeding the applicable cap. The only exceptions to this policy are when the next eligible excluded area contains either a large absolute population or a large percentage of the total population, or the next excluded area's ranking ratio, as described above, was identical (to four decimal places) to the last area selected, and its inclusion resulted in only a minor overrun of the cap. Thus, for both the designated metropolitan and nonmetropolitan DDAs, there may be minimal overruns of the cap. HUD believes the designation of additional areas in the above examples of minimal overruns is consistent with the intent of the IRC. As long as the apparent excess is small due to measurement errors, some latitude is justifiable, because it is impossible to determine whether the 20 percent cap has been exceeded. Despite the care and effort involved in a Decennial Census, the Bureau of the Census and all users of the data recognize that the population counts for a given area and for the entire country are not precise. Therefore, the extent of the measurement error is unknown. There can be errors in both the numerator and denominator of the ratio of populations used in applying a 20 percent cap. In circumstances where a strict application of a 20 percent cap results in an anomalous situation, recognition of the unavoidable imprecision in the census data justifies accepting small variances above the 20 percent limit.

C. Exceptions to OMB Definitions of MSAs and Other Geographic Matters

As stated in OMB Bulletin 09–01, defining metropolitan areas:

> OMB establishes and maintains the definitions of Metropolitan * * * Statistical Areas, * * * solely for statistical purposes. * * * OMB does not take into account or attempt to anticipate any non-statistical uses that may be made of the definitions[.] In cases where * * * an agency elects to use the Metropolitan * * * Area definitions in nonstatistical programs, it is the sponsoring agency's responsibility to ensure that the definitions are appropriate for such use. An agency using the statistical definitions in a nonstatistical program may modify the definitions, but only for the purposes of that program. In such cases, any modifications should be clearly identified as deviations from the OMB statistical area definitions in order to avoid confusion with OMB's official definitions of Metropolitan * * * Statistical Areas.

Following OMB guidance, the estimation procedure for the FY 2011 FMRs incorporates the current OMB definitions of metropolitan areas based on the Core-Based Statistical Area (CBSA) standards, as implemented with 2000 Census data, but makes adjustments to the definitions, in order to separate subparts of these areas in cases where FMRs (and in a few cases, VLILs) would otherwise change significantly if the new area definitions were used without modification. In CBSAs where subareas are established, it is HUD's view that the geographic extent of the housing markets are not yet the same as the geographic extent of the CBSAs, but may approach becoming so as the social and economic integration of the CBSA component areas increases.

The geographic baseline for the new estimation procedure is the CBSA Metropolitan Areas (referred to as Metropolitan Statistical Areas or MSAs) and CBSA NonMetropolitan Counties (nonmetropolitan counties include the county components of Micropolitan CBSAs where the counties are generally assigned separate FMRs). The HUD-modified CBSA definitions allow for subarea FMRs within MSAs based on the boundaries of ''Old FMR Areas'' (OFAs) within the boundaries of new MSAs. (OFAs are the FMR areas defined for the FY 2005 FMRs. Collectively, they include the June 30, 1999, OMB definitions of MSAs and primary MSAs (old definition MSAs/primary metropolitan statistical areas (PMSAs), metropolitan counties deleted from old definition MSAs/PMSAs by HUD for FMR-setting purposes, and counties and county parts outside of old definition MSAs/PMSAs referred to as nonmetropolitan counties). Subareas of MSAs are assigned their own FMRs when the subarea 2000 census base FMR differs significantly from the MSA 2000 census base FMR (or, in some cases, where the 2000 census base AMGI differs significantly from the MSA 2000 census base AMGI). MSA subareas, and the remaining portions of MSAs after subareas have been determined, are referred to as ''HUD Metro FMR Areas (HMFAs),'' to distinguish such areas from OMB's official definition of MSAs.

In the New England states (Connecticut, Maine, Massachusetts, New Hampshire, Rhode Island, and Vermont), HMFAs are defined according to county subdivisions or minor civil divisions (MCDs), rather than county boundaries. However, since no part of an HMFA is outside an OMB-defined,

county-based MSA, all New England nonmetropolitan counties are kept intact for purposes of designating Nonmetropolitan DDAs.

For the convenience of readers of this notice, the geographical definitions of designated Metropolitan DDAs are included in the list of DDAs.

Future Designations

DDAs are designated annually as updated income and FMR data are made public. QCTs are designated periodically as new data become available, or as metropolitan area definitions change. QCTs are not redesignated for 2012 because household income distribution and poverty data is not available for 2010 census tract boundaries. The most recent data for which household income by tract is available is from the 2005–2009, 5-year American Community Survey (ACS). This data, however, was released using the 2000 census tract boundaries, while the 2010 decennial census population counts were released using the 2010 census tract boundaries. The geography of the population counts does not match the geography of the income and poverty rate information. This makes the most recent data incompatible for QCT designation, meaning HUD cannot designate QCTs in accordance with statute.

The next release of census tract-level data from the ACS, which will be the 2006–2010, 5-year data using 2010 Decennial Census boundaries, is scheduled for December 2011. At this point, all data needed to designate QCTs in accordance with statute will be tabulated to compatible geographies. Since the LIHTC program, for which QCTs are designated, operates on a calendar-year annual allocation cycle, HUD's standing practice is to designate QCTs in the fall prior to the effective date, which coincides with the calendar year. This provides lead time for the LIHTC developers and administrators to adjust plans in accordance with the revised designations. Thus, the next scheduled designation of QCTs using data released in December 2011 is the fall of 2012, for an effective date of January 1, 2013.

Effective Date

The 2012 lists of DDAs are effective:

(1) For allocations of credit after December 31, 2011; or

(2) For purposes of IRC Section 42(h)(4), if the bonds are issued and the building is placed in service after December 31, 2011.

If an area is not on a subsequent list of DDAs, the 2012 lists are effective for the area if:

(1) The allocation of credit to an applicant is made no later than the end of the 365-day period after the applicant submits a complete application to the LIHTC-allocating agency, and the submission is made before the effective date of the subsequent lists; or

(2) For purposes of IRC Section 42(h)(4), if:

(a) The bonds are issued or the building is placed in service no later than the end of the 365-day period after the applicant submits a complete application to the bond-issuing agency, and

(b) The submission is made before the effective date of the subsequent lists, provided that both the issuance of the bonds and the placement in service of the building occur after the application is submitted.

An application is deemed to be submitted on the date it is filed if the application is determined to be complete by the credit-allocating or bond-issuing agency. A ''complete application'' means that no more than *de minimis* clarification of the application is required for the agency to make a decision about the allocation of tax credits or issuance of bonds requested in the application.

In the case of a ''multiphase project,'' the DDA or QCT status of the site of the project that applies for all phases of the project is that which applied when the project received its first allocation of LIHTC. For purposes of IRC Section 42(h)(4), the DDA or QCT status of the site of the project that applies for all phases of the project is that which applied when the first of the following occurred: (a) The building(s) in the first phase were placed in service, or (b) the bonds were issued.

For purposes of this notice, a ''multiphase project'' is defined as a set of buildings to be constructed or rehabilitated under the rules of the LIHTC and meeting the following criteria:

(1) The multiphase composition of the project (i.e., total number of buildings and phases in project, with a description of how many buildings are to be built in each phase and when each phase is to be completed, and any other information required by the agency) is made known by the applicant in the first application of credit for any building in the project, and that applicant identifies the buildings in the project for which credit is (or will be) sought;

(2) The aggregate amount of LIHTC applied for on behalf of, or that would eventually be allocated to, the buildings on the site exceeds the one-year limitation on credits per applicant, as defined in the Qualified Allocation Plan (QAP) of the LIHTC-allocating agency, or the annual per-capita credit authority of the LIHTC allocating agency, and is the reason the applicant must request multiple allocations over 2 or more years; and

(3) All applications for LIHTC for buildings on the site are made in immediately consecutive years.

Members of the public are hereby reminded that the Secretary of Housing and Urban Development, or the Secretary's designee, has sole legal authority to designate DDAs and QCTs, by publishing lists of geographic entities as defined by, in the case of DDAs, the several states and the governments of the insular areas of the United States and, in the case of QCTs, by the Census Bureau; and to establish the effective dates of such lists. The Secretary of the Treasury, through the IRS thereof, has sole legal authority to interpret, and to determine and enforce compliance with the IRC and associated regulations, including **Federal Register** notices published by HUD for purposes of designating DDAs and QCTs. Representations made by any other entity as to the content of HUD notices designating DDAs and QCTs that do not precisely match the language published by HUD should not be relied upon by taxpayers in determining what actions are necessary to comply with HUD notices.

The designations of ''Qualified Census Tracts'' under IRC Section 42, published October 6, 2009 (74 FR 51304), remain in effect. The above language regarding 2012 and subsequent designations of DDAs also applies to the designations of QCTs published October 6, 2009 (74 FR 51304) and to subsequent designations of QCTs.

Interpretive Examples of Effective Date

For the convenience of readers of this notice, interpretive examples are provided below to illustrate the consequences of the effective date in areas that gain or lose DDA status. The examples covering DDAs are equally applicable to QCT designations.

(Case A)

Project A is located in a 2012 DDA that is NOT a designated DDA in 2013. A complete application for tax credits for Project A is filed with the allocating agency on November 15, 2012. Credits are allocated to Project A on October 30, 2013. Project A is eligible for the increase in basis accorded a project in a 2012 DDA because the application was filed BEFORE January 1, 2013 (the assumed effective date for the 2013 DDA lists), and because tax credits were

allocated no later than the end of the 365-day period after the filing of the complete application for an allocation of tax credits.

(Case B)

Project B is located in a 2012 DDA that is NOT a designated DDA in 2013 or 2014. A complete application for tax credits for Project B is filed with the allocating agency on December 1, 2012. Credits are allocated to Project B on March 30, 2014. Project B is not eligible for the increase in basis accorded a project in a 2012 DDA because, although the application for an allocation of tax credits was filed before January 1, 2013 (the assumed effective date of the 2013 DDA lists), the tax credits were allocated later than the end of the 365-day period after the filing of the complete application.

(Case C)

Project C is located in a 2012 DDA that was not a DDA in 2011. Project C was placed in service on November 15, 2011. A complete application for tax-exempt bond financing for Project C is filed with the bond-issuing agency on January 15, 2012. The bonds that will support the permanent financing of Project C are issued on September 30, 2012. Project C is not eligible for the increase in basis otherwise accorded a project in a 2012 DDA, because the project was placed in service before January 1, 2012.

(Case D)

Project D is located in an area that is a DDA in 2012, but is not a DDA in 2013. A complete application for tax-exempt bond financing for Project D is filed with the bond-issuing agency on October 30, 2012. Bonds are issued for Project D on April 30, 2013, but Project D is not placed in service until January 30, 2014. Project D is eligible for the increase in basis available to projects located in 2012 DDAs because: (1) One of the two events necessary for triggering the effective date for buildings described in Section 42(h)(4)(B) of the IRC (the two events being bonds issued and buildings placed in service) took place on April 30, 2013, within the 365-day period after a complete application for tax-exempt bond financing was filed, (2) the application was filed during a time when the location of Project D was in a DDA, and (3) both the issuance of the bonds and placement in service of Project D occurred after the application was submitted.

(Case E)

Project E is a multiphase project located in a 2012 DDA that is not a designated DDA in 2013. The first phase of Project E received an allocation of credits in 2012, pursuant to an application filed March 15, 2012, which describes the multiphase composition of the project. An application for tax credits for the second phase Project E is filed with the allocating agency by the same entity on March 15, 2013. The second phase of Project E is located on a contiguous site. Credits are allocated to the second phase of Project E on October 30, 2013. The aggregate amount of credits allocated to the two phases of Project E exceeds the amount of credits that may be allocated to an applicant in one year under the allocating agency's QAP and is the reason that applications were made in multiple phases. The second phase of Project E is, therefore, eligible for the increase in basis accorded a project in a 2012 DDA, because it meets all of the conditions to be a part of a multiphase project.

(Case F)

Project F is a multiphase project located in a 2012 DDA that is not a designated DDA in 2013. The first phase of Project F received an allocation of credits in 2012, pursuant to an application filed March 15, 2012, which does not describe the multiphase composition of the project. An application for tax credits for the second phase of Project F is filed with the allocating agency by the same entity on March 15, 2014. Credits are allocated to the second phase of Project F on October 30, 2014. The aggregate amount of credits allocated to the two phases of Project F exceeds the amount of credits that may be allocated to an applicant in one year under the allocating agency's QAP. The second phase of Project F is, therefore, not eligible for the increase in basis accorded a project in a 2012 DDA, since it does not meet all of the conditions for a multiphase project, as defined in this notice. The original application for credits for the first phase did not describe the multiphase composition of the project. Also, the application for credits for the second phase of Project F was not made in the year immediately following the first phase application year.

Request for Public Comment on Designating DDAs Using Small Area FMRs in Metropolitan Areas

HUD is considering a major policy change in the method of designating metropolitan DDAs beginning with the 2013 designations. Rather than using FMRs established for HUD Metropolitan FMR Areas as the measure of ''construction, land, and utility costs relative to area median gross income,'' HUD would use ''Small Area FMRs'' (SAFMRs) defined at the ZIP Code level within metropolitan areas. In general, HUD estimates SAFMRs by multiplying the ratio of ZIP–Code area to metropolitan-area median gross rent by the metropolitan-area FMRs (a complete description of how SAFMRs are estimated was published in a **Federal Register** notice at 75 FR 27808–12 (May 18, 2010) and is available at: *http://www.huduser.org/portal/datasets/_fmr/fmr2010f/Small_Area_FMRs.pdf*). HUD would use the same income measure as used in the current metropolitan DDA designation method, the HUD income limits for very low-income households, or VLILs, estimated at the HUD Metropolitan FMR Area level, which are used to determine LIHTC and tax-exempt bond-financed project maximum rents and tenant income limits.

HUD would otherwise designate Small Area Difficult Development Areas (SADDAs) in the same way as it designates metropolitan DDAs as described above in this notice, except that the unit of analysis is the metropolitan ZIP Code instead of the HUD Metropolitan FMR Area. Thus, the population-weighted 20 percent of ZIP Codes with the highest ratios of SAFMR to metropolitan VLIL would be designated as DDAs.

HUD has available an evaluative list of the 2,118 metropolitan ZIP Codes that would be designated Small Area DDAs based on the data available to HUD at the time of this publication. The main piece of currently missing data that HUD would have for a 2013 designation of SADDAs is the 2010 Decennial Census population counts for ZIP Codes. Thus, HUD used the ZIP Code-to-metropolitan area rent relationships and ZIP Code populations from the 2000 Decennial Census to create the evaluative list of SADDAs. In general, the metropolitan areas designated DDAs in this notice have many, but not all, ZIP Codes designated as SADDAs, while a number of metropolitan areas that have never been DDAs in the history of the program get one or more SADDAs. Under SADDAs, the additional subsidy available under section 42 would be limited to the higher opportunity areas of high-cost rental markets, and to the highest opportunity areas of otherwise lower-cost rental markets.

HUD seeks comments on the relative merits of SADDAs versus existing metropolitan DDA policy in advancing HUD's goals of meeting the need for quality affordable rental homes and utilizing housing as a platform for improving quality of life.

Findings and Certifications

Environmental Impact

In accordance with 40 CFR 1508.4 of the regulations of the Council on Environmental Quality and 24 CFR 50.19(c)(6) of HUD's regulations, the policies and procedures contained in this notice provide for the establishment of fiscal requirements or procedures that do not constitute a development decision affecting the physical condition of specific project areas or building sites. Therefore, they are categorically excluded from the requirements of the National Environmental Policy Act, except for extraordinary circumstances, and no Finding of No Significant Impact is required.

Federalism Impact

Executive Order 13132 (entitled ''Federalism'') prohibits an agency from publishing any policy document that has federalism implications if the document either imposes substantial direct compliance costs on state and local governments and is not required by statute, or the document preempts state law, unless the agency meets the consultation and funding requirements of section 6 of the executive order. This notice merely designates DDAs as required under Section 42 of the IRC, as amended, for the use by political subdivisions of the states in allocating the LIHTC. This notice also details the technical methodology used in making such designations. As a result, this notice is not subject to review under the order.

Dated: October 20, 2011.

Raphael W. Bostic,

Assistant Secretary for Policy Development and Research.

[FR Doc. 2011–27817 Filed 10–26–11; 8:45 am]

BILLING CODE 4210–67–P

DEPARTMENT OF THE INTERIOR

Bureau of Land Management

[LLAZ910000.L14300000.ET0000. LXSIURAM0000 241A; AZA–35138]

Notice of Availability of the Northern Arizona Proposed Withdrawal Final Environmental Impact Statement

AGENCY: Bureau of Land Management, Interior.

ACTION: Notice of availability.

SUMMARY: In accordance with the National Environmental Policy Act (NEPA) of 1969, as amended, and the Federal Land Policy and Management Act (FLPMA), the Bureau of Land Management (BLM) has prepared a Final Environmental Impact Statement (EIS) for the Northern Arizona Proposed Withdrawal and by this notice is announcing its availability.

DATES: The Final EIS will be distributed and made available to the public for a minimum of 30 days following the publication of a Notice of Availability in the **Federal Register** by the Environmental Protection Agency (EPA). As the decision maker in this matter, the Secretary of the Interior will not issue a final decision on the proposal for a minimum of 30 days after the date that the EPA publishes this notice in the **Federal Register.**

ADDRESSES: Copies of the Northern Arizona Proposed Withdrawal Final EIS are available for public inspection at: Bureau of Land Management, Arizona Strip District Office, 345 East Riverside Drive, St. George, Utah 84790; Bureau of Land Management, Arizona State Office, One North Central Avenue, Suite 800, Phoenix, Arizona 85004–4427; and U.S. Forest Service, Kaibab National Forest, 800 South 6th Street, Williams, Arizona 86046. Interested persons may also review the Final EIS on the Internet at *http://www.blm.gov/az/st/en/prog/mining/timeout.html.*

FOR FURTHER INFORMATION CONTACT: Chris Horyza, Project Manager, Bureau of Land Management, Arizona State Office, One North Central Avenue, Suite 800, Phoenix, Arizona 85004–4427, (602) 417–9446, e-mail *chris_horyza@blm.gov.* Persons who use a telecommunications device for the deaf (TDD) may call the Federal Information Relay Service (FIRS) at (800) 877–8339 to contact the above individual during normal business hours. The service is available 24 hours a day, 7 days a week, to leave a message or question with the above individual. You will receive a reply during normal business hours.

SUPPLEMENTARY INFORMATION: On July 21, 2009, the U.S. Department of the Interior published notice of a proposal to withdraw (Proposed Withdrawal) approximately 1 million acres of Federal locatable minerals in northern Arizona from location and entry under the Mining Law of 1872, (30 U.S.C. 22–54) (Mining Law), subject to valid existing rights, by the Secretary of the Interior (Secretary).

Under Section 204 of FLPMA, publication of the **Federal Register** notice of the Proposed Withdrawal had the effect of segregating the lands involved for up to 2 years from the location and entry of new mining claims, subject to valid existing rights. For detailed information pertaining to the location of the Proposed Withdrawal, refer to the map dated August 11, 2011, posted on the Internet at: *http://www.blm.gov/az/st/en/prog/mining/timeout.html.* This map is also on file at the Arizona Strip District Office at the address above and can be viewed there upon request. Detailed legal descriptions of each withdrawal alternative are included as Appendix C in the Northern Arizona Proposed Withdrawal Final EIS. On June 27, 2011, the Secretary published a Public Land Order withdrawing, under the Secretary's emergency withdrawal authority in Section 204(e) of FLPMA, the same Federal lands from location and entry under the Mining Law, subject to valid existing rights. The emergency withdrawal was effective on July 21, 2011, and expires on January 20, 2012. The BLM has completed an Environmental Analysis of the Proposed Withdrawal in accordance with NEPA.

The Proposed Action analyzed in the Final EIS is the withdrawal of 1,006,545 acres of Federal lands near Grand Canyon National Park from location and entry under the Mining Law for a period of 20 years. This has also been selected as the Preferred Alternative. The purpose of the action is to protect the natural, cultural, and social resources in the Grand Canyon watershed from the possible adverse effects of the reasonably foreseeable locatable mineral exploration and mining that could occur in the area proposed for withdrawal.

The need for action is based on a history of hardrock mining activities in the Grand Canyon watershed dating back to the 1860s. In some cases, these mining activities have left lasting impacts within the watershed, primarily associated with older copper and uranium mines. These historical impacts and the recent increase in the number and extent of mining claims located in the area, particularly for uranium, have raised concerns that future hardrock mining activities in the Grand Canyon watershed could result in adverse effects to resources.

Public scoping for this project began on August 26, 2009 (74 FR 43152), with publication of a Notice of Intent in the **Federal Register**, and closed on October 30, 2009. During that time, 83,525 comment letters were received. Important issues identified during scoping include:

- Change in geologic conditions and availability of uranium resources;
- Dewatering of perched aquifers and changes in water availability in deep aquifers;
- Contamination of both ground and surface water;

• Effects to endangered, threatened, and special status plants and animal species;
• Visual intrusions to Grand Canyon National Park visitors;
• Noise disruptions to Grand Canyon National Park visitors;
• Effects to cultural resources and Traditional Cultural Properties;
• Potential public health effects due to exposure to uranium; and
• Effects to the local, regional, or national economy.

A Draft EIS was released for public review and comment on February 18, 2011. The Draft EIS considered these issues in its analysis of four alternatives. Alternative A was the No Action Alternative, under which no lands would be withdrawn and mineral exploration and mining would continue throughout the Proposed Withdrawal area in accordance with existing laws, regulations, and land use plans. Alternative B, which was the Proposed Action, was a withdrawal for 20 years, subject to valid existing rights, of approximately 1,010,776 acres in three parcels from location and entry under the 1872 Mining Law, but not the mineral leasing, geothermal leasing, mineral materials, or public land laws. Two of the three parcels are north of Grand Canyon National Park on BLM-managed Arizona Strip lands and the North Kaibab Ranger District of the Kaibab National Forest, and the remaining parcel is south of the Grand Canyon on the Tusayan Ranger District of the Kaibab National Forest. Alternative C was a withdrawal of approximately 652,986 acres from the 1872 Mining Law for 20 years, subject to valid existing rights. This alternative would withdraw the largest contiguous area identified on resource location maps with concentrations of cultural, hydrologic, recreational, visual, and biological resources which could be adversely affected by locatable mineral exploration and mining. As with the Proposed Action, Alternative C would not prevent any other development under the mineral leasing, geothermal leasing, mineral materials, or public land laws. Alternative D was a withdrawal of 300,681 acres from the 1872 Mining Law for 20 years, subject to valid existing rights. This alternative would withdraw the contiguous area identified on resource location maps where there is the highest concentration of overlapping cultural, hydrologic, recreational, visual, and biological resources, which could be adversely affected by locatable mineral exploration and mining. As with the Proposed Action, Alternative D would not prevent any other development under the mineral leasing, geothermal leasing, mineral materials, or public land laws.

The Draft EIS analyzed the potential effects of the alternatives on resources within, and in the vicinity of, the potential withdrawal areas as well as within, and in the vicinity of, the Grand Canyon National Park. Analysis was conducted for potential effects to air quality, geology and minerals, ground and surface water resources, soil resources, vegetation resources, fish and wildlife in general, special status plant and animal species, including those listed as threatened or endangered, visual resources, soundscapes, cultural resources, American Indian resources, wilderness, recreation, social, and economic conditions.

The public comment period was originally set for 45 days, and was subsequently extended for 30 days, resulting in a 75-day comment period concluding on May 4, 2011. During the public comment period, 296,339 comment submittals were received. From these comment letters, approximately 1,400 individual substantive comments were extracted.

In accordance with Council on Environmental Quality regulations (40 CFR 1503.4) and BLM procedures in Handbook H–1790–1, substantive public comments have been responded to in the Final EIS and appropriate revisions have been made. Chapter 5 of the Final EIS contains details of the public review and comment process and responses to substantive comments received during the public comment period.

Revisions to the EIS from Draft to Final were primarily editorial or to improve the document's clarity.

Changes to the EIS Include

• Identification of the Proposed Action as the Preferred Alternative;
• An adjustment to the boundary of the North Parcel to exclude the Kanab Creek Wilderness Area, which is already withdrawn by Congress. Acreage calculations were adjusted in each withdrawal alternative to account for the boundary change. In the Final EIS, the North Parcel has been adjusted to 549,995 acres that would be withdrawn in Alternative B, 351,965 acres that would be withdrawn in Alternative C, and 102,581 acres that would be withdrawn in Alternative D;
• An adjustment to the South Parcel Boundary excluding 40 acres within the Navajo Nation that was erroneously included. In addition, more current Federal mineral data may also cause adjusted acreage figures. Acreage calculations were adjusted for Alternative B in the Final EIS to 322,096 acres that would be withdrawn, 206,603 acres that would be withdrawn in Alternative C, and 133,273 acres that would be withdrawn in Alternative D;
• Due to the above boundary changes and acreage recalculations, the total acres of Federal minerals that would be withdrawn in each withdrawal alternative has changed. Alternative B would withdraw a total of 1,006,545, Alternative C would withdraw a total of 648,802, and Alternative D would withdraw a total of 292,086 acres;
• Detailed legal descriptions of the withdrawal alternatives by Parcel have been included in Appendix C;
• Numerous edits to improve the clarity of the analysis; and
• A further refined economic analysis.

Twelve agencies and two American Indian tribes have valid Cooperating Agency agreements with the BLM, including the U.S. Forest Service, Kaibab National Forest; National Park Service, Grand Canyon National Park; U.S. Fish and Wildlife Service; U.S. Geological Survey; Arizona Game and Fish Department; Arizona Geological Survey; Arizona State Lands Department; Hualapai Tribe; Kaibab Band of Paiute Indians; Coconino County, Arizona; Mohave County, Arizona; Kane County, Utah; San Juan County, Utah; and Washington County, Utah.

Comments on the Draft EIS received from the public and internal review were considered and incorporated as appropriate into the Final EIS. Public comments resulted in the addition of clarifying text and some refined analysis.

Authority: 40 CFR 1506.6, 40 CFR 1506.10, 43 CFR 2091.5.

Raymond Suazo,

Acting Arizona State Director.

[FR Doc. 2011–27752 Filed 10–26–11; 8:45 am]

BILLING CODE 4310–32–P

INTERNATIONAL TRADE COMMISSION

[Investigation Nos. 701–TA–481 and 731–TA–1190 (Preliminary)]

Crystalline Silicon Photovoltaic Cells and Modules From China; Institution of Antidumping and Countervailing Duty Investigations and Scheduling of Preliminary Phase Investigations

AGENCY: United States International Trade Commission.

ACTION: Notice.

SUMMARY: The Commission hereby gives notice of the institution of investigations

and commencement of preliminary phase antidumping and countervailing duty investigations Nos. 701–TA–481 and 731–TA–1190 (Preliminary) under sections 703(a) and 733(a) of the Tariff Act of 1930 (19 U.S.C. 1671b(a) and 1673b(a)) (the Act) to determine whether there is a reasonable indication that an industry in the United States is materially injured or threatened with material injury, or the establishment of an industry in the United States is materially retarded, by reason of imports from China of crystalline silicon photovoltaic cells and modules, provided for in subheadings 8541.40.60 (statistical reporting numbers 8541.40.6020 or 8541.40.6030) of the Harmonized Tariff Schedule of the United States, that are alleged to be sold in the United States at less than fair value and alleged to be subsidized by the Government of China. These goods may also be imported as parts or subassemblies of goods provided for in subheadings 8501.61.00.00 or 8507.20.80 of the Harmonized Tariff Schedule of the United States. Unless the Department of Commerce extends the time for initiation pursuant to sections 702(c)(1)(B) or 732(c)(1)(B) of the Act (19 U.S.C. 1671a(c)(1)(B) or 1673a(c)(1)(B)), the Commission must reach a preliminary determination in antidumping and countervailing duty investigations in 45 days, or in this case by December 5, 2011. The Commission's views are due at Commerce within five business days thereafter, or by December 12, 2011.

For further information concerning the conduct of these investigations and rules of general application, consult the Commission's Rules of Practice and Procedure, part 201, subparts A through E (19 CFR part 201), and part 207, subparts A and B (19 CFR part 207).

DATES: *Effective Date:* October 19, 2011.

FOR FURTHER INFORMATION CONTACT: Christopher Cassise (202–708–5408), Office of Investigations, U.S. International Trade Commission, 500 E Street, SW., Washington, DC 20436. Hearing-impaired persons can obtain information on this matter by contacting the Commission's TDD terminal on 202–205–1810. Persons with mobility impairments who will need special assistance in gaining access to the Commission should contact the Office of the Secretary at 202–205–2000. General information concerning the Commission may also be obtained by accessing its internet server (*http://www.usitc.gov*). The public record for these investigations may be viewed on the Commission's electronic docket (EDIS) at *http://edis.usitc.gov.*

SUPPLEMENTARY INFORMATION:

Background. These investigations are being instituted in response to a petition filed on October 19, 2011, by Solar World Industries America, Hillsboro, OR.

Participation in the investigations and public service list. Persons (other than petitioners) wishing to participate in the investigations as parties must file an entry of appearance with the Secretary to the Commission, as provided in sections 201.11 and 207.10 of the Commission's rules, not later than seven days after publication of this notice in the **Federal Register**. Industrial users and (if the merchandise under investigation is sold at the retail level) representative consumer organizations have the right to appear as parties in Commission antidumping and countervailing duty investigations. The Secretary will prepare a public service list containing the names and addresses of all persons, or their representatives, who are parties to these investigations upon the expiration of the period for filing entries of appearance.

Limited disclosure of business proprietary information (BPI) under an administrative protective order (APO) and BPI service list. Pursuant to section 207.7(a) of the Commission's rules, the Secretary will make BPI gathered in these investigations available to authorized applicants representing interested parties (as defined in 19 U.S.C. 1677(9)) who are parties to the investigations under the APO issued in the investigations, provided that the application is made not later than seven days after the publication of this notice in the **Federal Register**. A separate service list will be maintained by the Secretary for those parties authorized to receive BPI under the APO.

Conference. The Commission's Director of Investigations has scheduled a conference in connection with these investigations for 9:30 a.m. on November 8, 2011, at the U.S. International Trade Commission Building, 500 E Street, SW., Washington, DC. Requests to appear at the conference should be filed with the Office of the Secretary (*William.bishop@usitc.gov* and *Sharon.bellamy@usitc.gov*) on or before November 4, 2011. Parties in support of the imposition of countervailing duty and antidumping duties in these investigations and parties in opposition to the imposition of such duties will each be collectively allocated one hour within which to make an oral presentation at the conference. A nonparty who has testimony that may aid the Commission's deliberations may request permission to present a short statement at the conference.

Written submissions.—As provided in sections 201.8 and 207.15 of the Commission's rules at the date of this notice, any person may submit to the Commission on or before November 14, 2011, a written brief containing information and arguments pertinent to the subject matter of the investigations. Parties may file written testimony in connection with their presentation at the conference no later than three days before the conference. If briefs or written testimony contain BPI, they must conform with the requirements of sections 201.6, 207.3, and 207.7 of the Commission's rules. The Commission's rules do not authorize filing of submissions with the Secretary by facsimile or electronic means, except to the extent permitted by section 201.8 of the Commission's rules, as amended, 67 FR 68036 (November 8, 2002). Even where electronic filing of a document is permitted, certain documents must also be filed in paper form, as specified in II (C) of the Commission's Handbook on Electronic Filing Procedures, 67 FR 68168, 68173 (November 8, 2002). Please be aware that the Commission's rules with respect to electronic filing have been amended. The amendments will take effect on November 7, 2011. *See* 74 FR 61937 (Oct. 6, 2011). For those materials submitted to the Commission in this proceeding on and after the effective date of these amendments please refer to 74 FR 61937 (Oct. 6, 2011) and the newly revised Commission's Handbook on E-Filing.

In accordance with sections 201.16(c) and 207.3 of the rules, each document filed by a party to the investigations must be served on all other parties to the investigations (as identified by either the public or BPI service list), and a certificate of service must be timely filed. The Secretary will not accept a document for filing without a certificate of service.

Authority: These investigations are being conducted under authority of title VII of the Tariff Act of 1930; this notice is published pursuant to section 207.12 of the Commission's rules.

By order of the Commission.

James R. Holbein,

Secretary to the Commission.

[FR Doc. 2011–27761 Filed 10–26–11; 8:45 am]

BILLING CODE 7020–02–P

INTERNATIONAL TRADE COMMISSION

[DN 2849]

Certain Projectors With Controlled-Angle Optical Retarders, Components Thereof, and Products Containing Same; Receipt of Complaint; Solicitation of Comments Relating to the Public Interest

AGENCY: U.S. International Trade Commission.

ACTION: Notice.

SUMMARY: Notice is hereby given that the U.S. International Trade Commission has received a complaint entitled *In Re Certain Projectors with Controlled-Angle Optical Retarders, Components Thereof, And Products Containing Same,* DN 2849; the Commission is soliciting comments on any public interest issues raised by the complaint.

FOR FURTHER INFORMATION CONTACT: James R. Holbein, Secretary to the Commission, U.S. International Trade Commission, 500 E Street, SW., Washington, DC 20436, telephone (202) 205–2000. The public version of the complaint can be accessed on the Commission's electronic docket (EDIS) at *http://edis.usitc.gov,* and will be available for inspection during official business hours (8:45 a.m. to 5:15 p.m.) in the Office of the Secretary, U.S. International Trade Commission, 500 E Street, SW., Washington, DC 20436, telephone (202) 205–2000.

General information concerning the Commission may also be obtained by accessing its Internet server (*http://www.usitc.gov*). The public record for this investigation may be viewed on the Commission's electronic docket (EDIS) at *http://edis.usitc.gov.* Hearing-impaired persons are advised that information on this matter can be obtained by contacting the Commission's TDD terminal on (202) 205–1810.

SUPPLEMENTARY INFORMATION: The Commission has received a complaint filed on behalf of Compound Photonics Ltd. and Compound Photonics U.S. Corporation on October 21, 2011. The complaint alleges violations of section 337 of the Tariff Act of 1930 (19 U.S.C. 1337) in the importation into the United States, the sale for importation, and the sale within the United States after importation of certain projectors with controlled-angle optical retarders, components thereof, and products containing same. The complaint names as respondents Sony Corporation of Japan; Sony Corporation of America of New York, NY; and Sony Electronics Inc. of San Diego, CA.

The complainant, proposed respondents, other interested parties, and members of the public are invited to file comments, not to exceed five pages in length, on any public interest issues raised by the complaint. Comments should address whether issuance of an exclusion order and/or a cease and desist order in this investigation would negatively affect the public health and welfare in the United States, competitive conditions in the United States economy, the production of like or directly competitive articles in the United States, or United States consumers.

In particular, the Commission is interested in comments that:

(i) Explain how the articles potentially subject to the orders are used in the United States;

(ii) Identify any public health, safety, or welfare concerns in the United States relating to the potential orders;

(iii) Indicate the extent to which like or directly competitive articles are produced in the United States or are otherwise available in the United States, with respect to the articles potentially subject to the orders; and

(iv) Indicate whether Complainant, Complainant's licensees, and/or third party suppliers have the capacity to replace the volume of articles potentially subject to an exclusion order and a cease and desist order within a commercially reasonable time.

Written submissions must be filed no later than by close of business, five business days after the date of publication of this notice in the **Federal Register**. There will be further opportunities for comment on the public interest after the issuance of any final initial determination in this investigation.

Persons filing written submissions must file the original document and 12 true copies thereof on or before the deadlines stated above with the Office of the Secretary. Submissions should refer to the docket number (''Docket No. 2849'') in a prominent place on the cover page and/or the first page. The Commission's rules authorize filing submissions with the Secretary by facsimile or electronic means only to the extent permitted by section 201.8 of the rules (see Handbook for Electronic Filing Procedures, *http://www.usitc.gov/secretary/fed_reg_notices/rules/documents/handbook_on_electronic_filing.pdf.* Persons with questions regarding electronic filing should contact the Secretary (202) 205–2000)).

Any person desiring to submit a document to the Commission in confidence must request confidential treatment. All such requests should be directed to the Secretary to the Commission and must include a full statement of the reasons why the Commission should grant such treatment. *See* 19 CFR 201.6. Documents for which confidential treatment by the Commission is properly sought will be treated accordingly. All nonconfidential written submissions will be available for public inspection at the Office of the Secretary.

This action is taken under the authority of section 337 of the Tariff Act of 1930, as amended (19 U.S.C. 1337), and of sections 201.10 and 210.50(a)(4) of the Commission's Rules of Practice and Procedure (19 CFR 201.10, 210.50(a)(4)).

Issued: October 24, 2011.

By order of the Commission.

James R. Holbein,

Secretary to the Commission.

[FR Doc. 2011–27800 Filed 10–26–11; 8:45 am]

BILLING CODE 7020–02–P

INTERNATIONAL TRADE COMMISSION

[DN 2850]

Certain Automotive GPS Navigation Systems, Components Thereof, and Products Containing Same; Receipt of Complaint; Solicitation of Comments Relating to the Public Interest

AGENCY: U.S. International Trade Commission.

ACTION: Notice.

SUMMARY: Notice is hereby given that the U.S. International Trade Commission has received a complaint entitled *In Re Certain Automotive GPS Navigation Systems, Components Thereof, And Products Containing Same,* DN 2850; the Commission is soliciting comments on any public interest issues raised by the complaint.

FOR FURTHER INFORMATION CONTACT: James R. Holbein, Secretary to the Commission, U.S. International Trade Commission, 500 E Street, SW., Washington, DC 20436, telephone (202) 205–2000. The public version of the complaint can be accessed on the Commission's electronic docket (EDIS) at *http://edis.usitc.gov,* and will be available for inspection during official business hours (8:45 a.m. to 5:15 p.m.) in the Office of the Secretary, U.S. International Trade Commission, 500 E Street, SW., Washington, DC 20436, telephone (202) 205–2000.

General information concerning the Commission may also be obtained by accessing its Internet server (*http://www.usitc.gov*). The public record for this investigation may be viewed on the Commission's electronic docket (EDIS) at *http://www.edis.usitc.gov.* Hearing-impaired persons are advised that information on this matter can be obtained by contacting the Commission's TDD terminal on (202) 205–1810.

SUPPLEMENTARY INFORMATION: The Commission has received a complaint filed on behalf of Beacon Navigation Gmbh on October 21, 2011. The complaint alleges violations of section 337 of the Tariff Act of 1930 (19 U.S.C. 1337) in the importation into the United States, the sale for importation, and the sale within the United States after importation of certain automotive gps navigation systems, components thereof, and products containing same. The complaint names as respondents Audi AG of Germany; Audi of America, Inc. of Auburn Hills, MI; Audi of America, LLC of Herndon, VA; Bayerische Motoren Werke AG of Germany; BMW of North America, LLC of Woodcliff Lake, NJ; BMW Manufacturing Co., LLC of Greer, SC; Chrysler Group LLC of Auburn Hills, MI; Ford Motor Company of Dearborn, MI; General Motors Company of Detroit, MI; Honda Motor Co. Ltd of Japan; Honda North America, Inc. of Torrance, CA; America Honda Motor Co., Inc. of Torrance, CA; Honda Manufacturing of Alabama, LLC of Lincoln, AL; Honda Manufacturing of Indiana, LLC of Greensburg, IN; Honda of America Mfg, Inc. of Marysville, OH; Hyundai Motor Company of South Korea; Hyundai Motor America of Fountain Valley, CA; Hyundai Motor Manufacturing Alabama, LLC of Montgomery, AL; Kia Motors Corp. of South Korea; Kia Motors America, Inc. of Irvine, CA; Kia Motors Manufacturing Georgia, Inc. of West Point, GA; Mazda Motor Corporation of Japan; Mazda Motor of America, Inc. of Irvine, CA; Daimler AG of Germany; Mercedes-Benz USA, LLC of Montvale, NJ; Mercedes-Benz U.S. International, Inc. of Vance, AL; Nissan Motor Co., Ltd. of Japan; Nissan North America, Inc. of Franklin, TN; Dr. Ing. h. c. F. Porsche AG of Germany; Porsche Cars North America, Inc. of Atlanta, GA; Saab Automobile AB of Sweden; Saab Cars North America, Inc. of Royal Oak, MI; Suzuki Motor Corporation of Japan; American Suzuki Motor Corporation of Brea, CA; Jaguar Land Rover North America, LLC of Mahwah, NJ; Jaguar Cars Limited of United Kingdom; Land Rover of United Kingdom; Toyota Motor Corporation of Japan; Toyota Motor North America, Inc. of Torrance, CA; Toyota Motor Sales, U.S.A., Inc. of Torrance, CA; Toyota Motor Engineering & Manufacturing North America, Inc. of Erlanger, KY; Toyota Motor Manufacturing, Indiana, Inc. of Princeton, IN; Toyota Motor Manufacturing Kentucky, Inc. of Georgetown, KY; Toyota Motor Manufacturing Mississippi, Inc. of Blue Springs, MS; Volkswagen AG of Germany; Volkswagen Group of America, Inc. of Herndon, VA; Volkswagen Group of America Chattanooga of Herndon, VA; Volvo Car Corporation of Sweden; and Volvo Cars of North America, LLC of Rockleigh, NJ.

The complainant, proposed respondents, other interested parties, and members of the public are invited to file comments, not to exceed five pages in length, on any public interest issues raised by the complaint. Comments should address whether issuance of an exclusion order and/or a cease and desist order in this investigation would negatively affect the public health and welfare in the United States, competitive conditions in the United States economy, the production of like or directly competitive articles in the United States, or United States consumers. In particular, the Commission is interested in comments that:

(i) Explain how the articles potentially subject to the orders are used in the United States;

(ii) Identify any public health, safety, or welfare concerns in the United States relating to the potential orders;

(iii) Indicate the extent to which like or directly competitive articles are produced in the United States or are otherwise available in the United States, with respect to the articles potentially subject to the orders; and

(iv) Indicate whether Complainant, Complainant's licensees, and/or third party suppliers have the capacity to replace the volume of articles potentially subject to an exclusion order and a cease and desist order within a commercially reasonable time.

Written submissions must be filed no later than by close of business, five business days after the date of publication of this notice in the **Federal Register**. There will be further opportunities for comment on the public interest after the issuance of any final initial determination in this investigation.

Persons filing written submissions must file the original document and 12 true copies thereof on or before the deadlines stated above with the Office of the Secretary. Submissions should refer to the docket number (''Docket No. 2850'') in a prominent place on the cover page and/or the first page. The Commission's rules authorize filing submissions with the Secretary by facsimile or electronic means only to the extent permitted by section 201.8 of the rules (see Handbook for Electronic Filing Procedures, *http://www.usitc.gov/secretary/fed_reg_notices/rules/documents/handbook_on_electronic_filing.pdf.* Persons with questions regarding electronic filing should contact the Secretary (202–205–2000).

Any person desiring to submit a document to the Commission in confidence must request confidential treatment. All such requests should be directed to the Secretary to the Commission and must include a full statement of the reasons why the Commission should grant such treatment. *See* 19 CFR 201.6. Documents for which confidential treatment by the Commission is properly sought will be treated accordingly. All nonconfidential written submissions will be available for public inspection at the Office of the Secretary.

This action is taken under the authority of section 337 of the Tariff Act of 1930, as amended (19 U.S.C. 1337), and of sections 201.10 and 210.50(a)(4) of the Commission's Rules of Practice and Procedure (19 CFR 201.10, 210.50(a)(4)).

Issued: October 24, 2011.

By order of the Commission.

James R. Holbein,

Secretary to the Commission.

[FR Doc. 2011–27803 Filed 10–26–11; 8:45 am]

BILLING CODE 7020–02–P

INTERNATIONAL TRADE COMMISSION

[USITC SE–11–029]

Government in the Sunshine Act Meeting Notice

AGENCY HOLDING THE MEETING: United States International Trade Commission.

TIME AND DATE: November 3, 2011 at 2 p.m.

PLACE: Room 101, 500 E Street SW., Washington, DC 20436, Telephone: (202) 205–2000.

STATUS: Open to the public.

MATTERS TO BE CONSIDERED:

1. Agendas for future meetings: none.
2. Minutes.
3. Ratification List.
4. Vote in Inv. Nos. 731–TA–624 and 625 (Third Review) (Helical Spring Lock Washers from China and Taiwan). The

Commission is currently scheduled to transmit its determinations and Commissioners' opinions to the Secretary of Commerce on or before November 18, 2011.

5. Outstanding action jackets: none.

In accordance with Commission policy, subject matter listed above, not disposed of at the scheduled meeting, may be carried over to the agenda of the following meeting.

Issued: October 24, 2011.

By order of the Commission.

William R. Bishop,

Hearings and Meetings Coordinator.

[FR Doc. 2011–27901 Filed 10–25–11; 11:15 am]

BILLING CODE 7020–02–P

DEPARTMENT OF JUSTICE

[CPCLO Order No. 003–2011]

Privacy Act of 1974; System of Records

AGENCY: Office of Professional Responsibility, United States Department of Justice.

ACTION: Modification of a system of records.

SUMMARY: Pursuant to the Privacy Act of 1974 (5 U.S.C. 552a), the United States Department of Justice (''Department'' or ''DOJ''), Office of Professional Responsibility (''OPR''), proposes to amend the system of records entitled ''Office of Professional Responsibility Record Index,'' JUSTICE/OPR–001, last published in the **Federal Register** on December 10, 1998 (63 FR 68299). The JUSTICE–OPR–001 system is maintained to provide for the resolution of allegations of misconduct made against DOJ employees and to advise complainants of the status of investigations and the results. Pursuant to 28 CFR 0.39a(9), the OPR Counsel also reviews proposals submitted by DOJ employees, in the course of their official duties, to refer to the appropriate licensing authorities apparent professional misconduct by attorneys outside DOJ, and makes such referrals where warranted. OPR is revising the categories of individuals covered by this system to include non-DOJ attorneys who are the subjects of allegations of professional misconduct which have been referred to OPR and about whom information is maintained in order to fulfill OPR's obligations under 28 CFR 0.39a(9), as well as witnesses and other individuals referenced in OPR matters. (The corresponding records have been referenced throughout the system notice where applicable.) In addition, OPR is also modifying the system by adding new routine uses and by revising several existing routine uses to reflect the current model language used by the Department.

DATES: In accordance with 5 U.S.C. 552a(e)(4) and (11), the public is given a 30-day period in which to comment. Therefore, please submit any comments by November 28, 2011.

ADDRESSES: The public, the Office of Management and Budget (OMB), and Congress are invited to submit any comments to the Department of Justice, ATTN: Privacy Analyst, Office of Privacy and Civil Liberties, Department of Justice, National Place Building, 1331 Pennsylvania Avenue, NW., Suite 1000, Washington, DC 20530–001, or by facsimile at (202) 307–0693.

FOR FURTHER INFORMATION CONTACT: Robin C. Ashton, Counsel, Office of Professional Responsibility, Department of Justice, 950 Pennsylvania Avenue, NW., Room 3525, Washington, DC 20530.

In accordance with 5 U.S.C. 552a(r), the Department has provided a report to OMB and Congress on the new system of records.

Dated: October 6, 2011.

Nancy C. Libin,

Chief Privacy and Civil Liberties Officer, Department of Justice.

JUSTICE/OPR–001

SYSTEM NAME:

Office of Professional Responsibility Record Index

SECURITY CLASSIFICATION:

Unclassified Information and Classified Information.

SYSTEM LOCATION:

United States Department of Justice, 950 Pennsylvania Ave., NW., Washington, DC 20530–0001

CATEGORIES OF INDIVIDUALS COVERED BY THE SYSTEM:

(1) DOJ employees who are the subjects of complaints directed to, or inquiries or investigations conducted by, OPR; (2) individuals (complainants) who write to OPR; (3) individuals (complainants) who write to the Attorney General and other officials of the Department and whose correspondence is referred to OPR; (4) employees of agencies of the federal government, other than DOJ, about whom information indicating possible criminal or administrative misconduct has been developed during the course of routine investigation by components of DOJ, when such information is furnished to OPR for referral—if warranted—to an appropriate investigative component of DOJ, or another government agency; (5) non-DOJ attorneys who are the subjects of allegations of professional misconduct which have been referred to OPR by DOJ employees during the course of their official duties; (6) witnesses; and (7) other individuals referenced in cases or matters of concern to OPR.

CATEGORIES OF RECORDS IN THE SYSTEM:

This system of records consists of complaints filed against DOJ employees, the results of investigations into those complaints, and actions taken after completion of the investigations. This system also includes all records developed pursuant to special assignments given to OPR by the Attorney General or the Deputy Attorney General as well as records containing information indicating possible misconduct by employees of the federal government other than DOJ, which have been furnished to OPR for referral, if warranted, to the appropriate investigative authority. This system also includes records concerning non-DOJ attorneys who are the subjects of allegations of professional misconduct which have been referred to OPR by DOJ-employees during the course of their official duties.

AUTHORITY FOR MAINTENANCE OF THE SYSTEM:

44 U.S.C. 3101 *et seq.,* 28 CFR 0.39 *et seq.,* and Attorney General Order No. 833–79.

PURPOSES:

Information in this system is maintained to provide for the resolution of allegations of professional misconduct made against DOJ employees and to advise complainants of the status of investigations and the results. Information in this system is also maintained for purposes of making a determination concerning the possible referral of certain allegations of professional misconduct made against non-DOJ attorneys to the appropriate licensing authorities.

ROUTINE USES OF RECORDS MAINTAINED IN THE SYSTEM, INCLUDING CATEGORIES OF USERS AND THE PURPOSES OF SUCH USES:

Information may be disclosed from this system as follows:

(1) Where a record, either alone or in conjunction with other information, indicates a violation or potential violation of law—criminal, civil, or regulatory in nature—the relevant records may be referred to the appropriate federal, state, local, territorial, tribal, or foreign law enforcement authority, or other appropriate entity charged with the responsibility for investigating or

prosecuting such violation or charged with enforcing or implementing such law.

(2) To any person or entity that OPR has reason to believe possesses information regarding a matter within the jurisdiction of OPR, to the extent deemed to be necessary by OPR, in order to elicit such information or cooperation from the recipient for use in the performance of an authorized activity.

(3) In an appropriate proceeding before a court, grand jury, or administrative or adjudicative body, when the Department of Justice determines that the records are arguably relevant to the proceeding; or in an appropriate proceeding before an administrative or adjudicative body when the adjudicator determines the records to be relevant to the proceeding.

(4) To appropriate officials and employees of a federal agency or entity that requires information relevant to a decision concerning the hiring, appointment, or retention of an employee; the issuance, renewal, suspension, or revocation of a security clearance; the execution of a security or suitability investigation; the letting of a contract; or the issuance of a grant or benefit.

(5) A record may be disclosed to designated officers and employees of state, local, territorial, or tribal law enforcement or detention agencies in connection with the hiring or continued employment of an employee or contractor, where the employee or contractor would occupy or occupies a position of public trust as a law enforcement officer or detention officer having direct contact with the public or with prisoners or detainees, to the extent that the information is relevant and necessary to the recipient agency's decision.

(6) To the news media and the public, including disclosures pursuant to 28 CFR 50.2, unless it is determined that release of the specific information in the context of a particular case would constitute an unwarranted invasion of personal privacy.

(7) To a Member of Congress or staff acting upon the Member's behalf when the Member or staff requests the information on behalf of, and at the request of, the individual who is the subject of the record.

(8) To the National Archives and Records Administration for purposes of records management inspections conducted under the authority of 44 U.S.C. 2904 and 2906.

(9) To complainants to the extent necessary to provide such persons with information and explanations concerning the progress and/or results of the investigation or case arising from the matters of which they complained.

(10) To professional organizations or associations with which individuals covered by this system of records may be affiliated, such as state bar disciplinary authorities, to meet their responsibilities in connection with the administration and maintenance of standards of conduct and discipline.

(11) To contractors, grantees, experts, consultants, students, and others performing or working on a contract, service, grant, cooperative agreement, or other assignment for the federal government, when necessary to accomplish an agency function related to this system of records.

(12) To a former employee of the Department of Justice for purposes of: responding to an official inquiry by a federal, state, or local government entity or professional licensing authority, in accordance with applicable Department regulations; or facilitating communications with a former employee that may be necessary for personnel-related or other official purposes where the Department requires information and/or consultation assistance from the former employee regarding a matter within that person's former area of responsibility.

(13) To a member of the judicial branch of federal government in response to a written request where disclosure is relevant to the authorized function of the recipient judicial office or court system.

(14) To the subject of an investigation or inquiry conducted by OPR to further the investigation or inquiry, or to give notice of the status or outcome of the investigation or inquiry.

(15) To an actual or potential party to litigation or the party's authorized representative for the purpose of negotiation or discussion of such matters as settlement, plea bargaining, or in informal discovery proceedings.

(16) To federal, state, local, territorial, tribal, foreign, or international licensing agencies or associations which require information concerning the suitability or eligibility of an individual for a license or permit.

(17) To such recipients and under such circumstances and procedures as are mandated by federal statute or treaty.

(18) To appropriate agencies, entities, and persons when (1) it is suspected or confirmed that the security or confidentiality of information in the system of records has been compromised; (2) the Department has determined that as a result of the suspected or confirmed compromise there is a risk of harm to economic or property interests, identity theft or fraud, or harm to the security or integrity of this system or other systems or programs (whether maintained by the Department or another agency or entity) that rely upon the compromised information; and (3) the disclosure made to such agencies, entities, and persons is reasonably necessary to assist in connection with the Department's efforts to respond to the suspected or confirmed compromise and prevent, minimize, or remedy such harm.

DISCLOSURE TO CONSUMER REPORTING AGENCIES:

None.

POLICIES AND PRACTICES FOR STORING, RETRIEVING, ACCESSING, RETAINING, AND DISPOSING OF RECORDS IN THE SYSTEMS:

STORAGE:

Information is stored manually in file jackets and electronically in office automation equipment.

RETRIEVABILITY:

Information is retrieved by individual names and by unique file numbers assigned to each case. In most instances, information is retrieved by the name of the employee or non-DOJ attorney who is the subject of the complaint, and in some instances by the name of the complainant. Information may also be retrieved by the name of other individuals referenced in the case or matter.

SAFEGUARDS:

The information is stored in safes, locked filing cabinets, and office automation equipment in a limited access area and is maintained according to applicable departmental security regulations.

RETENTION AND DISPOSAL:

Records in the system are retained and disposed of in accordance with NARA Job #NCI–60–77–6.

SYSTEM MANAGER(S) AND ADDRESS:

Counsel, Office of Professional Responsibility, Department of Justice, 950 Pennsylvania Avenue, NW., Room 3525, Washington, DC 20530.

NOTIFICATION PROCEDURE:

Address any inquiries to the System Manager listed above.

RECORD ACCESS PROCEDURE:

The major part of this system is exempted from this requirement under 5 U.S.C. 552a(j)(2), (k)(1), (k)(2), and/or (k)(5). To the extent that information in this system of records is not subject to exemption, it is subject to access and

contest. A determination as to exemption shall be made at the time a request for access is received. A request for access to records contained in this system shall be made in writing, with the envelope and the letter clearly marked ''Privacy Access Request.'' The request shall include the full name of the individual involved, his or her current address, date and place of birth, notarized signature, together with any other identifying information which may be of assistance in locating the record. The requester will also provide a return address for transmitting the information. Access requests will be directed to the System Manager listed above.

CONTESTING RECORD PROCEDURES:

Individuals desiring to contest or amend information maintained in the system should direct their request to the System Manager listed above, stating clearly and concisely what information is being contested, the reasons for contesting it, and the proposed amendment to the information sought.

RECORD SOURCE CATEGORIES:

Department officers and employees, and other federal, state, local and foreign law enforcement and non-law enforcement agencies, private persons, witnesses, and informants.

SYSTEMS EXEMPTED FROM CERTAIN PROVISIONS OF THE ACT:

The Attorney General has exempted this system from subsections (c)(3) and (4), (d), (e)(1), (2) and (3), (e)(4)(G) and (H), (e)(5) and (8), (f), and (g) of the Privacy Act pursuant to 5 U.S.C. 552a (j)(2), (k)(1), (k)(2), and (k)(5). This exemption applies only to the extent that information in the system is subject to exemption pursuant to 5 U.S.C. 552a (j)(2), (k)(1), (k)(2), or (k)(5). Rules have been promulgated in accordance with the requirements of 5 U.S.C. 553 (b), (c), and (e), and have been published in the **Federal Register**.

[FR Doc. 2011–27758 Filed 10–26–11; 8:45 am]

BILLING CODE 4410–28–P

DEPARTMENT OF JUSTICE

Federal Bureau of Prisons

Notice of Availability of the Record of Decision for Proposed Contract Award to House Federal, Low-Security Criminal Aliens Within a Contractor-Owned and Operated Correctional Facility

AGENCY: U.S. Department of Justice, Federal Bureau of Prisons.

ACTION: Notice of a Record of Decision.

SUMMARY: The U.S. Department of Justice, Federal Bureau of Prisons (BOP) announces the availability of the Record of Decision (ROD) concerning the proposed award of a contract to house approximately 1,750 (+/− 30 percent) Federal, low-security, adult male, non-U.S. citizen, criminal aliens, with 90 months or less remaining to serve on their sentences, within a contractor-owned and operated correctional facility.

Background Information

Pursuant to Section 102(2)(c) of the National Environmental Policy Act of 1969 and the Council of Environmental Quality Regulations (40 CFR parts 1500–1508), the BOP has prepared Draft and Final Environmental Impact Statements (EISs) for the proposed award of a contract to house Federal, non-U.S. citizen, criminal aliens within a contractor-owned and operated correctional facility.

Project Information

The Federal Bureau of Prisons (BOP) faces continued growth in its inmate population resulting from on-going Federal law enforcement programs. Over the period encompassing Fiscal Year (FY) 2010 through FY 2015, the BOP anticipates the total Federal inmate population to increase from approximately 210,227 to 239,344. Of the approximately 29,000 inmates to be added to the Federal prison system during this time, the BOP is projecting approximately 8,000 to be low-security inmates. In housing these and other inmates, the BOP relies upon community-correction, detention and correctional facilities that are either federally-owned and operated (*i.e.,* BOP facilities); federally-owned and non-federally operated; or non-federally owned and operated (*i.e.,* contractor facilities).

Presently, the BOP is responsible for housing approximately 27,000 low-security criminal aliens and due to limitations on bedspace within BOP-operated Federal Correctional Institutions (FCI), approximately 25,000 such inmates are housed in contractor-owned and operated facilities. The projected number of sentenced criminal aliens and continued limitations on capacity within the BOP's low-security FCIs will ensure further reliance upon contractor-owned and operated correctional facilities to house a large portion of this inmate population. The BOP contracts with such operators to house and service a portion of the criminal alien population. Periodically, such contracts expire, and as long as needs persist, they are re-competed in accordance with BOP procedures and Federal Acquisition Regulations. One such contract, scheduled to expire in 2012, involves approximately 1,750 low-security criminal aliens currently housed at the McRae Correctional Center located in McRae, Georgia.

In order to ensure that the criminal alien population currently incarcerated at the McRae Correctional Center continues to be properly housed and supervised in a contractor-owned and operated facility, the BOP undertook a nationwide procurement. Under the Criminal Alien Requirement 12 procurement (RFP–PCC–0017), the BOP solicited proposals to house approximately 1,750 (+/− 30 percent) Federal, low-security, adult male, non-U.S. citizen, criminal aliens, with 90 months or less remaining to serve on their sentences, within a contractor-owned and operated correctional facility. The BOP's procurement solicitation stated that the requirement would be fulfilled through a single award.

The BOP requires flexibility in managing the shortage of beds at the low-security level as well as the anticipated future increases at this security level. Such management flexibility, involving the use of privately-owned and operated facilities, would help to meet population capacity needs in a timely fashion, conform to Federal law, and maintain fiscal responsibility while successfully meeting the mission of the BOP. That mission is to protect society by confining offenders in the controlled environments of prison and community-based facilities that are safe, humane, cost-efficient, and appropriately secure, and that provide work and other self-improvement opportunities to assist offenders in becoming law-abiding citizens.

The BOP issued a Draft EIS in June 2011 with publication of the Notice of Availability (NOA) in the **Federal Register** on June 24, 2011. The NOA provided a start date for the 45-day public comment period beginning on June 24, 2011, and ending on August 8, 2011. During the public comment period, public hearings concerning the proposed action and the Draft EIS were held on July 7, 2011 in Scott County, Mississippi; July 13, 2011 in McRae, Georgia; and August 4, 2011 in Hinton, Oklahoma.

The Final EIS addressed comments received on the Draft EIS and publication of the NOA in the **Federal Register** concerning the Final EIS occurred on September 9, 2011. The

public comments concerning the Final EIS ended on October 11, 2011, during which time comment letters and similar forms of communication were received by the BOP. Comments received by the BOP concerning the Final EIS were similar to those comments received by the BOP concerning the Draft EIS and all such comments were considered in the decision presented in the ROD.

BOP provided written notices of the availability of the Draft EIS and Final EIS in the **Federal Register**, three newspapers with local and regional circulations, and through three local public libraries. The BOP also distributed approximately 170 copies (each) of the Draft EIS and Final EIS to Federal agencies, state and local governments, elected officials, interested organizations and individuals.

The BOP evaluated alternatives as part of the EIS including the No Action Alternative; implementation of the proposed action in Hinton, Oklahoma involving use of the Great Plains Correctional Facility; in McRae, Georgia involving use of the existing or an expanded McRae Correctional Center; and implementation of the proposed action in Scott County, Mississippi involving development of a new contractor-owned and operated correctional facility to house the Federal inmate population. Each of the alternatives in Hinton, Oklahoma; McRae, Georgia; and Scott County, Mississippi were examined in detail in the Draft and Final EISs with contract award to the McRae Correctional Center in McRae, Georgia considered to be the Preferred Alternative.

Availability of Record of Decision

The Record of Decision and other information regarding this undertaking are available upon request. To request a copy of the Record of Decision, please contact: Richard A. Cohn, Chief, or Issac J. Gaston, Site Selection Specialist, Capacity Planning and Site Selection Branch, Federal Bureau of Prisons, 320 First Street, NW., Washington, DC 20534; Tel: 202–514–6470/Fax: 202–616–6024/E-mail: *racohn@bop.gov*.

FOR FURTHER INFORMATION CONTACT: Richard A. Cohn, Federal Bureau of Prisons.

Dated: October 19, 2011.

Richard A. Cohn,

Chief, Capacity Planning and Site Selection Branch.

[FR Doc. 2011–27728 Filed 10–26–11; 8:45 am]

BILLING CODE P

DEPARTMENT OF LABOR

Office of the Secretary

Agency Information Collection Activities; Submission for OMB Review; Comment Request; Payment of Compensation Without Award

ACTION: Notice.

SUMMARY: The Department of Labor (DOL) is submitting the Office of Workers' Compensation Programs (OWCP) sponsored information collection request (ICR) titled, ''Payment of Compensation Without Award,'' Form LS–206, as revised to the Office of Management and Budget (OMB) for review and approval for use in accordance with the Paperwork Reduction Act (PRA) of 1995 (44 U.S.C. 3501 *et seq.*).

DATES: Submit comments on or before November 28, 2011.

ADDRESSES: A copy of this ICR with applicable supporting documentation; including a description of the likely respondents, proposed frequency of response, and estimated total burden may be obtained from the RegInfo.gov Web site, *http://www.reginfo.gov/public/do/PRAMain,* on the day following publication of this notice or by contacting Michel Smyth by telephone at (202) 693–4129 (this is not a toll-free number) or sending an email to *DOL_PRA_PUBLIC@dol.gov.*

Submit comments about this request to the Office of Information and Regulatory Affairs, *Attn:* OMB Desk Officer for the Department of Labor, Office of Workers' Compensation Programs (OWCP), Office of Management and Budget, Room 10235, Washington, DC 20503, *Telephone:* (202) 395–6929/*Fax:* (202) 395–6881 (these are not toll-free numbers), *email: OIRA_submission@omb.eop.gov.*

FOR FURTHER INFORMATION CONTACT: Michel Smyth by telephone at (202) 693–4129 (this is not a toll-free number) or by email at *DOL_PRA_PUBLIC@dol.gov.*

SUPPLEMENTARY INFORMATION: Insurance carriers and self-insurers use Form LS–206 to report the initial payment of compensation benefits to injured claimants as required by the Longshore and Harbor Workers' Compensation Act to the OWCP. The OWCP is revising this information collection to make the form fillable and printable from the Internet for non-electronic submission to the agency and to make cosmetic changes to the form. The changes are not expected to alter the public burden.

This information collection is subject to the PRA. A Federal agency generally cannot conduct or sponsor a collection of information, and the public is generally not required to respond to an information collection, unless it is approved by the OMB under the PRA and displays a currently valid OMB Control Number. In addition, notwithstanding any other provisions of law, no person shall generally be subject to penalty for failing to comply with a collection of information if the collection of information does not display a valid OMB Control Number. *See* 5 CFR 1320.5(a) and 1320.6. The DOL obtains OMB approval for this information collection under OMB Control Number 1240–0043. The current OMB approval is scheduled to expire on October 31, 2011; however, it should be noted that existing information collection requirements submitted to the OMB receive a month-to-month extension while they undergo review. For additional information, see the related notice published in the **Federal Register** on July 7, 2011 (76 FR 39904).

Interested parties are encouraged to send comments to the OMB, Office of Information and Regulatory Affairs at the address shown in the **ADDRESSES** section within 30 days of publication of this notice in the **Federal Register**. In order to help ensure appropriate consideration, comments should reference OMB Control Number 1240–0043. The OMB is particularly interested in comments that:

- Evaluate whether the proposed collection of information is necessary for the proper performance of the functions of the agency, including whether the information will have practical utility;
- Evaluate the accuracy of the agency's estimate of the burden of the proposed collection of information, including the validity of the methodology and assumptions used;
- Enhance the quality, utility, and clarity of the information to be collected; and
- Minimize the burden of the collection of information on those who are to respond, including through the use of appropriate automated, electronic, mechanical, or other technological collection techniques or other forms of information technology, e.g., permitting electronic submission of responses.

Agency: Office of Workers' Compensation Programs (OWCP).

Title of Collection: Payment of Compensation Without Award.

OMB Control Number: 1240–0043.

Affected Public: Private Sector—Businesses or other for profits.

Total Estimated Number of Respondents: 600.

Total Estimated Number of Responses: 16,800.

Total Estimated Annual Burden Hours: 4,200.

Total Estimated Annual Other Costs Burden: $8,652.

Dated: October 20, 2011.

Michel Smyth,

Departmental Clearance Officer.

[FR Doc. 2011–27820 Filed 10–26–11; 8:45 am]

BILLING CODE 4510–CF–P

DEPARTMENT OF LABOR

Office of the Secretary

Agency Information Collection Activities; Submission for OMB Review; Comment Request; Construction Recordkeeping and Reporting

ACTION: Notice.

SUMMARY: The Department of Labor (DOL) is submitting the Office of Federal Contract Compliance Programs (OFCCP) sponsored information collection request (ICR) titled, ''Construction Recordkeeping and Reporting,'' to the Office of Management and Budget (OMB) for review and approval for continued use in accordance with the Paperwork Reduction Act (PRA) of 1995 (44 U.S.C. 3501 *et seq.*).

DATES: Submit comments on or before November 28, 2011.

ADDRESSES: A copy of this ICR with applicable supporting documentation; including a description of the likely respondents, proposed frequency of response, and estimated total burden may be obtained from the RegInfo.gov Web site, *http://www.reginfo.gov/public/do/PRAMain,* on the day following publication of this notice or by contacting Michel Smyth by telephone at (202) 693–4129 (this is not a toll-free number) or sending an email to *DOL_PRA_PUBLIC@dol.gov*.

Submit comments about this request to the Office of Information and Regulatory Affairs, *Attn:* OMB Desk Officer for the Department of Labor, Office of Federal Contract Compliance Programs (OFCCP), Office of Management and Budget, Room 10235, Washington, DC 20503, *Telephone:* (202) 395–6929/*Fax:* (202) 395–6881 (these are not toll-free numbers), *email: OIRA_submission@omb.eop.gov.*

FOR FURTHER INFORMATION CONTACT: Contact Michel Smyth by telephone at (202) 693–4129 (this is not a toll-free number) or by email at *DOL_PRA_PUBLIC@dol.gov.*

SUPPLEMENTARY INFORMATION: The OFCCP administers three nondiscrimination and equal employment opportunity laws: Executive Order 11246, as amended (EO 11246); section 503 of the Rehabilitation Act of 1973, as amended, 29 U.S.C. 793 (referred to as section 503); and the Vietnam Era Veterans' Readjustment Assistance Act of 1974, as amended, 38 U.S.C. 4212 (referred to as Section 4212 or VEVRAA). These authorities prohibit employment discrimination but also require affirmative action to ensure that equal employment opportunities are available regardless of race, sex, color, national origin, religion, or status as an individual with a disability or protected veteran by Federal contractors. The ICR addresses recordkeeping and reporting for compliance with EO 11246, section 503, and section 4212 for the construction aspects of the OFCCP program. Recordkeeping and reporting by Federal and Federally assisted construction contractors and subcontractors is necessary to substantiate their compliance with nondiscrimination and affirmative action contractual obligations.

This information collection is subject to the PRA. A Federal agency generally cannot conduct or sponsor a collection of information, and the public is generally not required to respond to an information collection, unless it is approved by the OMB under the PRA and displays a currently valid OMB Control Number. In addition, notwithstanding any other provisions of law, no person shall generally be subject to penalty for failing to comply with a collection of information if the collection of information does not display a valid OMB Control Number. *See* 5 CFR 1320.5(a) and 1320.6. The DOL obtains OMB approval for this information collection under OMB Control Number 1250–0001. The current OMB approval is scheduled to expire on October 31, 2011; however, it should be noted that existing information collection requirements submitted to the OMB receive a month-to-month extension while they undergo review. For additional information, see the related notice published in the **Federal Register** on June 8, 2011 (76 FR 33372).

Interested parties are encouraged to send comments to the OMB, Office of Information and Regulatory Affairs at the address shown in the **ADDRESSES** section within 30 days of publication of this notice in the **Federal Register**. In order to help ensure appropriate consideration, comments should reference OMB Control Number 1250–0001. The OMB is particularly interested in comments that:

- Evaluate whether the proposed collection of information is necessary for the proper performance of the functions of the agency, including whether the information will have practical utility;
- Evaluate the accuracy of the agency's estimate of the burden of the proposed collection of information, including the validity of the methodology and assumptions used;
- Enhance the quality, utility, and clarity of the information to be collected; and
- Minimize the burden of the collection of information on those who are to respond, including through the use of appropriate automated, electronic, mechanical, or other technological collection techniques or other forms of information technology, e.g., permitting electronic submission of responses.

Agency: Office of Federal Contract Compliance Programs (OFCCP).

Title of Collection: Construction Recordkeeping and Reporting.

OMB Control Number: 1250–0001.

Affected Public: Private sector—businesses or other for-profits and not-for-profit institutions.

Total Estimated Number of Respondents: 75,696.

Total Estimated Number of Responses: 75,696.

Total Estimated Annual Burden Hours: 1,326,320.

Total Estimated Annual Other Costs Burden: $0.

Dated: October 21, 2011.

Michel Smyth,

Departmental Clearance Officer.

[FR Doc. 2011–27840 Filed 10–26–11; 8:45 am]

BILLING CODE 4510–45–P

DEPARTMENT OF LABOR

Employment and Training Administration

Notice of Determinations Regarding Eligibility To Apply for Worker Adjustment Assistance and Alternative Trade Adjustment Assistance

In accordance with Section 223 of the Trade Act of 1974, as amended (19 U.S.C. 2273) the Department of Labor herein presents summaries of determinations regarding eligibility to apply for trade adjustment assistance for workers (TA–W) number and alternative trade adjustment assistance (ATAA) by (TA–W) number issued during the period of October 11, 2011 through October 14, 2011.

In order for an affirmative determination to be made for workers of

a primary firm and a certification issued regarding eligibility to apply for worker adjustment assistance, each of the group eligibility requirements of Section 222(a) of the Act must be met.

I. Section (a)(2)(A) all of the following must be satisfied:

A. a significant number or proportion of the workers in such workers' firm, or an appropriate subdivision of the firm, have become totally or partially separated, or are threatened to become totally or partially separated;

B. the sales or production, or both, of such firm or subdivision have decreased absolutely; and

C. increased imports of articles like or directly competitive with articles produced by such firm or subdivision have contributed importantly to such workers' separation or threat of separation and to the decline in sales or production of such firm or subdivision; or

II. Section (a)(2)(B) both of the following must be satisfied:

A. a significant number or proportion of the workers in such workers' firm, or an appropriate subdivision of the firm, have become totally or partially separated, or are threatened to become totally or partially separated;

B. there has been a shift in production by such workers' firm or subdivision to a foreign country of articles like or directly competitive with articles which are produced by such firm or subdivision; and

C. One of the following must be satisfied:

1. the country to which the workers' firm has shifted production of the articles is a party to a free trade agreement with the United States;

2. the country to which the workers' firm has shifted production of the articles to a beneficiary country under the Andean Trade Preference Act, African Growth and Opportunity Act, or the Caribbean Basin Economic Recovery Act; or

3. there has been or is likely to be an increase in imports of articles that are like or directly competitive with articles which are or were produced by such firm or subdivision.

Also, in order for an affirmative determination to be made for secondarily affected workers of a firm and a certification issued regarding eligibility to apply for worker adjustment assistance, each of the group eligibility requirements of Section 222(b) of the Act must be met.

(1) significant number or proportion of the workers in the workers' firm or an appropriate subdivision of the firm have become totally or partially separated, or are threatened to become totally or partially separated;

(2) the workers' firm (or subdivision) is a supplier or downstream producer to a firm (or subdivision) that employed a group of workers who received a certification of eligibility to apply for trade adjustment assistance benefits and such supply or production is related to the article that was the basis for such certification; and

(3) either—

(A) the workers' firm is a supplier and the component parts it supplied for the firm (or subdivision) described in paragraph (2) accounted for at least 20 percent of the production or sales of the workers' firm; or

(B) a loss or business by the workers' firm with the firm (or subdivision) described in paragraph (2) contributed importantly to the workers' separation or threat of separation.

In order for the Division of Trade Adjustment Assistance to issue a certification of eligibility to apply for Alternative Trade Adjustment Assistance (ATAA) for older workers, the group eligibility requirements of Section 246(a)(3)(A)(ii) of the Trade Act must be met.

1. Whether a significant number of workers in the workers' firm are 50 years of age or older.

2. Whether the workers in the workers' firm possess skills that are not easily transferable.

3. The competitive conditions within the workers' industry (i.e., conditions within the industry are adverse).

Affirmative Determinations for Worker Adjustment Assistance and Alternative Trade Adjustment Assistance

The following certifications have been issued. The date following the company name and location of each determination references the impact date for all workers of such determination.

The following certifications have been issued. The requirements of Section 222(a)(2)(A) (increased imports) and Section 246(a)(3)(A)(ii) of the Trade Act have been met.

TA–W–80,142; Ditan Distribution, LLC, Forest Park, GA: April 27, 2010

TA–W–80,142A; Ditan Distribution, LLC, Plainfield, IN: April 27, 2010

TA–W–80,307; CommScope, Inc., Catawba, NC: July 20, 2010

TA–W–80,307A; CommScope, Inc., Conover, NC: July 20, 2010

TA–W–80,380; Pulse Electronics, San Diego, CA: August 18, 2010

TA–W–80,444; Spang and Company, East Butler, PA: August 13, 2011

TA–W–80,444A; Spang and Company, Pittsburgh, PA: August 13, 2011

TA–W–80,445; Masco, Waverly, OH: October 17, 2011

The following certifications have been issued. The requirements of Section 222(a)(2)(B) (shift in production) and Section 246(a)(3)(A)(ii) of the Trade Act have been met.

TA–W–80,331; Sloan Transportation Products, Holland, MI: July 22, 2010

TA–W–80,450; Cadent, Inc., Carlstadt, NJ: September 19, 2010

The following certifications have been issued. The requirements of Section 222(b) (supplier to a firm whose workers are certified eligible to apply for TAA) and Section 246(a)(3)(A)(ii) of the Trade Act have been met.

TA–W–80,388; Phoenix Trim Works, Inc., Williamsport, PA: August 20, 2011

TA–W–80,422; Coastal Lumber Company, Buckhannon, WV: September 7, 2010

TA–W–80,422A; Coastal Lumber Company, Elgon, WV: September 7, 2010

TA–W–80,422B; Coastal Lumber Company, Elkins, WV: September 7, 2010

TA–W–80,422C; Coastal Lumber Company, Smithburg, WV: September 7, 2010

TA–W–80,422D; Coastal Lumber Company, Frametown, WV: September 7, 2010

TA–W–80,422E; Coastal Lumber Company, Hacker Valley, WV: September 7, 2010

TA–W–80,422F; Coastal Lumber Company, Gassaway, WV: September 7, 2010

TA–W–80,422G; Coastal Lumber Company, Dailey, WV: September 7, 2010

TA–W–80,422H; Coastal Lumber Company, Dailey, WV: September 7, 2010

TA–W–80,422I; Coastal Lumber Company, Charlottesville, WV: September 7, 2010

TA–W–80,422J; Coastal Lumber Company, Hopwood, PA: September 7, 2010

Determinations Terminating Investigations of Petitions for Worker Adjustment Assistance

After notice of the petitions was published in the **Federal Register** and on the Department's Web site, as required by Section 221 of the Act (19 U.S.C. 2271), the Department initiated investigations of these petitions.

The following determinations terminating investigations were issued because the petitioning groups of workers are covered by active certifications. Consequently, further

investigation in these cases would serve no purpose since the petitioning group of workers cannot be covered by more than one certification at a time.

TA–W–80,427; Coastal Lumber Company, Hopwood, PA

I hereby certify that the aforementioned determinations were issued during the period of October 11, 2011 through October 14, 2011. Copies of these determinations may be requested under the Freedom of Information Act. Requests may be submitted by fax, courier services, or mail to FOIA Disclosure Officer, Office of Trade Adjustment Assistance (ETA), U.S. Department of Labor, 200 Constitution Avenue, NW., Washington, DC 20210 or *tofoiarequest@dol.gov*. These determinations also are available on the Department's Web site at *http://www.doleta.gov/tradeact* under the searchable listing of determinations.

Dated: October 20, 2011.

Michael W. Jaffe,

Certifying Officer, Office of Trade Adjustment Assistance.

[FR Doc. 2011–27847 Filed 10–26–11; 8:45 am]

BILLING CODE 4510–FN–P

DEPARTMENT OF LABOR

Employment and Training Administration

Investigations Regarding Certifications of Eligibility To Apply for Worker Adjustment Assistance and Alternative Trade Adjustment Assistance

Petitions have been filed with the Secretary of Labor under Section 221(a) of the Trade Act of 1974 (''the Act'') and are identified in the Appendix to this notice. Upon receipt of these petitions, the Director of the Division of Trade Adjustment Assistance, Employment and Training Administration, has instituted investigations pursuant to Section 221(a) of the Act.

The purpose of each of the investigations is to determine whether the workers are eligible to apply for adjustment assistance under title II, chapter 2, of the Act. The investigations will further relate, as appropriate, to the determination of the date on which total or partial separations began or threatened to begin and the subdivision of the firm involved.

The petitioners or any other persons showing a substantial interest in the subject matter of the investigations may request a public hearing, provided such request is filed in writing with the Director, Office of Trade Adjustment Assistance, at the address shown below, not later than November 7, 2011.

Interested persons are invited to submit written comments regarding the subject matter of the investigations to the Director, Office of Trade Adjustment Assistance, at the address shown below, not later than November 7, 2011.

The petitions filed in this case are available for inspection at the Office of the Director, Office of Trade Adjustment Assistance, Employment and Training Administration, U.S. Department of Labor, Room N–5428, 200 Constitution Avenue NW., Washington, DC 20210.

Signed at Washington, DC, this 20th day of October 2011.

Michael Jaffe,

Certifying Officer, Office of Trade Adjustment Assistance.

APPENDIX

[20 TAA petitions instituted between 10/10/11 and 10/14/11]

TA–W	Subject firm (petitioners)	Location	Date of institution	Date of petition
80500	IBM (State/One-Stop)	San Francisco, CA	10/11/11	10/07/11
80501	TT Electronics (Company)	Boone, NC	10/11/11	10/10/11
80502	LexisNexis (Company)	Miamisburg, OH	10/11/11	10/06/11
80503	Viam Manufacturing, Inc. (Company)	Santa Fe Springs, CA	10/11/11	10/06/11
80504	BASF Corporation (Company)	Belvidere, NJ	10/14/11	10/11/11
80505	Haldex (State/One-Stop)	Kansas City, MO	10/14/11	10/12/11
80506	JVC–USA Product Return Center (State/One-Stop)	McAllen, TX	10/14/11	10/12/11
80507	Kerry Ingredients & Flavours (Union)	Turtle Lake, WI	10/14/11	10/12/11
80508	Stateline Warehouse (Workers)	Ridgeway, VA	10/14/11	10/07/11
80509	ON Semiconductor (Company)	Phoenix, AZ	10/14/11	10/06/11
80510	Suntron Corporation (Company)	Sugar Land, TX	10/14/11	10/12/11
80511	Specialty Bar Products Co. (Workers)	Blairsville, PA	10/14/11	10/05/11
80512	Pilgrim's Pride—Dallas Processing Plant (State/One-Stop)	Dallas, TX	10/14/11	09/30/11
80513	Centurion Medical Products (Workers)	Jeanette, PA	10/14/11	10/13/11
80514	Intier Magna (State/One-Stop)	Shreveport, LA	10/14/11	10/13/11
80515	AI Android Industries (State/One-Stop)	Shreveport, LA	10/14/11	10/13/11
80516	Travelers (Workers)	Elmira, NY	10/14/11	10/13/11
80517	AGS Automotive (State/One-Stop)	Shreveport, LA	10/14/11	10/13/11
80518	KV Pharmaceuticals (State/One-Stop)	Bridgeton, MO	10/14/11	10/13/11
80519	Verso Paper Corp. (Union)	Bucksport, ME	10/14/11	10/13/11

[FR Doc. 2011–27846 Filed 10–26–11; 8:45 am]

BILLING CODE 4510–FN–P

LIBRARY OF CONGRESS

Copyright Office

[Docket No. 2011–10]

Remedies for Small Copyright Claims

AGENCY: Copyright Office, Library of Congress.

ACTION: Notice of inquiry.

SUMMARY: The U.S. Copyright Office is undertaking a study at the request of Congress to assess whether and, if so, how the current legal system hinders or prevents copyright owners from pursuing copyright infringement claims that have a relatively small economic value (''small copyright claims''); and recommend potential changes in administrative, regulatory, and statutory authority to improve the adjudication of these small copyright claims. The Office

thus seeks comment on how copyright owners have handled small copyright claims and the obstacles they have encountered, as well as potential alternatives to the current legal system that could better accommodate such claims. This is a general inquiry and the Office will publish additional notices on this topic.

DATES: Comments are due January 16, 2012.

ADDRESSES: All comments and reply comments shall be submitted electronically. A comment page containing a comment form is posted on the Office Web site at *http://www.copyright.gov/docs/smallclaims.* The Web site interface requires submitters to complete a form specifying name and organization, as applicable, and to upload comments as an attachment via a browser button. To meet accessibility standards, submitters must upload comments in a single file not to exceed six megabytes (MB) in one of the following formats: the Adobe Portable Document File (PDF) format that contains searchable, accessible text (not an image); Microsoft Word; WordPerfect; Rich Text Format (RTF); or ASCII text file format (not a scanned document). The form and face of the comments must include both the name of the submitter and organization. The Office will post all comments publicly on the Office's Web site exactly as they are received, along with names and organizations. If electronic submission of comments is not feasible, please contact the Office at 202–707–8380 for special instructions.

FOR FURTHER INFORMATION CONTACT: Catherine Rowland, Counsel, Office of Policy and International Affairs, by telephone at 202–707–8350 or by electronic mail at *crowland@loc.gov.*

SUPPLEMENTARY INFORMATION:

I. Background

The Copyright Act (the ''Act''), 17 U.S.C. 101 *et seq.,* protects a wide variety of works of authorship, ranging from individual articles or photographs that may not have a high commercial value to motion pictures worth hundreds of millions of dollars in the marketplace. Copyright owners of all of these works may seek remedies under the federal Copyright Act in the event of infringement. Not all of these copyright owners, however, have the same resources to bring a federal lawsuit, which can require substantial time, money, and effort. To the extent an infringement results in a relatively small amount of economic damage, the copyright owner may be dissuaded from filing a lawsuit because the potential award may not justify the expense of litigation. Even where statutory damages and attorney fees are possible, they are not available until the conclusion of the litigation. Moreover, awards of statutory damages may be as low as $750 (or, in cases of innocent infringement, $200), and may not always make the copyright owner whole.

In light of these challenges, the House of Representatives' Subcommittee on Courts, the Internet, and Intellectual Property held a hearing in March 2006 to learn more about the problems faced by small copyright claimants (the ''Small Claims Hearing'').[1] The hearing focused on possible alternative dispute resolution systems such as a copyright ''small claims court'' or other mechanism. The testimony also addressed some of the problems that small copyright claim owners have with the current system, as well as concerns about defendants' rights in an alternative system. The Copyright Office submitted a statement to the Subcommittee regarding the small copyright claims issue, noting these difficulties, proposing to review potential alternatives, and welcoming the possibility of further study.[2] The Copyright Office also identified some of these ''small claims'' challenges in its 2006 Report on Orphan Works,[3] and proposed legislation in 2006 and 2008 addressing orphan works included provisions that specifically directed the Copyright Office to conduct a study addressing remedies for small claims, but the legislation ultimately did not become law.[4]

The Chairman of the House Judiciary Committee has recently asked the U.S. Copyright Office to study the obstacles facing small copyright claims disputes, as well as possible alternatives. In a letter dated October 11, 2011, Chairman Lamar Smith requested that the Office ''undertake a study to assess: (1) The extent to which authors and other copyright owners are effectively prevented from seeking relief from infringements due to constraints in the current system; and (2) furnish specific recommendations, as appropriate, for changes in administrative, regulatory and statutory authority that will improve the adjudication of small copyright claims and thereby enable all copyright owners to more fully realize the promise of exclusive rights enshrined in our Constitution.''

The Office therefore seeks comments on how parties—both copyright owners and those alleged to have infringed—view the current system, what their experiences with the current system have been, and what types of alternatives would be helpful and viable.

A. Challenges of the Current Legal System

Currently, copyright owners interested in bringing a lawsuit to enforce their copyrights must do so in federal district courts, which have exclusive jurisdiction over copyright claims. 28 U.S.C. 1338. This is true regardless of the monetary value of the copyright claim. Vesting exclusive jurisdiction in federal courts is generally beneficial because copyright law is federal law, and federal courts have become familiar with copyright analysis and thus should bring a level of consistency to copyright cases. Additionally, the Act aids some copyright claimants by permitting awards of reasonable attorney's fees and statutory damages to the prevailing party, but a plaintiff may recover statutory damages and attorney's fees only if the work was timely registered. 17 U.S.C. 412, 504, 505.

Despite the benefits of the current system, there are some drawbacks to requiring copyright owners and defendants to engage in potentially extensive federal litigation for all copyright disputes. One of the major impediments to federal lawsuits is the cost of litigation. Although copyright owners could proceed *pro se* in federal court, they often need the assistance of a lawyer to understand and handle federal procedures and substantive law. This is especially true because, unlike in the state court system, there is no streamlined ''small claims'' process for claims with a lower monetary value. If a copyright owner hires a lawyer, the expenses can add up quickly. Contingency fee arrangements are relatively rare in copyright lawsuits; thus most copyright owners will have to pay an hourly fee for representation. Lawyers charge hundreds of dollars per hour, which could reach a total of tens

[1] *Remedies for Small Copyright Claims, Before the Subcomm. on Courts, the Internet, and Intellectual Property of the H. Comm. on the Judiciary,* 109th Cong. (2006), available at *http://frwebgate.access.gpo.gov/cgi-bin/getdoc.cgi?dbname=109_house_hearings&docid=f:26767.pdf.*

[2] *Remedies for Small Copyright Claims, Before the Subcomm. on Courts, the Internet, and Intellectual Property of the H. Comm. on the Judiciary,* 109th Cong. (2006) (statement of the United States Copyright Office), available at *http://www.copyright.gov/docs/regstat032906.html.*

[3] United States Copyright Office, *Report on Orphan Works* 1 (2006), available at *http://www.copyright.gov/orphan/orphan-report-full.pdf.*

[4] Proposed bills include the Shawn Bentley Orphan Works Act of 2008, S. 2913, 110th Cong. (2008), which was passed by the Senate; the Orphan Works Act of 2008, H.R. 5889, 110th Cong. (2008); and the Orphan Works Act of 2006, H.R. 5439, 109th Cong. (2006).

or hundreds of thousands of dollars when a case does not immediately settle and instead requires discovery, motion practice, and trial. In fact, one recent survey found that, as of 2011, the median cost for litigating a copyright infringement lawsuit with less than $1 million at risk was $350,000. Am. Intellectual Prop. Law Ass'n (''AIPLA''), Report of the Economic Survey 2011 35 (2011). Even if a copyright owner proceeds *pro se,* litigation itself includes court costs and fees, which can add up to a not insignificant sum. Many individual copyright owners simply do not have the resources to fund expensive litigation. Moreover, even though the Act allows some awards of attorney's fees, other costs, and statutory damages, these awards are not guaranteed—and may not be available at all depending on the timeliness of copyright registration—and are only awarded at the end of litigation, likely after a copyright owner has made significant out of pocket payment to cover legal fees and court costs. Additionally, an award of attorney's fees—assuming that it is collectible—will not necessarily reimburse the copyright owner for all fees expended in prosecuting a claim.

In federal litigation, the period of time between the filing of a case and the final determination can be lengthy. The Federal Rules of Civil Procedure allow parties to engage in extensive discovery and motion practice, which often take far more than a year to complete. In fact, the median time for all cases that went to trial—not just copyright suits—was twenty-three months in 2009–2010.[5] This lengthy time frame requires litigants to expend energy and effort throughout a relatively long period of time. This investment of time, not to mention the associated expenses, may not be feasible for individual authors, who may not be able to dedicate sufficient time to handle all of the litigation burdens.

B. Potential Alternatives for Small Copyright Claims

The Office is interested in learning about alternatives to the current legal system that might help alleviate some of the burdens associated with pursuing small copyright claims. Some alternatives were identified at the Small Claims Hearing, including: (1) Using the current Copyright Royalty Board (a panel of administrative law judges established under Chapter 8 of Title 17 that sets rates and terms for statutory licenses and decides how to distribute certain statutory license royalties); (2) creating a federal ''small claims court'' or otherwise streamlining federal procedures; (3) developing a staff of dedicated administrative law judges to specialize in small copyright claims; (4) amending the Act to allow state courts (including small claims courts) to hear small copyright claims; and (5) allowing trade associations or other group representatives to bring a single, large filing on behalf of a sizeable group of small copyright owners. While these alternatives deserve balanced discussion, there may be other potentially suitable options that were not discussed at the Small Claims Hearing.

There are, of course, a variety of issues that require further consideration. These include:

Degree of Difficulty Litigating Small Copyright Claims in the Current System: Before analyzing various alternatives to the current system, it is important to further explore the obstacles that the district court process presents in small copyright claim cases. This would help focus future analysis and any potential alternative legal processes.

State Court Involvement: State courts do not have expertise in copyright jurisprudence. As noted above, Section 1338 of Title 28 of the U.S. Code vests federal courts with exclusive jurisdiction over copyright claims. Moreover, Section 301 of the Act explicitly preempts state claims ''that are equivalent to any of the exclusive rights within the general scope of copyright as specified by section 106 in works of authorship that are fixed in a tangible medium of expression and come within the subject matter of copyright as specified by sections 102 and 103.'' Thus, state courts are not experienced in the nuances of copyright law and may not have sufficient resources to devote to a claim's intricacies, especially when limited in a small claims court context. Nevertheless, state courts commonly handle small disputes, and thus they likely have the structure to handle the logistics of such claims. State court involvement, however, is only one possible avenue to explore and there are also several federal options that should be considered in the discussion.

Location of Federal Court/Tribunal: Creating a federal ''small claims court'' or administrative judge panel would create logistical rather than jurisdictional challenges, including where the court(s) and panel(s) would be located. If there are several courts or panels located throughout the country, it may provide more convenience to the parties, but it may also reduce consistency and add to administrative costs. Alternatively, if there is only one court or panel, the guiding rules could allow for liberal use of telephone conferences and videoconferences, and the procedures could focus more on a paper practice with fewer (if any) hearings. The court or tribunal could also limit the types and amount of discovery in the interest of expediency.

Affiliation With the Copyright Office or Copyright Royalty Board: The Copyright Office administers the Copyright Act, is a substantive expert on provisions of copyright law, and has statutory responsibilities in both litigation and administrative law. It may thus be appropriate for the Office to be associated with a new process. Similarly, the Copyright Royalty Board is already proficient in handling administrative procedures under the Act, and it may have the capability of expanding its scope to handle additional claims.

Determination of ''Small'' Copyright Claims: Although many copyright owners are concerned about the cost of litigating ''small'' copyright claims in federal court, the definition of ''small'' is unclear. Any changes in legal process must take a balanced approach to determine which claims are deemed ''small'' enough to fit into the new system.

Voluntary or Mandatory: A major question is whether a new small copyright claim process would be voluntary or mandatory. Copyright owners may want the option of choosing which type of court hears a claim, and defendants might similarly wish to remove a claim filed in a new court or panel to federal district court. Additionally, the question arises about how to appeal an adverse decision—and to what court or other body.

Fair Use: The affirmative defense of fair use defense is extremely fact-specific and typically requires courts to examine decades of judicial precedent. The ability to present and have heard a fair use defense is therefore a concern.

Defendants' Appearance: It has been suggested that defendants should not be required to appear at a small copyright claim proceeding until the copyright owner provides a *prima facie* case of infringement. This ostensibly would prevent a copyright owner from dragging a defendant into a legal proceeding without cause. It is unclear

[5] Federal Judicial Caseload Statistics, March 31, 2010, Office of Judges Programs, Statistics Division, Administrative Office of the United States Courts, Table C–5, *available at http://www.uscourts.gov/Viewer.aspx?doc=/uscourts/Statistics/FederalJudicialCaseloadStatistics/2010/tables/C05Mar10.pdf.* The time frame differs significantly between districts—from 11.1 months in the U.S. District Court for the Eastern District of Virginia to 41.2 months in the U.S. District Court for the District of Columbia.

whether this would be necessary, or whether an alternative small copyright claims proceeding might instead rely upon a rule akin to Federal Rule of Civil Procedure 11, which requires plaintiffs to certify the veracity of the claim.

Available Remedies: Because a small copyright claim process likely would be limited to reduce costs and time, it is unclear what types of remedies should be offered. The Act itself offers a number of infringement remedies, including injunctions, monetary relief (including statutory damages), impounding of infringing copies and of the articles by means of which infringing copies may be reproduced, costs and attorney's fees. Consideration should be given to whether an alternative small claims process could or should provide this whole panoply of remedies, and whether the new system would also allow preliminary relief to prevent impending or continuing infringement, similar to a temporary restraining order or preliminary injunction under Federal Rule of Civil Procedure 65.

These are but a few of the factors to analyze before deciding whether to move forward with a new small copyright claim system, and, if so, what that new process might be.

II. Subjects of Inquiry

The Office seeks comment on how copyright owners and defendants use the current legal system for small copyright claims, including information on the obstacles and benefits of using federal district courts. Additionally, the Office requests comment on potential alternatives for handling copyright claims that have a relatively small economic value. The Office is interested in comment on the logistics of potential alternatives, as well as the benefits and risks presented by different types of processes.

III. Conclusion

The Office hereby seeks comment from the public on factual and policy matters related to the treatment of small copyright claims. If there are any additional pertinent issues not discussed above, the Office encourages interested parties to raise those matters in their comments. In addition, the Office is considering having one or more roundtables or formal hearings on the matters raised above in the coming months. It is also likely that, following receipt of the comments in response to this Notice, the Office will publish a further Notice of Inquiry posing specific questions and possibly exploring additional alternatives.

Dated: October 24, 2011.

Maria A. Pallante,

Register of Copyrights.

[FR Doc. 2011–27824 Filed 10–26–11; 8:45 am]

BILLING CODE 1410–30–P

NATIONAL ARCHIVES AND RECORDS ADMINISTRATION

Records Schedules; Availability and Request for Comments

AGENCY: National Archives and Records Administration (NARA).

ACTION: Notice of availability of proposed records schedules; request for comments.

SUMMARY: The National Archives and Records Administration (NARA) publishes notice at least once monthly of certain Federal agency requests for records disposition authority (records schedules). Once approved by NARA, records schedules provide mandatory instructions on what happens to records when no longer needed for current Government business. They authorize the preservation of records of continuing value in the National Archives of the United States and the destruction, after a specified period, of records lacking administrative, legal, research, or other value. Notice is published for records schedules in which agencies propose to destroy records not previously authorized for disposal or reduce the retention period of records already authorized for disposal. NARA invites public comments on such records schedules, as required by 44 U.S.C. 3303a(a).

DATES: Requests for copies must be received in writing on or before November 28, 2011. Once the appraisal of the records is completed, NARA will send a copy of the schedule. NARA staff usually prepare appraisal memorandums that contain additional information concerning the records covered by a proposed schedule. These, too, may be requested and will be provided once the appraisal is completed. Requesters will be given 30 days to submit comments.

ADDRESSES: You may request a copy of any records schedule identified in this notice by contacting Records Management Services (ACNR) using one of the following means:

Mail: NARA (ACNR), 8601 Adelphi Road, College Park, MD 20740–6001.

E-mail: request.schedule@nara.gov.

Fax: 301–837–3698.

Requesters must cite the control number, which appears in parentheses after the name of the agency which submitted the schedule, and must provide a mailing address. Those who desire appraisal reports should so indicate in their request.

FOR FURTHER INFORMATION CONTACT: Laurence Brewer, Director, National Records Management Program (ACN), National Archives and Records Administration, 8601 Adelphi Road, College Park, MD 20740–6001. Telephone: 301–837–1539. *E-mail: request.schedule@nara.gov.*

SUPPLEMENTARY INFORMATION: Each year Federal agencies create billions of records on paper, film, magnetic tape, and other media. To control this accumulation, agency records managers prepare schedules proposing retention periods for records and submit these schedules for NARA's approval, using the Standard Form (SF) 115, Request for Records Disposition Authority. These schedules provide for the timely transfer into the National Archives of historically valuable records and authorize the disposal of all other records after the agency no longer needs them to conduct its business. Some schedules are comprehensive and cover all the records of an agency or one of its major subdivisions. Most schedules, however, cover records of only one office or program or a few series of records. Many of these update previously approved schedules, and some include records proposed as permanent.

The schedules listed in this notice are media neutral unless specified otherwise. An item in a schedule is media neutral when the disposition instructions may be applied to records regardless of the medium in which the records are created and maintained. Items included in schedules submitted to NARA on or after December 17, 2007, are media neutral unless the item is limited to a specific medium. (See 36 CFR 1225.12(e).)

No Federal records are authorized for destruction without the approval of the Archivist of the United States. This approval is granted only after a thorough consideration of their administrative use by the agency of origin, the rights of the Government and of private persons directly affected by the Government's activities, and whether or not they have historical or other value.

Besides identifying the Federal agencies and any subdivisions requesting disposition authority, this public notice lists the organizational unit(s) accumulating the records or indicates agency-wide applicability in the case of schedules that cover records that may be accumulated throughout an

agency. This notice provides the control number assigned to each schedule, the total number of schedule items, and the number of temporary items (the records proposed for destruction). It also includes a brief description of the temporary records. The records schedule itself contains a full description of the records at the file unit level as well as their disposition. If NARA staff has prepared an appraisal memorandum for the schedule, it too includes information about the records. Further information about the disposition process is available on request.

Schedules Pending

1. Department of Agriculture, Animal and Plant Health Inspection Service (N1–463–09–8, 2 items, 2 temporary items). Master files of an electronic information system containing import permit application and review information.

2. Department of Agriculture, Forest Service (N1–95–10–2, 161 items, 83 temporary items). Routine administrative records related to various programs throughout the agency, including general correspondence, reports, studies, plans, case files, and interagency and intergovernmental agreements. Proposed for permanent retention are rulemaking files; directives; policy files; meeting minutes of high-level staff; agency publications; press releases; audio-visual materials of a significant nature, including photographs, posters, and films; as well as plans, studies, reports, and case files of a significant nature.

3. Department of Agriculture, Risk Management Agency (N1–258–09–1, 1 item, 1 temporary item). Records of documentation, correspondence, company records, and photographs provided by agricultural producers to the agency for natural disaster evaluation under Federal crop insurance and assistance programs.

4. Department of Agriculture, Risk Management Agency (N1–258–09–2, 1 item, 1 temporary item). Consultation records with state and county offices to identify areas of concern in crop insurance programs and to adjust policies and insurance plans.

5. Department of the Army, Agency-wide (N1–AU–10–57, 1 item, 1 temporary item). Master files of an electronic information system used to schedule, manage, and track students training at the Army Logistics Management College.

6. Department of the Army, Agency-wide (N1–AU–10–60, 1 item, 1 temporary item). Master files of an electronic information system containing facility space management data.

7. Department of the Army, Agency-wide (N1–AU–10–107, 1 item, 1 temporary item). Master files of an electronic information system used to collect weapon systems acquisition data such as cost analysis, risk assessments, and contract requirements list.

8. Department of the Army, Agency-wide (N1–AU–11–6, 1 item, 1 temporary item). Master files of an electronic information system used to manage logistical issues. Included are records relating to supplies, ammunition stockpiles, and requisitioning.

9. Department of the Army, Agency-wide (N1–AU–11–7, 1 item, 1 temporary item). Master files of an electronic information system used to process military interdepartmental purchase requests. Included is such data as national stock number, requester, price, and quantity received.

10. Department of the Army, Agency-wide (N1–AU–11–10, 1 item, 1 temporary item). Master files of an electronic information system used to manage contract files. Included are purchase requests, engineering documents, amendments, and post-award documents.

11. Department of the Army, Agency-wide (N1–AU–11–14, 1 item, 1 temporary item). Master files of an electronic information system used to support the Army's financial program and budget development process. Included are table of allowances, command codes, and similar resource management information.

12. Department of the Army, Agency-wide (N1–AU–11–15, 1 item, 1 temporary item). Master files of an electronic information system used to manage manpower resources. Included is data relating to budgetary projections, organizational structure, and personnel requirements.

13. Department of the Army, Agency-wide (N1–AU–11–18, 1 item, 1 temporary item). Master files of an electronic information system used to improve readiness and reduce excess equipment and manpower for the National Guard Bureau. Included are logistical data on weapons, electronic equipment, vehicles, and medical equipment.

14. Department of the Army, Agency-wide (N1–AU–11–20, 1 item, 1 temporary item). Master files of an electronic information system used to collect and process force development financial data. Included are budget data, resource proposals, and long range planning documents.

15. Department of the Army, Agency-wide (N1–AU–11–21, 1 item, 1 temporary item). Master files of an electronic information system used to automate supply, finance, and maintenance of aircrafts. Included is budget and aircraft maintenance and repair data.

16. Department of the Army, Agency-wide (N1–AU–11–31, 2 items, 2 temporary items). Corrections system records, including records relating to notification of victims and witnesses and training records for correctional personnel.

17. Department of Defense, Defense Contract Management Agency (N1–558–10–1, 4 items, 4 temporary items). Records relating to general administrative matters, mail delivery, telecommunications, printing and duplication, and records management.

18. Department of Defense, Defense Contract Management Agency (N1–558–10–8, 8 items, 8 temporary items). Records relating to agency financial matters such as disbursements, procurement, collection of funds, financial planning, expenditure accounting, and cost accounting.

19. Department of Defense, Joint Staff and Combatant Commands (N1–218–10–5, 49 items, 37 temporary items). Comprehensive schedule covering all administrative and program areas, including general administration, organization and manpower, personnel and payroll, intelligence and security, legal matters, public affairs, operations, logistics and supply, safety, telecommunications and cryptology, international relations, information technology, medical functions, and Joint Staff Top Five officials and headquarters Combatant Command. Included are such records as staff visit files, routine Inspector General investigation files, quarterly manpower authorizations, unit manning documents, personnel counseling records, payroll correspondence, Top Secret document registers, legal opinions based on established precedent, records relating to military exercises, general safety records, telecommunications agreements, records relating to disclosure of information to foreign governments, IT systems feasibility studies, and general medical administration correspondence. Proposed for permanent retention are such records as general orders relating to issuing of military awards, records relating to agency-wide manpower needs, investigative records for significant security incidents, security classification guides, speeches of high-level officials, force protection planning records, ballistic missile defense program records, cryptology policy records, international agreements,

official histories, medical policy and guidance records, policy and planning memoranda of high-level officials, and schedules of daily activities of the Chairman and Combatant Commanders.

20. Department of Homeland Security, Transportation Security Administration (N1–560–11–2, 1 item, 1 temporary item). Correspondence, questionnaires summary analyses, and other documentation related to security assessments of high risk modes of transportation.

21. Department of Homeland Security (N1–563–11–10, 1 item, 1 temporary item). Logs, summaries, and source documents relating to monitoring non-significant incidents.

22. Department of the Interior, Office of Surface Mining and Reclamation Enforcement (N1–471–11–1, 15 items, 8 temporary items). Map folios and key maps, abandoned mine land complaint files, emergency project files, predecessor project files, borehole logs, internal daily administrative reports, aerial photographs, project related maps, and technical reference materials. Temporary records will be donated to the Commonwealth of Pennsylvania. Proposed for permanent retention are original anthracite coal mine maps, engineering drawings, scanned map folios and key maps, photographic prints, slides, motion pictures, and related indexes and finding aids.

23. Department of Justice, Bureau of Alcohol, Tobacco, Firearms, and Explosives (N1–436–11–2, 2 items, 2 temporary items). Paper and electronic versions of regulatory firearms or explosives exemptions granted to Federal licensees requesting permission to use an alternate method for production.

24. Department of Justice, Criminal Division (N1–60–08–12, 1 item, 1 temporary items), Master files of an electronic information system used to track annual registrations of gambling devices.

25. Department of Justice, Federal Bureau of Investigation (N1–65–11–11, 5 items, 5 temporary items). Accounts receivable records relating to interagency debts owed to the FBI and debt collection matters related to employees.

26. Department of Justice, Federal Bureau of Investigation (N1–65–11–26, 2 items, 2 temporary items). Intelligence analyst training logbooks documenting completion of training experiences and courses and reduction in retention period for similar training logbooks for new agents.

27. Department of Justice, Federal Bureau of Investigation (N1–65–11–35, 1 item, 1 temporary item). Master files of an electronic information system used for data analysis and reporting by the National Cyber Investigative Joint Task Force.

28. Department of Justice, National Drug Intelligence Center (N1–523–11–1, 3 items, 3 temporary items). Master files of an electronic information system used to help identify synthetic drug-related behaviors at an early stage, evaluate their likely importance, track their development, and share drug alert watches and warnings.

29. Department of the Navy, Agency-wide (DAA–NU–2011–0002, 1 item, 1 temporary item). Records documenting improvement of land and construction, including copies of contract award, project approval, surveys, and final invoices.

30. Department of Transportation, Federal Motor Carrier Safety Administration (N1–557–10–1, 3 items, 3 temporary items). Master files of electronic information systems containing information on enforcement actions, Web records, and Web content records.

31. Department of the Treasury, Alcohol and Tobacco Tax and Trade Bureau (N1–564–11–1, 1 item, 1 temporary item). Curriculum, text, guides, and other materials used for internal staff training.

32. Federal Retirement Thrift Investment Board, Office of the Executive Director (N1–474–11–1, 1 item, 1 temporary item). Monthly calendars of the executive director.

33. National Aeronautics and Space Administration, Agency-wide (DAA–0255–2011–2011–0003, 1 item, temporary item). General administrative records including work papers, agendas, statistical reports, and routine correspondence.

34. National Telecommunications and Information Administration, Office of Spectrum Management (N1–417–10–2, 45 items, 36 temporary items). Records including subject and reference files, training materials, frequency assignment applications and lists, agendas, hydrology files, routine correspondence and committee records, electronic database of Federal radio spectrum assignments, public Web pages, and database audit information. Proposed for permanent retention are records of the Interdepartment Radio Advisory Committee, docket files, Federal radio spectrum assignment records and certification requests, and spectrum analysis reports.

35. Office of Navajo and Hopi Indian Relocation, Agency-wide (N1–220–11–4, 2 items, 2 temporary items). Records of agency external Web site including design, management, and technical operation documents.

36. Office of Personnel Management, Office of the Chief Information Officer (N1–478–10–1, 2 items, 2 temporary items). Master files and outputs of an electronic information system used to track a scholarship program.

Dated: October 20, 2011.

Paul M. Wester, Jr.,

Chief Records Officer for the U.S. Government.

[FR Doc. 2011–27799 Filed 10–26–11; 8:45 am]

BILLING CODE 7515–01–P

NUCLEAR REGULATORY COMMISSION

[Project No. 753, NRC–2011–0136]

Models for Plant-Specific Adoption of Technical Specifications Task Force Traveler TSTF–510, Revision 2, ''Revision to Steam Generator Program Inspection Frequencies and Tube Sample Selection''

AGENCY: Nuclear Regulatory Commission.

ACTION: Notice of Availability.

SUMMARY: As part of the consolidated line item improvement process (CLIIP), the U.S. Nuclear Regulatory Commission (NRC) is announcing the availability of the model safety evaluation (SE) for plant-specific adoption of Technical Specifications (TS) Task Force (TSTF) Traveler TSTF–510, Revision 2, ''Revision to Steam Generator [(SG)] Program Inspection Frequencies and Tube Sample Selection.'' TSTF–510, Revision 2, is available in the Agencywide Documents Access and Management System (ADAMS) under Accession Number ML110610350, and includes a model application. The proposed change revises the Improved Standard Technical Specification (ISTS), NUREGs–1430, –1431, and –1432, Specification 5.5.9, ''Steam Generator (SG) Program,'' Specification 5.6.7, ''Steam Generator Tube Inspection Report,'' and the SG Tube Integrity specification (Limiting Condition for Operation (LCO) 3.4.17, LCO 3.4.20, and LCO 3.4.18 in ISTS NUREG–1430, –1431, and –1432, respectively). The proposed changes are necessary to address implementation issues associated with the inspection periods, and address other administrative changes and clarifications. The model SE will facilitate expedited approval of plant-specific adoption of TSTF–510, Revision 2. This TS improvement is part of the CLIIP.

ADDRESSES: You can access publicly available documents related to this notice using the following methods:

• *NRC's Public Document Room (PDR):* The public may examine and have copied for a fee publicly available documents at the NRC's PDR, Room O1–F21, One White Flint North, 11555 Rockville Pike, Rockville, Maryland 20852.

• *NRC's Agencywide Documents Access and Management System (ADAMS):* Publicly available documents created or received at the NRC are available online in the NRC Library at *http://www.nrc.gov/reading-rm/adams.html.* From this page, the public can gain entry into ADAMS, which provides text and image files of NRC's public documents. If you do not have access to ADAMS or if there are problems in accessing the documents located in ADAMS, contact the NRC's PDR reference staff at 1–800–397–4209, 301–415–4737, or by e-mail to *pdr.resource@nrc.gov.* The model SE for plant-specific adoption of TSTF–510, Revision 2, is available electronically under ADAMS Accession Number ML112101513. The NRC staff disposition of comments received to the Notice of Opportunity for Public Comment announced in the **Federal Register** on June 20, 2011 (76 FR 35923), is available electronically under ADAMS Accession Number ML112101661.

• *Federal Rulemaking Web site:* Public comments and supporting materials related to this notice can be found at *http://www.regulations.gov* by searching on Docket ID: NRC–2011–0136.

FOR FURTHER INFORMATION CONTACT: Ms. Michelle C. Honcharik, Senior Project Manager, Licensing Processes Branch, Mail Stop: O–12 D1, Division of Policy and Rulemaking, Office of Nuclear Reactor Regulation, U.S. Nuclear Regulatory Commission, Washington, DC 20555–0001; telephone: 301–415–1774, e-mail: *michelle.honcharik@nrc.gov* or Mr. Ravinder Grover, Technical Specifications Branch, Mail Stop: O–7 C2A, Division of Inspection and Regional Support, Office of Nuclear Reactor Regulation, U.S. Nuclear Regulatory Commission, Washington, DC 20555–0001; telephone: 301–415–2166, e-mail: *ravinder.grover@nrc.gov.*

SUPPLEMENTARY INFORMATION: TSTF–510, Revision 2, is applicable to pressurized water reactor plants. The proposed changes revise the ISTS to implement a number of editorial corrections, changes, and clarifications intended to improve internal consistency, consistency with the implementing industry documents, and usability without changing the intent of the requirements. The proposed changes to Specification 5.5.9.d.2 are more effective in managing the frequency of verification of tube integrity and sample selection than those required by current TSs. As a result, the proposed changes will not reduce the assurance of the function and integrity of SG tubes. TS Bases changes that reflect the proposed changes are included.

NRC staff has reviewed the model application included with TSTF–510 and has found it acceptable for use by licensees. Licensees opting to apply for this TS change are responsible for reviewing the NRC staff's SE and the applicable technical justifications, providing any necessary plant-specific information, and assessing the completeness and accuracy of their license amendment request (LAR). The NRC will process each amendment application responding to the NOA according to applicable NRC rules and procedures.

The proposed changes do not prevent licensees from requesting an alternate approach or proposing changes other than those proposed in TSTF–510, Revision 2. However, significant deviations from the approach recommended in this notice or the inclusion of additional changes to the license require additional NRC staff review. This may increase the time and resources needed for the review or result in NRC staff rejection of the LAR. Licensees desiring significant deviations or additional changes should instead submit an LAR that does not claim to adopt TSTF–510, Revision 2.

Dated at Rockville, Maryland, this 19th day of October 2011.

For the Nuclear Regulatory Commission.

John R. Jolicoeur,

Chief, Licensing Processes Branch, Division of Policy and Rulemaking, Office of Nuclear Reactor Regulation.

[FR Doc. 2011–27793 Filed 10–26–11; 8:45 am]

BILLING CODE 7590–01–P

OFFICE OF PERSONNEL MANAGEMENT

Excepted Service

AGENCY: U.S. Office of Personnel Management (OPM).

ACTION: Notice.

SUMMARY: This gives notice of OPM decisions granting authority to make appointments under Schedules A, B, and C in the excepted service as required by 5 CFR 213.103.

FOR FURTHER INFORMATION CONTACT: Roland Edwards, Senior Executive Resource Services, Executive Resources and Employee Development, Employee Services, 202–606–2246.

SUPPLEMENTARY INFORMATION: Appearing in the listing below are the individual authorities established under Schedules A, B, and C between August 1, 2011, and August 31, 2011. These notices are published monthly in the **Federal Register** at *http://www.gpoaccess.gov/fr/.* A consolidated listing of all authorities as of June 30 is also published each year. The following Schedules are not codified in the Code of Federal Regulations. These are agency-specific exceptions.

Schedule A

No Schedule A authorities to report during August 2011.

Schedule B

No Schedule B authorities to report during August 2011.

Schedule C

The following Schedule C appointments were approved during August 2011.

Agency name	Organization name	Position title	Authorization No.	Effective date
DEPARTMENT OF AGRICULTURE.	Office of the Under Secretary for Marketing and Regulatory Programs.	Confidential Assistant	DA110118	8/24/2011
	Office of the Assistant Secretary for Congressional Relations.	Special Assistant	DA110119	8/24/2011
	Office of Communications	Deputy Director of Scheduling.	DA110108	8/3/2011

Agency name	Organization name	Position title	Authorization No.	Effective date
	Office of the Under Secretary for Marketing and Regulatory Programs.	Special Assistant	DA110107	8/9/2011
DEPARTMENT OF COMMERCE.	Office of the Under Secretary	Deputy Chief of Staff for USPTO.	DC110109	8/4/2011
	Office of the General Counsel	Special Advisor	DC110105	8/2/2011
	Office of the Under Secretary	Special Assistant	DC110112	8/5/2011
	Office of the Chief of Staff	Advance Specialist	DC110115	8/12/2011
	Office of the Chief of Staff	Deputy Director of Advance.	DC110117	8/16/2011
	Office of Public Affairs	Deputy Director for Public Affairs.	DC110118	8/29/2011
COMMISSION ON CIVIL RIGHTS.	Commissioners	Special Assistant	CC110008	8/24/2011
DEPARTMENT OF DEFENSE.	Office of the Secretary	Special Assistant for Protocol.	DD110124	8/24/2011
	Office of the Under Secretary of Defense (Policy)	Staff Assistant	DD110117	8/22/2011
	Office of the Assistant Secretary of Defense (International Security Affairs).	Special Assistant for African Affairs.	DD110119	8/15/2011
DEPARTMENT OF EDUCATION.	Office of Elementary and Secondary Education	Confidential Assistant	DB110108	8/5/2011
	Office of the Under Secretary	Confidential Assistant	DB110110	8/3/2011
	Office of the Secretary	Director, White House Liaison.	DB110105	8/2/2011
	Office of the Secretary	Special Advisor	DB110109	8/3/2011
DEPARTMENT OF ENERGY.	Assistant Secretary for Congressional and Intergovernmental Affairs.	Deputy Assistant Secretary for House Affairs.	DE110125	8/2/2011
	Assistant Secretary for Congressional and Intergovernmental Affairs.	Intergovernmental Affairs Advisor.	DE110131	8/12/2011
	Office of Management	Deputy Scheduler	DE110134	8/26/2011
	National Nuclear Security Administration	Deputy Press Secretary	DE110135	8/22/2011
	Office of Public Affairs	Deputy Press Secretary	DE110138	8/31/2011
DEPARTMENT OF HEALTH AND HUMAN SERVICES.	Office of the Assistant Secretary for Public Affairs	Director of Public Health Initiatives.	DH110125	8/5/2011
DEPARTMENT OF HOMELAND SECURITY.	Office of the Assistant Secretary for Public Affairs	Deputy Press Secretary	DM110234	8/5/2011
	Office of the Assistant Secretary for Public Affairs	Press Secretary	DM110237	8/5/2011
	U.S. Immigration and Customs Enforcement	Special Assistant	DM110235	8/5/2011
	Office of the Assistant Secretary for Policy	Policy Analyst	DM110238	8/15/2011
	Office of the Assistant Secretary for Policy	Business Liaison	DM110239	8/5/2011
DEPARTMENT OF HOUSING AND URBAN DEVELOPMENT.	Office of Housing	Program Analyst	DU110033	8/26/2011
	Office of the Administration	Scheduling Assistant	DU110032	8/26/2011
DEPARTMENT OF THE INTERIOR.	Office of the Deputy Secretary	Special Assistant	DI110079	8/22/2011
DEPARTMENT OF JUSTICE.	Civil Rights Division	Senior Counsel	DJ110102	8/18/2011
	Office of Public Affairs	Press Secretary	DJ110112	8/18/2011
DEPARTMENT OF LABOR.	Office of Disability Employment Policy	Special Assistant	DL110047	8/2/2011
	Office of Public Affairs	Special Assistant	DL110048	8/2/2011
	Office of the Secretary	Special Assistant	DL110044	8/2/2011
	Office of the Secretary	Chief Economist	DL110053	8/31/2011
NATIONAL ENDOWMENT FOR THE ARTS.	National Endowment for the Arts	Senior Advisor	NA110005	8/30/2011
NATIONAL ENDOWMENT FOR THE HUMANITIES.	National Endowment for the Humanities	Special Assistant	NH110004	8/5/2011
OFFICE OF MANAGEMENT AND BUDGET.	National Security Programs	Confidential Assistant	BO110030	8/25/2011
	Office of the Director	Executive Assistant	BO110029	8/5/2011
	Office of the Director	Confidential Assistant	BO110032	8/26/2011
OFFICE OF PERSONNEL MANAGEMENT.	Office of Congressional and Legislative Affairs	Congressional Relations Officer.	PM110018	8/9/2011
	Office of Congressional and Legislative Affairs	Congressional Relations Officer.	PM110017	8/9/2011

Agency name	Organization name	Position title	Authorization No.	Effective date
	Office of the Director	Special Assistant	PM110014	8/9/2011
PRESIDENTS COMMISSION ON WHITE HOUSE FELLOWSHIPS.	Presidents Commission on White House Fellowships.	Special Assistant	WH110001	8/15/2011
SECURITIES AND EXCHANGE COMMISSION.	Office of the Chairman	Special Assistant	SE110008	8/1/2011
SMALL BUSINESS ADMINISTRATION.	Office of Communications and Public Liaison	Assistant Administrator for the Office of Communications and Public Liaison.	SB110046	8/18/2011
	Office of Capital Access	Special Advisor for Capital Access.	SB110044	8/4/2011
	Office of the Administrator	Director of Scheduling and Operations.	SB110043	8/4/2011
	Office of International Trade	Associate Administrator for International Trade.	SB110045	8/4/2011
DEPARTMENT OF STATE.	Bureau for Education and Cultural Affairs	Staff Assistant	DS110098	8/31/2011
DEPARTMENT OF TRANSPORTATION.	Associate Administrator for Policy and Governmental Affairs.	Associate Administrator for Policy and Governmental Affairs.	DT110051	8/15/2011
DEPARTMENT OF THE TREASURY.	Assistant Secretary (Public Affairs)	Spokesperson	DY110131	8/19/2011
	Assistant Secretary for Financial Markets	Senior Advisor	DY110129	8/14/2011
	Secretary of the Treasury	Advance Specialist	DY110132	8/31/2011
	Assistant Secretary (Legislative Affairs)	Special Assistant	DY110125	8/12/2011

Authority: 5 U.S.C. 3301 and 3302; E.O. 10577, 3 CFR 1954–1958 Comp., p. 218.

U.S. Office of Personnel Management.

John Berry,

Director.

[FR Doc. 2011–27746 Filed 10–26–11; 8:45 am]

BILLING CODE 6325–39–P

POSTAL REGULATORY COMMISSION

[Docket No. R2012–2; Order No. 913]

New Postal Product

AGENCY: Postal Regulatory Commission.

ACTION: Notice.

SUMMARY: The Commission is noticing a recently filed Postal Service request to include a bilateral agreement with Australia Post in the Inbound Market Dominant Multi-Service Agreements with Foreign Postal Operators 1 product offering. This document invites public comments on the request and addresses several related procedural steps.

DATES: *Comments are due:* October 27, 2011, 4:30 p.m. eastern time.

ADDRESSES: Submit comments electronically by accessing the ''Filing Online'' link in the banner at the top of the Commission's Web site (*http://www.prc.gov*) or by directly accessing the Commission's Filing Online system at *https://www.prc.gov/prc-pages/filing-online/login.aspx.* Commenters who cannot submit their views electronically should contact the person identified in the **FOR FURTHER INFORMATION CONTACT** section as the source for case-related information for advice on alternatives to electronic filing.

FOR FURTHER INFORMATION CONTACT: Stephen L. Sharfman, General Counsel, at 202–789–6820 (case-related information) or *DocketAdmins@prc.gov* (electronic filing assistance).

SUPPLEMENTARY INFORMATION:

I. Introduction
II. Notice of Filing
III. Ordering Paragraphs

I. Introduction

On October 14, 2011, the Postal Service filed a notice, pursuant to 39 CFR 3010.40 *et seq.,* that it has entered into a bilateral agreement with Australian Postal Corporation (Australia Post), which it seeks to include in the Inbound Market Dominant Multi-Service Agreements with Foreign Postal Operators 1 product.[1] The Australia Post Agreement establishes new rates for inbound letter post items in place of default Universal Postal Union rates, as well as an ancillary service for delivery confirmation scanning for inbound letter post small packets. The Postal Service contends that the instant Agreement is functionally equivalent to several agreements included within the Inbound Market Dominant Multi-Service Agreement with Foreign Postal Operators 1 product. Notice at 7–8.

In support of its Notice, the Postal Service filed two attachments as follows:

- Attachment 1—an application for non-public treatment of materials to maintain redacted portions of the agreement and supporting documents under seal; and
- Attachment 2—a redacted copy of the Australia Post Agreement.

The Postal Service also provided a redacted version of the supporting financial documentation as a separate Excel file.

Australia Post Agreement. The Postal Service filed the instant Agreement pursuant to 39 CFR 3010.40 *et seq.* The Postal Service states that the proposed inbound market dominant rates are intended to become effective on January 1, 2012. *Id.* at 2. The Australia Post Agreement provides that it becomes effective after all regulatory approvals have been received, mutual notification of such approvals, and mutual

[1] Notice of United States Postal Service of Type 2 Rate Adjustment, and Notice of Filing Functionally Equivalent Agreement, October 14, 2011 (Notice); *see also* Docket Nos. MC2010–35, R2010–5 and R2010–6, Order Adding Inbound Market Dominant Multi-Service Agreements with Foreign Postal Operators 1 to the Market Dominant Product List and Approving Included Agreements, September 30, 2010 (Order No. 549).

agreement on an effective date. *Id.* Attachment 2 at 1. The Agreement, however, may be terminated by either party on no less than 30 days' written notice. *Id.* at 3. The Postal Service and Australia Post, the postal operator for Australia, are parties to the Agreement. The portions of the Agreement at issue in this docket cover inbound letter post in the form of Letters, Flats, Small Packets, Registered Mail, and Small Packets with Delivery Scanning. *Id.* at 9.[2]

Requirements under part 3010. The Postal Service states that the financial performance of the Australia Post Agreement is provided in the Excel file included with the filing. Notice at 1–2. It contends that improvements should enhance mail efficiency and other functions for letter post items under the Agreement. *Id.* at 4.

The Postal Service asserts that the instant Agreement should not cause unreasonable harm in the marketplace since it is unaware of any significant competition in this market. *Id.* at 4–5.

Under 39 CFR 3010.43, the Postal Service is required to submit a data collection plan. The Postal Service indicates that it intends to report information on this Agreement through its Annual Compliance Report. While indicating its willingness to provide information on mailflows within the annual compliance review process, the Postal Service proposes no special data collection plan for this Agreement. With respect to performance measurement, it requests that the Commission exempt this Agreement from separate reporting requirements under 39 CFR 3055.3 and establish a standing exemption to performance reporting requirements for all contracts added to the product Inbound Market Dominant Multi-Service Agreements with Foreign Postal Operators. *Id.* at 6, 10.

The Postal Service advances reasons why the Agreement is functionally equivalent to previously filed agreements.[3] It asserts that the instant Agreement fits within the Mail Classification Schedule language for the Inbound Multi-Service Agreements with the Foreign Postal Operators 1 product. Additionally, it states that the Australian Post Agreement includes similar terms and conditions, *e.g.,* is with a foreign postal operator, conforms to a common description, and relates to rates for letter post tendered from the postal operator's territory. Notice at 8.

The Postal Service identifies a specific term, Article 22, which refers to the duration of the Agreement, that distinguishes the instant Agreement from the existing China Post Agreement (Docket No. R2010–6). This distinction is the duration that the Agreement will be in effect. *Id.* at 8–9. The Postal Service contends that the instant Agreement is nonetheless functionally equivalent to existing agreements. *Id.* at 9.

In its Notice, the Postal Service maintains that certain portions of the agreement, prices, and related financial information should remain under seal. *Id.* at 10; *id.* Attachment 1.

The Postal Service concludes that the Australian Post Agreement should be added as a functionally equivalent agreement under the Inbound Market Dominant Multi-Service Agreements with Foreign Postal Operators 1 product. Notice at 10.

II. Notice of Filing

Interested persons may submit comments on whether the Postal Service's filing in the captioned docket is consistent with the policies of 39 U.S.C. 3622 and 39 CFR 3010.40. Under rule 3010.44(a)(5), comments on the Postal Service's filing would be due October 24, 2011, 10 days after the filing of the Postal Service's Notice. Recognizing that rates under the instant Agreement are scheduled to become effective January 1, 2012, the Commission will establish October 27, 2011 as the due date for comments. The public portions of these filings can be accessed via the Commission's Web site (*http://www.prc.gov*).

The Commission appoints James F. Callow to serve as Public Representative in this docket.

III. Ordering Paragraphs

It is ordered:

1. The Commission establishes Docket No. R2012–2 to consider matters raised by the Postal Service's notice.

2. Pursuant to 39 U.S.C. 505, James F. Callow is appointed to serve as officer of the Commission (Public Representative) to represent the interests of the general public in this proceeding.

3. Comments by interested persons in this proceeding are due no later than October 27, 2011.

4. The Secretary shall arrange for publication of this order in the **Federal Register**.

By the Commission.

Shoshana M. Grove,

Secretary.

[FR Doc. 2011–27814 Filed 10–26–11; 8:45 am]

BILLING CODE 7710–FW–P

[2] Notice at 5–6. The Agreement also covers competitive products such as M–Bags, parcels, and Express Mail. *See* Docket No. CP2012–1, Notice of United States Postal Service of Filing Functionally Equivalent Inbound Competitive Multi-Service Agreement with a Foreign Postal Operator, October 17, 2011.

[3] *Id.* at 7–9. It cites the following orders: Order No. 549; Docket No. R2011–4, Order No. 700, Order Approving Rate Adjustment for HongKong Post—United States Postal Service Letter Post Bilateral Agreement Negotiated Service Agreement, March 18, 2011; Docket No. R2011–7, Order No. 871, Order Concerning an Additional Inbound Competitive Multi-Service Agreements with Foreign Postal Operators 1 Negotiated Service Agreement, September 23, 2011. *See id.* at 1 n.1.

SMALL BUSINESS ADMINISTRATION

[Disaster Declaration #12784 and #12785]

Vermont Disaster Number VT–00021

AGENCY: U.S. Small Business Administration.

ACTION: Amendment 6.

SUMMARY: This is an amendment of the Presidential declaration of a major disaster for the State of Vermont (FEMA–4022–DR), Dated 09/01/2011.

Incident: Tropical Storm Irene.

Incident Period: 08/27/2011 through 09/02/2011.

Effective Date: 10/18/2011.

Physical Loan Application Deadline Date: 11/15/2011.

EIDL Loan Application Deadline Date: 06/01/2012.

ADDRESSES: Submit completed loan applications to: U.S. Small Business Administration, Processing and Disbursement Center, 14925 Kingsport Road, Fort Worth, TX 76155.

FOR FURTHER INFORMATION CONTACT: A. Escobar, Office of Disaster Assistance, U.S. Small Business Administration, 409 3rd Street, SW., Suite 6050, Washington, DC 20416.

SUPPLEMENTARY INFORMATION: The notice of the President's major disaster declaration for the State of Vermont, dated 09/01/2011 is hereby amended to extend the deadline for filing applications for physical damages as a result of this disaster to 11/15/2011.

All other information in the original declaration remains unchanged.

(Catalog of Federal Domestic Assistance Numbers 59002 and 59008)

James E. Rivera,

Associate Administrator for Disaster Assistance.

[FR Doc. 2011–27815 Filed 10–26–11; 8:45 am]

BILLING CODE 8025–01–P

SMALL BUSINESS ADMINISTRATION

[Disaster Declaration #12899]

Delaware Disaster #DE–00012, Declaration of Economic Injury

AGENCY: U.S. Small Business Administration.

ACTION: Notice.

SUMMARY: This is a notice of an Economic Injury Disaster Loan (EIDL) declaration for the State of Delaware, dated 10/20/2011.

Incident: Flooding from Hurricane Irene.

Incident Period: 08/25/2011 through 08/31/2011.

Effective Date: 10/20/2011.

EIDL Loan Application Deadline Date: 07/20/2012.

ADDRESSES: Submit completed loan applications to: U.S. Small Business Administration, Processing and Disbursement Center, 14925 Kingsport Road, Fort Worth, TX 76155.

FOR FURTHER INFORMATION CONTACT: A. Escobar, Office of Disaster Assistance, U.S. Small Business Administration, 409 3rd Street, SW., Suite 6050, Washington, DC 20416.

SUPPLEMENTARY INFORMATION: Notice is hereby given that as a result of the Administrator's EIDL declaration, applications for economic injury disaster loans may be filed at the address listed above or other locally announced locations.

The following areas have been determined to be adversely affected by the disaster:

Primary Counties: Sussex.

Contiguous Counties:

Delaware: Kent.

Maryland: Caroline, Dorchester, Wicomico, Worcester.

The Interest Rates are:

	Percent
Businesses and Small Agricultural Cooperatives Without Credit Available Elsewhere	4.000
Non-Profit Organizations Without Credit Available Elsewhere	3.000

The number assigned to this disaster for economic injury is 128990.

The States which received an EIDL Declaration # are Delaware, Maryland.

(Catalog of Federal Domestic Assistance Number 59002)

Dated: October 20, 2011.

Karen G. Mills,

Administrator.

[FR Doc. 2011–27839 Filed 10–26–11; 8:45 am]

BILLING CODE 8025–01–P

SMALL BUSINESS ADMINISTRATION

[Disaster Declaration #12895 and #12896]

Iowa Disaster #IA–00033

AGENCY: U.S. Small Business Administration.

ACTION: Notice.

SUMMARY: This is a Notice of the Presidential declaration of a major disaster for the State of Iowa (FEMA–1998–DR), dated 10/18/2011.

Incident: Flooding.

Incident Period: 05/25/2011 through 08/01/2011.

Effective Date: 10/18/2011.

Physical Loan Application Deadline Date: 12/19/2011.

Economic Injury (EIDL) Loan Application Deadline Date: 07/18/2012.

ADDRESSES: Submit completed loan applications to: U.S. Small Business Administration, Processing and Disbursement Center, 14925 Kingsport Road, Fort Worth, TX 76155.

FOR FURTHER INFORMATION CONTACT: A. Escobar, Office of Disaster Assistance, U.S. Small Business Administration, 409 3rd Street, SW., Suite 6050, Washington, DC 20416.

SUPPLEMENTARY INFORMATION: Notice is hereby given that as a result of the President's major disaster declaration on 10/18/2011, applications for disaster loans may be filed at the address listed above or other locally announced locations.

The following areas have been determined to be adversely affected by the disaster:

Primary Counties (Physical Damage and Economic Injury Loans): Fremont, Harrison, Mills, Monona, Pottawattamie.

Contiguous Counties (Economic Injury Loans Only):

Iowa: Cass, Crawford, Ida, Montgomery, Page, Shelby, Woodbury.

Missouri: Atchison.

Nebraska: Burt, Cass, Douglas, Otoe, Sarpy, Thurston, Washington.

The Interest Rates are:

	Percent
For Physical Damage:	
Homeowners With Credit Available Elsewhere	5.375
Homeowners Without Credit Available Elsewhere	2.688
Businesses With Credit Available Elsewhere	6.000
Businesses Without Credit Available Elsewhere	4.000
Non-Profit Organizations With Credit Available Elsewhere	3.250
Non-Profit Organizations Without Credit Available Elsewhere	3.000
For Economic Injury:	
Businesses & Small Agricultural Cooperatives Without Credit Available Elsewhere	4.000
Non-Profit Organizations Without Credit Available Elsewhere	3.000

The number assigned to this disaster for physical damage is 128956 and for economic injury is 128960.

(Catalog of Federal Domestic Assistance Numbers 59002 and 59008)

James E. Rivera,

Associate Administrator for Disaster Assistance.

[FR Doc. 2011–27829 Filed 10–26–11; 8:45 am]

BILLING CODE 8025–01–P

SMALL BUSINESS ADMINISTRATION

[Disaster Declaration #12897 and #12898]

Puerto Rico Disaster #PR–00016

AGENCY: U.S. Small Business Administration.

ACTION: Notice.

SUMMARY: This is a Notice of the Presidential declaration of a major disaster for the Commonwealth of Puerto Rico (FEMA–4040–DR), dated 10/18/2011.

Incident: Tropical Storm Maria.

Incident Period: 09/08/2011 through 09/14/2011.

Effective Date: 10/18/2011.

Physical Loan Application Deadline Date: 12/19/2011.

Economic Injury (EIDL) Loan Application Deadline Date: 07/18/2012.

ADDRESSES: Submit completed loan applications to: U.S. Small Business Administration, Processing and Disbursement Center, 14925 Kingsport Road, Fort Worth, TX 76155.

FOR FURTHER INFORMATION CONTACT: A. Escobar, Office of Disaster Assistance, U.S. Small Business Administration, 409 3rd Street, SW., Suite 6050, Washington, DC 20416.

SUPPLEMENTARY INFORMATION: Notice is hereby given that as a result of the President's major disaster declaration on 10/18/2011, applications for disaster loans may be filed at the address listed above or other locally announced locations.

The following areas have been determined to be adversely affected by the disaster:

Primary Municipalities (Physical Damage and Economic Injury Loans): Juana Diaz, Naguabo, Yabucoa.

Contiguous Municipalities (Economic Injury Loans Only):

Puerto Rico: Ceiba, Coamo, Humacao, Jayuya, Las Piedras, Maunabo, Orocovis, Patillas, Ponce, Rio Grande, San Lorenzo, Santa Isabel, Villalba.

The Interest Rates are:

	Percent
For Physical Damage:	
Homeowners With Credit Available Elsewhere	5.000
Homeowners Without Credit Available Elsewhere	2.500
Businesses With Credit Available Elsewhere	6.000
Businesses Without Credit Available Elsewhere	4.000
Non-Profit Organizations With Credit Available Elsewhere	3.250
Non-Profit Organizations Without Credit Available Elsewhere	3.000
For Economic Injury:	
Businesses & Small Agricultural Cooperatives Without Credit Available Elsewhere	4.000
Non-Profit Organizations Without Credit Available Elsewhere	3.000

The number assigned to this disaster for physical damage is 128978 and for economic injury is 128980.

(Catalog of Federal Domestic Assistance Numbers 59002 and 59008)

James E. Rivera,

Associate Administrator for Disaster Assistance.

[FR Doc. 2011–27837 Filed 10–26–11; 8:45 am]

BILLING CODE 8025–01–P

SMALL BUSINESS ADMINISTRATION

Military Reservist Economic Injury Disaster Loans; Interest Rate for First Quarter FY 2012

In accordance with the Code of Federal Regulations 13—Business Credit and Assistance § 123.512, the following interest rate is effective for Military Reservist Economic Injury Disaster Loans approved on or after October 21, 2011.

Military Reservist Loan Program—4.000%.

Dated: October 19, 2011.

James E. Rivera,

Associate Administrator for Disaster Assistance.

[FR Doc. 2011–27838 Filed 10–26–11; 8:45 am]

BILLING CODE 8025–01–P

DEPARTMENT OF STATE

[Public Notice 7665]

Bureau of Educational and Cultural Affairs (ECA)

Request for Grant Proposals: The Future Leaders Exchange (FLEX) Program: Host Family and School Placement and Monitoring

Announcement Type: New Cooperative Agreement.

Funding Opportunity Number: ECA/PE/C/PY–12–06.

Catalog of Federal Domestic Assistance Number: 19.415.

Application Deadline: December 22, 2011.

Executive Summary: The Future Leaders Exchange (FLEX) program seeks to promote mutual understanding between the United States and the countries of Eurasia by providing secondary school students from the region the opportunity to live in American society for an academic year. In turn, these students will expose U.S. citizens to the culture, traditions, and lifestyles of people in Eurasia. Public and private non-profit organizations meeting the provisions described in Internal Revenue Code section 26 U.S.C. 501(c)(3) are invited to submit proposals to identify host schools; vet, select, and monitor host families; and place and monitor a portion of the students participating in the FLEX program during the 2012–13 academic year. Pending the availability of funds, an FY 2012 cooperative agreement will provide the monies required to recruit and screen host families; secure school placements; conduct student and host family orientations; provide cultural and educational enrichment activities; handle all counseling and programmatic issues; and evaluate program implementation.

I. Funding Opportunity Description Authority

Overall grant making authority for this program is contained in the Mutual Educational and Cultural Exchange Act of 1961, Public Law 87–256, as amended, also known as the Fulbright-Hays Act. The purpose of the Act is ''to enable the Government of the United States to increase mutual understanding between the people of the United States and the people of other countries * * *; to strengthen the ties which unite us with other nations by demonstrating the educational and cultural interests, developments, and achievements of the people of the United States and other nations * * * and thus to assist in the development of friendly, sympathetic and peaceful relations between the United States and the other countries of the world.'' The funding authority for the program above is provided through legislation.

Purpose: The FLEX Program seeks to provide approximately 1,000 high school students from Eurasia with an opportunity to live in the United States for the purpose of promoting mutual understanding between our countries. Participants will reside with American host families and attend high school during the 2012–13 academic year. Qualified organizations may submit proposals to administer this cooperative agreement. This solicitation refers only to FLEX high school students between the ages of 15 and 17 from the following Eurasian countries: Armenia, Azerbaijan, Georgia, Kazakhstan, Kyrgyzstan, Moldova, Russia, Tajikistan, Turkmenistan, and Ukraine.

Organizations will be responsible for identifying schools and screening families in addition to: (1) Providing English language enhancement activities for approximately 10% of their students who are specially identified; (2) orienting all students to local conditions, resources and opportunities; (3) orienting host families to program specifics; (4) providing support services for students; (5) arranging enhancement activities and skill-building opportunities; (6) monitoring student, family and coordinator performance and progress; (7) providing mid-year programming and re-entry training; and (8) evaluating project success. Preference will be given to those organizations that offer participants opportunities to develop leadership skills and raise their awareness of tolerance and civic responsibility through community activities and networks. The number of students who will participate is subject to the availability of funding in fiscal year 2012.

Goal: The goal of the program is to promote mutual understanding and foster relationships between the people of Eurasia and the United States by enabling students to:

- Gain an understanding of American culture, diversity, and respect for others with differing views and beliefs;
- Teach Americans about their home countries and cultures;
- Interact with Americans and generate enduring ties;
- Explore and acquire an understanding of the key elements of U.S. civil society, including concepts such as volunteerism, the idea that American citizens can and do act at the grassroots level to deal with societal problems, and an awareness of and respect for the Rule of Law; and

• Share and apply experiences and knowledge in their home communities as FLEX alumni, initiating activities that focus on development and community service.

Objectives: The objectives of the FLEX placement and monitoring component are:

• To place pre-selected high school students from 10 Eurasian countries in safe, qualified, well-suited host families;

• To place students in accredited schools;

• To expose program participants to American culture and enable them to obtain a broad view of U.S. society and history;

• To provide appropriate venues for program participants to share their culture, lifestyles, and traditions with U.S. citizens;

• To provide participants with development opportunities that foster leadership skills they can take back with them and use in their home countries; and

• To provide activities that will increase and enhance students' leadership capacity, enabling them—as FLEX alumni—to initiate activities in their home countries that focus on development and community service.

Other Components

Organizational Component: One organization has been awarded a grant to administer the Organizational Component of the FLEX program, and performs the following functions: Recruitment and selection of Eurasian students; preparation of cross-cultural materials; pre-departure orientation; international travel from home to host community and return; facilitation of ongoing communication between the natural parents and the placement organization, as needed; maintenance of a student database; and ongoing follow-up with alumni after their return to Eurasia.

Disability Component: Another organization is currently responsible for supporting students with disabilities. This includes a pre-program orientation, a year-end reentry training, and support throughout the year to both students and placement organizations to help students with disabilities cope with challenges specific to their circumstances. Students with disabilities may need supplementary independence skills training early on in the program. Placement organizations will be in direct communication with both the organizational and disability component organizations.

Civic Education Component: An organization will be awarded the grant for the Civic Education Workshop in approximately February/March FY 2012. The Workshop will include a week of activities in Washington, DC. ECA will offer all FLEX students the opportunity to compete for participation in this event. Placement Organizations are expected to encourage students to apply to this competition, and should help facilitate their participation if selected.

Guidelines: Applicants are requested to submit a narrative outlining a comprehensive strategy for the administration and implementation of the placement component of the FLEX program that includes the responsibilities outlined in the Project Objectives, Goals and Implementation (POGI) document and in accordance with the J-visa regulations set forth in the 22 CFR part 62: *http://ecfr.gpoaccess.gov/cgi/t/text/text-idx?c=ecfr&sid=c329fb110ea15b0bf4b16f4d88cb4d16&rgn=div5&view=text&node=22:1.0.1.7.37&idno=22#PartTop.*

An organization must be able to dedicate key staff to this program who possess a thorough understanding of the secondary school student Exchange Visitor (J-visa) Program regulations.

Your application must include a plan to place and monitor a minimum of 30 students; there is no maximum number of students that may be placed by one organization. Placements may be in any region of the United States. Strong preference will be given to organizations that choose to place participants in clusters of at least three students (these students should be from different countries) in a particular Local Coordinator's area of responsibility. Please refer to the POGI for details on essential program elements, permissible costs, and criteria used to select and place students. We anticipate cooperative agreements beginning no later than April 2012, subject to the availability of funds.

The Bureau reserves the right to reduce, revise, or increase proposal project configurations, budgets, and participant numbers in accordance with the needs of the program and the availability of funds. In addition, the Bureau reserves the right to adjust the participating countries should conditions change in a partner country or if other countries and/or regions are identified as Department priorities.

Participants will begin to arrive in their host communities in late July 2012 and remain for 10 or 11 months until their departure mid-May to late June 2013. Students with disabilities and students requiring supplementary English language instruction will be among the first to arrive.

Administration of the program must be in compliance with federal, state, and local tax reporting and withholding regulations as applicable. Recipient organizations must demonstrate regulation adherence in the proposal narrative and budget.

Applicants must submit the health and accident insurance plans they intend to use for students on this program. The Bureau offers the Accident and Sickness Program for Exchanges (ASPE) plan for students participating in the program. Placement Organizations wishing to use a different plan must demonstrate that such alternate plan a) provides comparable or more comprehensive coverage and b) costs less. Coverage must begin when students depart their home countries and not conclude until they return home. Please keep in mind that the students with disabilities who participate in the July post-arrival workshop must be covered by the Placement Organization's health insurance policy while they are participating in the workshop.

ECA Activities and Responsibilities: In a cooperative agreement, ECA is substantially involved in program activities above and beyond routine monitoring. ECA activities and responsibilities for the FLEX program include:

(1) Providing advice and assistance in the execution of all program components.

(2) Serving as liaison between the award recipients and personnel within the Department of State, including ECA, the regional bureaus, and overseas posts.

(3) Monitoring and evaluating the program and its participants through communication by email, phone, and site visits.

(4) Issuing DS–2019 forms for the participants. All participants will travel on a U.S. government designation for the J–1 Exchange Visitor Program.

(5) Creating and updating SEVIS status; maintaining all SEVIS records.

(6) Hosting an annual meeting for all award recipients to provide program guidance.

(7) Approving program promotional materials and Web site information.

(8) Representing the U.S. Government as the program sponsor at exchange events, program events, and orientations.

(9) Publicizing program highlights and responding to Congressional and Department requests for information.

II. Award Information

Type of Award: New Cooperative Agreement. ECA's level of involvement

in this program is listed under Section I above.

Fiscal Year Funds: FY 2012.

Approximate Total Funding: $8,500,000.

Approximate Number of Awards: 10–15 cooperative agreements.

Approximate Average Award: Funding level is dependent on the number of proposed students, monitoring, the quality of support, and volume of activities.

Anticipated Award Date: Pending availability of funds, April 2012.

Anticipated Project Completion Date: August 2013.

Additional Information: Pending successful implementation of this program and the availability of funds in subsequent fiscal years, it is ECA's intent to renew this cooperative agreement for two additional fiscal years, before openly competing it again.

III. Eligibility Information

III.1. Eligible applicants: Applications may be submitted by public and private non-profit organizations meeting the provisions described in Internal Revenue Code section 26 USC 501(c)(3).

III.2. Cost Sharing or Matching Funds: There is no minimum or maximum percentage required for this competition. However, the Bureau encourages applicants to provide maximum levels of cost sharing and funding in support of its programs.

When cost sharing is offered, it is understood and agreed that the applicant must provide the amount of cost sharing as stipulated in its proposal and later included in an approved agreement. Cost sharing may be in the form of allowable direct or indirect costs. For accountability, you must maintain written records to support all costs which are claimed as your contribution, as well as costs to be paid by the Federal government. Such records are subject to audit. The basis for determining the value of cash and in-kind contributions must be in accordance with OMB Circular A–110, (Revised), Subpart C.23—Cost Sharing and Matching. In the event you do not provide the minimum amount of cost sharing as stipulated in the approved budget, ECA's contribution will be reduced in like proportion.

III.3. Other Eligibility Requirements: Bureau grant guidelines require that organizations with less than four years experience in conducting international exchanges be limited to $60,000 in Bureau funding. Since an award to support program and administrative costs required to implement this exchange program for a minimum of 30 students will exceed $60,000, organizations with less than four years experience in conducting international exchanges are ineligible to apply under this competition. The Bureau encourages applicants to provide maximum levels of cost sharing and funding in support of its programs.

IV. Application and Submission Information

Please read the complete announcement before sending inquiries or submitting proposals. Once the RFGP deadline has passed, Bureau staff may not discuss this competition with applicants until the proposal review process has been completed.

IV.1. Contact Information to Request an Application Package: Please contact the Youth Programs Division, ECA/PE/C/PY, SA–5, Floor 3, U.S. Department of State, Washington, DC 20037, telephone (202) 632–6055, fax (202) 632–9355, or e-mail *FLEX@state.gov* to request a Solicitation Package. Please refer to Funding Opportunity Number ECA/PE/C/PY–12–06 (as listed at the top of this announcement) when making your request.

Alternatively, an electronic application package may be obtained from Grants.gov. Please see section IV.3f for further information.

The Solicitation Package contains the Proposal Submission Instruction (PSI) document, which consists of required application forms and standard guidelines for proposal preparation. It also contains the Project Objectives, Goals and Implementation (POGI) document, which provides specific information, award criteria and budget instructions tailored to this competition.

Please specify the Funding Opportunity Number (ECA/PE/C/PY–12–06) at the top of this announcement on all inquiries and correspondence.

IV.2. To Download a Solicitation Package via the Internet:

The entire Solicitation Package may be downloaded from the Bureau's Web site at *http://exchanges.state.gov/grants/open2.html* or from the Grants.gov Web site at *http://www.grants.gov.*

Please read all information before downloading.

IV.3. Content and Form of Submission: Applicants must follow all instructions in the Solicitation Package. The application should be submitted per the instructions under IV.3f. Application Deadline and Methods of Submission section below.

IV.3a. You are required to have a Dun and Bradstreet Data Universal Numbering System (DUNS) number to apply for a grant or cooperative agreement from the U.S. Government. This number is a nine-digit identification number, which uniquely identifies business entities. Obtaining a DUNS number is easy and there is no charge. To obtain a DUNS number, access *http://www.dunandbradstreet.com* or call 1–866–705–5711. Please ensure that your DUNS number is included in the appropriate box of the SF–424 which is part of the formal application package.

IV.3b. All proposals must contain an executive summary, proposal narrative, budget and budget narrative.

Please Refer to the Solicitation Package. It contains the mandatory Proposal Submission Instructions (PSI) document and the Project Objectives, Goals and Implementation (POGI) document for additional formatting and technical requirements.

IV.3c. All federal award recipients and sub-recipients must maintain current registrations in the Central Contractor Registration (CCR) database and have a Dun and Bradstreet Data Universal Numbering System (DUNS) number. Recipients and sub-recipients must maintain accurate and up-to-date information in the CCR until all program and financial activity and reporting have been completed. All entities must review and update the information at least annually after the initial registration and more frequently if required information changes or another award is granted.

You must have nonprofit status with the IRS at the time of application. **Please note:** Effective January 7, 2009, all applicants for ECA federal assistance awards must include in their application the names of directors and/or senior executives (current officers, trustees, and key employees, regardless of amount of compensation). In fulfilling this requirement, applicants must submit information in one of the following ways: Those who file Internal Revenue Service Form 990, ''Return of Organization Exempt From Income Tax,'' must include a copy of relevant portions of this form. Those who do not file IRS Form 990 must submit information above in the format of their choice.

In addition to final program reporting requirements, award recipients will be required to submit a one-page document, derived from their program reports, listing and describing their activities. For award recipients, the names of directors and/or senior executives (current officers, trustees, and key employees), as well as the one-page description of cooperative agreement activities, will be transmitted by the State Department to OMB, along with other information required by the Federal Funding Accountability and

Transparency Act (FFATA), and will be made available to the public by the Office of Management and Budget on its USASpending.gov Web site as part of ECA's FFATA reporting requirements.

If your organization is a private nonprofit that has not received a grant or cooperative agreement from ECA in the past three years, or if your organization received nonprofit status from the IRS within the past four years, you must submit the necessary documentation to verify nonprofit status as directed in the PSI document. If you fail to include this documentation, your proposal will be declared technically ineligible.

IV.3d. Please take into consideration the following information when preparing your proposal narrative:

IV.3d.1. Adherence to All Regulations Governing the J-Visa

The Office of Citizen Exchanges of the Bureau of Educational and Cultural Affairs is the official program sponsor of the exchange program covered by this RFGP, and an employee of the Bureau will be the ''Responsible Officer'' for the program under the terms of 22 CFR part 62, which covers the administration of the Exchange Visitor Program (J-visa). Under the terms of 22 CFR part 62, organizations receiving awards (either a grant or cooperative agreement) under this RFGP will be third parties ''cooperating with or assisting the sponsor in the conduct of the sponsor's program.'' The actions of recipient organizations shall be ''imputed to the sponsor in evaluating the sponsor's compliance with'' 22 CFR part 62. Therefore, the Bureau expects that any organization receiving an award under this competition will render all assistance necessary to enable the Bureau to fully comply with 22 CFR part 62 *et seq.*

The Bureau of Educational and Cultural Affairs places critically important emphases on the secure and proper administration of Exchange Visitor (J-visa) Programs and adherence by recipient organizations and program participants to all regulations governing the J-visa program status. Therefore, proposals should explicitly state in writing that the applicant is prepared to assist the Bureau in meeting all requirements governing the administration of J-visa programs as set forth in 22 CFR part 62. If your organization has experience as a designated J-visa program sponsor, you should discuss your record of compliance with 22 CFR part 62 *et seq.,* including the oversight of their Responsible Officers and Alternate Responsible Officers, screening and selection of program participants, provision of pre-arrival information and orientation to participants, monitoring of participants, proper maintenance and security of forms, recordkeeping, reporting and other requirements. ECA will review the record of compliance with 22 CFR part 62 *et seq.* of applicant organizations designated as Exchange Visitor Program Sponsors by ECA's Office of Private Sector Exchange as one factor in evaluating the record/ability of organizations to carry out successful exchange programs.

The Office of Citizen Exchanges of ECA will be responsible for issuing DS–2019 forms to participants in this program.

A copy of the complete regulations governing the administration of Exchange Visitor (J) programs is available at *http://exchanges.state.gov* or from: Office of Designation, Private Sector Programs Division, U.S. Department of State, ECA/EC/D/PS, SA–5, 5th Floor, 2200 C Street, NW., Washington, DC 20037.

IV.3d.2. Diversity, Freedom and Democracy Guidelines

Pursuant to the Bureau's authorizing legislation, programs must maintain a non-political character and should be balanced and representative of the diversity of American political, social, and cultural life. ''Diversity'' should be interpreted in the broadest sense and encompass differences including, but not limited to ethnicity, race, gender, religion, geographic location, socio-economic status, and disabilities. Applicants are strongly encouraged to adhere to the advancement of this principle both in program administration and in program content. Please refer to the review criteria under the ''Support for Diversity'' section for specific suggestions on incorporating diversity into your proposal. Public Law 104–319 provides that ''in carrying out programs of educational and cultural exchange in countries whose people do not fully enjoy freedom and democracy,'' the Bureau ''shall take appropriate steps to provide opportunities for participation in such programs to human rights and democracy leaders of such countries.'' Public Law 106–113 requires that the governments of the countries described above do not have inappropriate influence in the selection process. Proposals should reflect advancement of these goals in their program contents, to the full extent deemed feasible.

Funds provided through this award may not be used to promote participation in, or to purchase equipment or supplies intended for, activities related to religious worship or proselytization. Host families, school officials, and placement organizations shall not require program participants to attend religious services. However, as part of their exchange experience, participants may be offered the opportunity to take part voluntarily in this facet of their host culture, at their own discretion. Volunteer host families (who receive no financial benefit from cooperative agreement funds) are encouraged to enable participants living with them to attend services of the participant's religion, if the participant so desires and the services are available within a reasonable distance of the host family's residence.

IV.3d.3. Program Monitoring and Evaluation

Program Monitoring includes Participant Monitoring, which focuses specifically on ensuring students' safety and well-being throughout the year; see Review Criterion #5 for details and instructions. This section focuses on other aspects of Program Monitoring.

Proposals must include a plan to monitor and evaluate the project's success, both as the activities unfold and at the end of the program. The Bureau recommends that your proposal include a draft survey questionnaire or other technique plus a description of a methodology to use to link outcomes to original project objectives. The Bureau expects that the recipient organization will track participants or partners and be able to respond to key evaluation questions, including satisfaction with the program, learning as a result of the program, changes in behavior as a result of the program, and effects of the program on institutions (institutions in which participants work or partner institutions). The evaluation plan should include indicators that measure gains in mutual understanding as well as substantive knowledge.

Successful monitoring and evaluation depend heavily on setting clear goals and outcomes at the outset of a program. Your evaluation plan should include a description of your project's objectives, your anticipated project outcomes, and how and when you intend to measure these outcomes (performance indicators). The more that outcomes are ''SMART'' (specific, measurable, attainable, results-oriented, and placed in a reasonable time frame), the easier it will be to conduct the evaluation. You should also show how your project objectives link to the goals of the program described in this RFGP.

Your monitoring and evaluation plan should clearly distinguish between program *outputs* and *outcomes. Outputs* are products and services delivered, often stated as an amount. Output information is important to show the

scope or size of project activities, but it cannot substitute for information about progress towards outcomes or the results achieved. Examples of outputs include the number of people trained or the number of seminars conducted. *Outcomes,* in contrast, represent specific results a project is intended to achieve and is usually measured as an extent of change. Findings on outputs and outcomes should both be reported, but the focus should be on outcomes.

We encourage you to assess the following four levels of outcomes, as they relate to the program goals set out in the RFGP (listed here in increasing order of importance):

1. Participant satisfaction with the program and exchange experience.
2. Participant learning, such as increased knowledge, aptitude, skills, and changed understanding and attitude. Learning includes both substantive (subject-specific) learning and mutual understanding.
3. Participant behavior, concrete actions to apply knowledge in work or community; greater participation and responsibility in civic organizations; interpretation and explanation of experiences and new knowledge gained; continued contacts between participants, community members, and others.
4. Institutional changes, such as increased collaboration and partnerships, policy reforms, new programming, and organizational improvements.

Please note: Consideration should be given to the appropriate timing of data collection for each level of outcome. For example, satisfaction is usually captured as a short-term outcome, whereas behavior and institutional changes are normally considered longer-term outcomes.

Overall, the quality of your monitoring and evaluation plan will be judged on how well it (1) specifies intended outcomes; (2) gives clear descriptions of how each outcome will be measured; (3) identifies when particular outcomes will be measured; and (4) provides a clear description of the data collection strategies for each outcome (i.e., surveys, interviews, or focus groups). (Please note that evaluation plans that deal only with the first level of outcomes [satisfaction] will be deemed less competitive under the present evaluation criteria.)

Recipient organizations will be required to provide reports analyzing their evaluation findings to the Bureau in their regular program reports. All data collected, including survey responses and contact information, must be maintained for a minimum of three years and provided to the Bureau upon request.

Evaluation: The Bureau's Office of Policy and Evaluation will conduct evaluations of the FLEX program through E-GOALS, its online system for surveying program participants and collecting data about program performance. These evaluations assist ECA and its program awardees in meeting the requirements of the Government Performance Results Act (GPRA) of 1993. This Act requires federal agencies to measure the results of their programs in meeting pre-determined performance goals and objectives. Please see specific responsibilities in the accompanying POGI document.

IV.3e. Please consider the following information when preparing your budget: Applicants must submit SF–424A—''Budget Information—Non-Construction Programs'' along with a comprehensive budget for the entire program. The budget must reflect costs for a minimum of 30 participants. Please indicate clearly the number of students funded. There must be a summary budget as well as breakdowns reflecting both administrative and program budgets. Applicants may provide separate sub-budgets for each program component, phase, location, or activity to provide clarification. Proposals that demonstrate low costs per participant will be deemed more competitive.

Allowable costs for the program and additional budget guidance are outlined in detail in the POGI document.

Please refer to the Solicitation Package for complete budget guidelines and formatting instructions.

IV.3f. Application Deadline and Methods of Submission: Application Deadline Date: December 22, 2011. Reference Number: ECA/PE/C/PY–12–06

Methods of Submission

Applications may be submitted in one of two ways:

1. In hard-copy, via a nationally recognized overnight delivery service (i.e., Federal Express, UPS, Airborne Express, or U.S. Postal Service Express Overnight Mail, etc.), or
2. Electronically through *http://www.grants.gov.*

Along with the Project Title, all applicants must enter the above Reference Number in Box 11 on the SF–424 contained in the mandatory Proposal Submission Instructions (PSI) of the solicitation document.

IV.3f.1. Submitting Printed Applications

Applications must be shipped no later than the above deadline. Delivery services used by applicants must have centralized shipping identification and tracking systems that may be accessed via the Internet and delivery people who are identifiable by commonly recognized uniforms and delivery vehicles. Proposals shipped on or before the above deadline but received at ECA more than seven days after the deadline will be ineligible for further consideration under this competition. Proposals shipped after the established deadlines are ineligible for consideration under this competition. ECA will not notify you upon receipt of application. It is each applicant's responsibility to ensure that each package is marked with a legible tracking number and to monitor/confirm delivery to ECA via the Internet. Delivery of proposal packages may not be made via local courier service or in person for this competition. Faxed documents will not be accepted at any time. Only proposals submitted as stated above will be considered.

Important note: When preparing your submission please make sure to include one extra copy of the completed SF–424 form and place it in an envelope addressed to ECA–IIP/EX/PM. The original and seven (7) copies of the application should be sent to: Program Management Division (ECA–IIP/EX/PM), Ref.: ECA/PE/C/PY–12–06 SA–5, Floor 4, Department of State, 2200 C Street, NW., Washington, DC 20037.

IV.3f.2. Submitting Electronic Applications

Applicants have the option of submitting proposals electronically through Grants.gov (*http://www.grants.gov*). Complete solicitation packages are available at Grants.gov in the ''Find'' portion of the system.

Please Note: ECA bears no responsibility for applicant timeliness of submission or data errors resulting from transmission or conversion processes for proposals submitted via Grants.gov. Please follow the instructions available in the ''Get Started'' portion of the site (*http://www.grants.gov/GetStarted*).

Several of the steps in the Grants.gov registration process could take several weeks. Therefore, applicants should check with appropriate staff within their organizations immediately after reviewing this RFGP to confirm or determine their registration status with Grants.gov. Once registered, the amount of time it can take to upload an application will vary depending on a variety of factors including the size of the application and the speed of your internet connection. In addition, validation of an electronic submission via Grants.gov can take up to two business days. Therefore, we strongly recommend that you not wait until the

application deadline to begin the submission process through Grants.gov.

The Grants.gov Web site includes extensive information on all phases/aspects of the Grants.gov process, including an extensive section on frequently asked questions, located under the ''For Applicants'' section of the Web site. ECA strongly recommends that all potential applicants review thoroughly the Grants.gov Web site, well in advance of submitting a proposal through the Grants.gov system. ECA bears no responsibility for data errors resulting from transmission or conversion processes. Direct all questions regarding Grants.gov registration and submission to: Grants.gov Customer Support; Contact Center *Phone:* 800–518–4726; *Business Hours:* Monday–Friday, 7 a.m.–9 p.m. Eastern Time; *E-mail: support@grants.gov*

Applicants have until midnight (12 a.m.), Washington, DC time of the closing date to ensure that their entire application has been uploaded to the Grants.gov site. There are no exceptions to the above deadline. Applications uploaded to the site after midnight of the application deadline date will be automatically rejected by the Grants.gov system, and will be technically ineligible. Please refer to the Grants.gov Web site, for definitions of various ''application statuses'' and the difference between a submission receipt and a submission validation. Applicants will receive a validation e-mail from Grants.gov upon the successful submission of an application. Again, validation of an electronic submission via Grants.gov can take up to two business days. Therefore, we strongly recommend that you not wait until the application deadline to begin the submission process through Grants.gov. ECA will not notify you upon receipt of electronic applications. It is the responsibility of all applicants submitting proposals via the Grants.gov Web portal to ensure that proposals have been received by Grants.gov in their entirety, and ECA bears no responsibility for data errors resulting from transmission or conversion processes.

IV.3g. Intergovernmental Review of Applications: Executive Order 12372 does not apply to this program.

V. Application Review Information

V.1. Review Process

The Bureau will review all proposals for technical eligibility. Proposals will be deemed ineligible if they do not fully adhere to the guidelines stated herein and in the Solicitation Package. In addition, ECA will review the record of compliance with 22 CFR part 62 *et seq.* of applicant organizations designated as Exchange Visitor Program Sponsors by ECA's Office of Private Sector Exchange. If it is determined that an applicant organization submitting a proposal has a record of not being in compliance, their proposal will be deemed technically ineligible and receive no further consideration in the review process. If in compliance, the applicant organization's record of compliance will be used as one factor in evaluating the record/ability of organizations to carry out successful exchange programs.

All eligible proposals will be reviewed by the program office, as well as the Public Diplomacy section overseas, where appropriate. Eligible proposals will be subject to compliance with Federal and Bureau regulations and guidelines and forwarded to Bureau panels for advisory review. Proposals may also be reviewed by the Office of the Legal Adviser or by other Department elements. Final funding decisions are at the discretion of the Department of State's Assistant Secretary for Educational and Cultural Affairs. Final technical authority for assistance awards (cooperative agreements) resides with the Bureau's Grants Officer.

Review Criteria

Technically eligible applications will be competitively reviewed according to the criteria stated below and explained in detail in the POGI. These criteria are not rank ordered and all carry equal weight in the proposal evaluation:

1. Program Planning/Ability to Achieve Program Objectives
2. Support of Diversity
3. Organization's Record/Institutional Capacity
4. Multiplier Effect
5. Participant Monitoring
6. Project Evaluation
7. Cost-effectiveness/Cost Sharing

VI. Award Administration Information

VI.1. Award Notices: Final awards cannot be made until funds have been appropriated by Congress, allocated and committed through internal Bureau procedures. Successful applicants will receive a Federal Assistance Award (FAA) from the Bureau's Grants Office. The FAA and the original proposal with subsequent modifications (if applicable) shall be the only binding authorizing document between the recipient and the U.S. Government. The FAA will be signed by an authorized Grants Officer, and mailed to the recipient's responsible officer identified in the application.

Unsuccessful applicants will receive notification of the results of the application review from the ECA program office coordinating this competition.

VI.2. Administrative and National Policy Requirements: Terms and Conditions for the Administration of ECA agreements include the following:

- Office of Management and Budget Circular A–122, ''Cost Principles for Nonprofit Organizations.''
- Office of Management and Budget Circular A–21, ''Cost Principles for Educational Institutions.''
- OMB Circular A–87, ''Cost Principles for State, Local and Indian Governments.''
- OMB Circular No. A–110 (Revised), Uniform Administrative Requirements for Grants and Agreements with Institutions of Higher Education, Hospitals, and other Nonprofit Organizations.
- OMB Circular No. A–102, Uniform Administrative Requirements for Grants-in-Aid to State and Local Governments.
- OMB Circular No. A–133, Audits of States, Local Government, and Non-profit Organizations

Please reference the following Web sites for additional information:

http://www.whitehouse.gov/omb/grants

http://fa.statebuy.state.gov

VI.3. Reporting Requirements: You must provide ECA with a hard copy original plus one copy of the following reports:

(1) A final program and financial report no more than 90 days after the expiration of the award.

(2) A concise, one-page final program report summarizing program outcomes no more than 90 days after the expiration of the award. This one-page report will be transmitted to OMB, and be made available to the public via OMB's USAspending.gov Web site—as part of ECA's Federal Funding Accountability and Transparency Act (FFATA) reporting requirements.

(3) A SF–PPR, ''Performance Progress Report'' Cover Sheet with all program reports, including the SF–PPR–E and SF–PPR–F.

(4) Electronic quarterly program and financial reports, which should include both quantitative and qualitative data.

Award recipients will be required to provide reports analyzing their evaluation findings to the Bureau in their regular program reports. (Please refer to IV. Application and Submission Instructions (IV.3.d.3) above for Program Monitoring and Evaluation information.)

All data collected, including survey responses and contact information, must

be maintained for a minimum of three years and provided to the Bureau upon request.

All reports must be sent to the ECA Grants Officer and ECA Program Officer listed in the final assistance award document.

VII. Agency Contacts

For questions about this announcement, contact: Amy Schulz (*SchulzAJ@state.gov*, 202–632–6052) or Amy Simms (*SimmsAA@state.gov*, 202–632–6368), Office of Citizen Exchanges, ECA/PE/C/PY, SA–5, Floor 3, Department of State, Washington, DC 20037. All correspondence with the Bureau concerning this RFGP should reference the above title and number ECA/PE/C/PY–12–06.

Please read the complete announcement before sending inquiries or submitting proposals. Once the RFGP deadline has passed, Bureau staff may not discuss this competition with applicants until the proposal review process has been completed.

VIII. Other Information

Notice: The terms and conditions published in this RFGP are binding and may not be modified by any Bureau representative. Explanatory information provided by the Bureau that contradicts published language will not be binding. Issuance of the RFGP does not constitute an award commitment on the part of the Government. The Bureau reserves the right to reduce, revise, or increase proposal budgets in accordance with the needs of the program and the availability of funds. Awards made will be subject to periodic reporting and evaluation requirements per section VI.3 above.

Dated: October 20, 2011.

J. Adam Ereli,

Principal Deputy Assistant Secretary, Bureau of Educational and Cultural Affairs, U.S. Department of State.

[FR Doc. 2011–27731 Filed 10–26–11; 8:45 am]

BILLING CODE 4710–05–P

DEPARTMENT OF STATE

[Public Notice: 7666]

Defense Trade Advisory Group; Notice of Open Meeting

Summary: The Defense Trade Advisory Group (DTAG) will meet in open session from 1 p.m. until 4 p.m. on Wednesday, November 9, 2011, in the East Auditorium, U.S. Department of State, Harry S. Truman Building, Washington, DC. Entry and registration will begin at 12 p.m. Please use the building entrance located at 21st Street, NW., Washington, DC, between C & D Streets. The membership of this advisory committee consists of private sector defense trade representatives, appointed by the Assistant Secretary of State for Political-Military Affairs, who advise the Department on policies, regulations, and technical issues affecting defense trade. The purpose of the meeting will be to discuss current defense trade issues and topics for further study. Agenda topics will be posted on the Directorate of Defense Trade Controls' Web site, at *http://www.pmddtc.state.gov* approximately 10 days prior to the meeting. Members of the public may attend this open session and will be permitted to participate in the discussion in accordance with the Chair's instructions. Members of the public may, if they wish, submit a brief statement to the committee in writing.

As access to the Department of State facilities is controlled, persons wishing to attend the meeting must notify the DTAG Alternate Designated Federal Officer (DFO) by close of business Friday, November 4, 2011. If notified after this date, the Department's Bureau of Diplomatic Security may not be able to complete the necessary processing required to attend the plenary session. A person requesting reasonable accommodation should notify the Alternate DFO by the same date.

Each non-member observer or DTAG member that wishes to attend this plenary session should provide: His/her name; company or organizational affiliation; phone number; date of birth; and identifying data such as driver's license number, U.S. Government ID, or U.S. Military ID, to the DTAG Alternate DFO, Patricia Slygh, via email at *SlyghPC@state.gov*. A RSVP list will be provided to Diplomatic Security. One of the following forms of valid photo identification will be required for admission to the Department of State building: U.S. driver's license, passport, U.S. Government ID or other valid photo ID. Personal data is requested pursuant to Public Law 99–399 (Omnibus Diplomatic Security and Antiterrorism Act of 1986), as amended; Public Law 107–56 (USA PATRIOT Act); and Executive Order 13356. The purpose of the collection is to validate the identity of individuals who enter Department facilities. The data will be entered into the Visitor Access Control System (VACS–D) database. Please see the Privacy Impact Assessment for VACS–D at *http://www.state.gov/documents/organization/100305.pdf* for additional information.

For additional information, contact Patricia Slygh, PM/DDTC, SA–1, 12th Floor, Directorate of Defense Trade Controls, Bureau of Political-Military Affairs, U.S. Department of State, Washington, DC 20522–0112; telephone (202) 663–2830; FAX (202) 261–8199; or email *SlyghPC@state.gov*.

Dated: October 21, 2011.

Robert S. Kovac,

Designated Federal Officer, Defense Trade Advisory Group, Department of State.

[FR Doc. 2011–27804 Filed 10–26–11; 8:45 am]

BILLING CODE 4710–25–P

DEPARTMENT OF TRANSPORTATION

Federal Highway Administration

[Docket No. FHWA–2011–0104]

Emergency Temporary Closure of the I–64 Sherman-Minton Bridge Over the Ohio River Between Indiana and Kentucky

AGENCIES: Federal Highway Administration (FHWA), DOT.

ACTION: Announcement for the Indiana Department of Transportation to continue temporary closure of the I–64 Sherman-Minton Bridge over the Ohio River between Indiana and Kentucky for an indefinite period of time due to safety considerations.

SUMMARY: Pursuant to section 658.11 of title 23, Code of Federal Regulations, the Indiana Division of the Federal Highway Administration (FHWA) announces the continued closure of the I–64 Sherman-Minton Bridge over the Ohio River between Indiana and Kentucky which the Indiana Governor closed on September 9, 2011, for safety considerations. After consultation with the Indiana Department of Transportation (INDOT), the Kentucky Transportation Cabinet (KYTC), and the FHWA, it was recommended that the bridge be closed after the discovery of a crack in a critical load-carrying element of the bridge. The closure is for an indefinite period of time.

The INDOT is detouring eastbound I–64 traffic onto I–265 eastbound to I–65 southbound to cross the Ohio River and rejoin I–64 eastbound in Kentucky. The KYTC is detouring westbound I–64 traffic, bound for destinations beyond Louisville, onto northbound I–264 (or I–265) to southbound I–71 to northbound I–65 to cross the Ohio River and follow the Indiana detour.

Under title 23 of the Code of Federal Regulations, section 658.11 (Additions, deletions, exceptions, and restrictions), the FHWA can grant the closing of the Interstate system or other National Network route based upon specified

justification criteria in section 658.11(d)(2). The FHWA is also authorized to delete any route from the National Network on an emergency basis based on safety considerations pursuant to section 658.11(e).

The FHWA has decided to approve the request by the Indiana Division of the FHWA as an emergency deletion in accordance with section 658.11(e) due to the safety considerations discussed in this notice. The FHWA is requesting comments from the general public on the alternate routes selected by Indiana due to the closure.

DATES: Comments must be received on or before November 28, 2011.

ADDRESSES: Mail or hand deliver comments to the U.S. Department of Transportation, Dockets Management Facility, Room W12–140, 1200 New Jersey Avenue, SE., Washington, DC 20590, or fax comments to (202) 493–2251. Alternatively, comments may be submitted via the Federal eRulemaking Portal at *http://www.regulations.gov* (follow the on-line instructions for submitting comments). All comments should include the docket number that appears in the heading of this document. All comments received will be available for examination and copying at the above address from 9 a.m. to 5 p.m., E.T., Monday through Friday, except Federal holidays. Those desiring notification of receipt of comments must include a self-addressed, stamped postcard or you may print the acknowledgment page that appears after submitting comments electronically. All comments received into any docket may be searched in electronic format by the name of the individual submitting the comment (or signing the comment, if submitted on behalf of an association, business, labor union, *etc.*). Persons making comments may review DOT's complete Privacy Act Statement in the **Federal Register** published on April 11, 2000 (Volume 65, Number 70, Pages 19477–78), or you may view the statement at *http://dms.dot.gov.*

FOR FURTHER INFORMATION CONTACT: Mr. John C. Nicholas, Truck Size and Weight Team, Office of Operations, (202) 366–2317, Mr. Bill Winne, Office of the Chief Counsel, (202) 366–0791, Federal Highway Administration; 1200 New Jersey Avenue, SE., Washington, DC 20590, and Mr. Robert Tally, FHWA Division Administrator—Indiana Division, (317) 226–7476. Office hours for the FHWA are from 8 a.m. to 4:30 p.m., E.T., Monday through Friday, except Federal holidays.

SUPPLEMENTARY INFORMATION:

Electronic Access and Filing

You may submit or retrieve comments online through the Federal eRulemaking portal at*: http://www.regulations.gov.* The Web site is available 24 hours each day, 365 days each year. Electronic submission and retrieval help and guidelines are available under the help section of the Web site.

An electronic copy of this document may also be downloaded from Office of the Federal Register's home page at: *http://www.archives.gov/federal_register* and the Government Printing Office's Web page at: *http://www.gpoaccess.gov.*

Background

The FHWA is responsible for enforcing the Federal regulations applicable to the National Network of highways that can safely and efficiently accommodate the large vehicles authorized by provisions of the Surface Transportation Assistance Act of 1982, as amended, designated in accordance with 23 CFR part 658 and listed in Appendix A. In accordance with section 658.11, the FHWA may approve deletions or restrictions of the Interstate system or other National Network route based upon specified justification criteria in section 658.11(d)(2). Additionally, the FHWA has the authority to initiate the deletion of any route from the National Network, on an emergency basis, for safety considerations.

The I–64 Sherman-Minton Bridge was undergoing a retrofit construction project when a crack was discovered in a critical load-carrying element of the bridge. After consultation with Indiana and Kentucky transportation officials and the FHWA, the Governor of Indiana closed the bridge immediately.

The closure of the I–64 Sherman-Minton Bridge has affected traffic throughout the Louisville and Southern Indiana region. The closed bridge carried an Average Daily Traffic (ADT) count of 80,000 vehicles. The I–65 Kennedy Bridge has an ADT of 130,000 vehicles. The additional traffic on I–65 due to the Sherman-Minton Bridge closure has increased delays in crossing over the Ohio River. The 2010 FHWA Freight Performance Measures Initiatives report ranked the I–65 at I–64/I–71 interchange as the nineteenth worst out of 250 national freight congestion locations.

The Indiana and Kentucky State transportation officials have implemented official detours via the Interstate network. Traffic on eastbound I–64 in Indiana is detoured via I–265 eastbound and I–65 southbound. The traffic on I–65 southbound continues south to cross the Ohio River on the I–65 Kennedy Bridge to access downtown Louisville or rejoin I–64. Motorists also have the option to use the US 31 Clark Memorial Bridge, locally known as the Second Street Bridge, to cross the Ohio River into downtown Louisville. Traffic on westbound I–64 in Kentucky is detoured, via I–264 (or I–265) northbound to I–71 westbound to I–65 northbound. The traffic on I–65 northbound crosses the Ohio River on the Kennedy Bridge and continues north to I–265 westbound to rejoin I–64.

To reduce Interstate ramp merging delays, some ramps in the area have been closed. The KYTC closed the ramp from I–64 westbound to I–65 northbound. The INDOT closed the ramp from I–265 westbound to I–65 southbound. Additionally, INDOT has increased the number of lanes on key ramps to lessen bottlenecks on the ramp systems. The I–64 eastbound to I–265 eastbound ramp, the I–265 westbound to I–64 westbound ramp, and the I–265 eastbound to I–65 southbound ramp were widened from one to two lanes. To improve the peak period traffic flow into downtown Louisville during the morning, one lane of the four lane US–31 Clark Memorial Bridge is being used as a reversible lane. This measure allows for three lane openings into Louisville during the peak period in the morning.

The INDOT and the KYTC have coordinated plans with local governments on both sides of the Ohio River. The INDOT and the KYTC met with local transportation officials and police agencies immediately after the closure to prepare for the anticipated overflow of traffic from the official detour route on the Interstates to the local network. Such coordination is continuing as changes are being made to improve travel in the area. Police agencies in the region are also assisting.

The INDOT is warning motorists of the closure and delays via electronic message boards in Indianapolis, Evansville, and throughout southern Indiana. The KYTC is warning motorists of the closure and delays in Lexington and throughout southern Kentucky. The Illinois Department of Transportation is using such boards to notify drivers of the closure near the junction of I–57 and I–64. Additionally, the INDOT has contacted regional Traffic Management Centers in Cincinnati and St. Louis regarding the I–64 closure. All Louisville area electronic message boards are being used to notify drivers of the closure, detours, and delay notices.

To assist in facilitating interstate commerce, the INDOT and the KYTC

are coordinating with local trucking associations to minimize freight traffic disruptions. The Indiana Department of the Revenue and the INDOT have suspended all oversize permits routed on I–64 and are redirecting permitted loads to cross the Ohio River at the following locations: Evansville US 41 Bridge, Rockport US 231 Bridge, and Lawrenceburg I–275 Bridge.

The KYTC is currently directing oversize and overweight permitted loads to avoid all of the Louisville bridges and seek alternate routes. Interested parties may apply for such permits to cross the Ohio River at the following locations: Henderson US 41 Bridge, Paducah I–24 Bridge, Owensboro US 231 Bridge, and Northern KY I–275 Bridge.

Commercial motor vehicles of the dimensions and configurations described in 23 CFR 658.13 and 658.15 which serve the affected area may use the alternate routes listed above. Vehicles servicing the businesses bordering the impacted area will still be able to do so by also using the alternate routes noted above and local signage to circulate around the restricted area.

The United States Coast Guard has not placed any restrictions on the Ohio River traffic around the area of the Sherman-Minton Bridge at this time.

Authority: 23 U.S.C. 127, 315 and 49 U.S.C. 31111, 31112, and 31114; 23 CFR part 658.

Issued on: October 19, 2011.

Victor M. Mendez,

Administrator.

[FR Doc. 2011–27785 Filed 10–26–11; 8:45 am]

BILLING CODE 4910–22–P

DEPARTMENT OF TRANSPORTATION

Pipeline And Hazardous Materials Safety Administration

Office of Hazardous Materials Safety; Notice of Application for Special Permits

AGENCY: Pipeline and Hazardous Materials Safety Administration (PHMSA), DOT.

ACTION: List of applications for special permits.

SUMMARY: In accordance with the procedures governing the application for, and the processing of, special permits from the Department of Transportation's Hazardous Material Regulations (49 CFR Part 107, Subpart B), notice is hereby given that the Office of Hazardous Materials Safety has received the application described herein. Each mode of transportation for which a particular special permit is requested is indicated by a number in the ''Nature of Application'' portion of the table below as follows: 1—Motor vehicle, 2—Rail freight, 3—Cargo vessel, 4—Cargo aircraft only, 5—Passenger-carrying aircraft.

DATES: Comments must be received on or before November 28, 2011.

Address Comments To: Record Center, Pipeline and Hazardous Materials Safety Administration, U.S. Department of Transportation, Washington, DC 20590.

Comments should refer to the application number and be submitted in triplicate. If confirmation of receipt of comments is desired, include a self-addressed stamped postcard showing the special permit number.

FOR FURTHER INFORMATION CONTACT: Copies of the applications are available for inspection in the Records Center, East Building, PHH–30, 1200 New Jersey Avenue, SE., Washington, DC or at *http://regulations.gov.*

This notice of receipt of applications for special permit is published in accordance with Part 107 of the Federal hazardous materials transportation law (49 U.S.C. 5117(b); 49 CFR 1.53(b)).

Issued in Washington, DC, on October 5, 2011.

Donald Burger,

Chief, General Approvals and Permits.

Application number	Docket No.	Applicant	Regulation(s) affected	Nature of special permits thereof
		NEW SPECIAL PERMITS		
14558–N		Southern States LLC	49 CFR 49 CFR Parts 171–181; 49 CFR 172.301 (c); and 173.304.	To authorize the transportation in commerce of specially designed non-DOT specification cylinders containing compressed sulfur hexafluoride. (modes 1, 2, 3, 4.)
15461–N		Kidde Products High Bentham, Yo.	49 CFR 171.23	To authorize the transportation in commerce of non-DOT specification cylinders containing a Division 2.2 compressed gas. (modes 1, 2, 3.)
15464–N		Alliant Techsystems Operations, LLC. Eden Prairie, MN.	49 CFR 173.56	To authorize the transportation in commerce of ammunition and components that have been combined with non-hazardous materials and are being transported as hazardous waste without a new EX classification. (mode 1.)
15468–N		Prism Helicopters Inc. Wassilla, AK.	49 CFR 172.101 Column (9B).	To authorize the transportation in commerce of certain Class 1 explosive materials which are forbidden for transportation by air, to be transported by cargo aircraft within the State of Alaska when other means of transportation are impracticable or not available. (mode 4.)
15469–N		B.J. Alan Company Youngstown, OH.	49 CFR 173.62	To authorize the transportation in commerce of certain fireworks in large packagings. (mode 1.)
15470–N		Wilson Construction Company Canby, OR.	49 CFR 172.101 Column (9B), 172.204 (c)(3), 173.27 (b)(2), 175.30 (a)(1), and 172.200.	To authorize the transportation in commerce of certain hazardous materials by cargo aircraft including by external load in remote areas of the US without being subject to hazard communication requirements and quantity limitations where no o0ther means of transportation is available. (mode 4.)

Application number	Docket No.	Applicant	Regulation(s) affected	Nature of special permits thereof
15471–N	.....	National Aeronautics & Space Administration (NASA) Washington, DC.	49 CFR 173.172	To authorize the transportation in commerce of a Space Shuttle Orbiter Auxiliary Power Unit subsystem fuel propellant tank containing the residue of Hydrazine, anhydrous which does not meet the requirements of 49 CFR 173.172. (mode 1.)
15473–N	.....	Eagle Helicopters Inc. dba Kachina Aviation Nampa, ID.	49 CFR 172.101 Column (9B), 172.204 (c)(3), 173.27 (b)(2), 175.30 (a)(1), and 172.200.	To authorize the transportation in commerce of certain hazardous materials by cargo aircraft including by external load in remote areas of the U.S. without being subject to hazard communication requirements and quantity limitations where no other means of transportation is available. (mode 4.)

[FR Doc. 2011–27112 Filed 10–26–11; 8:45 am]

BILLING CODE 4909–60–M

FEDERAL REGISTER

Vol. 76 Thursday,

No. 208 October 27, 2011

Part II

Department of Interior

Fish and Wildlife Service

50 CFR Part 17

Endangered and Threatened Wildlife and Plants; Removal of the Concho Water Snake From the Federal List of Endangered and Threatened Wildlife and Removal of Designated Critical Habitat; Final Rule

DEPARTMENT OF THE INTERIOR

Fish and Wildlife Service

50 CFR Part 17

[FWS–R2–ES–2008–0080; 92220–1113–0000–C6]

RIN 1018—AU97

Endangered and Threatened Wildlife and Plants; Removal of the Concho Water Snake From the Federal List of Endangered and Threatened Wildlife and Removal of Designated Critical Habitat

AGENCY: Fish and Wildlife Service, Interior.

ACTION: Final rule.

SUMMARY: The best available scientific and commercial data indicate that the Concho water snake (*Nerodia paucimaculata*), a reptile endemic to central Texas, is recovered. Therefore, under the authority of the Endangered Species Act of 1973, as amended (Act), we, the U.S. Fish and Wildlife Service (Service) remove (delist) the Concho water snake from the Federal List of Endangered and Threatened Wildlife, and accordingly, also remove its federally designated critical habitat. This determination is based on a thorough review of all available information, including new information, which indicates that the threats to this species have been eliminated or reduced to the point that the species has recovered and no longer meets the definition of threatened or endangered under the Act. We are also providing notice that the final post-delisting monitoring for the Concho water snake has been completed.

DATES: This final rule becomes effective on November 28, 2011.

ADDRESSES: The proposed rule, all comments received, the post-delisting monitoring plan, and this final rule are all available on the Internet at *http://www.regulations.gov* and *http://www.fws.gov/southwest/es/AustinTexas/*. Supporting documentation we used in preparing this final rule will be available for public inspection, by appointment, during normal business hours, at the U.S. Fish and Wildlife Service, Austin Ecological Services Field Office, 10711 Burnet Road, Suite 200, Austin, TX 78758; telephone 512–490–0057; facsimile 512–490–0974.

FOR FURTHER INFORMATION CONTACT: Adam Zerrenner, Field Supervisor, U.S. Fish and Wildlife Service, Austin Ecological Services Field Office (see **ADDRESSES**). If you use a telecommunications device for the deaf (TDD), call the Federal Information Relay Service (FIRS) at 800/877–8339.

SUPPLEMENTARY INFORMATION:

Background

It is our intent to discuss in this final rule only those topics directly relevant to the removal of the Concho water snake from the Federal list of threatened species under the Endangered Species Act of 1973, as amended (Act; 16 U.S.C. 1531 *et seq.*). The Concho water snake is endemic to the Colorado and Concho Rivers in central Texas (Tennant 1984, p. 344; Scott *et al.* 1989, p. 373). It occurs on the Colorado River from E.V. Spence Reservoir to Colorado Bend State Park, including Ballinger Municipal Lake and O.H. Ivie Reservoir, and on the Concho River from the City of San Angelo, Texas, to its confluence with the Colorado River at O.H. Ivie Reservoir. At the time the species was listed as threatened in 1986 (51 FR 31412), there were considered to be two subspecies of *Nerodia harteri,* the Concho water snake (*N.h. paucimaculata*) and the Brazos water snake (*N.h. harteri*). Densmore *et al.* (1992, p. 66) determined the Concho water snake was a distinct species, and in 1996 we changed our reference to the species to recognize the scientific name *N. paucimaculata* (50 CFR 17.11). Some authors use the common name of Concho watersnake, based on Crother (2000, p. 67). However, this has not been universally adopted, so we continue to use Concho water snake in this rule. For more background information on the Concho water snake, refer to the proposed delisting rule published in the **Federal Register** on July 8, 2008 (73 FR 38956), the final listing rule published in the **Federal Register** on September 3, 1986 (51 FR 31412), Campbell (2003, pp. 1–4), the 2004 revised biological opinion (BO) on water operations on the Concho and Colorado Rivers (Service 2004, pp. 1–76), and the 1993 Concho Water Snake Recovery Plan available online at *http://ecos.fws.gov/docs/recovery_plan/930927b.pdf.* We note that research conducted since the recovery plan was completed in 1993 has provided new information on the species.

Previous Federal Actions

In June 1998, we received a petition from the Colorado River Municipal Water District (District) to delist the Concho water snake because our original data (regarding snake distribution and abundance and threats) for listing the snake were in error. On August 2, 1999, we published a 90-day petition finding (1999 petition finding) that the petitioner did not present substantial information indicating that delisting the species may be warranted (64 FR 41903). The petition did not contain any information addressing the threats to the species nor did it include a discussion of the three recovery criteria. As a result of the negative 90-day finding, we did not conduct a full status review at that time. However, in the process of revising the biological opinion under section 7 of the Act for the operations of the upper Colorado River dams in 2004 (Service 2004a), the Service determined there was sufficient new information available to warrant a status review of the species. This final rule constitutes the conclusion of a full status review of the Concho water snake and analyzes all of the outstanding concerns from the 1999 petition finding.

On July 8, 2008, we published a proposed rule to remove the Concho water snake from the list of threatened species (73 FR 38956). A draft of the post-delisting monitoring plan was made available for public review and comment on September 23, 2009 (74 FR 48595).

Additional background information regarding other previous Federal actions for the Concho water snake can be obtained by consulting the species' regulatory profile found at: *http://ecos.fws.gov/speciesProfile/SpeciesReport.do?spcode=C04E.*

Recovery

Section 4(f) of the Act directs us to develop and implement recovery plans for listed species unless the Director determines that such a plan will not benefit the conservation of the species. The Service completed the Concho Water Snake Recovery Plan in 1993 (Service 1993). The Concho Water Snake Recovery Plan outlines recovery criteria to assist in determining when the snake has recovered to the point that the protections afforded by the Act are no longer needed (Service 1993, p. 33). These criteria are: (1) Adequate instream flows are assured even when the species is delisted. (2) Viable populations are present in each of the three major reaches (the Colorado River above Freese Dam (forms O.H. Ivie Reservoir), Colorado River below Freese Dam, and the Concho River). Here, population is defined as all Concho water snakes in a given area, in this case, each major river reach. (3) Movement of an adequate number of Concho water snakes is assured to counteract the adverse impacts of population fragmentation. These movements should occur as long as Freese Dam is in place or until such time that the Service determines that Concho water snake populations in the

three reaches are viable and ''artificial movement'' among them is not needed.

We used the recovery plan to provide guidance to the Service, State of Texas, and other partners on methods to minimize and reduce the threats to the Concho water snake and to provide criteria that could be used to help determine when the threats to the Concho water snake had been reduced so that it could be removed from the Federal List of Endangered and Threatened Wildlife.

Provisions in recovery plans are recommendations that are not binding and can be superseded by more current scientific information. There are many paths to accomplishing recovery of a species in all or a significant portion of its range. The main goal is to remove the threats to a species, which sometimes may occur without meeting all recovery criteria contained in a recovery plan. For example, one or more criteria may have been exceeded while other criteria may not have been accomplished. In that instance, the Service may judge that, overall, the threats have been reduced sufficiently, and the species is robust enough, to reclassify the species from endangered to threatened or perhaps to delist the species. In other cases, recovery opportunities may be recognized that were not known at the time the recovery plan was finalized. Achievement of these opportunities may result in progress toward recovery in lieu of methods identified in the recovery plan. Likewise, we may learn information about the species that was not known at the time the recovery plan was finalized. The new information may change the extent that criteria need to be met for recognizing recovery of the species. Overall, recovery of a species is a dynamic process requiring adaptive management. Judging the degree of recovery of a species is also an adaptive management process that may, or may not, fully follow the guidance provided in a recovery plan.

A review of the best scientific and commercial data currently available (see Summary of Factors Affecting the Species section below) indicates that all three criteria in the Concho water snake recovery plan (adequate instream flows even after delisting, viable populations in each of the three major river reaches, and movement of snakes to assure adequate genetic mixing) have been met. Further, recovery of the Concho water snake has been a dynamic process, which has been fostered by the significant amount of new data collected on the biology and ecology of the species by numerous species experts. Since the time of listing and preparation of the recovery plan, biologists have discovered that the snakes are able to persist and reproduce along the shorelines of reservoirs and that the snakes have managed to persist in all three population segments, surviving many years of drought. Including this new information, the analysis below considers the best available data in determining that the Concho water snake no longer meets the definition of a threatened or endangered species.

Summary of Comments and Recommendations

In our proposed rule (71 FR 38956), we requested comments from the public on the proposed removal of the Concho water snake from the list of threatened species during a 60-day comment period that ended on September 8, 2008. We also contacted Federal agencies, State agencies, local officials, and congressional representatives to invite comment on the proposed rule.

During the public comment period, we received no requests for a public hearing and none was held. Overall we received 23 written comments from the public. Twenty of these were similar letters that supported removal of the species from the protected list and stated that our decision to delist the Concho water snake was based on sound science. Two of these letters of support came from the Texas Department of Transportation (TxDOT) and Texas Parks and Wildlife Department (TPWD). Six of these letters were from city officials, ten were from river authorities or water districts, including the Colorado River Municipal Water District (District), and two were from private businesses. We also received one nonsubstantive comment and two substantive critical comments from professional biologists (one specifically expressed opposition to the proposal). Our responses are provided below to a summary of each substantive comment received.

Peer Review

In accordance with our policy published on July 1, 1994 (59 FR 34270), we solicited independent expert opinions from knowledgeable individuals with scientific expertise that included ecology of water snakes, conservation biology principles, and river hydrology. Out of seven individuals that agreed to provide peer review, we received six peer review comments. One peer reviewer stated support for the proposal. Three peer reviewers were noncommittal on their support, but provided many substantive comments and questions. Two peer reviewers stated opposition to the proposal and provided substantive criticism. Our responses are provided below to a summary of each substantive comment received from the peer reviewers.

Comments From Peer Reviewers

(1) Comment: It is premature to delist the Concho water snake because essential data are lacking. For example, no data are presented on population structure, demographics, trends, or genetics.

Our Response: The Act requires us to consider the best available information when making decisions on what species should be protected. Population demographic estimates have been reported for the Concho water snake (Whiting *et al.* 2008, pp. 441–442). While more quantitative analysis of population structure, trends, and genetics would be informative and useful to us in formulating this rule, we believe the data used in this final rule support our decision because it is derived from many years of monitoring collections (Thornton 1996, pp. 26–50, Forstner *et al.* 2006, p. 18) and consistent with the opinion of most experts on the Concho water snake. Reference the following sections below for descriptions of the best available information related to population structure, demographics, and genetics: *A. The Present or Threatened Destruction, Modification, or Curtailment of Its Habitat or Range,* Habitat Modification from Fragmentation; and *Application of the Recovery Plan's Criteria,* Population Viability. We find that the best available information supports the decision that the Concho water snake has recovered and no longer qualify as threatened.

Past studies of the Concho water snake were intended to monitor the populations over time using mark-recapture techniques (that is, inserting a tag in captured snakes so that individuals can be identified when they are recaptured). Although these studies by the District (summarized in District 1998) resulted in a large number of snakes collected over 10 years (9,069 unique snakes), the study did not quantify the amount of effort expended during each survey, so that reliable population estimates or trends over time could not be calculated. Whiting *et al.* (2008) utilized these data to attempt to model population trends. However, the results proved too unreliable to effectively model population trends because the dispersal rates of snakes out of the study areas were not quantified. This resulted in a potential overestimate of the death rate of snakes that were not recaptured, when they could have, in fact, simply moved out of the study area

(Whiting *et al.* 2008, p. 443). The original study was not designed to accommodate a population viability analysis and attempts to do so provided results with an unacceptable degree of uncertainty and with imprecise conclusions. As a result, the best available information on snake populations supports that the snakes have persisted over a long time period throughout the majority of their historic range and have continued to persist following habitat alterations from reservoir inundation and drought.

(2) Comment: The Concho water snake occupies an extremely small area of Texas, and one small mistake could easily cause the extinction in a significant portion (i.e., all) of its range. It is better to err on the side of caution than face the consequences of early protection removal.

Our Response: The current range of the snake is estimated to total about 280 miles (mi) (451 kilometers (km)) of river and about 40 mi (64 km) of reservoir shoreline. The best available information, including the reports of species experts (in particular Dr. James Dixon and Dr. Michael Forstner), does not indicate that the species is vulnerable to extinction. The recent studies available to us report that the species is capable of withstanding significant environmental perturbations (Dixon 2004, pp. 10–11; Forstner *et al.* 2006, pp. 16–18; Whiting *et al.* 2008, p. 343). Under our post-delisting monitoring plan, we will be monitoring the status of the species and can emergency list it if necessary (see the Post-Delisting Monitoring Plan section below).

(3) Comment: My strong conclusion is that viable populations of the Concho water snake have not been demonstrated. Documentation of persistence and reproduction is not adequate to determine population viability.

Our Response: Please see our response below to *Comment (28).* We have updated the discussion of viable population in the final rule to be more consistent with the description used in the recovery plan for the species (see *Application of the Recovery Plan's Criteria* section below).

(4) Comment: Survey results from Dixon (2004) and Forstner *et al.* (2006) failed to find snakes at some sample sites, indicating possible local extinctions and suggesting that recovery criterion 2 for viable populations has not been met and site occupancy may have decreased by 23 to 27 percent.

Our Response: Dixon made only one sampling visit to 13 sites and found Concho water snakes at all but 3 sites (Dixon 2004, pp. 4–5). Forstner *et al.* (2006, pp. 6–7, 12) surveyed several sites up to three times in 2005. They found snakes at all sites except for three sites on the Concho River, which were only sampled one time following a rainstorm event making detection difficult (Forstner *et al.* 2006, p. 12). In contrast, earlier studies (District 1998, p. 13) resulted in consistent captures of snakes at nearly all sites surveyed, however, those sites were sampled three times or more annually. Both Dixon (2004, pp. 9, 14–15) and Forstner *et al.* (2006, p. 13) explain that there are a variety of field conditions that influence the ability to capture snakes at a given time and location. Variability of sampling success is common in field investigations, and both of these reports consisted of sampling efforts too small to interpret negative capture data as local extinctions or a decline in site occupancy.

(5) Comment: I agree with the proposed rule to delist the Concho water snake, although I don't know if I believe that the Concho water snake has ''recovered'' as much as it continues to persist despite marked modifications to its habitat along the Colorado and Concho rivers. The snake is more of a habitat generalist than originally thought, and successful reproduction takes place under lower stream flows than previously indicated. The 2008 Memorandum of Understanding (MOU) between the Service and the Colorado Municipal Water District ensures adequate stream flows, although it may be strained by drought conditions. Twenty years of field studies demonstrate continued reproductive success in both the Concho and Colorado Rivers, including reservoirs. Dixon (2004) reports finding that dense vegetation and beavers failed to impede reproduction at the Freese Dam site, and he found the Elm Creek site, devoid of water for three years, still contained a reproducing population.

Our Response: We agree that the best available information supports the decision to remove the Concho water snake from the list of threatened species under the Act. We recognize that our understanding of the snake's ecology has benefitted from new information that has been collected since the listing and since the recovery plan was completed. The removal of the snake from the list of threatened species is due both to recovery actions, such as the 2008 MOU with the District, and new biological information on the species' ability to persist in habitats such as reservoirs and no change (or slight increase) in the species' known range (about 80 river miles more than known at the time of listing).

(6) Comment: The proposed rule uses an inappropriate timeframe for analysis of factors that could affect the species in the future. Factors that are not considered threats on a 20-year timeframe may threaten the species on a more meaningful timeframe of 50–100 years, which is consistent with the recovery plan.

Our Response: We agree the 20-year foreseeable future was not a sufficiently long timeframe for our analysis. We have updated the rule to evaluate the threats to the species considering longer timeframes, as available information allows. In considering the foreseeable future in the threats analysis, we generally regarded 50 to 100 years as a time frame where some reasonable predictions could be made. This range of time originated from the analysis of forecasting for water management, which is looking ahead to expected conditions in the year 2060 (TWDB 2007, p. 2), and consideration of climate change models, which typically forecast 50 to 100 years into the future (Bernstein *et al.* 2007, pp. 8–9; Jackson 2008, p. 8; Mace and Wade 2008, p. 656).

(7) Comment: Lake populations are not as robust as the river populations (low densities via low recruitment), and their mere presence is not an indicator of population health. Lake populations appear to be isolated sinks and there may not be riverine recruitment from these populations. Due to the relatively recent appearance of the lakes, the data are only isolated snapshots and more monitoring is necessary before we know the true effects of river modification on Concho water snake populations.

Our Response: Recruitment is the successful influx of new members into a population by reproduction or immigration (Lincoln *et al.* 1998, p. 257). Sinks are populations or breeding groups that do not produce enough offspring to maintain themselves without immigrants from other populations. Please see our responses to *Comments (1)* and *(28)* for related information. Dixon (2004, p. 14) states that both reservoirs (Ivie and Spence) provide prime habitat for Concho water snakes along the rocky shorelines. Whiting *et al.* (1997, p. 331) found over 300 individual snakes in Lake Spence 20 years after the reservoir was filled. Also, analysis by Whiting *et al.* (2008, pp. 439, 443) found no evidence of a difference in survival among the five subpopulations (including three riverine reaches and two reservoirs). This suggests there may be no difference in survival rates between reservoir and

riverine snake populations, although the authors recognize that the data from reservoirs were not sufficient for reliable estimates of snake survival and population growth (Whiting *et al.* 2008, p. 443).

Successful use of the reservoirs by Concho water snakes is one factor we considered in this decision and provides some added assurance that the snakes are not likely to become endangered in the foreseeable future. It is not unexpected that populations of the snakes in the artificial habitat of the reservoirs may not be as robust by some measures compared with populations in the natural riverine habitat. However, we have no information that indicates the snakes in reservoirs are population sinks. We know that the snakes have been shown to persist and reproduce in Spence Reservoir for at least 35 years after construction (1969 to 2005) and in Ivie Reservoir for at least over 15 years after construction (1989 to 2005) (Forstner *et al.* 2006, p. 12). The Service finds that this is a sufficient amount of time to determine that snakes are likely to continue to persist in reservoirs in the foreseeable future.

(8) Comment: Evidence of successful reproduction from Forstner *et al.* (2006) is based on flawed analysis of mass-length relationships for female snakes. This relationship is curvilinear (represented by a curved, rather than straight, line) and, therefore, the data should have been log transformed or fit using a power function rather than a simple linear analysis. Based on this, at most only one of the four females found by Forstner *et al.* (2006) appears to have low mass suggesting a post-partum state that indicates reproduction. Also, since evidence of reproduction was found at only a single site below Freese Dam (Ivie Reservoir) by Forstner *et al.* (2006), it is premature to conclude that a viable population exists in this reach.

Our Response: We agree that the use of a curvilinear function analysis would have been more statistically robust in the Forstner *et al.* (2006, p. 11) report to evaluate reproductive status of females. However, this analysis was not intended to make a strong statistical argument, but simply to substantiate the field observations of females appearing to be post-partum. These adult female snakes had lower body tone in the rear third of the body indicating (in the authors' experience with this taxon and with snakes in general) that recent offspring had been released. Although access to the river reach downstream of Freese Dam (Ivie Reservoir) was limited due to private property, Forstner *et al.* (2006, p. 18) conclude that, even with limited samples, snakes were found at the two sites available in this reach documenting that the species was persisting and reproducing in this reach. This information serves to confirm the results of the earlier 10 years of monitoring studies that found large numbers of snakes in this reach, and throughout the species' current range.

(9) Comment: The simple interpretation of lambda (λ, a calculation of the finite rate of population increase) from Whiting *et al.* (2008) using the preferred stage-based model ($\lambda = 0.67$ to 0.78) is that the species is declining 22 to 33 percent per generation. This, in addition to low survivorship of neonates, is strong evidence that Concho water snake populations are not viable.

Our Response: Whiting *et al.* (2008, p. 443) explains that the modeling results of the finite rate of increase from the mark-recapture study were biased low due to the effect of dispersal of snakes out of the study areas, and this is what produced the low estimate of λ. Since dispersal rates were not measured in the study, the analysis resulted in a large standard error and imprecise conclusions with high uncertainty. Whiting *et al.* (2008, p. 443) go on to conclude that the Concho water snakes have evolved through stochastic environmental fluctuation (such as droughts, floods, and fires) and occur in high densities in riverine habitats, with low extinction risk. This finding is consistent with the conclusion by Forstner *et al.* (2006, p. 19) that the populations of the snake appear to be viable. Whiting *et al.* (2008, p. 442) suggested that low survivorship values (for both juveniles and adults—rates for neonates were not calculated) compared to other similar snakes are being offset by increased reproductive effort with higher clutch sizes (number of young produced) in Concho water snakes than other similar snakes (Greene *et al.* 1999, pp. 706–707). Also see our response to *(1) Comment* above.

(10) Comment: The documented persistence of Concho water snakes during long-term droughts, coupled with the 2008 MOU, which will maintain minimum flow releases, provide a reasonable amount of confidence that the recovery criterion for maintaining adequate flows has been met. Loss of flows no longer poses a significant threat to the Concho water snake.

Our Response: We agree. The minimum flow releases provided by the 2008 MOU, other reservoir releases for water delivery and water quality management, and natural inputs to the rivers from springs and tributary streams, combined with the snakes' ability to withstand stochastic events like droughts, make this threat no longer of sufficient magnitude to warrant the species' listing as threatened.

(11) Comment: The 2008 MOU states that the District can further reduce or even terminate flows during times of extremely low inflow. Given the fairly well documented climate change that is now occurring, which may influence the lengths of drought in the region (and hence the amount of inflow), coupled with the thought that these animals rarely live longer than 5 years, I question whether it is reasonable to leave the MOU so loosely written. Perhaps the Service might choose to be notified after some length of time has passed with no flow occurring so that an assessment can be made as to its effects on the snake populations?

Our Response: The 2008 MOU between the Service and the District does provide the District the ability to forego the minimum flow releases in the event of ''extended hydrological drought and to provide water for health and human safety needs.'' The drought measure is based on reservoir elevation (1,843.5 feet (ft) (561.9 meters (m)) above mean sea level at Spence Reservoir, and 1,504.5 ft (458.5 m) at Ivie Reservoir). These elevations represent the stage when the reservoirs are at about 12 percent of reservoir capacity. These criteria for foregoing minimum flow releases are consistent with the operations included in the 2004 Biological Opinion (Service 2004a, pp. 11–12). Since Spence Reservoir was initially filled in 1971, the water level elevation has only been below this mark during 2002 to 2004, at the end of a prolonged drought extending from 1992 to 2003 (District 2005, pp. 39–43). This reach of the Colorado River below Spence Reservoir makes up about 36 percent of all estimated available habitat within the current range of the Concho water snake (Service 2004a, p. 72). Ivie Reservoir has not been below this mark since it initially filled in 1991. Discharge in the river is well-monitored with gauges maintained by the U.S. Geological Survey (USGS), and flow data (historical and real time) are available on-line. Reservoir stage data are also available on-line on the District's webpage. Therefore, these data can be easily accessed making a notification process unnecessary. Under our post-delisting monitoring plan, we will be using existing stream gauges to monitor instream flows throughout the range of the snake. This information will be used in combination with biological monitoring data to assess the status of the species in the future (see

the Post-Delisting Monitoring Plan section below).

We have revised our discussion of the effects of drought on the Concho water snake and included in the discussion a consideration of future climate change (see section *A. The Present or Threatened Destruction, Modification, or Curtailment of Its Habitat or Range,* Habitat Modification from Reduced Instream Flows, below). Also, see our response to Comment 12 below.

(12) Comment: Drought continues to be a threat because, despite the species' persistence through historic droughts, it now occurs in combination with other stressors, such as reduced availability of riffles, vegetation encroachment, and changing prey base that may compromise survival and population recovery following a drought.

Our Response: We have substantially increased our analysis in this final rule of the potential effects of declining flows due to drought, as well as other threats (see Summary of Factors Affecting the Species). We found none of these potential threats, either acting alone or in combination, have resulted in negative responses by the snake sufficient to justify the species' continued listing as threatened. Forecasting the impacts from future climatic events, such as drought, is difficult to quantify because of the large amount of uncertainty associated with climate modeling, particularly related to precipitation forecasting. However, we revised our discussion of threats related to drought and climate change in this final rule (see section *A. The Present or Threatened Destruction, Modification, or Curtailment of Its Habitat or Range,* Habitat Modification from Reduced Instream Flows below).

We do not foresee future habitat conditions deteriorating to a point where the species is likely to become endangered. Forstner *et al.* (2006, pp. 15–17) and Whiting *et al.* (2008, p. 343) explain that the snake is well adapted to extreme drought conditions. This is demonstrated in the Concho River where the snake continues to persist despite extremely low flow conditions (Dixon 2004, pp. 8–9, Forstner *et al.* 2006, p. 8). The snake has been shown to be more abundant and widespread than originally thought and capable of surviving in reservoirs (District 1998, pp. 18–29). Reservoir operations have provided continual stream flows that have sustained the habitat for the species, even during the prolonged drought extending from 1992 to 2003 (District 2005, pp. 39–43), and we expect minimum reservoir releases to continue. In addition, the snake is equipped to handle stochastic environmental fluctuations, such as low stream flow conditions resulting from drought, and has demonstrated the ability to persist in these less-than-favorable habitat conditions (Forstner *et al.* 2006, p. 17; Whiting *et al.* 2008, p. 443). Also, the threat of vegetation encroachment is no longer considered a significant threat because the snake has shown the ability to maintain populations in river reaches with substantial vegetation encroachment (Dixon 2004, p. 9). Additionally, habitat restoration efforts such as the removal of salt cedar and other brushy species and the creation of artificial instream riffle structures are aimed at improving habitat for the Concho water snake to increase their likelihood of survival during droughts and other stressors. We expect some salt cedar control efforts to continue into the foreseeable future.

(13) Comment: The importance of groundwater-surface water interactions to maintain adequate flows is stressed in the proposed rule. However, there does not appear to be a clear understanding of where groundwater pumpage for consumptive use has influenced base flows. Existing groundwater-surface water interaction models, and even simple gain and loss studies, could provide critical information regarding where the influence of groundwater pumping may influence critical flows and available habitat.

Our Response: We agree this could be important information to consider. We assume there is some influence of local and regional groundwater withdrawals on the availability of water for instream flows. However, we are not aware that such information is currently available or that to quantify this relationship within the range of the Concho water snake is possible at this time.

(14) Comment: Has the occurrence and status of riffle habitat been quantified using GIS or remote imagery in the reaches where the species is known to occur?

Our Response: We are not aware of the availability of this type of information, and the publicly available imagery is not of sufficient resolution to reliably quantify snake habitat in the river. The Service did estimate the quantity and quality of snake habitat by reach in the 2004 Biological Opinion (Service 2004a, Appendix B, pp. 70–72), and we consider it to still be reasonably accurate and the best information available . The information has been added to this final rule (see *A. The Present or Threatened Destruction, Modification, or Curtailment of Its Habitat or Range,* Habitat Quality and Quantity section below). The river reaches in question remain largely undeveloped.

(15) Comment: The suggestion that pool habitats, created by the backwater behind low-head dams, provide refuges for snakes during drought is unsubstantiated. These habitats may represent population sinks, where mortality exceeds recruitment.

Our Response: The suggestion that pools behind low-head dams act as refuge habitats comes from the expert opinion of Dr. James Dixon (Dixon 2004, p. 16). Dr. Dixon is considered a reliable source, as he has studied this species since 1991 (see Werler and Dixon 2000, pp. 209–216).

(16) Comment: The proposed rule indicates that 'an excellent first step' in reversing vegetation encroachment has been accomplished (73 FR 38962). While laudable, a 'first step' should not be construed as success in eliminating vegetation encroachment as a threat.

Our Response: Recent efforts by the District to control salt cedar are conservation actions that we expect will benefit the Concho water snake through maintaining native riparian vegetation and possibly providing additional instream flows. These actions do not completely eliminate vegetation encroachment. However, vegetation encroachment, such as has occurred on the Concho River, is not considered a significant threat since the snake has shown the ability to maintain populations in river reaches with substantial vegetation encroachment (Dixon 2004, p. 9). We have revised the discussion of vegetation encroachment within this final rule (see *A. The Present or Threatened Destruction, Modification, or Curtailment of Its Habitat or Range,* Habitat Modification from Reduced Channel Maintenance Flows section below).

(17) Comment: It seems reasonable to assume that there is likely movement between snake populations with the discovery that the snakes are living in the reservoirs, and, therefore, likely little threat from population fragmentation. Have there been studies of possible gene flow between the populations?

Our Response: We agree that fragmentation has been reduced with the new information on the persistence of the snake in reservoirs. We presume that over time, this allows snakes from the upper Colorado River reach (below Spence Reservoir) to interact with snakes from the Concho River reach by moving through Ivie Reservoir. Previous studies conducted on gene flow suggested that populations of snakes above and below Freese Dam should be more than large enough to maintain

existing genetic variation based on mitochondrial DNA analysis (Sites and Densmore 1991, p. 10). We presume that is still the case. Densmore (1991, pp. 10–11) went on to say that periodic transfer of snakes should probably be implemented to mimic gene flow. More recent analysis has been initiated using modern molecular techniques to evaluate possible gene flow between populations, but data or results from these studies by Dr. Michael Forstner (2008) have not yet been reported. Forstner (2008, p. 14) does suggest that there is no evidence that Freese Dam (Ivie Reservoir) is a barrier to gene flow for either water snake in the Colorado River. However, the report notes that it may have been too short a time to detect such a change (Forstner 2008, pp. 14–15), and we do not know whether there are adequate sample sizes from this study to reliably describe gene flow levels between populations or river reaches; however, the 2008 MOU calls for the movement of snakes to provide some gene flow between river reaches.

(18) Comment: Have any mark and recapture studies been done to demonstrate the movement of snakes between fragmented habitat, e.g., from reservoir to below reservoir and to quantify dispersal of individuals within reservoirs?

Our Response: Some mark-recapture and radio telemetry studies have documented movements in Concho water snakes (Werler and Dixon 2000, p. 212). Although most snakes showed strong site fidelity, some snakes moved as far as 12 mi (19 km). No studies have documented long-range movements between populations or around a large dam. However, the 2008 MOU calls for periodic movement of snakes around the large dams. In addition, the 2008 MOU was amended in 2011 to also include the movement of five snakes from above both dams to below both dams. The 2008 MOU calls for the movement of five snakes from below Spence and Freese dams to above these dams every 3 years. This amount of transfer of snakes should be more than sufficient to maintain gene flow, as studies have shown that as few as one individual exchanged with each generation may be sufficient to maintain adequate gene flow between animal populations (Mills and Allendorf 1996, p. 1,557). Also see the discussion below under Habitat Modification from Fragmentation.

(19) Comment: What is the evidence that fish populations are viable and that cyprinids (minnows) and their habitat (*e.g.,* riffles) are of sufficient quality and quantity in all three reaches? Is the opinion of one or more scientists adequate, or is there sufficient data on the status or trends of fishes in the three reaches to support the assumption that the fish prey base for the Concho water snake is sufficient? Are there data, such as the Texas Commission on Environmental Quality's (TCEQ) Clean Rivers Program data on fishes, which could be analyzed to determine if there are any trends in fish populations worth noting? How are the fish populations that the snakes depend on for food going to fare in situations like prolonged drought?

Our Response: We have revised the discussion of forage fish availability under the section *A. The Present or Threatened Destruction, Modification, or Curtailment of Its Habitat or Range,* Habitat Modification from Reduced Instream Flows below to better explain why we do not find that lack of forage fish is a significant threat to the snake. We are not aware of additional fish data that could inform our decision on the Concho water snake. However, a review of the 10 years of fish surveys by the District from 1987 to 1996 showed that the snakes were opportunistic predators on a variety of fish species (Service 2004a, Appendix A, pp. 68–69). The most abundant fish available and in the snakes' diet are fish species that are adapted to harsh stream conditions (intermittent flow and poor water quality), such as red shiners (*Cyprinella lutrensis*) (Burkhead and Huge 2002, p. 1) and fathead minnows (*Pimephales vigilax*) (Sublette *et al.* 1990, pp. 162–166). Together these two fishes made up two-thirds of the diet of the Concho water snakes. We expect populations of these fish species to persist in harsh environments with intermittent water available (Burkhead and Huge 2002, p. 1; Sublette *et al.* 1990, pp. 162–166). We also expect them to quickly recolonize stream reaches from reservoirs or other refuge habitats after dewatered conditions due to drought have ended. This is based on observations of the snakes being found at sites where they were absent due to lack of water and being found again when the water returns. This occurred in 2004 at Ballinger Lake and Elm Creek (Dixon 2004, pp. 4, 11–12; Forstner *et al.* 2006, p. 15).

(20) Comment: Were nutrient concentrations in water actually evaluated in relation to algal productivity? Is the fish assemblage changing in species composition or relative abundance in response to changing nutrient conditions?

Our Response: The reference to nutrient concentrations and algal productivity was related to past concerns as a possible threat to the Concho water snake during the 1986 listing. We are not aware of data connecting increases in nutrient concentrations to algal productivity or changes in fish species composition or relative abundance within the range of the Concho water snake. There has been no subsequent indication that these threats are actually occurring or are affecting fish communities or snake populations.

(21) Comment: References in reports indicate decreased cooperation by private landowners, indicating stakeholder buy-in is inadequate, raising the possibility that harassment and persecution of snakes now and following delisting is a threat.

Our Response: We have no information that intentional harassment and persecution by landowners or recreationists are likely to affect the species on a rangewide or local population level. The reference (Forstner *et al.* 2006, p. 18) did not indicate decreased cooperation by private landowners, but that new landowners were not easily contacted due to changing ownership. We have revised the discussion to further explain this threat under *Factor B. Overutilization for Commercial, Recreational, Scientific, or Educational Purposes.*

Comments From State Agencies

(22) Comment: The TPWD accepted the District's 1998 arguments to delist the Concho water snake and did so on November 16, 2000. TPWD believes the continuing conservation efforts of the District and other interested parties will ensure the snake's place as a member of the native fauna of Texas for the foreseeable future.

Our Response: We agree with the comment by the TPWD that the Concho water snake no longer qualifies as a threatened species.

(23) Comment: Removing the Concho water snake from protection under the Act will reduce the costs and time associated with section 7 consultations with the U.S. Fish and Wildlife Service. As a result, TxDOT may now delay the letting of some projects until after the final delisting occurs.

Our Response: We understand that removing the species from the Federal list of threatened species will benefit some planned actions by eliminating the requirement for section 7 consultations for actions with a Federal nexus that may affect the Concho water snake.

Comments From the Public

(24) Comment: A comment from the District explained that they conducted field studies on the Concho water snake

from 1987 to 1996 that demonstrated the snake population was much more stable than previously thought. Later field studies in 2003 to 2007 determined the snake was in a recovered state. Additionally, the District agreed to provide stream flow discharge from two of its Colorado River reservoirs (E.V. Spence and O.H. Ivie Reservoirs), which further supports the long-term existence of the snake.

Our Response: The Service recognizes the many years of field studies that the District conducted, and the benefits of the District's partnership with the Service in signing the 2008 MOU to provide reservoir releases for the Concho water snake. The recovery of the Concho water snake and its removal from the list of threatened species are largely due to the efforts of the District to provide reservoir releases to maintain snake habitats over the past 20 years and into the future, and to collect new information documenting the biology, distribution, and abundance of the snake.

(25) Comment: The proposed delisting fails to make a convincing case that recovery of the Concho water snake is sufficient to justify its removal from threatened species protections. The proposal's arguments are vague, circular, repetitive, and sometimes contradictory. There is little supporting data or science provided. The delisting is premature and unsupported.

Our Response: We disagree with the commenter's conclusions. We have updated and clarified the text in this final rule in response to this and other comments received to better explain our analysis and conclusions. Specifically, we revised the discussion and analysis under section *A. The Present or Threatened Destruction, Modification, or Curtailment of Its Habitat or Range.* The Service believes the removal of the snake is warranted based on the best available scientific information.

(26) Comment: The proposed rule fails to adequately address availability of, and threats to, the important riffle habitats of the Concho water snake. For example, reservoir habitats used by the snake must be equal to or greater than the amount of riverine riffle habitats lost due to effects of the reservoir construction at O.H. Ivie Reservoir. The range extension for the snake does not include information on the amount and quality of habitat and its use by snakes. There is no estimate provided of past or future loss of riffle habitat, or an assessment of the long-term success of the artificial riffles, to support that riffle habitat loss is not still a threat to the Concho water snake.

Our Response: We recognize that there has been, and will continue to be, changes in the characteristics of the riverine habitat within the range of the Concho water snake as a result of past and ongoing human activities. While there have not been any recent studies to quantify these changes, the best available data indicate that any possible loss of riffle habitat is not resulting in impacts that would likely cause the snake to become endangered. The best example is observed in the Concho River where the long-term substantial decline in minimum stream flows and the loss of flushing flood flows have reduced natural riffle habitats available (Dixon 2004, pp. 8–9). However, Concho water snakes continue to persist in relatively high numbers in this reach. For example, 20 of the 45 Concho water snakes observed or captured by Forstner *et al.* (2006, p. 8) were from the Concho River. In addition, the snake's use of other habitats, including reservoir shorelines, lessens the overall effect of decreased riffle habitat availability. We have revised our discussion in this final rule and provided a quantified estimate of habitat availability by reach throughout the range of the species (see section *A. The Present or Threatened Destruction, Modification, or Curtailment of Its Habitat or Range,* Habitat Quality and Quantity below).

(27) Comment: The proposed rule fails to address the size and health of reservoir populations. Whiting *et al.* (2008) notes that the species occurs in relatively low densities in reservoirs, and they believe the snake may be more vulnerable to extinction in reservoirs. It appears unlikely that the use of reservoir habitats by Concho water snakes provides sufficient improvement in species status to support removal of threatened protection.

Our Response: The ability of Concho water snakes to survive and reproduce in reservoirs is one factor among many we considered in determining that the species is no longer threatened. There is some evidence that snake populations in the reservoirs are not as robust as those in their native riverine habitats. We would expect this given that the snake habitat in reservoirs is likely of a somewhat lower quality and in less abundance compared to natural riverine habitats. This is because the reservoirs may have less shallow flowing water over rocky substrates that support small fish that are the prey base for the snake. However, Whiting *et al.* (2008, p. 443) concluded that data are not sufficient for truly reliable estimates of snake survival and population growth in either of the two main reservoirs. Although the authors aimed to compare populations in reservoirs with those in rivers, data did not allow that analysis due to the inability to sufficiently quantify immigration rates (Whiting *et al.* 2008, p. 443). The statement by Whiting *et al.* (2008, p. 443) that Concho water snakes may be more vulnerable to local extinction in lakes was in the context that the extinction risk in natural river habitats is relatively low due to the snake's occurrence in high densities and their ability to grow fast and mature early. The ability of the species to utilize reservoirs is a positive discovery and supports the conclusion that the impacts of the reservoirs were not as great as initially predicted. Also, see our response to *(1) Comment* above.

(28) Comment: The proposed rule indicated that confirming that a species has persisted over time and continues to demonstrate reproductive success is sufficient to assume that populations are viable. Persistence and reproduction are not adequate to demonstrate population viability. The statement that the populations are ''seemingly viable'' is a tentative conclusion that is scientifically and legally unsupportable.

Our Response: Our explanation of population viability may have oversimplified the explanation by Forstner *et al.* (2006, p. 20) describing the status of Concho water snake populations. We understand that documenting persistence and reproduction is not adequate to precisely determine viability in most quantitative ecological contexts. In response to this comment, we have updated our explanation to describe that there are not adequate data for quantitative modeling for population viability analysis of this species (see *Application of the Recovery Plan's Criteria* section below). We have revised this discussion in the final rule to instead refer to the definition of viable population given in the recovery plan. The recovery plan defines viable population as one that is self-sustaining, can persist for the long-term (typically hundreds of years), and can maintain its vigor and its potential for evolutionary adaptation (Service 1993, p. 33). We have also included a more detailed summary of the results of the 10 years of snake monitoring, which concluded in 1996. These extensive data, in conjunction with updated limited survey data in 2004 and 2005, are the basis for determining that populations of Concho water snake are viable. In addition, it is important to recognize the standard under the Act is to determine if the species is likely to become endangered in the foreseeable future. Given the best available information, weighing the status of the species and

the current and future threats, we have concluded that the snake is no longer likely to become endangered in the foreseeable future throughout all or a significant portion of its range.

(29) Comment: The discussion in the proposed rule regarding effects of drought is poorly articulated and circular. The stated belief that the Concho water snake and its fish prey base can and will survive any level and duration of drought is unsupported by data or analysis in the proposal.

Our Response: We did not intend to imply that snakes can survive any level of drought, but we believe they can survive the expected drought conditions in the foreseeable future, based on historical records and considerations over the last thousand years based on tree-ring analysis (summarized in Forstner *et al.* 2006, p. 16). We are relying on the expert opinion and field experience of long-term herpetologists, explained in Forstner *et al.* (2006, pp. 15–17) and Whiting *et al.* (2008, p. 443) that the Concho water snake has evolved in a drought-prone, hydrologically dynamic system and has demonstrated the ability to withstand stochastic environmental fluctuations. This characteristic of the snake to endure periods of drought and resulting poor habitat conditions was documented for the Concho River reach and at Lake Ballinger on Elm Creek, a Colorado River tributary (Dixon 2004, pp. 9, 11–12; Forstner *et al.* 2006, p. 17; Whiting *et al.* 2008, p. 443). Due to water management and climate change, future droughts could be more severe than the historical record over the last 100 years. However, we cannot foresee that these conditions are likely to be so severe as to result in the extinction or endangerment of the snake. To make this explanation clearer, we have rewritten the discussion in this final rule (see section *A. The Present or Threatened Destruction, Modification, or Curtailment of Its Habitat or Range,* Habitat Modification from Reduced Instream Flows below).

(30) Comment: The success in abatement of threats over the 22 years since the Concho water snake was listed appears to be overstated in the proposed rule. Long-term success of artificial riffle construction to increase riverine habitat is not yet determinable. The 15 or so years since artificial riffle installation are not long-term in a hydrologic sense. It is my understanding the artificial riffles have not been assessed for several years.

Our Response: The artificial riffles constructed in 1989 produced immediate results as snakes were found there by 1991 (District 1998, pp. 13, 15). The six riffles were monitored from their creation in 1991 through 1996, and snakes were consistently found at five of the six sites (Thornton 1996, pp. 44–49). The success of the snakes in the reservoirs and in the artificial riffles resulted in less attention being given to the need to mitigate further for the habitat loss from reservoir construction. We are not aware of any recent monitoring efforts focused on the artificial riffles, but we have no reason to believe the snakes are not continuing to persist there.

(31) Comment: Other than species persistence, data and studies upon which the 2004 reduction of minimum instream flows was based are not discussed. There are also no studies documenting the results of the reductions in the required flow.

Our Response: A full explanation and analysis of effects of the 2004 reduction in required flows is documented in the Service's biological opinion provided to the U.S. Army Corps of Engineers as a conclusion to the formal section 7 interagency consultation for the change in reservoir operations (Service 2004a, pp. 1–76). The analysis included updated biological information that the snakes use more diverse riverine habitats (such as pools, in addition to riffles) and were found in the reservoirs and tributaries (Dixon 2004, pp. 9, 16; Service 2004, pp. 53–54). As a result of that consultation, we gave our biological opinion that the reduced reservoir releases described in the proposed agency action were not likely to jeopardize the continued existence of the Concho water snake and were not likely to destroy or adversely modify designated critical habitat. These same flow rates were used in the 2008 MOU. In making the delisting proposal and now the final rule, we relied heavily on the results of monitoring by Forstner *et al.* (2006, p. 1–22) in concluding that the reduced flow rates are sufficient for the snake.

(32) Comment: The 2004 Biological Opinion substantially changed the 1986 requirement for high discharge channel maintenance flows below O.H. Ivie Reservoir. That change is not discussed in the proposed rule, and would be of particular importance in understanding the basis for the habitat loss downstream of reservoirs.

Our Response: We have added information to the final rule explaining the changes in requirements for channel maintenance flows (see section *A. The Present or Threatened Destruction, Modification, or Curtailment of Its Habitat or Range,* Habitat Modification from Reduced Channel Maintenance Flows below). The 2004 Biological Opinion and the 2008 MOU both recognize the benefits of periodic high discharges from either reservoir releases or flood runoff events to function in river channel maintenance to maintain suitable rock substrates and abate vegetation invasion of riffle habitat. Our analysis concludes that some flushing flows are likely to naturally occur, slowing the degradation of aquatic habitats. In addition, the snakes appear capable of sustaining populations in areas where instream habitats have been altered due, in part, to reducing flushing flows. In some areas, such as on the Concho River, the dominant substrate is solid bedrock and not as subject to invasion of vegetation. Cracks and breaks in the bedrock provide foraging habitat similar to riffles. Therefore, we did not find that the threats of reduced flushing flows are significant.

(33) Comment: Although the proposed rule says that the District has implemented every activity requested by the Service in previous biological opinions, the District's compliance was largely due to removal of requirements that they objected to prior to finalizing the opinion and removal of others by later amendments. The statement that the District has an excellent track record of carrying out conservation actions should be supported by information.

Our Response: The 1986 Biological Opinion was amended many times up until the major revision in 2004 due to changing conditions based on new information being collected (Service 2004a, pp. 1–3). A discussion of the District's compliance efforts under the previous biological opinions is documented in the 2004 revised biological opinion (Service 2004a, pp. 42–47). We have also added information throughout this final rule to document important areas where the District has fulfilled its requirements.

(34) Comment: There is no evidence provided that the instream flow requirements from the 2004 Biological Opinion and 2008 MOU are sufficient to ensure long-term species survival.

Our Response: We believe the flows provided in the 2008 MOU are sufficient to ensure long-term species survival. This is based on the information demonstrating that the species can survive under substantially lower flows compared to what was previously thought. These conclusions are based on the observations and reports of species experts (Dixon 2004, p. 16; Forstner *et al.* 2006, pp. 19–21; Whiting *et al.* 2008, p. 443). We have also revised the discussion of the threats from reduced instream flows in this final rule to include additional information and discussion on hydrology, climate

change, and the potential response by the snake (see section *A. The Present or Threatened Destruction, Modification, or Curtailment of Its Habitat or Range,* Habitat Modification from Reduced Instream Flows below).

(35) Comment: The 2008 MOU was entered in good faith, but it is not legally enforceable. There is no consequence to the District for a lapse in conservation actions. The MOU is not an adequate substitute for legal protection under the Act.

Our Response: We do not consider the 2008 MOU (including the 2011 amendment) as a substitute for the legal protections under the Act. It does document the commitment that the District will continue to cooperate in maintaining instream flows downstream of the two Colorado River reservoirs. These flows are in addition to other reservoir releases for water delivery and water quality management, and natural inputs to the rivers from springs and tributary streams. Given the District's track record of compliance and completing conservation actions, we have no reason to doubt that the District will continue to carry out the actions agreed to in the 2008 MOU (including the 2011 amendment). In addition, Section 5.2 of the MOU notes the Service's ability to list the snake again under protection of the Act. This provision includes use of emergency listing procedures if warranted.

(36) Comment: Initiation of salt cedar control does nothing to guarantee threat abatement to Concho water snake habitat. Salt cedar control has a long history of variable and generally quite limited success. It will be many years before it can be determined if the recently initiated project will provide any benefit to the snake.

Our Response: Salt cedar control is one conservation action that can provide benefits to the Concho water snake through restoration of native riparian vegetation to provide natural stream-side habitat conditions and potential water savings for instream flow increases. We agree with the comment that it will take time to document the actual benefits to the snake.

(37) Comment: The proposal acknowledges that delisting recovery criteria from the recovery plan have not been met, but claims additional information has rendered those criteria partially invalid. This undermines the recovery planning process and is offensive to the many stakeholders who participate in recovery plan development. If the recovery plan is out-of-date or otherwise invalid, the Service should convene the recovery team and amend or rewrite the plan with appropriate public and stakeholder review. This will yield a firmer basis and greater support than the current process for delisting.

Our Response: The Service believes that the Concho water snake has recovered and generally met the criteria from the 1993 recovery plan. Although meeting the recovery criteria is not necessarily required for delisting, we have discussed the criteria below in this final rule section *Application of the Recovery Plan's Criteria.* The Service does not believe it is necessary to revise the recovery plan for the Concho water snake. We have found the current information is sufficient to support that the species no longer qualifies as a threatened species. Therefore, additional time and resources would not be well spent to revise the recovery plan. Also we have sought the input of the public, stakeholders, and experts, including former recovery team members, during the comment period for the proposal to remove the snake from the threatened list.

(38) Comment: While District water rights may ensure water deliveries to downstream users, they do not ensure that deliveries will occur through the natural streambed where Concho water snake exists. Such rights can be fulfilled through other means, like canals, water trades, storage, etc., that result in dewatered stream channels.

Our Response: The primary water releases for downstream water users that provide benefits to the snake occur from the required minimum flow releases from Ivie Reservoir for the Lower Colorado River Authority (LCRA). These releases are required by the District's State water right permit for Ivie Reservoir. The deliveries are made using the natural channel. Other deliveries made for water quality improvement occur between Spence and Ivie Reservoirs and also use the natural channel. We have no reason to believe that these water deliveries would not use the natural stream channel in the future. The District already uses a sophisticated system of pipelines to deliver most of their water to its customers, the majority of whom are cities upstream of the two reservoirs (District 2005, pp. 2–5). Therefore, we do not foresee the District using any other methods than the natural channel to deliver water downstream.

(39) Comment: The Service statement that the snakes may not need to be transferred between populations to prevent genetic isolation illustrates the prematurity of this proposed rule. A delisting decision should be based on something more reliable than that the species ''may not need'' this conservation action.

Our Response: We have clarified this language in this final rule (see *Application of the Recovery Plan's Criteria* section below). Section 4.1 of the 2008 MOU, as amended in 2011, states that, ''In the springtime once every 3 years, the District, in coordination with the Service, should move five male snakes (each) from below Spence and below Freese [Ivie Reservoir] dams to above these dams, and move 5 different male snakes from above both dams to below both dams. Moving snakes will be dependent upon availability of funding for the District.'' This requirement was included in the 2004 Biological Opinion (Service 2004a, p. 61). Should funding be unavailable in any particular snake-moving year, every effort will be made to move snakes in the succeeding year. Previously, movement of snakes was suggested with the Concho River population as well (Service 1986, p. 24). However, because the snakes exist in Ivie Reservoir they have access from the Colorado River to the Concho River so transferring snakes to the Concho River was determined not necessary.

(40) Comment: The reference to the uncertainties in the results from Whiting *et al.* (2008) should be clarified that the uncertainties resulted from the data being insufficient to estimate survival and trend reliably due primarily to insufficient sampling at any single study site, along with a host of variables, especially environmental variability within a site and among sites, and also because dispersal rates were not measured among sites. Therefore, study results have not been robust enough to allow either population or trend estimates with satisfactory precision.

Our Response: We have updated the text in the final rule to be consistent with this comment (see *Application of the Recovery Plan's Criteria* section below).

(41) Comment: A reliable trend estimate for the Concho water snake over a span of years seems to be lacking for the species, and there are no reasons given for why this was so. A trend analysis would be better to ascertain if the species should be delisted.

Our Response: We agree that a reliable trend analysis over time would be useful in confirming the status of the species. Despite many years of monitoring surveys over time, no reliable trend analysis has been completed due to variations in study efforts and methods and to environmental conditions (District 1998, p. 18; Service 2004a, p. 23; Forstner *et*

al. 2006, p. 12–13; Whiting *et al.* 2008, p. 343). However, the best available information on the population status of the snake from the large numbers of snakes captured during the 10 years of monitoring (District 1998, p. 21) and confirmed in 2005 (Forstner *et al.* 2005, pp. 19–20) demonstrates that its status is sufficiently good to warrant removal from the list of threatened species. For more discussion on this issue, see *Application of the Recovery Plan's Criteria,* Viable Populatins section of this rule.

Summary of Factors Affecting the Species

Section 4 of the Act and its implementing regulations (50 CFR part 424) set forth the procedures for listing, reclassifying, or removing species from listed status. ''Species'' is defined by the Act as including any species or subspecies of fish or wildlife or plants, and any distinct vertebrate population segment of fish or wildlife that interbreeds when mature (16 U.S.C. 1532(16)). Once the ''species'' is determined, we then evaluate whether that species may be endangered or threatened because of one or more of the five factors described in section 4(a)(1) of the Act. We must consider these same five factors in delisting a species. We may delist a species according to 50 CFR 424.11(d) if the best available scientific and commercial data indicate that the species is neither endangered nor threatened for one of the following reasons: (1) The species is extinct; (2) the species has recovered and is no longer endangered or threatened (as is the case with the Concho water snake); and/or (3) the original scientific data used at the time the species was classified were in error.

A recovered species is one that no longer meets the Act's definition of threatened or endangered. The analysis for a delisting due to recovery must be based on the five factors outlined in section 4(a)(1) of the Act. This analysis must include an evaluation of threats that existed at the time of listing, those that currently exist, and those that could potentially affect the species once the protections of the Act are removed.

The Act defines ''endangered species'' as any species which is in danger of extinction throughout all or a significant portion of its range, and ''threatened species'' as any species that is likely to become an endangered species within the foreseeable future throughout all or a significant portion of its range. The word ''range'' in the phrase ''significant portion of its range'' refers to the range in which the species currently exists. For the purposes of this analysis, we will evaluate whether the currently listed species, the Concho water snake, should be considered threatened or endangered throughout all of its range. Then we will consider whether there are any significant portions of the Concho water snake's range in which it is in danger of extinction or likely to become endangered within the foreseeable future (see Significant Portion of the Range Analysis section below). For the purposes of this finding, the ''foreseeable future'' is the period of time over which events or effects reasonably can be anticipated, or trends reasonably extrapolated, such that reliable predictions can be made concerning the status of the species. We considered this temporal component in the analysis in each substantive discussion under the five factors below and provide a discussion of the foreseeable future in the Conclusion of the Five-Factor Analysis section below.

Section 4(a)(1) of the Act requires that we determine whether a species is endangered or threatened based on one or more of the five following factors: (A) The present or threatened destruction, modification, or curtailment of its habitat or range; (B) overutilization for commercial, recreational, scientific, or educational purposes; (C) disease or predation; (D) the inadequacy of existing regulatory mechanisms; and (E) other natural or manmade factors affecting its continued existence. Our evaluation of these five factors is presented below. Following this threats analysis, we evaluate whether the Concho water snake is threatened or endangered within any significant portion of its range.

A. The Present or Threatened Destruction, Modification, or Curtailment of Its Habitat or Range

Habitat Description

Concho water snakes are known to occur in rivers, streams, and along the shoreline of reservoirs. These snakes are air-breathing; however, they feed almost exclusively on fish and are, therefore, found only near water sources capable of supporting at least a minimal fish population. Unlike many other species of *Nerodia,* Concho water snakes do not seem to move far from water (Werler and Dixon 2000, p. 208). During Greene's (1993, p. 96) visual and radio telemetry surveys, all snakes occurred within 33 ft (10 m) of water.

Stream and river habitat used by the Concho water snake is primarily associated with riffles (Greene 1993, p. 96; Werler and Dixon 2000, p. 210; Forstner *et al.* 2006, p. 13) where the water is usually shallow and the current is of greater velocity than in the connecting pools. Riffles begin when an upper pool overflows at a small change in gradient and forms rapids. The stream flows over rock rubble or solid to terraced bedrock substrate through a chute channel that is usually narrower than the streambed. The riffle can extend to over 300 feet (100 m) in some locations and ends when the rapids enter the next downstream pool. Riffles are believed to be the favored habitat for foraging, with young snakes using shallow parts of riffles and adult snakes using deeper parts of riffles (Williams 1969, p. 8; Scott *et al.* 1989, pp. 380–381; Greene 1993, pp. 13, 96; Werler and Dixon 2000, p. 215; Forstner *et al.* 2006, p. 13). Juvenile snakes are closely associated with gravel shallows or riffles (Scott and Fitzgerald 1985, p. 35; Rose 1989, pp. 121–122; Scott *et al.* 1989, p. 379). This habitat is likely the best for juvenile snakes to successfully prey on small fish because the rocky shallows concentrate prey and are inaccessible to large predatory fish. The exposed rocky shoals act as thermal sinks, which maintain heat and may help keep the juvenile snakes warm and maintain a high growth rate (Scott *et al.* 1989, pp. 380–381).

Observations on the Concho and Colorado Rivers also indicated Concho water snakes were found in the shallow pools between riffles (Williams 1969, p. 8; Dixon 2004, p. 16). Dixon *et al.* (1989, p. 16) demonstrated that adult snakes used a variety of cover sites for resting, including exposed bedrock, thick herbaceous vegetation, debris piles, and crayfish burrows. Adult and maturing Concho water snakes use a wider range of habitats than do juveniles including pools with deeper, slower water (Williams 1969, p. 8; Scott *et al.* 1989, pp. 379–381; Werler and Dixon 2000, p. 211).

Range

Historically the Concho water snake was known to occur in spotty distribution in central Texas on the Colorado River below E.V. Spence Reservoir (constructed in 1969) near the City of Robert Lee, Texas, downstream to the F.M. 45 highway bridge crossing and then not again until further downstream near the City of Bend, Texas (Tinkle and Conant 1961, pp. 42–43; Williams 1969, p. 3). On the Concho River and its tributaries, Concho water snakes were historically known from Spring Creek, Dove Creek, and the South Concho River, all upstream of the Twin Buttes and O.C. Fisher Reservoirs near San Angelo, Texas, and in the Concho River downstream from San Angelo to the confluence with the

Colorado River (Marr 1944, pp. 486–487; Tinkle and Conant 1961, pp. 42–43). Prior to the Federal listing of the Concho water snake in 1986, it had been extirpated from Concho River tributaries upstream of the City of San Angelo (Flury and Maxwell 1981, p. 31), and surveys had not located snakes in lakes or reservoirs (Scott and Fitzgerald 1985, pp. 17, 34). At the time of listing, the range of the snake had been affected by O.C. Fisher, Twin Buttes, and Spence Reservoirs and one tributary creek reservoir, Ballinger Municipal Lake (on Elm Creek). A fifth reservoir, O.H. Ivie Reservoir (formerly known as Stacy), was planned for construction at the confluence of the Concho and Colorado Rivers and was expected to reduce the snake's range by more than 50 percent (Scott and Fitzgerald 1985, pp. 31, 35).

At the time of listing in 1986 the range was described as approximately 199 mi (320 km) (51 FR 31412). By 1993, Scott *et al.* (1989, pp. 382, 384), Thornton (1992, pp. 3–16), and Whiting (1993, pp. 8, 28, 117–118, 121) had found additional locations of the snake upstream and downstream and determined the Concho water snake's distribution to be approximately 233 mi (375 km) of river (Service 1993, p. 9). While the Concho water snake has been extirpated from some reaches of its historical distribution, mainly upstream of San Angelo (Flury and Maxwell 1981, p. 31), since the time of listing it has been confirmed farther downstream from Ivie Reservoir and farther upstream from Spence Reservoir (District 1998, pp. 10, 22, 26, Dixon *et al.* 1988, p. 12; 1990, pp. 50, 62–65; 1991, pp. 60–67; 1992, pp. 84, 87, 96–97; Scott *et al.* 1989, p. 384). Analysis for the 2004 revision to the 1986 Biological Opinion (BO; Service 2004a, p. 32) summarized the current known distribution of the Concho water snake as being the Colorado River from the confluence of Beals Creek (upstream of Spence Reservoir), depending on reservoir stage, to downstream of Ivie Reservoir (constructed in 1989) to Colorado Bend State Park, and on the Concho River downstream of the City of San Angelo to the confluence with the Colorado River. This is a total of about 280 mi (451 km) of river and about 40 mi (64 km) of reservoir shoreline.

The information on the current range of the snake is based largely on the monitoring studies performed by the District between 1987 and 1996 (District 1998, p.10). In addition to monitoring 3 times a year at 15 riverine sites, the District also conducted searches throughout the upper Colorado River and Concho River basins. Additional surveys taught researches that late summer and early fall were the times when the snake was most active and that snakes can often be captured in minnow traps when they are not found with searches (District 1998, pp. 16, 18). The results confirmed a larger distribution than was thought at the time of listing. For example, the snake was believed to be extirpated from the area downstream of Spence Reservoir in the Colorado River, but was found to occur there with more intensive sample efforts (District 1998, p. 22). The snake overall was found throughout its historic range, with the only exception being the small tributary streams upstream of San Angelo, where only a few snakes had been collected in the past.

To confirm the distribution of the species, Concho water snake surveys were conducted across the species' range in 2004 and 2005 (Dixon 2004; Forstner *et al.* 2006). One goal of Forstner *et al.* (2006, pp. 4–5) was to evaluate whether viable Concho water snake populations existed in all reaches of the Colorado and Concho Rivers. To do this, snake localities were surveyed ''for evidence of reproduction (one measure of sustainability).'' In all, 14 sites were sampled, and 45 Concho water snakes were collected from 11 of those sites (Forstner *et al.* 2006, pp. 9–12). Sample efforts were limited to the extent necessary to document the presence of the species and evidence of reproduction in each reach, based on the capture of either neonate snakes or post-partum females. The collection efforts were brief, and more effort would have likely increased the total number of snakes collected (Forstner *et al.* 2006, p. 11).

Persistence and reproduction were documented in the Concho River and upstream of Ivie Reservoir in the Colorado River, as well as in both Spence and Ivie Reservoirs (Forstner *et al.* 2006, pp. 12, 18). However, access downstream of Ivie Reservoir was limited by inability to contact private property owners, preventing a thorough assessment downstream of that impoundment (Dixon 2004, p. 2; Forstner *et al.* 2006, p. 18). Despite limited access downstream of Ivie Reservoir, four snakes were captured during the surveys at two sites and at least one female exhibited signs of recently giving birth. Forstner *et al.* (2006, p. 18) described these results as technically sufficient to demonstrate persistence and reproduction downstream of Ivie Reservoir 15 years after its construction. These authors conclude that, ''Even in the face of landscape scale or ecosystem wide stresses by severely reduced precipitation, increased human uses of instream flows, introduced species, and ever increasing human densities, the Concho water snake remains in the majority of the sites visited and continues to reproduce at those locations'' (Forstner *et al.* 2006, p. 18). Forstner *et al.* (2006, p. 20) state that ''self sustain[ing], seemingly viable populations in the Concho and Colorado rivers at the end of a decade of monitoring'' occur in the three reaches of the snake's range. We find that the range of the species has not declined since it was listed in 1986 and has been found to be larger, about 80 more river-mi (129 river-km), than at the time of listing. Therefore, because of its continued persistence throughout its range, the species is not threatened with endangerment due to range reduction.

Population Trends

Following listing of the Concho water snake in 1986, a 10-year monitoring study began throughout the snake's range, including several reservoirs and tributaries (District 1998, pp. 10, 22, 26). The study included mark-recapture techniques by inserting a unique tag in each captured snake of sufficient size so that individuals could be identified when they were recaptured. Over the 10 years of study, 9,069 unique Concho water snakes were captured (District 1998, p. 21). Of this total, 1,535 (17 percent) were captured in reservoirs, 1,517 (17 percent) were captured in the Concho River reach, 5,586 (62 percent) were captured in the Colorado River reach, and another 415 (5 percent) were captured in tributary streams. All of the more than 20 study sites monitored had multiple captures of snakes every year, with a variety of age classes (Thornton 1996, pp. 26–50). Sampling effort at each survey site was not quantified, and was highly variable. Therefore, an increase or decrease in numbers of snakes at a site or cluster of sites in a river reach over the 10 years of the survey does not necessarily indicate an actual increase or decrease in snakes because the effort made to find them varied from survey to survey. The high variation in sample efforts and environmental conditions prevented a thorough analysis of population trends over time or calculation of total population estimates (District 1998, p. 18).

Forstner *et al.* (2006, pp. 6–8, 18, 20) updated the past information by conducting brief field surveys in 2004 and 2005 to verify that snakes continued to be present and were reproducing in each river reach and reservoir where it had been documented in previous studies. This study, which incorporated

the results by Dixon (2004), confirmed reproducing populations of Concho water snakes in each river reach and in both Ivie and Spence Reservoirs (Forstner *et al.* 2006, p. 12). Based on the snakes' persistence and reproduction throughout its range over the past 20 years, Forstner *et al.* (2006, pp. 18, 20) concluded that viable populations of Concho water snakes could be presumed to exist in all three reaches of the species' range.

Only two sample locations (below Freese Dam and at River Bend Ranch, about 25 miles (40 km) downstream of the dam) were available for access by the updated study in the reach of the Colorado River downstream of Freese Dam (Ivie Reservoir) (Dixon 2004, pp. 8, 14). This was due to the difficulties in establishing contact with private landowners in this area. However, Dixon did collect three snakes from these two sites in 2004, and one was a juvenile female (Dixon 2004, pp. 16–17). In 2005, Forstner *et al.* (2006, pp. 12, 18) collected one post-partum female below Freese Dam indicating the snake had given birth to young and confirming reproduction. Although only four snakes were captured in limited sampling efforts in 2004 and 2005 in this reach, data from the District's earlier monitoring showed large numbers of snakes in this reach (District 1998, pp. 34–38, 50). We have no reason to conclude that the snake population downstream of Freese Dam is of additional concern.

The 10 years of Concho water snake monitoring data (1987 to 1996) was reanalyzed in an attempt to evaluate population trends and quantify long-term viability (Whiting *et al.* 2008, pp. 438–439). The results, however, were inconclusive because the data were insufficient to reliably estimate survival and emigration. This was due primarily to insufficient sampling at any single study site to quantify dispersal rates, along with a host of other variables, especially different environmental conditions within a site and among sites (Whiting *et al.* 2008, p. 443). This resulted in the survival rates from the capture-recapture study being biased low and producing low estimates of annual survival with large standard errors (Whiting *et al.* 2008, p. 443). The study stated that snakes continued to persist even in drought-prone areas, some with almost total water loss, with hydrologically dynamic systems (Whiting *et al.* 2008, pp. 442–443).

In conclusion, although recent data on population trends are sparse, data showing a stable range, long-term persistence, and continuing breeding success indicate that populations have persisted and remain distributed throughout the species' range over time and do not indicate population concerns.

Habitat Quality and Quantity

At the time of listing, we believed the Concho water snakes did not exist in reservoir habitats. In fact, at the time of listing, the imminent construction of Ivie Reservoir was considered a primary threat because of the assumed habitat loss that would occur due to the reservoir. However, the magnitude of this threat did not materialize because subsequent research confirmed that Concho water snakes inhabit shallow water with minimal wave action and rocks along reservoir shorelines (Scott *et al.* 1989, pp. 379–380; Whiting 1993, p. 112). Juvenile Concho water snakes are generally found in low-gradient, loose-rock shoals adjacent to silt-free cobble. However, Concho water snakes have also been observed on steep shorelines (Whiting 1993, p. 112) and around the foundations of boat houses (Scott *et al.* 1989, p. 379).

We quantified the amount and quality of potential Concho water snake habitat and compared it by river reach and reservoir (Service 2004a, Appendix B, pp. 70–72). These data were habitat quality estimates provided by District biologist and species expert, Mr. Okla Thornton, and were digitized and summarized by the Service using a Geographic Information System. We categorized the habitat quality as high, medium, or low, and calculated the quantity of habitat based on linear meters of river bank or shoreline and summed the results by river reach and reservoir. The results were presented by five segments: (1) The Concho River segment (San Angelo to the inflow of Ivie Reservoir); (2) the Spence Reservoir segment (shoreline of the lake); (3) the upper Colorado River segment (outflow of Spence Reservoir downstream to the inflow of Ivie Reservoir) segment; (4) the Ivie Reservoir (shoreline of the lake); and (5) the lower Colorado River segment (outflow of Ivie Reservoir downstream to Colorado Bend State Park).

In total, the analysis showed over 112 mi (180 km) of snake habitat is generally available along the rivers and in the reservoirs within the species' range. The results indicated that 82 percent of overall available habitat is found in the three river reaches and 18 percent of available snake habitat is in the two reservoirs. The largest percent of ''high quality'' habitat (total of 59 mi (96 km)) was found in the upper and lower Colorado River segments (42 percent and 27 percent, respectively) (Service 2004a, p. 71). The two reservoirs combined contain 15 percent of available ''high quality'' habitats and the Concho River segment contained 16 percent (Service 2004a, p. 71). These data demonstrate that Concho water snake habitat is distributed throughout its range in both the riverine and reservoir segments.

Habitat Destruction From Reservoir Inundation

At the time we listed the Concho water snake in 1986, we believed the construction of Ivie Reservoir would result in the loss of Concho water snake habitat upstream of the dam by inundating the natural riverine rocky and riffle habitats. The site of the proposed reservoir on the Colorado River was believed to support the highest concentration of Concho water snakes (Flurry and Maxwell 1981, pp. 36, 48; 51 FR 31419). Outside of this area, the snake had been found only in isolated occurrences, which indicated an already disjunct, fragmented distribution. The snake had not been found in reservoirs or in the silted-in riverine habitat below Spence Reservoir (Scott and Fitzgerald 1985, pp. 13, 28). It also had not been found in perennial tributaries except Elm Creek near Ballinger (Scott and Fitzgerald 1985, pp. 15, 34). Thus, in 1986 we believed the inundation by Ivie Reservoir would result in a substantial loss of habitat (as much as 50 percent) for the Concho water snake by eliminating them from a substantial portion of their range.

As a result of a 1986 formal consultation conducted under section 7 of the Act with the U.S. Army Corps of Engineers on construction of Freese Dam to form Ivie Reservoir (1986 BO), the District agreed to implement a number of conservation measures under required reasonable and prudent alternatives to avoid jeopardizing the snake. These measures included, but were not limited to: Long-term monitoring of the snakes, completing life-history studies, maintaining specific flow regimes from Spence and Ivie Reservoirs, creating six artificial riffles below Spence Reservoir, and transplanting snakes between populations above and below Ivie Reservoir (Service 1986, pp. 12–24). Ivie Reservoir was constructed in 1989 and the District carried out the required measures over the following 10 years (District 1998, p. 29; Service 2004a, pp. 42–47).

As part of their long-term monitoring plan, District field biologists conducted extensive searches for the Concho water snake beginning in 1987. According to Dixon *et al.* (1988, p. 12; 1990, pp. 50,

62–65; 1991, pp. 60–67; 1992, pp. 84, 87, 96–97), snakes were documented within and above Spence Reservoir, downstream of Spence Reservoir in the artificial riffles, at Ballinger Municipal Lake, the old Ballinger Lake, and the connecting channel between the two Ballinger lakes. The snake was also documented in multiple locations on Elm Creek and two of its tributaries, Bluff Creek and Coyote Creek (Scott and Fitzgerald 1985, pp.14–15, 30; and Scott *et al.* 1989, p. 384). Snakes were regularly found in Spence, Ivie, and Lake Ballinger Reservoirs, a habitat type they were not known to occupy at the time of listing. Concho water snakes have continued to be found in reservoirs. Dixon's (2004, pp. 3–4) surveys in 2004 confirmed that snakes persist in Spence and Ivie Reservoirs. In 2004, Ballinger Lake had only a small pool of water remaining, and no snakes were found there at that time. However, after rains in 2005, Forstner *et al.* (2006, p. 12) confirmed snakes were again present and reproducing within Lake Ballinger. These observations confirm that Concho water snakes have adapted to using reservoirs as habitat.

Studies have found that rocky shorelines were the single most important component of snake habitat in reservoirs, and that changes in water surface elevation of Spence Reservoir will affect the availability of that shoreline habitat (Whiting 1993, p. 13; Whiting *et al.* 1997, pp. 333–334). Although Forstner *et al.* (2006, p. 17) refer to the lakes overall as ''very poor Concho water snake habitat,'' while Dixon (2004, p. 14) calls them ''prime habitat,'' both reports conclude that there are rocky outcrops and boulder slopes in limited areas within the reservoirs that are occupied by the snake. The snakes have remained in Spence Reservoir for nearly 40 years following its construction and for at least 15 years following construction of Ivie Reservoir. Because Concho water snakes are now known to be reproducing and persisting over time in reservoirs and their current distribution is larger than reported historically and at the time of listing, habitat loss from reservoir inundation is no longer believed to be a threat to the long-term survival of the species.

Habitat Modification From Reduced Instream Flows

a. Hydrology and Historic Instream Flows.

Even prior to the Concho water snake listing in 1986, a primary concern for the conservation of the species has been the potential impacts of habitat modification that occurs with reductions in instream river flow rates throughout its range (Scott and Fitzgerald 1985, p. 33). The source of these concerns originates from the storage and use of water for human consumption (primarily the damming and diversion of surface water for municipal uses) and the compounding effects of drought (natural rainfall levels below average). In the following discussions we analyze the sources, potential mechanisms, and possible effects arising from the threats related to the reduction of instream flows.

Beginning in eastern New Mexico, the upper Colorado River watershed, including the Concho River drainage, is semi-arid with average annual rainfall ranging from 15 to 35 inches (in) (38 to 89 centimeters (cm)) (TWDB 2007, p. 132). The area has a warm and windy climate that produces average annual gross lake surface evaporation of 65 to 80 in (165 to 203 cm) (TWDB 2007, p. 133). The water that produces river flows where the Concho water snake occurs originates exclusively from rainfall precipitation. This occurs through either direct surface runoff or natural groundwater storage of rainfall and then later discharge to surface flows through spring flows or seepage out of stream banks. The Colorado River generally increases in flow rate downstream, depending on rainfall, aquifer conditions, and water releases from reservoirs.

Since the early 1900s the upper Colorado River watershed (including the Concho River) has been modified to accommodate human water demands, primarily for agricultural irrigation (about 80 percent of all water used), municipal, and industrial uses. The construction of numerous reservoirs for surface water storage significantly affects the hydrology in every part of the river system and all of the snake's range. Most of the surface water storage in reservoirs is for municipal use, while groundwater pumping serves most agricultural irrigation needs. To assess the changes in stream flow conditions over time that have already occurred, we reviewed the flow data derived from stream flow gauges within the snake's range.

The USGS operates many stream gauges that monitor stream flow conditions within the range of the Concho water snake. Asquith and Heitmuller (2008, pp. 1–10) analyzed streamflow data in Texas using statistical tools to evaluate trends over time in low-flow discharge rates. A review of seven mainstem stream gauges within the range of the Concho water snake found statistically significant declining trends in mean streamflow over the period of record at six of these seven stream gauges. They also found significant declining trends in harmonic mean streamflow for the period of record at four of the seven gauges (Asquith and Heitmuller 2008, pp. 810–813, 846–853). The period of record encompassed by analysis of these gauges ranged from 39 to 100 years of data, ending in water year 2007. The ''harmonic mean streamflow'' is a statistic derived from daily mean streamflow and is commonly used as a design streamflow for contaminant load allocations by Texas Commission on Environmental Quality (TCEQ) to address the effects of dilution to protect human health and other aquatic life forms. It is a useful statistic for evaluation of low-flow conditions to explain hydrologic changes resulting from streamflow regulation, climate change, or land-use practices (Asquith and Heitmuller 2008, p. 2). Other abbreviated analyses of stream flows have also indicated substantial historical declines (Service 2004a, pp. 35–38; Forstner *et al.* 2006, pp. 13–16). Although annual precipitation in this region varies substantially from year to year (TWDB 2007, p. 135), an assessment of statewide annual average trends of precipitation and temperature across Texas suggested no significant changes over more than the last 100 years (TWDB 2007, pp. 299–300). This suggests that human-induced changes in land and water uses over the past 50 to 100 years have resulted in lesser overall flows in the rivers of the upper Colorado River watershed.

Asquith and Heitmuller (2008, p. 8) also analyzed the percent of days where the stream gauges recorded zero flow in the river. These data are important as they would be indicative of extreme environmental conditions that could cause stress to the snake or its fish prey base. For the period of record at these gauges, the results ranged from 0.1 percent of days with zero flow at the stream gauge near San Angelo on the Concho River to 9.3 percent at the stream gauge measuring outflow from Spence Reservoir. The outflow of Spence Reservoir had many no-flow days in the period of time prior to the listing of the snake when the District routinely did not release water from the reservoir. Over the 10 years from 1998 to 2007, the percent of zero-flow days ranged from none at two gauges on the Colorado River to 25.8 percent at the gauge on the Concho River at Paint Rock (Asquith and Heitmuller 2008, pp. 810–813, 846–853). These data demonstrate that there have been considerable periods of time in recent history where

there has been no flow in the river where the snakes occur. Asquith *et al.* (2007b, pp. 469–473, 493–494) also summarized the percentage of zero-stream-flow days by month at USGS gauges and found the highest proportion of zero-stream-flow days at the seven gauges on the Colorado River within the snake's range occur during the months of July and August. For example, the stream gauge near Ballinger (located on the Colorado River between Spence and Ivie Reservoirs) had 5.1 percent of zero mean daily flow for all days from 1908 through 2003. Of the zero-flow days, over 15 percent occurred in each of the months of July and August, which was more than any other months (Asquith *et al.* 2007b, pp. 473). This may be a critical period in the life history of the snake because it is generally this time of year when female snakes give birth to young snakes (Werler and Dixon 2000, p. 216).

b. Future Instream Flows

To consider the expected water availability conditions in the foreseeable future within the upper Colorado River watershed, we reviewed the 2007 Texas State Water Plan. This planning document was developed from information provided by local regional water planning groups and it was approved by the Texas Water Development Board. It represents the best available information to use in forecasting the likely future water availability and use in Texas in the year 2060 (TWDB 2007, pp. 1–10). The range of the Concho water snake occurs in the Texas Water Planning Region F. Although this Region is somewhat larger than the upper Colorado River watershed, it is a reasonable area for us to consider for future water conditions in the range of the Concho water snake. The Region encompasses the entire upper Colorado River watershed and projections for the larger area would not be expected to differ greatly from the portion within the upper Colorado River watershed that comprises Concho watersnake habitat.

The projections from this water plan indicate that the overall human water use in Region F is expected to increase only slightly in the next 50 years. The human population is predicted to grow about 17 percent in the next 50 years, from 620,000 people in 2010 to 724,000 in 2060 (TWDB 2007, p. 43). Over the same time, the total water use in the region is expected to increase by only about 2 percent, from 807,453 acre-feet used in 2010 to 825,581 acre-feet in 2060 (TWDB 2007, p. 43). Agricultural irrigation demands are expected to decrease by 5 percent and make up 551,774 acre-feet in 2060, while municipal water demands are projected to increase 11 percent over the same period, to 135,597 acre-feet in 2060 (TWDB 2007, p. 44). Based on these projections, we do not foresee the threat of losses of instream flow substantially increasing beyond their current level in the next 50 years. However, the forecasting of future water conditions within this area has high uncertainty, largely due to the unpredictable climatic conditions (TWDB 2007, p. 297–299). The region is particularly susceptible to extreme drought, where precipitation is below average for extended periods of time (10 years or more), as the region experienced during the late 1990s and early 2000s (TWDB 2006, 1–60, 1–67). Droughts will certainly continue to occur and produce additional challenges to the water system of the upper Colorado River watershed.

An additional source of uncertainty for future instream flows is the potential effects of global climate change on water availability in this region. According to the Intergovernmental Panel on Climate Change, ''Warming of the climate system is unequivocal, as is now evident from observations of increases in global average air and ocean temperatures, widespread melting of snow and ice, and rising global average sea level'' (IPCC 2007, p. 1). Average Northern Hemisphere temperatures during the second half of the 20th century were very likely higher than during any other 50-year period in the last 500 years and likely the highest in at least the past 1300 years (IPCC 2007, p. 1). It is very likely that over the past 50 years cold days, cold nights and frosts have become less frequent over most land areas, and hot days and hot nights have become more frequent (IPCC 2007, p. 1). Data suggest that heat waves are occurring more often over most land areas, and the frequency of heavy precipitation events has increased over most areas (IPCC 2007, p. 1).

The IPCC (2007, p. 6) predicts that changes in the global climate system during the 21st century are very likely to be larger than those observed during the 20th century. For the next two decades a warming of about 0.2 °C (0.4 °F) per decade is projected (IPCC 2007, p. 6). Afterwards, temperature projections increasingly depend on specific emission scenarios (IPCC 2007, p. 6). Various emissions scenarios suggest that, by the end of the 21st century, average global temperatures are expected to increase 0.6 °C to 4.0 °C (1.1 °F to 7.2 °F) with the greatest warming expected over land (IPCC 2007, p. 6–8).

Localized projections suggest the Southwest may experience the greatest temperature increase of any area in the lower 48 States (IPCC 2007, p. 8), with warming in southwestern States greatest in the summer. The IPCC also predicts hot extremes, heat waves, and heavy precipitation will increase in frequency, resulting in high intensity and variability of precipitation that increases flooding events and long periods of drought (IPCC 2007, p. 8). Modeling efforts evaluating climate change in this region of Texas have only recently been initiated (CH2M HILL 2008; Jackson 2008; Mace and Wade 2008; TWDB 2008). As with many areas of North America, this area (central and western Texas) is projected to experience an overall warming trend in the range of 2.5–3.9 °C (4.5–6 °F) over the next 50 to 200 years (IPCC 2007, p. 9; CH2M HILL 2008, p. 6–3; Mace and Wade 2008, p. 656). The IPCC (2007, p. 8) states there is high confidence that semi-arid areas, like the western United States, will suffer a decrease in water resources by mid-century due to climate change. Although more local precipitation models vary substantially, with some even predicting increased annual precipitation, a consensus is emerging that evaporation rates in central and western Texas are likely to increase significantly (Jackson 2008, p. 21; CH2M HILL 2008, p. 7–30, 7–31). Many models are also predicting that seasonal variability in flow rates is likely to increase with more precipitation occurring in the wet seasons and more extended dry periods (CH2M HILL 2008, p. 7–30; Jackson 2008, p. 19; Mace and Wade 2008, p. 656).

An evaluation of the hydrological impacts of climate change on the annual runoff and its seasonality in the upper Colorado River watershed was conducted by CH2M HILL (2008). Four modeling scenarios (chosen to represent a range of possible future climatic conditions) were each run under a 2050 and 2080 time scenario producing annual runoff estimates at 6 sites in this watershed. For the 2050 scenarios, the results from all 4 scenarios predicted declines in annual runoff at all 6 gauges ranging from 11 to 44 percent. Annual runoff at the stream gauge on the Colorado River at Ballinger, for example, was predicted to decline by 19 to 38 percent (CH2M HILL 2008, pp. A–1–A–4). For the 2080 scenarios, one model predicted increases in annual runoff ranging from 41 to 90 percent. The other three 2080 scenarios predicted declines in annual runoff ranging from 9 to 65 percent at 6 gauges. Annual runoff at the stream gauge at Ballinger was predicted to decline by 25 to 40 percent (CH2M HILL 2008, pp. A–1–A–4). However, the modeling efforts

from this study focus on annual averages and do not account for the flooding events or long periods of drought. It is these specific extreme events that are important for maintaining habitat for the snake, and they cannot be reliably based on historic patterns upon which this study was predicated.

In addition, all climate change modeling has inherently large uncertainties due to the incorporation of many variables that are difficult, if not impossible, to accurately predict (CH2M HILL 2008, p. ES–1; Jackson 2008, p. 20). As an example, the Texas State Water Plan considered future global climate change to be a challenge for water availability forecasting in 2060. However, the uncertainties associated with climate change were very large in comparison with other uncertainties, such as those associated with population growth and water demand. As a result, the State did not believe that climate change concerns warranted specific planning measures at the time (TWDB 2007, p. 299). However, expected future warming from climate change could significantly increase potential evaporation rates in the region, in combination with expected reduced precipitation and extended droughts in western Texas.

c. Maintenance of Instream Flows

Efforts to minimize the potential impacts of reduced instream flows by securing minimum flow releases from the Colorado River reservoirs began with the 1986 BO. It included measures for the District to maintain certain flow conditions downstream of both Spence and Ivie Reservoirs (Service 1986, pp. 14–19) for the benefit of the snake and its habitat. These two reaches represent an estimated 57 percent of all snake habitat available and 69 percent of available high-quality habitat (Service 2004a, p. 70). These minimum reservoir releases were maintained by the District until 2004 (Service 2004a, pp. 43, 45) when the Service revised the 1986 BO and reduced the required flow rates from both reservoirs (Service 2004a, pp. 11–13). The analysis in the 2004 BO included updated biological information that the snakes use more diverse riverine habitats (such as pools, in addition to riffles) and were found in the reservoirs and tributaries (Dixon 2004, pp. 9, 16; Service 2004a, pp. 53–54). As a result of that consultation we gave our biological opinion that the reduced reservoir releases described in the proposed agency action were not likely to jeopardize the continued existence of the Concho water snake and were not likely to destroy or adversely modify designated critical habitat.

The Service determined that lower minimum flow rates were sufficient to maintain the habitat and populations of the Concho water snake (Service 2004a, pp. 53–54). The District will, to the extent there is inflow into Spence Reservoir, maintain a minimum flow in the Colorado River downstream of not less than 4.0 cubic feet per second (cfs) (0.11 cubic meters per second (cms)) during April through September and 1.5 cfs (0.04 cms) during October through March. To the extent there is inflow into Ivie Reservoir, the District will maintain a minimum flow in the Colorado River downstream of Ivie Reservoir of not less than 8.0 cfs (0.23 cms) during the months of April through September and 2.5 cfs (0.07 cms) during the months of October through March (Service 2004, pp. 11–12). The expectation for the District to implement the 2008 MOU and the expected extent of low-flow conditions are addressed in detail in discussions below.

When the Concho water snake is delisted, the minimum flow requirements required by the 2004 BO will no longer apply. However, the purpose of the 2008 MOU is for the District to provide assurance that minimum reservoir releases will continue in perpetuity, consistent with the 2004 Biological Opinion (BO, Service 2004a, pp. 11–12). The releases are the same as those required in the 2004 BO, and the District has agreed to maintain these flows, to the extent there is inflow, when the Concho water snake is removed from the Federal list of threatened species. The 2008 MOU acknowledges the Service's ability to add the Concho water snake back to the list of protected wildlife, even under emergency listing provisions, if future conditions warrant.

We have confidence that the District will implement the MOU in good faith after the Concho water snake is removed from the threatened list. The District has implemented every activity requested by the Service in previous biological opinions beginning in 1986 (Service 2004a, p. 42–47). The minimum flows required in the 2004 BO have been implemented by the District, and those flow requirements were duplicated in the 2008 MOU. The District has an excellent track record of carrying out conservation actions to benefit the Concho water snake (Freese and Nichols 2006, pp. 6.1–6.13). In addition, the post-delisting monitoring plan for the Concho water snake includes monitoring of instream flows to monitor stream conditions and verify that flows called for in the 2008 MOU are being realized.

The District has maintained flows from both Spence and Ivie Reservoirs. This is demonstrated by measures of the daily median flow at two gauges downstream of the reservoirs. Daily median flows (*i.e.,* the number where half the recorded flows are higher and half are lower within a given day of records) provide a better assessment for this purpose than the daily mean flow, which would be skewed higher due to very short-term high-flow flood events. Daily median flows (calculated for each calendar day from the mean daily discharges for the time period referenced) in the reach of the Colorado River below Spence Reservoir (as measured at the USGS gauge near Ballinger since Spence Reservoir was constructed, 1969–2007) exceeded 4.0 cfs (0.11 cms) in the summer (April through September) all but 12 days out of a total of 183 days. During the winter (October through March), daily median flows always exceeded 1.5 cfs (0.04 cms). Daily median flows in the reach of the Colorado River below Ivie Reservoir (as measured at the USGS gauge at Winchell since Ivie Reservoir was constructed, 1990–2007) exceeded 8.0 cfs (0.23 cms) in the summer (April through September) all but 15 days out of a total of 183 days. During the winter (October through March), daily median flows always exceeded 2.5 cfs (0.07 cms). Based on these past actions, we believe that the District will continue to maintain instream flows in the foreseeable future.

The 2008 MOU allows the District to reduce or discontinue minimum flow releases below either reservoir based on inflow or when water storage in that reservoir falls below about 12 percent of capacity. Since Spence Reservoir was initially filled in 1971, the water level elevation has only been below this mark during the period from 2002 to 2004, at the end of a prolonged drought from 1992 to 2003 (District 2005, pp. 39–43). Ivie Reservoir has not been below this mark since it initially filled in 1991 (District 2008, pp. 1–2). Based on the historic record and the foreseeable future of about 50 years, we would expect these conditions to occur infrequently. Using data from Spence Reservoir where this storage level has occurred, it has happened less than 10 percent of the time since 1971 (3 years out of 37 years of operation).

We also anticipate that small amounts of water and minimal stream flows will still be present at most times of the year in the gaining reaches of the Colorado River and below Spence and Ivie Reservoirs due to dam leakage and

seepage, contributing inflow from creeks and sub drainages, and discharges from springs where shallow groundwater interfaces with the stream (Dixon 2004, p. 9). The gaining nature of the river reach downstream of Spence Reservoir is particularly evident as both the annual mean flow and harmonic mean streamflow increased between the stream gauge measuring outflow of the reservoir and the gauge at Ballinger, some 50 mi (80 km) downstream (Asquith and Heitmuller 2008, pp. 810–813). This gaining stream trend is greatly controlled by ambient weather conditions. For example, during periods of long-term drought (more than 10 years), the tributaries and springs will cease flowing or have significantly lower flow. However, during average rainfall periods, these sources of water help to restore and maintain more stable instream flows in the main rivers (Service 2004a, p. 50). Additionally, even when releases from dams have ceased, normal seepage from a dam occurs and provides for the formation of pools (large and small) that can provide habitat for the Concho water snake and the fish it preys upon for varying periods of time. When dam releases are resumed, the pools (located upstream of low-head dams and up and downstream from spring areas) that may have served as refuge habitat are reconnected by flowing water (Dixon 2004, p. 16).

Texas water law requirements also result in maintenance of some instream flow. Texas observes traditional appropriative water rights, which is also known as the ''first in time, first in right'' rule (see Texas Water Code § 11.027). The State's water policy requires the TCEQ to set, to the extent practicable, minimum instream flows to protect the State's water quality when issuing water rights permits (see Texas Water Code § 11.0235(c)). Furthermore, Texas water law prohibits the owner of stored water from interfering with water rights holders downstream or releasing water that will degrade the water flowing through the stream or stored downstream (Texas Water Code § 297.93). The District's 1985 water rights permit associated with Ivie Reservoir (TCEQ 1985, Permit #3676, p. 4) requires the District to maintain minimum flows below Ivie Reservoir of 8 cfs (0.23 cms) from April through September and 2.5 cfs (0.07 cms) from October through March (consistent with flows called for in the 2008 MOU). Flows are often also provided downstream of both Spence and Ivie Reservoirs to ensure water quality and provide for downstream water rights. Releases from Spence Reservoir are periodically made to improve the quality of water entering Ivie Reservoir. Spence Reservoir is known to be high in dissolved solids and chlorides (District 2005, pp. 24–27), so if flows into Spence Reservoir are low, water quality in the reservoir can become degraded unless high volumes of water are released. Therefore, long-term low-flow releases or no releases from Spence and Ivie Reservoirs are rare unless an emergency situation occurs.

d. Response of Species to Reduced Instream Flows

We considered the potential impacts on the Concho water snake of reduction of instream flows from water management actions. We also considered the effects of short-term large-magnitude instream flow declines resulting from droughts that are expected to occur in some frequency over the next 50 years in the foreseeable future. In summary, we found that the best available information from numerous ecological studies by snake experts supports the conclusion that the species is well adapted to endure the occasional conditions of extreme low flows or periodic cessation of flows.

There are no specific studies that have evaluated the effects of declining instream flows on the snake's habitat or populations. However, we can assume that the linear extent of dewatered riverine habitats during extended drought periods could be quite large and the length of time without flows could extend for several months or more (Service 2004a, p. 51). These habitat modifications could impact the snake by decreasing reproductive success during the summer months, reducing the snake's fish prey base, or reducing over-winter survival during their hibernation period.

Recent monitoring studies have provided observations that suggest Concho water snakes have the ability to survive extreme low-flow periods. For example, Elm Creek had experienced a number of extended no-flow periods over several years prior to 2004 and then flooded in August 2004. A review of the flow data from the USGS stream gauge on Elm Creek near Ballinger found 44 percent of all days between January 2000 and July 2004 recorded no discharge. In September 2004, Dixon (2004, p. 11) noted Concho water snakes inhabited the site. Dixon (2004, p. 12) surmised that snakes either moved from the mouth of Elm Creek at the Colorado River (a distance of 4.6 mi (7.4 km)), or existed in deep pools somewhere within a returnable distance to the site. Another example of snake persistence during dry times was the drying of Ballinger Lake in 2004 and confirmation of reproductive snakes in the lake in 2005 following rains (Dixon 2004, p. 4; Forstner *et al.* 2006, p. 15; Whiting *et al.* 2008, p. 443).

The best demonstration of the Concho water snake's endurance of low-flow conditions is found in the Concho River. Two large dams on the Concho River just upstream of the City of San Angelo capture essentially the entire upper Concho River watershed. There have never been minimum flows purposely provided for the snake in the Concho River. This has resulted in extreme low flows in the downstream reaches. We presume the low flows are maintained from small gains from groundwater discharge or return flows (Dixon 2004, pp. 8–9). Since 1916, the annual mean streamflow at the flow gauge at Paint Rock on the Concho River has declined from 136 cfs (3.85 cms) for the 92-year period of record down to 24.8 cfs (0.7 cms) for the recent 10 years from 1998 through 2007. The harmonic mean streamflow at this gauge has declined from 1.0 cfs (0.03 cms) for the period of record to 0.3 cfs (0.01 cms) for the recent 10 years (Asquith and Heitmuller 2008, pp. 849–850). Over the same time periods the gauge has recorded zero flow for 8 percent of the days for the period of record and 25 percent of the days from the recent 10 years (Asquith and Heitmuller 2008, pp. 849–850). These flow data represent extreme low-flow conditions resulting from long-term human water use and recent short-term drought and have been accompanied by degradation of habitat by silting in of the stream and encroachment of vegetation (Dixon 2004, pp. 8–9). Despite this apparent long-term habitat modification, the snake continues to persist in this reach, and Forstner *et al.* (2006, p. 8) found the highest numbers of Concho water snakes (20 of all 45 snakes captured or observed during their brief surveys) in this reach of the Concho River.

The mechanism for persistence in these conditions of long periods of drought, according to Dixon (2004, p. 9), is the ability of the snakes to use pools of water that form upstream of low-head dams (small private dams, a few feet tall, that create pools upstream and riffle-like areas downstream). Within both the Concho and Colorado Rivers, these pools can extend two-thirds of a mile (1 km) or more up river (depending on dam height). The riffles and pools that lie upstream of these low-head dams may not completely dry up because of small springs and creeks nearby. These pools act as refuges for juvenile and adult Concho water snakes when measurable flow ceases (Dixon

2004, p. 9). Concho water snakes have been located in pools behind low-head dams along the Colorado River, and Dixon (2004, p. 9) states that it is reasonable to expect the small pools behind low-head dams on the Concho River to act in the same way. Also, even during drought, water continues to flow over bedrock in some areas, and snakes have been observed foraging for fish in the diminished flow. The extent of solid bedrock in some of the riffle systems tends to maintain the nature of the riffle and does not allow vegetation to root and collect debris and silt (Dixon 2004, p. 9).

Another way the snakes may endure drying conditions is to use deep burrows for over-winter hibernacula (shelters for hibernating snakes). Greene (1993, pp. 89, 94) found Concho water snake hibernacula within 19.7 ft (6 m) of water with a mean depth of 1.7 ft (0.52 m). Hibernacula types included crayfish burrows, rock ledges, debris piles, and cracks in concrete of low water crossings for adults and loose embankments of rock and soil for juveniles. Dixon (2006, p. 2) stated that during droughts the snakes were possibly in the crayfish burrows, since they may retain moisture longer.

Lack of forage fishes available for prey by the snakes is another reason that drought and resulting decreasing flows could impact Concho water snakes. Fish are the principal food of the Concho water snake (Williams 1969, pp. 9–10; Dixon *et al.* 1988, p. 16; 1989, p. 8; 1990, p. 36; 1992, p. 6; Thornton 1990, p. 14; Greene *et al.* 1994, p. 167). At the time of listing, we believed that declining flows, inundation, pollution, and other habitat threats would have adverse impacts on riffle-dwelling fish (51 FR 31419). However, the snakes are not species-specific and have been shown to take advantage of whatever small-bodied species is most abundant. A review of the 10 years of fish surveys by the District from 1987 to 1996 showed that the snakes were opportunistic predators on a variety of fish species (Thorton 1992, pp. 16–34; Service 2004a, pp. 68–69). The most abundant fish available and in the snake diet are fish species that are adapted to harsh stream conditions (intermittent flow and poor water quality), such as red shiners (Burkhead and Huge 2002, p. 1) and fathead minnows (Sublette *et al.* 1990, pp. 162–166). Together these two fishes made up two-thirds of the diet of the Concho water snakes. Because of their ability to withstand harsh stream conditions, we expect these fish species to persist in the harshest environments, and they can recolonize stream reaches after dewatered conditions end. In addition, information indicates the snake is able to survive in captivity for up to 12 months with a reduced food supply (Dixon 2006, p. 2). This suggests that the snakes can endure a short-term absence of food resources when forage fish are scarce. The periodic loss of stream flows due to drought will impact fish availability in the river, but the snakes are adaptable to prey upon whatever fish species survives the low flows or survive without food for short periods.

e. Summary of Habitat Modification From Reduced Instream Flows

In conclusion, we expect extreme low-flow and drying river conditions to occur only rarely within most of the range of the snake. However, when extreme drought (10 years or more of below-average annual precipitation) does occur, the snake is adapted to withstand harsh conditions. Species experts are confident that the Concho water snake has evolved and adapted for thousands of years through many documented extreme droughts (Forstner *et al.* 2006, pp. 17–19). Forstner *et al.* (2006, pp. 16, 20) indicate that, despite the inevitable impacts and future stressors on this taxon by anthropogenic and natural cycles, the snake has persisted in an environment for the past several millennia that has seen ''frighteningly intense periods of drought.'' The Concho water snake has survived historically under extreme drought and low-flow conditions (Forstner *et al.* 2006, p. 22). Climate change could alter the overall water availability and seasonality of flows in the range of the snake, but the uncertainties associated with forecasting the effects of climate change and where they will occur are so great, relative to the threats of population growth and water demand, that the State did not believe that it warranted planning efforts. Because of the high uncertainty on the effects of climate change, we cannot reliably predict if river conditions in the foreseeable future will be significantly worse than historical conditions. Thus, we find that the threat of habitat modification from the reduction of instream flows caused by reservoir operations and drought is not likely to endanger the Concho water snake in the foreseeable future.

Habitat Modification From Reduced Channel Maintenance Flows

At the time of listing, we were concerned that the construction of Ivie Reservoir would prevent floodwater scouring by large flows that serve to maintain natural river conditions. Channel scouring occurs when flood waters transport silt and fine materials downstream and displace encroaching vegetation from the river channel. In other words, large flood events serve to physically displace vegetation growing in the silt and sand along the banks within the stream channel. These channel maintenance flows are important to remove the fine substrates and vegetation and maintain the riffles, gravel bars, and rocky stream bank habitats often used by the snakes as foraging habitat. Without such flooding, riffle habitat is modified as the rocky streambed becomes covered with silt and vegetation becomes established and armors the stream bank. Riffle habitat creates sites for reproduction and habitat for small fish that young snakes prey upon. Although in some reaches, such as some sites on the Concho River, the dominant substrate is solid bedrock, and the cracks and breaks in the rock serve the same purpose as riffles as a place for snakes to feed (Dixon 2004, p. 9).

Asquith *et al.* (2007a, pp. 469–473, 491–494) analyzed trends over time for the annual maximum streamflow and found statistically significant declining trends in flow during the period of record at six of the seven gauges on the Concho and Colorado Rivers within the range of the Concho water snake. Also, review of the hydrograph of the daily stream flow data for the period of record at these seven stream gauges shows a decline in the frequency and duration of high-flow events (Asquith and Heitmuller 2008, pp. 810–813, 846–853).

However, some high flows continue to occur naturally even during recent drought periods. For example, over the 10 years from 1999 to 2008 the USGS stream gauge on the Colorado River near Ballinger, downstream of Spence Reservoir, recorded streamflow events of over 1,000 cfs (28 cms) in 6 of the 10 years and had a peak flow of over 9,500 cfs (270 cms) in June of 2000 (USGS 2008). For the same time period at the gauge at Winchell, downstream of Ivie Reservoir, 9 years had flow events exceeding 1,000 cfs (28 cms) with a peak flow of 16,500 cfs (470 cms) in July 2002 (USGS 2008). The gauge at Paint Rock, on the Concho River, also had streamflow events exceeding 1,000 cfs (28 cms) for 9 of the 10 years with a peak flow of over 5,000 cfs (140 cms) in November 2004 (USGS 2008). In addition, the 2008 MOU with the District calls for periodic high rates of discharges to manage water quality in the reservoirs. These releases could be coupled with flood runoff events and may function as channel maintenance flows. We have no reliable means to

reasonably forecast the frequency and occurrence of future high flows in the river. However, some global climate change models are indicating a possible future trend of more precipitation occurring during wet seasons (Mace and Wade 2008, p. 656), although there is substantial uncertainty with future predictions. If this occurs over the next 50 years, it could increase the number and magnitude of high discharge events that would serve as channel maintenance flows in the range of the Concho water snake.

One consequence of reduced flushing flows is the increase in abundance of salt cedar (*Tamarisk* sp.), a nonnative species of tree that was introduced to the United States in the 1800s from southern Europe or the eastern Mediterranean region (DiTomaso 1998, p. 326). In the watersheds of Spence and Ivie Reservoirs, these plants are abundant and have been reported to have affected water quality and quantity because they consume large volumes of water and then transport salts from the water to the surfaces of their leaves. When the leaves are dropped in the fall, the salt is concentrated at the soil surface (DiTomaso 1998, p. 334; Freese and Nichols 2006, p. 5.5). The lack of flushing flows in the rivers allows these invasive plants to become established in the fine substrates along the banks and eventually reduce the amount of gravel and rocky stream substrates.

In an effort to increase water yield and reduce salt concentrations in Spence and Ivie Reservoirs, the District, in cooperation with the Texas Cooperative Extension Service, the Texas Department of Agriculture, the U.S. Department of Agriculture-Agricultural Research Service, and the Texas State Soil and Water Conservation Board (TSSWCB), has initiated a salt cedar control project in the Upper Colorado River Basin. The program includes spraying an herbicide to eradicate mass concentrations of salt cedar and then using a leaf beetle for biological control of new plant growth (Freese and Nichols 2006, p. 6.4). According to Freese and Nichols (2006, pp. 6.5–6.6), this project ''is an excellent first step in the recovery of the Upper Colorado River Basin back to many of its [pre-infestation] functions, including native riparian habitat for wildlife and improved habitat for fish and other aquatic organisms,'' and is ''one of the most crucial options for improving water quality and quantity.'' We have no information that the herbicide to be used (Arsenal) poses a direct poisoning threat to the Concho water snake and a previous section 7 consultation found only beneficial effects to the species (Service 2004b, p. 39).

Additionally, control programs for invasive brush species, such as juniper (*Juniperus* sp.) and mesquite (*Prosopis* sp.), are also being implemented in the Concho and Upper Colorado River Basins to increase water quantity (TSSWCB 2004, pp. 2–3; Freese and Nichols 2006, p. 6.6). The TSSWCB is focusing above O.C. Fisher and Twin Buttes Reservoirs upstream of San Angelo on the Concho River and over 175,000 acres (70,820 hectares) of invasive brush have been treated in these watersheds (TSSWCB 2004, pp. 2–3). The removal and control of salt cedar and other invasive brush from the riparian reaches of the Colorado and Concho Rivers helps augment existing stream discharge and also reduces buildup of dissolved solids (salts) in the soils of the riparian zone (Service 2004a, p. 56). Additionally, this removal encourages reformation of riffle areas, increases stream flow, and reduces sediment deposition, which improves instream habitat for the Concho water snake and other aquatic species (Freese and Nichols 2006, p. 6.6).

While both Dixon (2004, pp. 8–9) and Forstner *et al.* (2006, pp. 12, 15) document degradation of riffles from siltation, there are still numerous riffles throughout the range continuing to support Concho water snakes (Dixon 2004, pp. 5–8). In their recent survey of the Concho water snake and its habitat, Forstner *et al.* (2006, pp. 14, 16) found that the lack of flushing flows has allowed silt to settle and cover many of the riffles at historically occupied sites and that several sites have changed from riffles to slow-flowing sandy sections of river. Sand and silt fill in graveled cobble substrate and provide areas for growth of salt cedar and other vegetation, which further eliminates the rocky-bottomed riffle areas required by Concho water snakes (51 FR 31419; Scott and Fitzgerald 1985, p. 13; Forstner *et al.* 2006, p. 15). These changes are particularly evident at sites on the Concho River (Dixon 2004, p. 9). However, despite some riffle habitat loss and the presence of other system stressors, Forstner *et al.* (2006, p. 18) noted that the Concho water snake persisted and continued to reproduce at the majority of the sites they visited. In fact, the Concho River, where degradation has been most evident, contained the largest number of Concho water snakes captured by Forstner *et al.* (2006, p. 8).

Dixon (2004, p. 9) indicated that changes in the Concho River where the lack of flushing flow has allowed the accumulation of vegetation and debris likely caused the adult and juvenile snakes to retreat to refuge habitats in nearby pools and to areas where water flows over bedrock. Although some changes have occurred in the riverine habitat as a result of the loss of channel maintenance flows over time, the snakes appear to be adaptable to using other habitats and maintaining populations despite these changes. Therefore, we find that the threats associated with habitat modification from the reduction of frequency and magnitude of high-discharge channel-maintenance flows are not likely to endanger the Concho water snake in the foreseeable future.

Habitat Modification From Fragmentation

At the time of listing, we believed construction of Ivie Reservoir (Freese Dam) would likely segment Concho water snakes into three separate populations and thereby reduce genetic exchange (Scott and Fitzgerald 1985, p. 34). Prior to the snake's listing in 1986, no researchers had documented Concho water snakes traveling over land to circumvent the barriers caused by large dams, and snakes had not been located in reservoirs. Due to this separation, a reasonable and prudent measure in the 1986 BO was to transfer snakes annually between the river reaches separated by the dam. In 1995, four male snakes were moved from below Ivie Reservoir to river habitats above the Reservoir (District 199, p. 1). In 2006, five adult male snakes and one adult female snake were captured below Ivie Reservoir and released in the Concho River upstream of Ivie Reservoir (District 2006, pp. 1–2). Also in 2006, three male snakes and one female snake were transferred from the Concho River to Spence Reservoir (District 2006, pp. 3–4).

Because we now know Ivie Reservoir, which receives flow from both the Concho and Colorado Rivers, is occupied by the snake, we believe it is reasonable to surmise that snakes are capable of genetic interchange between the Concho and Colorado Rivers via the reservoir's shoreline. The District (1998, p. 14) summarized Concho water snake habitat within Ivie Reservoir and found that although the habitat is not linearly consistent, it does occur throughout the reservoir. Concho water snakes have been documented in mark-recapture studies to move up to 12 mi (19 km) (Werler and Dixon 2000, p. 212). Based on the occupancy of reservoirs by the snakes and the ability to move large distances, we have a high level of confidence that gene flow occurs between these river reaches.

In 2005 surveys, Forstner *et al.* 2006 (pp. 10–13, 18) found that Concho water

snakes were reproducing in the Concho and Colorado Rivers above Ivie Reservoir and in the Colorado River below it; they concluded that the populations in those three river reaches were self sustaining and seemingly viable (Forstner *et al.* 2006, pp. 16–18, 20). The 2008 MOU, as amended in 2011 and described above, Article 4.1 also provides that, in the springtime at 3-year intervals, the District, in coordination with the Service, should move five male snakes from below Spence and Freese dams to above these dams and move five different male snakes from above to below both dams. Moving snakes will be dependent upon availability of funding for the District. If the District is unable to carry out the snake movements, the Service will work with TPWD or other partners to ensure it occurs. We believe this movement will benefit the snake by enhancing genetic exchange between the three river reaches. The periodic movement of five snakes is believed to be sufficient to mimic natural gene flow (Sites and Densmore 1991, pp. 10–11) and reduce potential effects of genetic isolation among separated populations. This level of exchange exceeds the rule-of-thumb minimum of one individual exchanged with each generation (Mills and Allendorf 1996, p. 1,557). Should funding be unavailable in any particular snake-moving year, every effort will be made to move snakes in the succeeding year.

Based on the available information, we do not believe the species is likely to become endangered in the foreseeable future due to genetic isolation or habitat fragmentation.

Habitat Modification From Pollution and Water Quality Degradation

At the time of listing, we believed buildup of algae in riffle areas reduced oxygen and nutrients available to populations of fish, the Concho water snake's primary food (51 FR 31419). We were also concerned that the inflow of nutrients into the Concho River in the San Angelo area, along with reduced dilution capability associated with lower flows, created large concentrations of algae in portions of the river (51 FR 31419). A summary of the 1987–1996 fish surveys in the Colorado and Concho rivers, included in the Service's 2004 BO (Service 2004a, Appendix A, pp. 68–69), suggested that fish populations have persisted despite the presence of algae. Also, no impacts to snakes have been observed or documented as a result of water quality conditions during the ongoing drought (Service 2004a, p. 52). We have no further indication that algae buildup has occurred or has impacted the snake or its prey base. Therefore, we no longer consider algal growth and nutrient enrichment to be significant threats to the snake's survival.

The Texas State Legislature implemented the Texas Clean Rivers program in 1991. The District has actively participated in the program since that time and monitors surface water quality in the upper Colorado River basin, which includes the distribution of the Concho water snake above Freese Dam (District 2005, p. 28). The LCRA has the responsibility for water quality monitoring below Freese Dam. Both of these entities have participated in the Clean Rivers Program since 1991 and have provided a proactive response for ensuring a high level of surface water quality in the Colorado River and its main stem reservoirs (LCRA *et al.* 2007, pp. 3–4). These programs (including routine chemical and biological monitoring, environmental education, oil field clean up, superfund site cleanup, and well plugging) are ongoing and designed to ensure water quality integrity for all aquatic resources, including the Concho water snake and fish, its primary food source, in the upper basin (LCRA *et al.* 2007, pp. 13–15, 22, 28, 33–34). As water quality problems (biological or chemical) are detected, swift responses by the District and LCRA to affect corrective actions through State of Texas regulatory agencies (TCEQ and the Texas Railroad Commission) are completed (Service 2004a, pp. 52–53).

Additional water quality protections for Concho water snakes in riverine and reservoir habitats will continue indirectly under the Clean Water Act (CWA). According to the U.S. Environmental Protection Agency (2006, p. 1), the CWA establishes basic structures for regulating discharges of pollutants into United States waters, protecting water quality for species dependent on rivers and streams for their survival. Discharges are controlled through permits issued by TCEQ; within the range of the Concho water snake, these permits are mainly to small towns. With human population growth in the region forecasted at relatively small rates (estimated 17 percent increase) over the next 50 years (TWDB 2007, p. 43), we do not predict any significant increase in this threat in the foreseeable future.

Based on the lack of information documenting effects of pollution or water quality degradation on snake populations and the ongoing efforts of water agencies to monitor and maintain healthy water quality, we find that the pollution and water quality degradation is not a significant threat to the Concho water snake.

Summary of Factor A Threats

The Concho water snake was listed in 1986 largely due to threats to its habitat from the potential for habitat modification resulting from the construction and operation of reservoirs within its range. Since the listing, the snake has been shown to be more abundant and widespread than originally thought and capable of surviving in reservoirs (District 1998, pp. 18–29). Reservoir operations have provided continual stream flows that have sustained the habitat for the species, even during an extreme drought, and we expect minimum reservoir releases to continue into the foreseeable future. In addition, the snake has been shown to be equipped to handle stochastic environmental fluctuations, such as low stream-flow conditions, and has demonstrated the ability to persist even when habitat conditions appear to be less than favorable (from reservoir inundation, low river flows, or silting in of riffles) (Forstner *et al.* 2006, pp. 13–18; Whiting *et al.* 2008, p. 443). Additionally, habitat restoration efforts such as the removal of salt cedar and other brushy species and the creation of artificial instream riffle structures are aimed at improving habitat for the Concho water snake and other aquatic species. Other potential threats to snake habitat from reduced flushing flows, fragmentation, and pollution and water quality degradation have not been found to occur at the level anticipated when the species was listed in 1986, and no impacts to the Concho water snakes have been documented.

Therefore, we believe that destruction, modification, or curtailment of the Concho water snake habitat or range due to habitat loss, altered instream flows and floodwater scouring, drought, vegetation encroachment, fragmentation, and pollution no longer threaten the Concho water snake with becoming endangered in the foreseeable future of about 50 years.

B. Overutilization for Commercial, Recreational, Scientific, or Educational Purposes

At the time of listing, Concho water snakes were known to sometimes be captured or killed by recreationists (51 FR 31420). The effect of this activity on Concho water snake populations was and still is believed to be minimal. However, instances of Concho and Brazos (a closely related species occurring in an adjacent drainage) water

snakes being killed have been reported in both populated and unpopulated areas (Werler and Dixon 2000, p. 215). For example, Brazos water snakes have been crushed under stones at the water's edge by people walking on the banks and snakes have been shot by small caliber firearms. Concho water snakes may be confused with poisonous species of snakes. Fishermen have commented on their success in removing the ''water moccasins'' from the river (Forstner *et al.* 2006, pp. 18–19). At one of the historically most productive localities for Brazos water snakes, Forstner *et al.* (2006, p. 18) found no snakes in two years of searching. They noted dozens to hundreds of campers at the site each year. According to Dixon (2004, p. 2), there is not as much recreation occurring on the Concho and Colorado rivers, where the Concho water snake occurs, as there is on the Brazos River. The vast majority of the range of the Concho water snake occurs in remote, rural locations with very limited human access or use of the river. This fact suggests there is limited opportunity for direct mortality by humans. Even in areas with high recreational use, such as Paint Rock Park (a city park on the Concho River) the snake was still collected there in relatively large numbers in 2005 (Forstner *et al.* 2006, p. 8). We are unaware of any plans to increase recreational opportunities on the Colorado and Concho Rivers. Therefore, we believe that impacts from recreationists will continue to be minimal in the foreseeable future in the areas occupied by Concho water snakes.

While some limited killing of snakes is likely still occurring, there is no indication that any possible mortalities are affecting the species population levels, either rangewide or locally. Werler and Dixon (2000, p. 215) stated that malicious destruction of Concho water snakes ''probably does not constitute a major cause of mortality.'' We also have no reason to believe that this threat is likely to increase in the future.

Therefore, we find that mortality from this factor is not likely to cause the species to become threatened or endangered in the foreseeable future.

C. Disease or Predation

At the time of listing, no problems of disease or predation on Concho water snakes were known to exist (51 FR 31420). While currently no disease problems are known, predators on Concho water snakes have been identified. As is true for most snakes, predation by other wildlife is considered a major natural source of mortality for Concho water snakes (Werler and Dixon 2000, p. 215). Predators documented to prey on Concho water snakes include kingsnakes (*Lampropeltis getula*), coachwhip snakes (*Masticophis flagellum*), racers (*Coluber constrictor*), raccoons (*Procyon lotor*), and great blue herons (*Ardea herodias*) (Williams 1969, p. 15; Dixon *et al.* 1988, p. 18; Greene 1993, p. 102). Raptors such as hawks (*Buteo* spp.) and falcons (*Falco* spp.) are also known to prey upon snakes (Steenhof and Kochert 1988, p. 42). Predatory fish include bass (*Micropterus salmoides*) and channel catfish (*Ictaclurus punctatus*) (McGrew 1963, pp. 178–179; Jordan and Arrington 2001, p. 158). However, all of these predators are native to this region, Concho water snakes evolved tolerating predation by these species, and we have no information indicating that the natural levels of predation are likely to increase.

Therefore, we find that impacts from predation by other wildlife are not likely to cause the Concho water snake to become threatened or endangered in the foreseeable future.

D. The Inadequacy of Existing Regulatory Mechanisms

The Concho water snake was listed as endangered by the State of Texas in 1984. In 2000, it was removed from the State's list of threatened species (TPWD 2000, p.3) because TPWD no longer considered it likely to become endangered based on the information provided by the District (District 1998); therefore, it will not protect Concho water snakes if we delist the species. However, the lack of protection of the Concho water snake by the State is not considered a threat because TPWD regulations only prohibit the taking, possession, transportation, or sale of designated animal species without the issuance of a permit. There is no protection by State law for the habitat of state-listed species. Since the Concho water snake is not threatened due to taking, possession, or sale of individuals, the lack of State protections does not affect the status of the species.

The Texas Clean Rivers program, the Clean Water Act, and other Texas water law requirements, all discussed earlier under Factor A, provide some benefits to protect the habitat of the Concho water snake. These programs, in conjunction, with natural stream inflows and minimum flows from dam operations, indirectly conserve riverine habitats for the species.

As a result, inadequacy of existing regulatory mechanisms does not constitute a threat to the Concho water snake such that it is likely to become endangered in the foreseeable future.

E. Other Natural or Manmade Factors Affecting Its Continued Existence

We are unaware of any other natural or manmade factors affecting the continued existence of the Concho water snake at this time.

Conclusion of the Five-Factor Analysis

Foreseeable Future

In considering the foreseeable future in the threats analysis for the Concho water snake, we generally regarded about 50 years as a timeframe where some reasonable predictions could be made. This range of time originated from the analysis of forecasting for water management, which is looking ahead to expected conditions in the year 2060 (TWDB 2007, p. 2), and consideration of climate change models, which typically forecast 50 to 100 years into the future; however, there was too much uncertainty with the 100-year timeframe to serve as a reasonable foreseeable future (Jackson 2008, p. 8; Mace and Wade 2008, p. 656). Since habitat modification from changing stream flows as a result of water availability and management is the primary threat of concern, this timeframe is appropriate for our analysis. This is also a reasonable timeframe for analysis considering the biology of the Concho water snake. The snakes become sexually mature at 2 or 3 years old and reproduce annually (Werner and Dixon 2000, p. 216), with a likely lifespan rarely exceeding 5 years (Mueller 1999, p. iii; Greene *et al.* 1999, p. 707). A 50-year timeframe would encompass about 10 lifespans and multiple generations for the species. Considering multiple generations is important for any possible changes over time in rates of reproductive success and recruitment (growth to adulthood). This timeframe also captures the future stochastic hydrologic conditions (particularly droughts of 10 years or more and floods) and the expected responses by a short-lived, fast-growing species such as the Concho water snake.

Application of the Recovery Plan's Criteria

The recovery plan provides important guidance on the direction and strategy for recovery, and indicates when a rulemaking process may be initiated; the determination to remove a species from the Federal List of Endangered and Threatened Wildlife is ultimately based on an analysis of whether a species is no longer endangered or threatened. The following discussion provides a brief

review of the recovery criteria and goals as they relate to evaluating the status of the species.

Recovery Criterion 1: Adequate Instream Flows

The 1993 Recovery Plan called for assurance of adequate instream flows to maintain both the quantity and quality of Concho water snake habitat so that occupied habitat would continue to support viable populations of the species (Service 1993, p. 33). At the time the recovery plan was completed, adequate instream flow rates were based on the constituent elements identified in the 1989 critical habitat designation (54 FR 27382) and the reasonable and prudent alternatives identified in the 1986 BO for the construction of Ivie Reservoir. However, as the following new information became available, our understanding of the instream flow requirements necessary to support viable population of the Concho water snake has changed substantially. The topics summarized here are discussed at length above in section *A. The Present or Threatened Destruction, Modification, or Curtailment of Its Habitat or Range,* Habitat Modification from Reduced Instream Flows.

First, lower flow rates have supported reproductive snake populations despite extended droughts. The revised lower flow rates were found adequate to support riverine habitat for the snake (Service 2004a, pp. 50–52). This was based on new information from numerous studies funded by the District in the 1990s that greatly added to our knowledge of the biology of the snake and its habitat (District 1998, pp. 18–29). Additional monitoring of the snake indicated that the population was sustained by the lower flows required in the 2004 BO (Forstner *et al.* 2006, pp. 13–18). While riverine habitat is important for the conservation of the snake, the need to maintain continuous flows at levels previously required were determined to no longer be necessary to provide adequate habitat for snakes. The flows described in the Recovery Plan and the specific flows included in the 1989 critical habitat designation were based on the best scientific information at that time. However, subsequent information provided by species experts Forstner, Dixon, and Thornton indicates that the snake will survive, reproduce, and maintain population viability with less stream flow.

Second, information on the snake's habitat indicates they are more of a generalist (Dixon 2004, pp. 8–9) occurring in reservoirs and pools in rivers and do not depend on the previously accepted narrow habitat requirements restricted to riffles in rivers (Dixon 2004, 14–16). In addition to riverine habitat, the snake is known to use areas above and below low-head dams, pools created by the dams, man-made lakes, naturally occurring pools in the river, and tributaries, as Concho water snake has been found in Elm Creek and two of its tributaries.

Third, adequate flow to maintain the snake's habitat and the snake population is provided by a variety of sources in addition to the minimum flows agreed to in the 2004 BO (Service 2004a, p. 11–12), and subsequently agreed to in the 2008 MOU. We expect minimal stream flows will be present at most times of the year in the gaining reaches of the Colorado River from contributing inflow from creeks and subdrainages, and discharges from springs where shallow groundwater interfaces with the stream (Dixon 2004, p. 9). Low flows are also present below Spence and Ivie Reservoirs due to dam leakage and seepage even when no releases are being made (Dixon 2004, p. 9). In addition, Texas water law requirements also result in maintenance of some instream flow, particularly in the river reach below Ivie Reservoir where the District's water right permit requires minimum flows of 8 cfs (0.23 cms) from April through September and 2.5 cfs (0.07 cms) from October through March. Finally, dam releases from Spence Reservoir are periodically made to improve the quality of water (by diluting the salt content) entering Ivie Reservoir. All of these sources help maintain instream flows that provided habitat to the Concho water snake.

Recovery Criterion 2: Viable Populations

The Recovery Plan (Service 1993, p.33) also called for maintaining viable populations of the snake in each of the three major reaches. The Recovery Plan defines viable population as one that is self-sustaining, can persist for the long-term (typically hundreds of years), and can maintain its vigor and its potential for evolutionary adaptation (Service 1993, p. 33).

As previously described (see *A. The Present or Threatened Destruction, Modification, or Curtailment of Its Habitat or Range,* Range and Population Trends), monitoring studies from 1987 through 1996 confirmed a larger and more consistent distribution of the Concho water snake throughout its range, including several reservoirs and tributaries (District 1998, pp. 10, 22, 26). In addition, over the 10 years of study, 9,069 Concho water snakes were captured (excluding recaptures) (District 1998, p. 21). Of this total, 1,535 (17 percent) were captured in reservoirs, 1,517 (17 percent) were captured in the Concho River reach, 5,586 (62 percent) were captured in the Colorado River reach, and another 415 (5 percent) were captured in tributary streams. Although the results varied by year and location, each of the more than 20 sites monitored throughout the study had multiple captures of snakes, usually with a variety of age classes (Thornton 1996, pp. 26–50).

Unfortunately, the high variation in sample efforts and environmental conditions prevented a thorough analysis of population trends over time or calculation of total population estimates (District 1998, p. 18). In other words, in order to measure the changes in abundance over time the study would have had to include a quantification of the amount of effort expended during each survey. Such data would have allowed a standardization of results over time to evaluate potential trends in population abundance of the snake. The researchers decided there was too much variation in the environmental conditions and resulting catch rates to produce such estimates and did not report the amount of effort expended during the surveys, making a trend analysis inappropriate.

Forstner *et al.* (2006, pp. 6–8, 18, 20) reviewed the past population data collected on the snake (District 1998, p. 18–26), as well as conducted field surveys in 2004 and 2005 to document that snakes continued to be present and were reproducing in each river reach and reservoir where they occurred in previous studies. The study, which incorporated the results by Dixon (2004), confirmed reproducing populations of Concho water snakes in each river reach and in both Ivie and Spence Reservoirs (Forstner *et al.* 2006, p. 12). Based on the snakes' persistence and continued reproduction throughout its range over the past 20 years, Forstner *et al.* (2006, pp. 18, 20) concluded that viable populations of Concho water snakes could be presumed to exist in all three reaches of the species' range.

There was some concern by peer reviewers of the proposed rule regarding the population of the snake in the reach of the Colorado River downstream of Freese Dam (Ivie Reservoir) where only two sample locations (below Freese Dam and at River Bend Ranch, about 25 miles (40 km) downstream of the dam) (Dixon 2004, pp. 8, 14) were sampled due to the difficulties in establishing contact with private landowners in this reach. Dixon collected three snakes from these two sites in 2004, and one was a juvenile female (Dixon 2004, pp. 16–17). In 2005, Forstner *et al.* (2006, pp. 12, 18)

reports collection of one post-partum female below Freese Dam indicating the snake had given birth to young, confirming reproduction. Although only four snakes were captured in limited sampling efforts in 2004 and 2005 in this reach, data from the District's earlier monitoring showed healthy populations in this reach (District 1998, pp. 34–38, 50). We have no reason to conclude that the snake population downstream of Freese Dam is of additional concern.

A reanalysis of Concho water snake monitoring data collected from 1987 to 1996 attempted to evaluate the population dynamics of the species and quantitatively assess the long-term viability (Whiting *et al.* 2008, pp. 438–439). The results, however, were inconclusive because the data were insufficient to reliably estimate survival and emigration. This was due primarily to insufficient sampling at any single study site, along with a host of variables, especially different environmental conditions within a site and among sites, and also because dispersal rates were not measured among sites (Whiting *et al.* 2008, p. 443). This situation resulted in the survival rates from the capture-recapture study being biased low and producing low estimates of annual survival with large standard errors (Whiting *et al.* 2008, p. 443). However, Whiting also stated that snakes continued to persist even in drought-prone areas, some with almost total water loss, with hydrologically dynamic systems (Whiting *et al.* 2008, pp. 442–443). Although we lack recent data on population size and viability, we have used data on current range, long-term persistence, and verification of recent breeding success as indicators that the current populations meet the definition of a viable population.

Recovery Criterion 3: Movement of Snakes

The Recovery Plan also provided for the movement of Concho water snakes (Service 1993, p. 33) to counteract adverse impacts of population fragmentation and prescribed the movement of four snakes (two of each sex) every 5 years in a specific pattern above and below Ivie Reservoir and between the Concho River reach and the Colorado River reach downstream of Spence Reservoir. The 2004 BO discussed population fragmentation (Service 2004a, p. 52) and found that the specific requirement for snake movements would best be served by moving five male snakes from downstream to upstream of both the dams at Spence and Ivie Reservoirs once every 3 years. The 2008 MOU, as amended in 2010, now calls for the same movements of snakes and also includes movement of snakes from above to below both dams by the District even after the species is delisted. Since snakes are now known to occur in Ivie Reservoir, there is no longer a need to move snakes between the Concho River reach and the Colorado River reach downstream of Spence Reservoir, as those reaches are naturally connected. We added the requirement to move snakes above Spence Reservoir so that the population in Spence Reservoir can maintain genetic mixing with the riverine snakes downstream. We determined that moving only male snakes was sufficient to accomplish the objective of genetic exchange because a male will fertilize multiple females, providing opportunities for maintaining genetic diversity. We increased the frequency of snake transfers from 5 years called for in the recovery plan to an interval of 3 years to decrease the likelihood of population fragmentation. The Service believes that these movements are more than sufficient to maintain genetic heterogeneity between the separated populations (Service 2004a, p. 52) because research has shown that as few as one individual exchanged with each generation is sufficient to maintain adequate gene flow between animal populations (Mills and Allendorf 1996, p. 1,557). Also see the discussion above under Habitat Modification From Fragmentation.

Conclusion

As required by the Act, we considered all potential threats under the 5 factors to assess whether the Concho water snake is threatened or endangered throughout its range. We found that the best available information indicates that the Concho water snake is no longer threatened with becoming endangered throughout all of its range due to recovery accomplishments and new information on the ecology of the species. Concho water snakes can survive lower flows than previously thought necessary for their survival. Natural inflows and downstream senior water rights, in concert with assurances from the 2008 MOU, will maintain adequate instream flows and reduce the impacts of uncontrollable extreme drought periods. Populations of reproducing Concho water snakes are persisting in all 3 reaches of the species' range. The snake is capable of living and reproducing in reservoirs and persisting during droughts and in apparently degraded habitats. Considering these findings, evaluated in the five-factor analysis above, and that the three Recovery Plan Criteria have either been met outright, determined here to no longer be appropriate, or conditions are insured to meet the intent of each of the criteria, we have determined that none of the existing or potential threats, either alone or in combination with others, are likely to cause the Concho water snake to become in danger of extinction throughout all of its range within the foreseeable future of about 50 years.

Significant Portion of the Range Analysis

Having determined that the Concho water snake is not endangered or threatened throughout all its range, we must next consider whether there are any significant portions of the range where the Concho water snake is in danger of extinction or is likely to become endangered in the foreseeable future.

The Act defines ''endangered species'' as any species which is ''in danger of extinction throughout all or a significant portion of its range,'' and ''threatened species'' as any species which is ''likely to become an endangered species within the foreseeable future throughout all or a significant portion of its range.'' The definition of ''species'' is also relevant to this discussion. The Act defines the term ''species'' as follows: ''The term 'species' includes any subspecies of fish or wildlife or plants, and any distinct population segment [DPS] of any species of vertebrate fish or wildlife which interbreeds when mature.'' The phrase ''significant portion of its range'' (SPR) is not defined by the statute, and we have never addressed in our regulations: (1) The consequences of a determination that a species is either endangered or likely to become so throughout a significant portion of its range, but not throughout all of its range; or (2) what qualifies a portion of a range as ''significant.''

Two recent district court decisions have addressed whether the SPR language allows the Service to list or protect less than all members of a defined ''species'': *Defenders of Wildlife* v. *Salazar,* 729 F. Supp. 2d 1207 (D. Mont. 2010), concerning the Service's delisting of the Northern Rocky Mountain gray wolf (74 FR 15123, Apr. 12, 2009); and *WildEarth Guardians* v. *Salazar,* 2010 U.S. Dist. LEXIS 105253 (D. Ariz. Sept. 30, 2010), concerning the Service's 2008 finding on a petition to list the Gunnison's prairie dog (73 FR 6660, Feb. 5, 2008). The Service had asserted in both of these determinations that it had authority, in effect, to protect only some members of a ''species,'' as

defined by the Act (*i.e.,* species, subspecies, or DPS), under the Act. Both courts ruled that the determinations were arbitrary and capricious on the grounds that this approach violated the plain and unambiguous language of the Act. The courts concluded that reading the SPR language to allow protecting only a portion of a species' range is inconsistent with the Act's definition of ''species.'' The courts concluded that, once a determination is made that a species (i.e., species, subspecies, or DPS) meets the definition of ''endangered species'' or ''threatened species,'' it must be placed on the list in its entirety and the Act's protections applied consistently to all members of that species (subject to modification of protections through special rules under sections 4(d) and 10(j) of the Act).

Consistent with that interpretation, and for the purposes of this finding, we interpret the phrase ''significant portion of its range'' in the Act's definitions of ''endangered species'' and ''threatened species'' to provide an independent basis for listing; thus there are two situations (or factual bases) under which a species would qualify for listing: a species may be endangered or threatened throughout all of its range; or a species may be endangered or threatened in only a significant portion of its range. If a species is in danger of extinction throughout an SPR, it, the species, is an ''endangered species.'' The same analysis applies to ''threatened species.'' Therefore, the consequence of finding that a species is endangered or threatened in only a significant portion of its range is that the entire species shall be listed as endangered or threatened, respectively, and the Act's protections shall be applied across the species' entire range.

We conclude, for the purposes of this finding, that interpreting the SPR phrase as providing an independent basis for listing is the best interpretation of the Act because it is consistent with the purposes and the plain meaning of the key definitions of the Act; it does not conflict with established past agency practice (*i.e.,* prior to the 2007 Solicitor's Opinion), as no consistent, long-term agency practice has been established; and it is consistent with the judicial opinions that have most closely examined this issue. Having concluded that the phrase ''significant portion of its range'' provides an independent basis for listing and protecting the entire species, we next turn to the meaning of ''significant'' to determine the threshold for when such an independent basis for listing exists.

Although there are potentially many ways to determine whether a portion of a species' range is ''significant,'' we conclude, for the purposes of this finding, that the significance of the portion of the range should be determined based on its biological contribution to the conservation of the species. For this reason, we describe the threshold for ''significant'' in terms of an increase in the risk of extinction for the species. We conclude that a biologically based definition of ''significant'' best conforms to the purposes of the Act, is consistent with judicial interpretations, and best ensures species' conservation. Thus, for the purposes of this finding, a portion of the range of a species is ''significant'' if its contribution to the viability of the species is so important that, without that portion, the species would be in danger of extinction.

We evaluate biological significance based on the principles of conservation biology using the concepts of redundancy, resiliency, and representation. Resiliency describes the characteristics of a species that allow it to recover from periodic disturbance. Redundancy (having multiple populations distributed across the landscape) may be needed to provide a margin of safety for the species to withstand catastrophic events. Representation (the range of variation found in a species) ensures that the species' adaptive capabilities are conserved. Redundancy, resiliency, and representation are not independent of each other, and some characteristic of a species or area may contribute to all three. For example, distribution across a wide variety of habitats is an indicator of representation, but it may also indicate a broad geographic distribution contributing to redundancy (decreasing the chance that any one event affects the entire species), and the likelihood that some habitat types are less susceptible to certain threats, contributing to resiliency (the ability of the species to recover from disturbance). None of these concepts is intended to be mutually exclusive, and a portion of a species' range may be determined to be ''significant'' due to its contributions under any one of these concepts.

For the purposes of this finding, we determine if a portion's biological contribution is so important that the portion qualifies as ''significant'' by asking whether, without that portion, the representation, redundancy, or resiliency of the species would be so impaired that the species would have an increased vulnerability to threats to the point that the overall species would be in danger of extinction (i.e., would be ''endangered''). Conversely, we would not consider the portion of the range at issue to be ''significant'' if there is sufficient resiliency, redundancy, and representation elsewhere in the species' range that the species would not be in danger of extinction throughout its range if the population in that portion of the range in question became extirpated (extinct locally).

We recognize that this definition of ''significant'' establishes a threshold that is relatively high. On the one hand, given that the consequences of finding a species to be endangered or threatened in an SPR would be listing the species throughout its entire range, it is important to use a threshold for ''significant'' that is robust. It would not be meaningful or appropriate to establish a very low threshold whereby a portion of the range can be considered ''significant'' even if only a negligible increase in extinction risk would result from its loss. Because nearly any portion of a species' range can be said to contribute some increment to a species' viability, use of such a low threshold would require us to impose restrictions and expend conservation resources disproportionately to conservation benefit: listing would be rangewide, even if only a portion of the range of minor conservation importance to the species is imperiled. On the other hand, it would be inappropriate to establish a threshold for ''significant'' that is too high. This would be the case if the standard were, for example, that a portion of the range can be considered ''significant'' only if threats in that portion result in the entire species' being currently endangered or threatened. Such a high bar would not give the SPR phrase independent meaning, as the Ninth Circuit held in *Defenders of Wildlife* v. *Norton,* 258 F.3d 1136 (9th Cir. 2001).

The definition of ''significant'' used in this finding carefully balances these concerns. By setting a relatively high threshold, we minimize the degree to which restrictions will be imposed or resources expended that do not contribute substantially to species conservation. But we have not set the threshold so high that the phrase ''in a significant portion of its range'' loses independent meaning. Specifically, we have not set the threshold as high as it was under the interpretation presented by the Service in the *Defenders* litigation. Under that interpretation, the portion of the range would have to be so important that current imperilment there would mean that the species would be currently imperiled everywhere. Under the definition of ''significant'' used in this finding, the portion of the range need not rise to such an exceptionally high level of

biological significance. (We recognize that if the species is imperiled in a portion that rises to that level of biological significance, then we should conclude that the species is in fact imperiled throughout all of its range, and that we would not need to rely on the SPR language for such a listing). Rather, under this interpretation we ask whether the species would be endangered everywhere without that portion, *i.e.,* if that portion were completely extirpated. In other words, the portion of the range need not be so important that even being in danger of extinction in that portion would be sufficient to cause the remainder of the range to be endangered; rather, the complete extirpation (in a hypothetical future) of the species in that portion would be required to cause the remainder of the range to be endangered.

The range of a species can theoretically be divided into portions in an infinite number of ways. However, there is no purpose to analyzing portions of the range that have no reasonable potential to be significant and threatened or endangered. To identify only those portions that warrant further consideration, we determine whether there is substantial information indicating that: (1) The portions may be ''significant,'' and (2) the species may be in danger of extinction there or likely to become so within the foreseeable future. Depending on the biology of the species, its range, and the threats it faces, it might be more efficient for us to address the significance question first or the status question first. Thus, if we determine that a portion of the range is not ''significant,'' we do not need to determine whether the species is endangered or threatened there; if we determine that the species is not endangered or threatened in a portion of its range, we do not need to determine if that portion is ''significant.'' In practice, a key part of the portion status analysis is whether the threats are geographically concentrated in some way. If the threats to the species are essentially uniform throughout its range, no portion is likely to warrant further consideration. Moreover, if any concentration of threats applies only to portions of the species' range that clearly would not meet the biologically based definition of ''significant'', such portions will not warrant further consideration.

Based on our review of the best available information concerning the distribution of the species and the potential threats, we have determined that the Concho water snake does not warrant further consideration to determine if there is a significant portion of the range that is threatened or endangered. Through the five-factor analysis we found no areas where one or more threats are geographically concentrated. The range of the snake can readily be divided into three portions, based on the presence of large dams: (1) The Concho River segment (San Angelo to the inflow of Ivie Reservoir); (2) the upper Colorado River segment (Spence Reservoir and the Colorado River outflow downstream to Ivie Reservoir); and (3) the lower Colorado River segment (outflow of Ivie Reservoir downstream to Colorado Bend State Park). Generally, all of the potential threats to the species that were evaluated in the Summary of Factors Affecting the Species section above occur at similarly low levels in each of the three segments. However, there are some differences in flow regimes that were described in the Habitat Modification from Reduced Instream Flows section above and are considered here.

The Concho River segment has undergone the most dramatic flow reduction due to upstream dams and water diversion for human use. The result has been extended periods of very low discharges throughout much of the reach (Asquith and Heitmuller 2008, pp. 849–850). Despite the habitat alterations, the snake continues to persist in this reach and Forstner *et al.* (2006, p. 8) found the highest numbers of Concho water snakes (20 of all 45 snakes captured or observed during their brief surveys in 2004 and 2005) in this reach of the Concho River. Dixon (2004, p. 9) explains that the snakes endure these conditions by using low-flow areas over bedrock substrate for foraging and also using the pools that form behind low-head dams as habitat. Therefore, we find that the potential threats from low flows, or any other threats, in this portion of its range do not warrant continued listing of the snake.

Both the upper and lower Colorado River segments have also undergone hydrologic changes and decreases in stream flows from reservoir construction and operation (Asquith *et al.* 2008, pp. 810–813; 850–853). However, river flows have been maintained due to natural drainage inflows and minimum reservoir releases (Service 2004, pp. 35–38). Water has been released from Spence Reservoir for the benefit of the Concho water snake under the requirements of biological opinions and as part of the 2008 MOU. In addition, releases from Ivie Reservoir are required to fulfill requirements for downstream users, consistent with the flows called for in the 2008 MOU, which will continue to be implemented even if the snake is delisted. As evaluated under Summary of Factors Affecting the Species section above, we find that these flow reductions, or any other threats, in either of these segments are not threatening the species. Because the low level of threats to the species is essentially uniform throughout its range, no portion warrants further consideration to determine if they are significant.

Therefore, we find the Concho water snake is no longer threatened with becoming endangered throughout all or a significant portion of its range within the foreseeable future. We believe the Concho water snake no longer requires the protection of the Act, and, therefore, we are removing it from the Federal List of Endangered and Threatened Wildlife.

Effects of the Rule

This final rule revises 50 CFR 17.11(h) to remove the Concho water snake from the Federal List of Endangered and Threatened Wildlife. Promulgation of this final rule will affect protection afforded the Concho water snake under the Act. Taking, interstate commerce, import, and export of Concho water snakes are no longer prohibited under the Act. Federal agencies are no longer required to consult with us under section 7 of the Act to ensure that any action they authorize, fund, or carry out is not likely to jeopardize the species' continued existence. This final rule also revises 50 CFR 17.95(c) to remove the critical habitat designation.

Post-Delisting Monitoring Plan

Section 4(g)(1) of the Act requires us, in cooperation with the States, to implement a monitoring program for not less than 5 years for all species that have been recovered and delisted (50 CFR 17.11, 17.12). The purpose of this post-delisting monitoring (PDM) is to verify that the species remains secure from risk of extinction after it has been removed from the protections of the Act. The PDM is designed to detect the failure of any delisted species to sustain itself without the protective measures provided by the Act. If, at any time during the monitoring period, data indicate that protective status under the Act should be reinstated, we can initiate listing procedures, including, if appropriate, emergency listing under section 4(b)(7) of the Act. Section 4(g) of the Act explicitly requires cooperation with the States in development and implementation of PDM programs, but we remain responsible for compliance with section 4(g) and, therefore, must remain actively engaged in all phases of

PDM. We also seek active participation of other entities that are expected to assume responsibilities for the species' conservation, post-delisting.

The Service has developed a PDM plan in cooperation with the District and TPWD. We published a notice of availability of the draft plan in the **Federal Register** on September 23, 2009, (74 FR 48595) to solicit public comments and peer review on the plan. No public comments on the PDM plan were received. Comments from six peer reviewers were considered and incorporated into the final PDM plan as appropriate. The final PDM plan and any future revisions will be posted on our Endangered Species Program's national web page (*http://endangered.fws.gov*) and on the Austin Ecological Services Field Office web page (*http://www.fws.gov/southwest/es/AustinTexas/*).

PDM for Concho water snakes will consist of two monitoring components: biological (to monitor the status of the snake) and hydrological (to monitor instream flow conditions). Over a 14-year period, surveys to measure the presence, reproduction, and abundance of snakes will be conducted annually in the fall for 13 consecutive years at 9 core biological sample sites across the snake's range. In addition, more intense biological surveys will be conducted during the spring and fall of 3 years spread over the monitoring period at 18 sample sites. Evaluation of stream conditions will consist of analysis of hydrologic data collected at eight existing stream gauges from across the snake's range, which will verify that flows called for in the 2008 MOU are being realized. Quantitative and qualitative monitoring triggers for additional conservation actions are based on documented changes to the snake's range-wide distribution; observed presence and abundance at sample sites; and successful reproduction. Triggers are also established based on instream flow conditions within the snake's habitat. If monitoring results in concern regarding the snake's status or increasing threats, possible responses may include an extended or intensified monitoring effort, additional research (such as modeling metapopulation dynamics or assessing the status of the fish prey base), enhancement of riverine or shoreline habitats, or an increased effort to improve habitat connectivity by additional translocation of snakes between reaches. If future information collected from the PDM, or any other reliable source, indicates an increased likelihood that the species may become endangered with extinction, the Service will initiate a status review of the Concho water snake and determine if relisting the species is warranted.

Paperwork Reduction Act

This rule does not contain any new collections of information that require approval by OMB under the Paperwork Reduction Act (44 U.S.C. 3501 *et seq.*). This rule will not impose recordkeeping or reporting requirements on State or local governments, individuals, businesses, or organizations. An agency may not conduct or sponsor, and a person is not required to respond to, a collection of information unless it displays a currently valid OMB control number.

National Environmental Policy Act

We have determined that an Environmental Assessment or an Environmental Impact Statement, as defined under the authority of the National Environmental Policy Act of 1969, need not be prepared in connection with regulations adopted pursuant to section 4 of the Act. We published a notice outlining our reasons for this determination in the **Federal Register** on October 25, 1983 (48 FR 49244).

References Cited

A complete list of all references cited herein is available upon request from the U.S. Fish and Wildlife Service, Austin Ecological Services Field Office (see **FOR FURTHER INFORMATION CONTACT** above).

Authors

The primary authors of this document are staff located at the Austin Ecological Services Field Office (see **FOR FURTHER INFORMATION CONTACT** above).

List of Subjects in 50 CFR Part 17

Endangered and threatened species, Exports, Imports, Reporting and recordkeeping requirements, and Transportation.

Regulation Promulgation

Accordingly, we amend part 17, subchapter B of chapter I, title 50 of the Code of Federal Regulations as set forth below:

PART 17—[AMENDED]

■ 1. The authority citation for part 17 continues to read as follows:

Authority: 16 U.S.C. 1361–1407; 16 U.S.C. 1531–1544; 16 U.S.C. 4201–4245; Pub. L. 99–625, 100 Stat. 3500; unless otherwise noted.

§ 17.11 [Amended]

■ 2. Amend § 17.11(h) by removing the entry ''Snake, Concho water'' under ''REPTILES'' from the List of Endangered and Threatened Wildlife.

§ 17.95 [Amended]

■ 3. Amend § 17. 95(c) by removing the critical habitat entry for ''Concho Water Snake (*Nerodia harteri paucimaculata).''*

Dated: October 7, 2011.

Gregory E. Siekaniec,

Acting Director, U.S. Fish and Wildlife Service.

[FR Doc. 2011–27375 Filed 10–26–11; 8:45 am]

BILLING CODE 4310–55–P

FEDERAL REGISTER

Vol. 76 Thursday,

No. 208 October 27, 2011

Part III

Department of Commerce

National Oceanic and Atmospheric Administration

50 CFR Part 226

Endangered and Threatened Wildlife and Plants: Final Rulemaking To Designate Critical Habitat for Black Abalone; Final Rule

DEPARTMENT OF COMMERCE

National Oceanic and Atmospheric Administration

50 CFR Part 226

[Docket No. 100127045–1313–02]

RIN 0648–AY62

Endangered and Threatened Wildlife and Plants: Final Rulemaking To Designate Critical Habitat for Black Abalone

AGENCY: National Marine Fisheries Service (NMFS), National Oceanic and Atmospheric Administration (NOAA), Commerce.

ACTION: Final rule.

SUMMARY: We, the National Marine Fisheries Service (NMFS), hereby designate critical habitat for the endangered black abalone under the Endangered Species Act (ESA). This designation includes approximately 360 square kilometers of rocky intertidal and subtidal habitat within five segments of the California coast between the Del Mar Landing Ecological Reserve to the Palos Verdes Peninsula, as well as on the Farallon Islands, Año Nuevo Island, San Miguel Island, Santa Rosa Island, Santa Cruz Island, Anacapa Island, Santa Barbara Island, and Santa Catalina Island. This designation includes rocky intertidal and subtidal habitats from the mean higher high water (MHHW) line to a depth of −6 meters (m) (relative to the mean lower low water (MLLW) line), as well as the coastal marine waters encompassed by these areas. We are not designating the specific area from Corona Del Mar State Beach to Dana Point, California, because we conclude that the economic benefits of exclusion from the critical habitat designation outweigh the benefits of inclusion and that exclusion of this specific area will not result in the extinction of the species. We also conclude that two of the specific areas proposed for designation (San Nicolas Island and San Clemente Island) are no longer eligible for designation, based on determinations that the U.S. Navy's revised integrated natural resource management plans (INRMPs) for these areas provide benefits to black abalone.

DATES: This rule becomes effective November 28, 2011.

ADDRESSES: The final rule, maps, and supporting documents used in preparation of this final rule, as well as public comments and information received, can be obtained via the Internet at: *http://swr.nmfs.noaa.gov/abalone,* the Federal eRulemaking Portal at: *http://www.regulations.gov* (in the box that reads ''Enter Keyword or ID,'' enter the Docket number for this rule, which is NOAA–NMFS–2010–0191, and then click the Search button), or by submitting a request to the Assistant Regional Administrator, Protected Resources Division, Southwest Region, NMFS, 501 West Ocean Blvd., Suite 4200, Long Beach, CA 90802–4213.

FOR FURTHER INFORMATION CONTACT: Melissa Neuman, NMFS, Southwest Region (562) 980–4115, or Lisa Manning, NMFS, Office of Protected Resources (301) 427–8466.

SUPPLEMENTARY INFORMATION:

Background

Under the ESA, we are responsible for determining whether certain species are threatened or endangered, and, to the maximum extent prudent and determinable, designating critical habitat for all endangered and threatened species (16 U.S.C. 1533). On January 14, 2009, we determined that the black abalone (*Haliotis cracherodii*) is in danger of extinction throughout all or a significant portion of its range and listed the species as endangered under the ESA (74 FR 1937). We issued a proposed critical habitat designation for the black abalone on September 28, 2010 (75 FR 59900). This rule describes the final critical habitat designation, including a summary of and responses to the public comments received and a description of the methods used to develop the final designation. The total estimated annualized economic impact for this final rule ranged from $158,000 to $3,886,000. This range represents our estimate of the potential economic impacts based on the best available information regarding the Federal activities that may be affected by this critical habitat designation and the potential range of modifications that may be required to protect critical habitat.

Black Abalone Natural History

The black abalone (*Haliotis cracherodii,* Leach, 1814) is a shallow-living marine gastropod with a smooth, circular, and black to slate blue colored univalve shell and a muscular foot that allows the animal to clamp tightly to rocky surfaces without being dislodged by wave action. Black abalone historically occurred from Crescent City, California, USA, to southern Baja California, Mexico (Geiger 2004), but today the species' constricted range occurs from Point Arena, California, USA, to Bahia Tortugas, Mexico, and it is rare north of San Francisco, California, USA (Morris *et al.* 1980), and south of Punta Eugenia, Mexico (pers. comm. with Pete Raimondi, University of California Santa Cruz (UCSC), in 2005).

Black abalone generally inhabit coastal and offshore island intertidal habitats on exposed rocky shores where bedrock provides deep, protective crevices for shelter (Leighton 2005). These complex surfaces with cracks and crevices in intertidal habitats appear to be crucial for juvenile recruitment and adult survival (Leighton 1959; Leighton and Boolootian 1963; Douros 1985, 1987; Miller and Lawrenz-Miller 1993; VanBlaricom *et al.* 1993; Haaker *et al.* 1995). Black abalone range vertically from the high intertidal zone to a depth of −6m (as measured from MLLW) and are typically found in middle intertidal zones. However, variation in wave exposure and where drift kelp (an important food item for black abalone) accumulates may result in animals being distributed primarily in high or low intertidal zones depending on the local conditions at particular locations (see definition of intertidal zones in Ricketts *et al.* 1985). Abalone are broadcast spawners, with a short planktonic larval stage (about 3–10 days) before settlement and metamorphosis (*e.g.,* McShane 1992). Larval black abalone are believed to settle on rocky substrate with crustose coralline algae, which serves as a food source for postmetamorphic juvenile black abalone, along with microbial and diatom films (Leighton 1959; Leighton and Boolootian 1963; Bergen 1971). As black abalone grow, they transition to feeding on attached macrophytes and drift algae. The main sources of mortality for black abalone have been historical overfishing and, more recently, mass mortalities caused by the disease known as withering syndrome. As a result of the disease, most black abalone populations in Southern California have declined by 90 to 99 percent since the late 1980s (VanBlaricom *et al.* 2009) and have fallen below estimated population densities necessary for recruitment success (Neuman *et al.* 2010).

Detailed information on the natural history of black abalone can be found in the final Biological Report (NMFS 2011a) and in the proposed rule to designate critical habitat (75 FR 59900; September 28, 2010). Additional information about the status of black abalone can be found in the 2009 status review report (VanBlaricom *et al.* 2009) and in the proposed (73 FR 1986; January 11, 2008) and final (74 FR 1937; January 14, 2009) rules to list black abalone as endangered under the ESA.

Summary of Comments and Responses

We requested public comments on the proposed rule to designate critical habitat for the endangered black abalone and on the supporting documents (*i.e.,* the draft Biological Report, draft Economic Analysis Report, and draft ESA Section 4(b)(2) Report). Public comments were received over a 60-day period ending on November 29, 2010. To facilitate public participation, the proposed rule and supporting documents were made available on our Southwest Region Web site (*http://swr.nmfs.noaa.gov*) and on the Federal eRulemaking Portal Web site (*http://www.regulations.gov*). Public comments were received via standard mail, email, fax, and the Federal eRulemaking Portal. The draft Biological Report and draft Economic Analysis Report were also each reviewed by three peer reviewers. All public comments and peer reviewer comments received have been posted on the Federal eRulemaking Portal (Docket Number: NOAA–NMFS–2010–0191).

We received 4,874 written public comments on the proposed rule and supporting documents, of which 4,843 were form letters submitted by supporters of the Center for Biological Diversity (CBD) and 20 were nearly identical to the form letters but included additional information. Comments were also received from the California Department of Transportation (Caltrans), the CBD and their supporters, the Department of the Navy, the Multi-Agency Rocky Intertidal Network (MARINe), NOAA's National Ocean Service National Marine Sanctuaries Program, the U.S. Army Corps of Engineers Los Angeles District, and five individual members of the public. In addition to the 4,863 identical or nearly identical letters submitted by supporters of the CBD in support of the proposed rule, eight other commenters were supportive of the proposed rule. One commenter was opposed to the proposed rule, and two were neither opposed nor supportive. The commenters and peer reviewers provided additional data to inform the biological and economic analyses, as well as comments regarding the methods used in these analyses. NMFS and the critical habitat review team (CHRT; a team of seven Federal biologists with relevant expertise) considered all of the public and peer reviewer comments in developing the final critical habitat designation. A summary of the public and peer review comments by major issue categories and the responses thereto are presented here. Similar comments were combined where appropriate.

Black Abalone Natural History

Comment 1: One commenter stated that although the work of Burton 2008 indicated little genetic structure over moderate distances (<100 km), demographically important dispersal for black abalone is believed to be limited based on larval behavior and recruitment dynamics and thus the likelihood of rapid natural recovery of populations lost to disease is very low.

Response: We agree that recent studies (Hamm and Burton 2000; Chambers *et al.* 2006; Gruenthal and Burton 2008) indicate low connectivity among black abalone populations, likely reflecting limited larval dispersal. We note that this information was included in the proposed rule (75 FR 59900; see section titled ''Population Structure'' on pg. 59901) and was also included in the draft Biological Report (NMFS 2010a).

Comment 2: One commenter requested that the terms high, mid, and low intertidal zones be defined. The commenter disagreed with the statement that the majority of black abalone are found in the high zone at exposed locations. The commenter stated that on the Channel Islands, black abalone occur in the high zone but are predominately in the mid-zone. The commenter also stated that at mainland sites, black abalone are found in the mid to low zones but not in the high zone.

Response: We have revised the description of black abalone habitat in this final rule and in the final Biological Report (NMFS 2011a) to recognize that black abalone typically occur in the middle intertidal zones, but that local variation exists depending on the conditions (*e.g.,* the level of exposure and where kelp may be accumulating). We also clarify that the high, middle, and low intertidal zones are defined according to Ricketts *et al.* (1985). On the U.S. West coast, the high intertidal zone is typically the zone above the mussel beds and extends from mean high water to the mean flood of the higher of the two daily lows, slightly below mean sea level. The middle intertidal zone extends from mean higher low water to MLLW, and may be covered and uncovered once or twice each day. The low intertidal zone is normally uncovered by minus tides only, extending from 0 to −0.6m (−1.8 feet) or so at Pacific Grove, and typically exposed for only a few hours each month. The critical habitat designation (extending from the MHHW line to −6m depth relative to the MLLW line) encompasses each of these three zones. We recognize that the definitions of the intertidal zones do not provide precise boundaries, but note that intertidal zones are very dynamic and thus are defined in somewhat general terms based on daily tidal fluctuations and the structure of the benthic community.

Comment 3: One commenter disagreed with the statement that the primary food species for black abalone in central California habitats is *Nereocystis leutkeana.* The commenter stated that although *Nereocystis* is found at black abalone monitoring sites between Santa Cruz and Point Conception, *Macrocystis* and *Egregia* are more prominent in these central California habitats.

Response: The CHRT agreed with the information provided by the commenter, which was based on observations by biologists in the Multi-Agency Rocky Intertidal Network (MARINe). We have incorporated this information in this final rule and in the final Biological Report (NMFS 2011a).

Comment 4: One commenter stated that based on MARINe's black abalone monitoring data, recruitment failure appears to occur when the adult density falls below one abalone per m^2, whereas the proposed rule states that recruitment failure occurs when adult density declines below 0.34 per m^2. The commenter requested that the citation for this 0.34 per m^2 value be provided.

Response: In the proposed rule, we cited a paper that was in press at that time but that has since been published (Neuman *et al.* 2010). We revised the final rule and final Biological Report (NMFS 2011a) to update the citation for this paper. To determine the critical density threshold below which black abalone recruitment failure is observed, Neuman *et al.* (2010) reviewed recruitment patterns in three long-term data sets for black abalone in California. Recruitment failure was found to occur when adult black abalone density declined to an estimated 0.25 to 0.46 per m^2. Thus, the estimated average minimum adult density below which local recruitment failure occurred at the three sites was 0.34 per m^2. This estimated average minimum adult density threshold is specific to the three sites evaluated and may differ for other locations.

Comment 5: One commenter stated that the proposed critical habitat designation should not be approved because it will not lead to the recovery of black abalone populations along the California coast. The commenter also recommended revisions to the proposed rule to emphasize that predation by sea otters was a major factor that caused the decline in black abalone populations and that continuing predation by sea otters has prevented recovery of black abalone populations. The commenter

cited a paper by Micheli *et al.* (2008) showing that abalone fishery closures and no-take reserves have been effective for allowing abalone populations to persist but that abalone populations have not recovered to levels comparable to those preceding the collapse of the abalone fisheries despite these protections.

Response: The comment letter was not clear regarding whether the commenter's objection to the proposed critical habitat designation and statement that the proposed designation will not lead to recovery of black abalone populations was based on: (a) The commenter's assertion that the continued threat of predation by sea otters on black abalone is preventing recovery of black abalone populations; (b) studies showing a lack of recovery of black abalone populations despite continued fishery closure and protection in no-take reserves; or (c) other reasons not stated by the commenter. Therefore, we can only address the commenter's concerns regarding predation by sea otters and the results of the Micheli *et al.* (2008) paper.

The proposed rule listed several factors that contribute to mortality of black abalone, including predation by other species such as sea otters (see ''Mortality'' section, pg. 59902 in the proposed rule (75 FR 59900, September 28, 2010)). The proposed rule also stated that predicting the relative impacts of each of these factors on long-term viability of black abalone is difficult without further study. The commenter did not provide references to support the statement that sea otter predation was a major factor contributing to black abalone declines and that continued sea otter predation has prevented recovery of populations. However, based on the best available data, the 2009 status review report for black abalone (VanBlaricom *et al.* 2009) identified historical overfishing and mass mortalities associated with withering syndrome as the primary factors contributing to the recent declines in black abalone populations. The potential impact of sea otter predation on the recovery of black abalone populations is unknown, but the following observations indicate that sea otter predation was not and is not a major source of mortality for black abalone: (1) Sea otters were absent from southern California during the widespread decline of black abalone in that region; (2) the current last foothold for black abalone (*i.e.,* central and north-central California habitats) directly overlaps with the current range of sea otters; and (3) one of the only places in southern California where black abalone populations have been increasing and where multiple recruitment events have occurred since 2005 (*i.e.,* San Nicolas Island) is also the only place south of Point Conception where a growing population of southern sea otters exists, indicating that black abalone populations can recover and remain stable in the presence of sea otters. Micheli *et al.* (2008) identified high rates of natural mortality as well as potential illegal harvest of abalone as factors that have likely kept abalone populations along the central California coast from recovering to levels comparable to those attained during the 1950s to 1960s, preceding the collapse of the abalone fishery. However, there is recognition that the abalone population levels in the 1950s and 1960s may not represent historical baseline abundances, because they were attained during a period when sea otter populations were extremely depressed. Micheli *et al.* (2008) states that ''[t]he current levels of abalone populations in central California may reflect conditions prior to both fishing and the near-elimination of sea otters from this region, characterized by intense otter predation and low but stable densities of abalones.'' Thus, the best available data do not support the idea that sea otter predation was a major factor in the decline of black abalone populations or that it will inhibit the recovery of the species. In addition, the purpose of the critical habitat designation is to protect habitats important for black abalone conservation. Although we do not expect the designation to directly address the issue of sea otter predation on black abalone, we do expect this designation to contribute to conservation of black abalone by protecting habitats necessary to support species recovery, despite uncertainties regarding the relative impacts of natural mortality on long-term viability of populations.

Geographical Area Occupied by the Species

Comment 6: One commenter noted that within the areas proposed for designation, the habitat consists of a mixture of habitat suitable for black abalone (*e.g.,* rocky substrates) and habitat unsuitable for black abalone (*e.g.,* sandy beach). The commenter stated that the proposed critical habitat designation should be redone to only include those areas with habitat suitable for black abalone.

Response: We agree with the commenter that the areas proposed for designation within the occupied geographic range of black abalone consist of a mixture of rocky habitats that are suitable to support black abalone and expanses of sandy habitat that are not suitable to support black abalone. Thus, the essential features identified for black abalone are unevenly dispersed throughout the specific areas proposed for designation. As stated in the draft Biological Report (NMFS 2010a), data are available to map and identify general areas of rocky habitat within these specific areas. However, as permitted under our regulations (50 CFR 424.12 (d)), we selected to draw a more inclusive area around habitats in close proximity to one another that met the requirements for designation as critical habitat. This allowed for a more manageable evaluation of areas. In addition, due to the risk of illegal harvest, the CHRT did not think it prudent to identify each individual rocky reef as a specific area in order to avoid disclosing the location of survey sites where black abalone populations have been found. Instead, the CHRT delineated ten segments of the California coast and ten offshore islands as specific areas to consider for designation, based on the location of survey sites where black abalone have been observed as well as features of the habitat. The intent of the proposed designation was not to designate all habitat types within the specific areas as critical habitat, but to designate the habitat within the specific areas that contain features essential to the conservation of the species (*e.g.,* rocky habitat). The final rule has been revised to clarify that critical habitat includes only the rocky habitats (and the coastal marine waters above the benthos; see also Response to Comment 5) within the designated specific areas.

Delineation of Specific Areas Considered for Designation

Comment 7: One commenter stated that the proposed critical habitat designation neglected important habitat for the planktonic larval stages of black abalone because the designation only included rocky intertidal habitat and did not include the marine waters in which larval black abalone occur. The commenter recommended the designation of certain ocean water habitat in order to protect the larval stage of black abalone. The commenter suggested a mechanism for determining whether a particular volume of water is occupied by larval and juvenile black abalone, noting that habitat need not be occupied continuously or at all to be designated as critical habitat. The commenter also recommended consideration of spatially and temporally dynamic designations, such

as an intermittent critical habitat designation (*e.g.,* areas designated as critical habitat seasonally or only during breeding periods) or mobile critical habitat designations (*e.g.,* designating critical habitat that moves along with the species).

Response: We have revised the final rule to clarify that the designation includes not only coastal rocky habitats (from MHHW shoreward to the −6m depth contour relative to MLLW) within the designated specific areas, but also the marine waters above the rocky benthos within these areas. As indicated by the inclusion of water quality and nearshore circulation patterns on the list of proposed primary constituent elements (PCEs), we did intend for the designation to include not just the benthic substrate in the areas proposed, but also the water above it. Although not much is known about larval distribution, laboratory experiments with related species (Leighton 1972 and 1974) indicate that larvae are distributed throughout the water column down to approximately −6m relative to MLLW, and possibly beyond.

We note that the commenter's recommendation to consider a spatially or temporally dynamic designation would likely reduce the protections afforded to the species by the critical habitat designation. By designating habitat as critical habitat only during specific seasons, or only when the species is present, we would be missing an important aspect of what critical habitat is and the protections it affords a species by protecting its habitat even when the species is not present. This protection is important for maintaining the habitat for those times of the year when the species is using the habitat. This is one of the distinguishing features of a critical habitat designation versus the protections provided to the species under the listing.

Comment 8: One commenter noted several incorrect citations for data collected at long-term monitoring sites along the California coast. The commenter provided the correct citations and recommended text to explain the history of the long-term monitoring sites and their establishment. The commenter also provided updated information on black abalone monitoring activities and data in 2009 and 2010 for Point Reyes National Seashore, Golden Gate National Recreation Area, and Año Nuevo Island.

Response: We have revised the final rule and final Biological Report (NMFS 2011a) by: (a) Including a history of the long-term monitoring sites and their establishment; (b) correcting the citations for the long-term monitoring sites; and (c) updating the black abalone monitoring data for Point Reyes National Seashore, Golden Gate National Recreation Area, and Año Nuevo Island.

Activities That May Affect Black Abalone Critical Habitat

Comment 9: One commenter stated that while the proposed rule recognizes that ocean acidification may be a threat to black abalone habitat, it does not identify the specific activities that may contribute to ocean acidification. The commenter stated that the following categories of activities contribute to ocean acidification and recommended that ocean acidification be identified as a threat to the PCEs for these activities: National Pollutant Discharge Elimination System (NPDES)-permitted activities, coastal development, construction and operation of desalination plants, construction and operation of liquefied natural gas projects, and mineral and petroleum exploration and extraction. The commenter also provided several references with information on the effects of ocean acidification on marine ecosystems and organisms and strategies for monitoring, assessing, and addressing ocean acidification.

Response: The proposed rule identified ocean acidification as a potential factor imposing mortality on black abalone and stated that activities that exacerbate global climate change (*e.g.,* fossil fuel combustion) contribute to ocean acidification. We recognize that several of the activities that may affect black abalone habitat (such as those listed by the commenter) may contribute to fossil fuel combustion and carbon emissions, thereby contributing to ocean acidification. Thus, in the proposed rule, we created a broad category of activities called ''Activities that lead to global climate change,'' to account for these and other activities that may result in increased carbon emissions and the potential effects resulting from these increased emissions. For this category of activities, we identified ocean acidification as a threat to the water quality, food resources, and settlement habitat PCEs. We mentioned that ocean pH values outside of the normal range (*i.e.,* normal pH range = 7.5 to 8.5) may cause reduced growth and survivorship in abalone and that increasing partial pressure of carbon dioxide may reduce abundance of coralline algae (an important food resource and component of settlement habitat for newly settled abalone) (see Table 1, pg. 59918, in the proposed rule (75 FR 59900; September 28, 2010).

Unlike the other activities listed by the commenter, for which the link to ocean acidification is more indirect (*e.g.,* coastal construction involves fossil fuel combustion and thus increased carbon emissions, which contribute to ocean acidification), NPDES-permitted activities may directly affect the pH of marine waters if permitted discharges alter the pH of receiving waters. Thus, we have revised this final rule and the supporting document to include ocean acidification as a threat to the food resources and water quality PCEs for NPDES-permitted activities.

Comment 10: One commenter provided additional information regarding the potential impacts from dredging on black abalone habitat, stating that dredging activities would not be expected to have direct or indirect impacts on black abalone habitat. The commenter explained that dredging activities would not ordinarily take place within black abalone habitat, because these activities are restricted to navigational channels and features associated with navigation, which consist of subtidal, soft bottom habitats. The commenter also reasoned that indirect effects of dredging activities (*e.g.,* from increased turbidity or deposition) on black abalone habitat were not likely because the distances between dredge sites and black abalone habitat are great enough to avoid such impacts. If necessary, however, the commenter stated that projects can be conditioned to avoid direct impacts and measures can be implemented to control indirect impacts (*e.g.,* closed buckets or turbidity curtains to control turbidity). Finally, the commenter recommended that ''requirements to treat (detoxify) dredge spoil'' be deleted from the list of possible modifications for dredging and disposal activities, because the Clean Water Act prohibits the discharge of sediments toxic to the environment and thus treatment is not a feasible modification.

Response: Consistent with the information provided by the commenter, the draft Economic Analysis Report (NMFS 2010b) recognized that ''most of the dredging projects in California take place in rivers or in bays, to allow for vessels with deep drafts to safely navigate or maneuver. These types of areas are not being considered for designation. Thus, these data indicate that there are currently no dredging and disposal activities occurring in the specific areas.'' The draft and the final Economic Analysis Reports (NMFS 2010b and NMFS 2011b) state that currently, no dredging and disposal activities are known to occur within the specific areas

considered for designation. Therefore, no costs were identified for dredging and disposal activities as a result of the critical habitat designation. The proposed and final rules and supporting documents still include and discuss dredging and disposal activities, however, to inform Federal agencies of the potential effects on black abalone critical habitat if the footprint of the activities were to overlap with rocky habitat within the specific areas.

As the commenter stated, the Clean Water Act, along with the Marine Protection, Research, and Sanctuaries Act of 1972, prohibits the discharge or disposal of dredged material in aquatic and marine waters if the material does not meet Environmental Protection Agency (EPA) and U.S. Army Corps of Engineers (USACE) regulations and standards regarding contaminants. These regulations and the current location, depth, and use of designated ocean disposal sites likely minimize impacts on the water quality PCE for black abalone. As recommended by the commenter, we have revised the possible modifications described for dredging and disposal activities by removing ''requirements to treat (detoxify) dredge spoil'' and replacing it with ''requirements to monitor dredge spoil for specific contaminants that may affect black abalone.'' This revised language is intended to inform Federal agencies that if the disposal of dredge spoil may affect black abalone critical habitat, then they may be required to monitor levels of contaminants within the potentially affected area in order to address impacts on the water quality PCE. The specifics of the monitoring activities (*e.g.,* contaminants of interest, methods, frequency, duration), as well as what actions would be taken if adverse effects on black abalone and its habitat are found, would be determined on a case-by-case basis through the consultation process under section 7 of the ESA.

Comment 11: One commenter stated that the designation of critical habitat for black abalone has the potential to affect the routine issuance of permits for currently permitted activities in the Gulf of the Farallones, Monterey Bay, and Channel Islands National Marine Sanctuaries. The commenter requested that NMFS provide clear, concise advice and guidance on impacts that NMFS believes may affect the species and its critical habitat. The commenter also expressed concern regarding the expected time frame of one year or more for NMFS to issue permits for activities that may impact black abalone, stating that such a time frame would not be consistent with the National Marine Sanctuaries' time frame for evaluating and issuing permits. The commenter requested a formal meeting between staff from NMFS and the National Marine Sanctuaries to establish a framework, protocol, and plan for evaluating activities that may affect black abalone and its critical habitat.

Response: Under section 7 of the ESA, Federal agencies must insure that actions they fund, permit, or carry out are not likely to jeopardize the continued existence of threatened or endangered species, or result in the destruction or adverse modification of designated critical habitat. The proposed rule (75 FR 59900; see section on ''Special Management Considerations or Protection'') and draft Economic Analysis (NMFS 2010b) identified categories of activities that may affect black abalone critical habitat and therefore may be subject to such an analysis under section 7 of the ESA. The proposed rule and draft Economic Analysis also describe the nature of the threats posed by those activities to black abalone habitat and the potential modifications to those activities that may be required to avoid or minimize adverse effects on black abalone critical habitat. That list of activities and their descriptions provide information that can be used to evaluate activities for potential effects on black abalone and its habitat; however, NMFS recognizes that there may be additional activities that we are not aware of at this time that may affect black abalone critical habitat. We understand the commenter's concern regarding the need for guidance on what impacts may or may not affect black abalone and its habitat. However, determining whether a Federal action and its impacts may affect black abalone and its habitat requires an analysis of the details of the action, such as the location, duration, nature, scope, frequency, and time frame of the action and its impacts. Thus, this determination must often be made on a case-by-case basis given the details of each action. NMFS and National Marine Sanctuaries staffs have agreed to coordinate regarding upcoming actions, to provide technical assistance to Federal agencies undertaking, authorizing, or funding an action in determining whether the action may affect black abalone and its habitat. We also clarify that should it be determined that a Federal action may affect black abalone and its habitat, the action would be subject to consultation under section 7 of the ESA. The result of this consultation would not be a permit, but an analysis of whether the Federal agency has insured that the action is not likely to jeopardize black abalone and is not likely to result in the destruction or adverse modification of critical habitat. These consultations would be subject to the time frames specified in section 7 of the ESA and implementing regulations (typically 135 days). Regardless of the critical habitat designation for black abalone, consultations under section 7 of the ESA were and will be required for any Federal action that may affect black abalone or any other species listed under the ESA. The designation of critical habitat for black abalone does not alter the consultation time frames established under the ESA or implementing regulations.

Comment 12: Two commenters stated that the term ''sidecasting'' is vague, undefined, and brings to mind the tossing of material off the highway with no subsequent management of the material. One of the two commenters recommended that the term ''sidecasting'' be replaced with the term ''sediment disposal'' or another term that better represents the range of methods used to dispose of excess sediment. The other commenter recommended that the term ''sidecasting'' be more clearly defined as direct sediment input or deposition into a water body. The commenters provided information explaining that excess sediment generated during road maintenance, repair, and construction activities is disposed of in approved areas and managed to minimize impacts to marine resources, using methods such as compaction of the material followed by revegetation. The commenters also provided information on three existing coastal development permits, stating that the management and disposal of excess sediment under these permits provides for public safety on California Highway 1 and is conducted in such a way as to best mimic nature, in order to minimize detrimental effects to the marine environment.

Response: In response to the comments received, we revised the final rule by removing the term ''sidecasting'' and replacing it with the term ''sediment disposal activities associated with road maintenance, repair, and construction.'' We also revised the description of this activity to clarify that it involves the management and disposal of excess sediments generated from road maintenance, repair, and construction activities, with the material being placed in disposal areas that have been approved by the appropriate authorities and managed using methods (e.g., compaction and revegetation) to minimize the movement of sediment into the marine environment. We clarify

that the sediment disposal activities of concern are those that result in destruction or adverse modification of black abalone habitat (e.g., by increasing sediment input into coastal rocky habitats). If sediment disposal activities may result in the destruction or adverse modification of black abalone critical habitat, then the Federal agency funding, authorizing, or carrying out those activities would be required to consult with NMFS under section 7 of the ESA.

Comment 13: One commenter stated that the potential modification to sidecasting activities of placing excess material at a stable site at a ''safe distance'' from rocky intertidal habitats was too vague. The commenter stated that the ''safe distance'' requirement is subject to interpretation and provides an unacceptable level of uncertainty for materials management on Highway 1.

Response: We acknowledge that the ''safe distance'' requirement is not clearly defined, but also recognize that the critical habitat designation is not the appropriate stage at which to define what that safe distance would be for the placement of sediments to avoid impacts to rocky intertidal and subtidal habitat. The distance at which excess materials would need to be placed to avoid impacts to rocky intertidal and subtidal habitat would depend on several factors, including the volume and characteristics of material to be placed at the site, the time of year, specific features of the site, and what management methods would be used (*e.g.,* compaction, revegetation). These factors may vary and would need to be evaluated on a case-by-case basis during ESA section 7 consultations to determine the appropriate safe distance.

Comment 14: One commenter agreed that the prediction of potential effects from coastal wave energy projects on black abalone populations is highly speculative. The commenter stated that MARINe is planning to monitor changes in physical parameters (*e.g.,* pH, wave intensity, and temperature) in rocky intertidal habitat across the range of black abalone. The commenter stated that these data may provide information on changing physical parameters for black abalone resulting from climate change and coastal tidal and wave energy projects.

Response: We intend to collaborate with MARINe on obtaining data to assess the effects of climate change and coastal tidal and wave energy projects on black abalone habitat.

Comment 15: One commenter asked why agricultural irrigation was identified as an activity that may affect the PCEs on Anacapa Island (Specific area 16), stating that irrigation on Anacapa Island is limited to a greenhouse area and does not run-off the island.

Response: In order to identify and estimate the acreage of irrigated farmland within each specific area, the economic analysis used data on Prime Farmlands, Farmlands of Statewide Importance, and Farmlands of Local Importance from the US Department of Agriculture (USDA) Natural Resources Conservation Service (NRCS) Soil Survey Geographic Database (SSURGO). Based on the SSURGO data, irrigated farmland was identified on Anacapa Island and therefore the proposed rule identified agricultural irrigation as an activity of concern for this specific area in the proposed rule. However, we have since been informed by the National Park Service (NPS) that irrigation activities on Anacapa Island are limited to a greenhouse where native plants are grown for a habitat restoration project (pers. comm. with Dan Richards, CINP, on September 21, 2011). Water use is conservative and limited to occasional hand watering, with water in the greenhouse recaptured and recycled. Based on the new information provided by the NPS, we have determined that agricultural irrigation is not an activity of concern on Anacapa Island and have revised this final rule and the final economic analysis report to remove agricultural irrigation as an activity that may affect the PCEs on Anacapa Island. We also revised the economic analysis to remove the economic impacts associated with agricultural irrigation activities on Anacapa Island (estimated to range from $0 to $21,900, with a midpoint of $10,950). As a result, the total annualized economic impacts estimate across all activities for Anacapa Island decreased.

Unoccupied Areas

Comment 16: One commenter disagreed with NMFS' determination that while the unoccupied specific areas identified for black abalone may be essential for conservation, there is currently insufficient data to conclude that any of the unoccupied areas are essential for conservation. The commenter recommended that any unoccupied areas with favorable black abalone habitat should be designated as critical habitat, particularly unoccupied areas to the north of the species' current range that may provide cooler waters and support for populations forced to shift northward due to ocean warming and the spread of withering syndrome. The commenter stated that any areas that can support black abalone and shelter the species from withering syndrome are essential for conservation of black abalone, regardless of whether they are currently occupied.

Response: In order to designate a presently unoccupied specific area as critical habitat, the Secretary must find that: (a) The occupied specific areas are ''inadequate to ensure the conservation of the species'' (50 CFR 424.12); and (b) the unoccupied specific areas are ''essential for conservation of the species'' (16 U.S.C. 1532). The ESA's definition of critical habitat and its implementing regulations preclude the designation of any unoccupied habitat identified for the species unless the above determinations are made. The CHRT identified three unoccupied specific areas to consider for designation. The three unoccupied specific areas were delineated based on historical black abalone presence data and features of the habitat. At this time, we do not have predictive models or data to determine how climate change may affect current, historical, and potential black abalone habitat and how black abalone populations may respond to these effects, particularly how habitats and biological communities may shift with climate change. Given these uncertainties, we cannot at this time determine whether the unoccupied specific areas delineated by the CHRT would support black abalone populations in the future or whether they are essential for conservation. Nor are we able to conclude that the specific areas within the occupied geographic area are inadequate to ensure the conservation of the species. We note, however, that NMFS will continue to monitor the status of black abalone populations and habitats to determine how the species is responding to conditions over time. The ESA also requires status review updates for ESA-listed species every five years. As more information becomes available in the future, the critical habitat designation may be revised.

Critical Habitat Boundaries

Comment 17: One commenter recommended two revisions to clarify the lateral extent of designated critical habitat and what habitats are designated. First, the commenter recommended that a depth reference be provided wherever depths are given (*e.g.,* a depth of −6m relative to the MLLW line). Second, the commenter recommended that the description of critical habitat be revised to include not just rocky intertidal habitat, but both rocky intertidal and subtidal habitats to a depth of −6m MLLW, because habitat from approximately −1m to −6m

MLLW would not be considered intertidal but is subtidal.

Response: We have made the suggested changes by revising the language in this final rule and in the supporting documents to clarify that the critical habitat designation includes rocky intertidal and subtidal habitats from MHHW to a depth of −6m, measured relative to MLLW.

Comment 18: One commenter recommended that the specific areas proposed for designation should be delineated by latitude and bathymetric specifications (e.g., MHHW), but should not be delineated by longitude. The commenter stated that this would allow the critical habitat designation to continue providing protection to black abalone habitat should the location of that habitat shift due to sea level rise associated with the effects of climate change.

Response: In the proposed rule, we provided latitude and longitude coordinates to define the northern and southern boundaries of each specific area along the California coast. The latitude and longitude coordinates provided were not meant to also define the seaward and shoreward boundaries of the specific areas. We have revised the regulatory text in this final rule to clarify that the latitude and longitude coordinates define the northern and southern boundaries of the designated critical habitat areas, whereas the seaward and shoreward boundaries are defined by the following bathymetric specifications: The MHHW line (shoreward boundary) and the −6m depth contour relative to the MLLW line (seaward boundary).

Economic Impacts Analysis

Comment 19: One commenter stated that the use of a ''mean'' in developing the cost estimates needs to be explained. Specifically, the commenter stated that because the mean reported in the economic analysis is actually the midpoint of a low cost and high cost range, the implicit assumption is that the probable distribution of costs is symmetric (and uniform, if there are no prior expectations to indicate that any value is more likely than any other) between the low and high cost estimates, which is an acceptable assumption as long as the low and high cost estimates are not hugely different. The commenter recommended that the final economic report should state the assumptions made in using the midpoint as the ''mean'' or expected level of costs.

Response: The commenter is correct that the mean reported in the draft Economic Analysis Report (NMFS 2010b) is actually the midpoint of a low cost and high cost estimate. Because the economic analysis for this designation involves analyzing the economic impacts of a regulation that is not yet in place, empirical data are not available to inform the analysis. Instead, the analysis uses the best available data (*e.g.,* from consultations on similar activities or species) to estimate the likely range of economic impacts associated with the critical habitat designation. Lacking empirical data, we made the assumption that the distribution of costs is symmetric and uniform within this range. We then used the midpoint (a measure of central tendency) between the low cost and high cost estimates as the representative cost estimate. In this analysis, the midpoint also represents the ''mean'', based on our assumption of a symmetric and uniform distribution of costs. For clarity, however, we have revised this final rule and the final Economic Analysis Report (NMFS 2011b) to remove the term ''mean'' and replace it with the term ''midpoint.'' The following paragraph was also added to section 1.4.6 in the final Economic Analysis Report (NMFS 2011b) to explain the assumptions made in the economic analysis regarding the ''midpoint'' or ''mid'' annualized economic impact estimate: ''In almost all cases, a range of possible modification costs is presented. Because the data sources for the cost estimates do not constitute a random sample, an average over the range of estimated costs cannot be used as the ''representative'' estimate. This analysis therefore assumes that the endpoints of the range represent the minimum and maximum values of a symmetric cost distribution, and uses the midpoint of the range as the representative cost estimate.''

Comment 20: One commenter recommended that, in light of the recent economic climate, the discount rates used in the economic analysis should be reanalyzed.

Response: OMB Circular A–94 states that a 7 percent discount rate should be used as a base-case for regulatory analysis to approximate the marginal pre-tax rate of return on an average investment in the private sector in recent years (before 1992). OMB Circular A–4 adds that estimates using a 3 percent discount rate should also be provided for regulatory analyses. Thus, the economic analysis provides present discounted values using discount rates of 3 percent and 7 percent. Given the present low interest rate environment, we consider the present values discounted at 3 percent to better reflect current economic conditions. Appendix D of the economic analysis report presents a sensitivity analysis of our assumptions by comparing the present values discounted at 3 percent and 7 percent with those discounted at 2.1 percent.

We also note that in the draft economic analysis report, the annualized impacts were incorrectly labeled as having been discounted at 7 percent within the report and at 3 percent in the sensitivity analysis (Appendix D). The discount rates were only used to calculate present values and were not applied to calculate annualized impacts. In the final economic analysis report, we have removed the text ''discounted at 7 percent'' and ''discounted at 3 percent'' from the tables that present annualized impacts. In addition, we have revised Appendix D to remove the tables of annualized impacts from Appendix D and to include only the table of present discounted values (comparing values discounted at 3, 7, and 2.1 percent discount rates).

Comment 21: One commenter expressed concern that small businesses in the specific areas proposed for designation may experience large economic impacts and recommended that a more detailed economic analysis be conducted to consider the impacts to all types of potentially affected small businesses. The commenter also stated that the proposed rule said that most small businesses are outside of the limited protected area. The commenter felt this statement was speculative and urged NMFS to confirm this statement using county data.

Response: NMFS refers the commenter to the Initial and Final Regulatory Flexibility Analyses in the draft and final Economic Analysis Reports (Appendix E in NMFS 2010b and 2011b). We used U.S. Census Bureau county data and NAICS codes to identify the number of small businesses that may be affected by the critical habitat designation for each activity type. We were not able to analyze the impacts to all types of small businesses, however, because we were able to attribute a NAICS code (or codes) to only 10 of the 17 activities. Thus, we were only able to estimate the number of and economic impacts to small businesses that may be affected for those 10 activities.

Although the proposed rule stated that ''all of the identified small businesses are unlikely to be located in close proximity of the specific areas,'' the economic analysis did incorporate county data and analyzed the impacts to potentially affected small businesses identified throughout the counties

adjacent to the specific areas (see section titled ''Regulatory Flexibility Act'' on pg. 59925 in the proposed rule (75 FR 59900; September 28, 2010)). Thus, the analysis provides a maximum number of small businesses that could be affected for the 10 types of activities analyzed. We could not provide a more precise estimate of the number of potentially affected small entities, because business activity data is maintained at the county level.

Comment 22: One commenter provided additional information for analyzing the economic impacts to ''sidecasting'' activities (revised name: ''Sediment disposal activities associated with road maintenance, repair, and construction; see Response to Comment 12). Specifically, the commenter provided data on the costs associated with sidecasting material versus hauling material off site (the potential modification analyzed in the draft Economic Analysis (NMFS 2010b) for activities conducted under the Waddell Bluffs Talus Disposal project and under the Basin Complex Fire Debris Material Management project.

Response: We have incorporated the information into the final Economic Analysis (NMFS 2011b) for sediment disposal activities associated with road maintenance, repair, and construction.

Comment 23: One commenter recommended that power plants be treated as a special case, as the estimates of the ''mean'' or midpoint cost are highly sensitive to the assumptions made regarding the distribution of costs within the range of estimated costs (see Comment 19 and Response above). The commenter questioned whether the low cost estimate of $26,000 was just as likely as the high cost estimate of $75 million. The commenter stated that the probable distribution of costs between the high and low cost estimates needs to be more explicitly addressed.

Response: The Diablo Canyon Nuclear Power Plant (DCNPP; located in specific area 10) was the only power plant identified within the specific areas that may be affected by the critical habitat designation. As described in the proposed rule and draft economic analysis report, the estimated economic impacts to the DCNPP were highly uncertain. The high cost estimate was based on the costs required to retrofit the DCNPP with closed-system wet cooling towers. The low cost estimate was based on the costs required to comply with temperature control criteria in order to minimize the effects of thermal effluent on the black abalone habitat. In the proposed rule, the estimated economic impacts ranged from $26,500 to approximately $150 million, and we noted that the high cost estimate was likely an overestimate, because there may be less costly and more feasible actions that could be taken to address effects on black abalone habitat. Since the proposed rule, we have obtained additional information from the EPA and California State Water Resources Control Board (SWRCB) that have led us to revise the analysis of economic impacts to the DCNPP. As a result of these revisions, we have concluded that the designation of black abalone critical habitat is not likely to have incremental economic impacts on the DCNPP (*i.e.,* the revised estimated economic impact is zero). In the following paragraphs, we describe the additional information received and the revisions leading to this conclusion.

To address the high level of uncertainty associated with the estimated economic impacts to the DCNPP in our proposed rule, we investigated alternative methods that could feasibly be employed to minimize or eliminate the effects of thermal effluent. We also sought out information from the EPA and the SWRCB to increase certainty regarding baseline protections provided to the habitat under existing regulations. The additional information obtained led us to revise the economic impact analysis for the DCNPP.

Further investigation of potential modifications to DCNPP suggested there is a high degree of uncertainty regarding the economic and technical feasibility of the modifications originally considered. Conclusions regarding several modifications are subject to evaluation studies to be conducted by the DCNPP in cooperation with the SWRCB. The studies are planned for 2012. In the proposed rule, we considered low cost modifications associated with compliance with NPDES permitting requirements (*i.e.,* temperature control criteria), including alterations to plant operations to reduce the intake of water and thus the amount of water discharged. However, additional information provided by the EPA indicated that such modifications are not applicable to the DCNPP. Altering operations to reduce water intake when the facility is not producing power would not work at the DCNPP, because it is a nuclear power plant and needs to take in water for cooling purposes even when the plant is not producing power (pers. comm. with Paul Shriner, EPA, on October 4, 2011). Thus, the low cost modifications analyzed in the proposed rule are considered to be infeasible based on the best available information.

In the proposed rule, we also considered the high cost modification of retrofitting the DCNPP from a once-through cooling system to a closed-cycle cooling system. While this option may address the issue of thermal effluent by reducing the volume of heated water that is discharged, it would not directly address the effects of thermal effluent. Further, a study conducted by the Central Coast Regional Water Quality Control Board (Central Coast RWQCB 2005) concluded that closed-cycle cooling systems would not be feasible for the DCNPP, because the massive physical area required for the cooling towers does not exist near the DCNPP. Although a report prepared for the California Ocean Protection Council (OPC) in 2008 (Tetra Tech Inc. 2008) stated that retrofitting to a closed-cycle cooling system is feasible at the DCNPP, it also noted that the location and layout of existing structures at the DCNPP ''complicates the identification of suitable areas in which to place cooling towers'' and acknowledges that considerations outside the scope of the study may limit the practicality or overall feasibility of a wet cooling tower retrofit at the DCNPP. Hence, the feasibility of a wet cooling tower retrofit at the DCNPP is questionable.

Other options that more directly address the issue of thermal effluent and that would likely be associated with lower costs include the use of helper cooling towers, in which water is cooled prior to discharge, but not re-circulated, thus reducing the costs compared to closed-system cooling towers, and the re-routing of the heated discharge further offshore, rather than discharging directly into Diablo Cove (pers. comm. with Paul Shriner, EPA, on October 4, 2011). The feasibility of installing helper cooling towers has not yet been evaluated, nor will it be considered in the evaluation study planned in 2012. Therefore, the feasibility of this modification remains uncertain. Similar to closed-system wet cooling towers, the use of helper cooling towers may be constrained by limited space in the area around DCNPP, depending on the size of the towers that would need to be constructed. In addition, the Central Coast RWQCB's (2005) study concluded that moving discharge structures offshore is not feasible for the DCNPP, given the bathymetry of the habitat, which is steep, rocky, and rapidly drops off in depth offshore. Therefore, these two potential modifications are considered to be infeasible, based on the best available information.

Based on this additional information, we have determined that neither the low costs (associated with altering power plant operations to reduce water intake and discharge, in compliance with

temperature control criteria) nor the high costs (associated with retrofitting the DCNPP with closed-system wet cooling towers) analyzed in the proposed rule can be reasonably expected to be incurred due to the black abalone critical habitat designation. In addition, we note that regulations under the CWA provide a high level of baseline protection for black abalone critical habitat. The SWRCB has been delegated the authority to implement the federal Clean Water Act (CWA). Section 316(a) of the CWA requires the thermal component of a discharge be limited, taking into account the interaction of this thermal component with other pollutants, to assure the protection and propagation of balanced, indigenous populations of shellfish, fish, and wildlife in the receiving water. California State's Water Quality Control Plan for the control of temperature in coastal waters requires that elevated temperature effluent from existing discharges, such as the DCNPP's discharge, ''shall comply with limitations necessary to assure protection of the beneficial uses and areas of special biological significance.'' Thus, under Section 316(a) of the CWA, the DCNPP would already be required to take measures to address the effects of the facility's discharge on water quality. Based on this information, we determined that it is unlikely that this critical habitat designation would require modifications above and beyond what would already be required under the existing regulations. Therefore, we conclude that this designation is not likely to result in incremental impacts to the cost of operating the DCNPP.

This final rule and the supporting documents have been revised with the economic impact estimate of $0 for the DCNPP. As a result of this revision, the total mid-annualized economic impact estimate for specific area 10 decreased from about $75.5 million to about $456,000 and specific area 10 is no longer eligible for exclusion based on economic impacts (see section on ''Benefits of Exclusion based on Economic Impacts and Final Exclusions'').

Comment 24: One commenter suggested that Table 1.4–1 (summarizing the basis for the incremental scores) of the draft Economic Analysis Report (NMFS 2010b) be revised to clarify that the incremental scores can be affected by other baseline protections, and not just by an overlap with existing critical habitat designations. For example, the commenter noted that the incremental score can be affected by an overlap with other existing protected areas, such as National Marine Sanctuaries (NMS). In addition, the commenter recommended including a table that summarizes the application of the guidelines to each activity and the resulting incremental score(s).

Response: The baseline protections, including NMS regulations, are represented on Table 1.4–1 in the heading ''Existing Federal, state, and local standards and regulations.'' We included additional text in Section 1.4.4 of the final Economic Analysis Report to make this more explicit. In addition, Section 2 of the draft and final Economic Analysis Reports includes a detailed description of the economic analysis for each category of activity considered. Included in these descriptions is an explanation of how the incremental scores were determined for each category of activity. Because the baseline protections differ between specific areas, the incremental scores also differ between specific areas for each category of activity. Rather than creating one table listing the incremental scores for each specific area and each category of activity, we provide summary tables for each category of activity, listing the incremental scores for each specific area and the resulting estimated economic impacts.

Comment 25: One commenter stated that small boat wrecks and associated oil spills may not be captured in the economic analysis, because the analysis focuses on medium to large spill events. The commenter recommended that small boat wrecks should be included in the analysis of oil and chemical spills and vessel grounding incidents because these wrecks can result in the discharge of fuel and in physical damage to habitat. As an example, the commenter stated that in 1995 a 40-foot vessel wrecked at Point Reyes Headland within the area of proposed black abalone critical habitat and discharged 400 gallons of diesel into the marine environment. The commenter stated that the cumulative effects of small incidents could add up to a medium-sized spill, with as many as ten boat wrecks a year occurring at Point Reyes National Seashore. The commenter provided additional data on small boat wrecks and associated oil spills in the Point Reyes National Seashore for the years 1995 through 2005.

Response: In response to this comment, we re-evaluated our analysis of the economic impacts to oil and chemical spill response activities in Section 2.7 of the economic analysis report to incorporate the additional information provided by the NPS on small boat wrecks and associated oil spills in the Point Reyes National Seashore (in Specific Area 2). This re-evaluation led us to revise our approach to the economic analysis for oil and chemical spill response activities. In the draft economic analysis prepared for the proposed rule, we presented a quantitative estimate of the economic impacts to oil and chemical spill response activities. We used a model developed by Etkin (2000) and populated with data from past spill events (*e.g.,* location, spill size, amount of shoreline impacted by oil) to develop a range of cost estimates representing the range in total spill cleanup costs associated with a spill incident in each specific area. Because existing Federal, State, and local standards and regulations associated with oil and chemical spill response activities offer black abalone critical habitat a high level of baseline protection, the draft economic analysis assumed that approximately 20 percent of spill cleanup costs were attributable to black abalone critical habitat. Therefore, the range of cost estimates was adjusted by an incremental score of 0.2, to generate the incremental economic impacts of the designation on oil and chemical spill response activities. This approach was based on the following assumptions: (a) The designation of black abalone critical habitat would likely restrict or modify the type of responses taken in a spill incident; (b) we are able to predict these restrictions or modifications; and (c) these restrictions or modifications would be different from what would already be required if black abalone critical habitat were not designated and thus would result in additional costs, making up 20 percent of the total spill response costs. We also stated that the existence of black abalone critical habitat could increase the number of responses by requiring a response where one was not required before.

In evaluating how to incorporate the new information provided by the NPS on small boat wrecks and associated oil spills, we considered how the designation of critical habitat for black abalone may modify the response to such incidents. We obtained additional information from NOAA regarding spill response activities that led us to re-consider how the critical habitat designation may modify the response to spill incidents. The additional information obtained led us to conclude that there is great uncertainty regarding how the designation may affect spill response activities, because of the unpredictability of incidents, the incident-specific nature of response

strategies, and the baseline protections provided by strategies already in place for other sensitive resources (including black abalone). Historical data show that past spill events often result from vessel groundings or collisions, which are difficult to predict and thus are subject to emergency consultation under section 7 of the ESA. The decision of whether to respond to a spill, as well as how to respond, varies on a case-by-case basis depending on specific factors associated with a spill (*e.g.,* the location, size, type of oil, sea state). In addition, a consultation under section 7 of the ESA can modify a Federal agency's action, but cannot compel an agency to take an action it normally would not take. The existence of black abalone critical habitat in an area may affect spill response activities by prioritizing black abalone critical habitat areas for shoreline protection (*e.g.,* by the use of mechanical recovery methods, deployment of boom, or application of dispersants to keep oil offshore) or requiring shoreline assessments and nearshore water quality monitoring during and after the spill. However, these response activities would likely already be considered or required due to the presence of black abalone and/or other sensitive resources in the area, regardless of the presence of black abalone critical habitat. Thus, the presence of black abalone critical habitat may have little effect on spill response activities. Until more information is available from future spill events and response activities, it is difficult to determine the incremental impacts of this designation on spill response activities. Recognizing these uncertainties, we revised the analysis to a qualitative discussion of the potential impacts on spill response activities. We note that working with the relevant State and Federal agencies on spill response plans may be the most effective way to address our concerns regarding the potential impacts of spill response activities on critical habitat. NMFS plans to work with the U.S. Coast Guard and California's Office of Spill Prevention and Response to incorporate information on black abalone critical habitat into spill response plans and identify strategies to protect this habitat during spill response activities.

We also re-evaluated our analysis of the economic impact to vessel grounding incidents and response activities. The draft economic analysis report had identified only one vessel grounding incident in Specific Area 8. The analysis did not provide a quantitative assessment of the economic impacts to vessel grounding incidents because information was not available regarding the extent of the impacts of the incident on black abalone habitat. Because of this, NMFS was unable to determine specifically how this threat would be alleviated for Specific Area 8. We revised the economic analysis report to include the data provided by the NPS on vessel grounding incidents at Point Reyes National Seashore (in Specific Area 2). However, the additional data did not provide information on the extent of impacts to black abalone critical habitat or on specific ways this threat could be alleviated in the future. Due to uncertainty regarding the extent of impacts and how the activity may be modified to protect black abalone critical habitat, NMFS was still unable to present a quantitative assessment for the potential economic impacts to vessel grounding and response activities.

ESA 4(b)(2) Analysis: Exclusions Based on Economic Impacts

Comment 26: One commenter stated that the economic impacts to the proposed South Orange Coastal Desalination Project in specific area 12 (from Corona Del Mar State Beach to Dana Point in Orange County, California) were overestimated and do not support excluding this specific area. The commenter recommended that the estimated economic costs to the proposed desalination plant for treating hypersaline effluent or for finding an alternate method of brine disposal should not be attributed to the black abalone critical habitat designation, but should be considered baseline costs associated with the listing of the species. The commenter also stated that the estimated costs for an alternate means of brine disposal (*i.e.,* injection wells) should not be applied to the proposed desalination plant because the proposed desalination plant plans to combine the residual brine from desalination with treated wastewater to be discharged 1.5 miles offshore through an existing outfall. The commenter stated that there is no indication that the proposed desalination plant would require injection wells to avoid adversely affecting black abalone critical habitat, because the proposed method of brine disposal would minimize or avoid harm to black abalone critical habitat. The commenter recommended that the estimated economic impacts to the proposed desalination plant in specific area 12 be revised to reflect this new information and that specific area 12 should be designated because it historically supported black abalone and one individual was found there as recently as January 2010.

Response: We agree with the commenter that because the construction and operation of desalination projects require Federal permits, the Federal agency or agencies involved would need to comply with section 7 of the ESA to insure that their actions do not jeopardize the continued existence of black abalone, regardless of the critical habitat designation. If black abalone critical habitat were designated within the action area, however, the Federal agency or agencies would also need to insure that their actions do not result in the destruction or adverse modification of that critical habitat. Thus, some of the costs of treating or disposing of residual brine would be attributed to the listing and would be considered baseline costs, but some of the costs may also be attributed to the critical habitat designation. The economic analysis attempts to estimate the incremental costs of the critical habitat designation by applying an incremental score to the total estimated costs. The incremental score represents the estimated proportion of the costs that can be attributed to the critical habitat designation.

In the draft Economic Analysis Report (NMFS 2010b), we considered a range of costs to desalination plants from low (*i.e.,* minimal or zero costs if the desalination plant is co-located with a power plant in order to mix the residual brine with the power plant's wastewater prior to discharge) to high (*i.e.,* costs to use an alternate method of brine disposal, such as injection wells). The proposed method for brine disposal at the South Orange Coastal Desalination Plant (*i.e.,* combining the residual brine with treated wastewater, to be discharged through an existing outfall at 1.5 miles offshore) is similar to the example provided in the draft Economic Analysis of desalination plants being co-located with power plants. We do not know at this time what the potential effects of the proposed brine disposal method would be on black abalone critical habitat and cannot state with certainty what the potential requirement might be to avoid those effects. However, we agree with the commenter that any modifications required to avoid adversely affecting black abalone critical habitat would likely be less costly than the cost of using injection wells. Thus, the economic costs to the proposed desalination project as a result of the critical habitat designation would likely be at the low end of the range of potential costs (essentially zero, because the low cost estimate could not be quantified). The final economic analysis has been revised to reflect these

changes. Based on this change, the mid-annualized economic impact estimate for specific area 12 was reduced from $1,564,400 (low estimate: $11,500; high estimate: $3,117,300) to $104,400 (low estimate: $11,500; high estimate: $197,300). Despite this reduction in the estimated economic impacts, specific area 12 was still eligible for exclusion based on our decision rule for low conservation value areas (*i.e.,* areas with a low conservation value are eligible for exclusion if the mid-annualized economic impact exceeds $100,000). We did not receive any additional information to support increasing the conservation value rating for this area, or to show that exclusion of this area would significantly impede conservation of black abalone or lead to the extinction of the species. Therefore, we determined that the economic benefits of exclusion outweigh the conservation benefits of designation for specific area 12 and exclude this area from the final designation (for more details, see the section titled ''Benefits of Exclusion and Final Exclusions Based on Economic Impacts'' as well as the final ESA 4(b)(2) Report (NMFS 2011c)).

In addition, after further review of the identified desalination plants for all of the specific areas, we found that a majority of the facilities also plan to mix the residual brine with water from wells or wastewater prior to discharge. Based on this information, we determined that the high cost estimate for the use of injection wells was no longer applicable. Therefore, the analysis of economic impacts to desalination plants was revised to remove the high cost estimate. In the final Economic Analysis Report, the economic impacts to desalination plants are discussed qualitatively, because the low cost estimate could not be quantified.

General Comments

Comment 27: One commenter stated that the proposed rule was incomplete because the list of references and certain references that were stated as available on the Web site (*e.g.,* the supporting documents) were not posted on the Web site. The commenter recommended that all references be made available on the Web site and that web addresses take users directly to the documents cited and not to the NMFS regional Web site. The commenter also requested that the public comment period be extended once the complete list of references is posted, to allow time for review and comment on the entire proposed rule.

Response: The supporting documents cited in the proposed rule were posted and available on the NMFS Southwest Region Web site (*http://swr.nmfs.noaa.gov*) as well as on the Federal eRulemaking Portal Web site (*http://www.regulations.gov*) during the public comment period. The commenter was correct, however, that the list of references was not made available on the Web site during the public comment period. We have since posted the list of references on the NMFS Southwest Region Web site. In response to the commenter's request, we have provided a Web site link in this final rule that takes users directly to the final rule and supporting documents, and have provided more detailed instructions on how to find the final rule and supporting documents on the Federal eRulemaking Portal Web site (see **ADDRESSES** section of this final rule). Although we recognize the commenter's concern regarding the unavailability of the list of references, we did not extend the public comment period due to the need to publish the final rule by the court-approved deadline of October 18, 2011. However, we informed the commenter when the list of references had been posted, and the commenter indicated that they did not have any additional comments on the proposed rule.

Comment 28: One commenter recommended that NMFS undertake a stronger education and outreach approach to publicize the critical habitat designation effort, so that State, Federal, and local municipalities, as well as affected stakeholders, can better understand the requirements for protecting black abalone and its habitat. The commenter suggested that conducting a workshop to explain the critical habitat designation would meet this goal.

Response: We typically do not share specific information about a rule prior to publication of a proposed or final rule, because decisions may change as the agency undergoes deliberations, and sharing information with the public during this deliberative process may create confusion as to the agency's official proposal and decision. However, once a proposed or final rule is published, we publicize the rule widely to ensure that all potentially affected entities and interested members of the public are aware of the proposed or final decisions. NMFS typically publicizes proposed and final rules through press releases, the **Federal Register**, and posting of the rules and supporting documents on the Southwest Region Web site and the Federal eRulemaking Portal Web site. NMFS also holds public hearings when one is requested by the appropriate date during the public comment period (no requests for a public hearing were made for the proposed black abalone critical habitat rule). We would appreciate recommendations for more effectively publicizing the critical habitat designation and helping potentially affected entities understand what the designation means and the requirements for protecting black abalone and its habitat.

Comment 29: In one of the form letters submitted by a supporter of CBD, one commenter stated that there are many species of plants and animals that deserve to be placed on the ESA list, but have been put off. The commenter stated that these creatures need protection before they go extinct.

Response: It is not clear whether the commenter was referring to species that were petitioned for ESA listing but not placed on the ESA list, or whether the commenter was referring in general to all species that may or may not have been considered for ESA listing. It is also not clear whether the commenter was referring to species solely under the jurisdiction of NMFS or to all species in general. Critical habitat designations are for species that are already listed under the ESA and, therefore, this comment is not relevant to the designation of critical habitat for black abalone. However, we note that both the NMFS and USFWS (the Services) follow an established process under section 4 of the ESA for evaluating species for listing. This process is based on the best available scientific and commercial data.

Comment 30: Several commenters provided anecdotal accounts of black abalone presence and abundance in Southern California and the offshore islands. In general, the commenters noted that black abalone were once abundant along the rocky shores of California and the offshore islands, including Catalina Island, and supported recreational and commercial harvest, but that their populations have declined to near extirpation in many areas due to factors including overharvest, illegal harvest, and disease. The commenters voiced support for the critical habitat designation to protect areas for the recovery of black abalone.

Response: The anecdotal information provided by the commenters is consistent with trends observed through long-term monitoring studies of declining black abalone populations throughout the coast and offshore islands of Southern California.

Comment 31: Several commenters expressed concerns regarding overfishing and illegal harvest and the damaging effects of these activities on abalone species as well as coastal areas. One commenter stated that since the 1950s and 1960s, we have lost almost all

abalone due to overexploitation, whether legal or illegal, and ''critical habitat designation and severe enforcement of penalties is becoming necessary to preserve or restore such once-common species as these.'' One commenter noted that abalone are constantly being over-harvested illegally along the coast of Northern California. Another commenter stated that all harvest of black abalone should be banned until the numbers have recovered substantially.

Response: The Status Review Team (SRT) for black abalone identified poaching as a continuing threat (VanBlaricom *et al.* 2009). However, the relative impact of poaching-related mortality to black abalone is poorly understood. The California Department of Fish and Game (CDFG) has documented several black abalone poaching cases from 1993 to 2003 involving removal of tens to hundreds of black abalone across all size categories (unpublished data by Ian Taniguchi, CDFG, cited in VanBlaricom *et al.* 2009). CDFG wardens estimate that 80 percent of seized abalone were returned alive to the wild. Although this critical habitat designation would not directly address the threat of poaching, it can help CDFG wardens and other enforcement officials focus their monitoring efforts on areas important to black abalone.

The SRT also identified historical overfishing as a threat that has contributed to the decline in black abalone populations (VanBlaricom *et al.* 2009). This critical habitat designation would not directly address overfishing. Overfishing of abalone has been addressed by CDFG regulations prohibiting abalone harvest south of San Francisco Bay. Section 9 of the ESA also prohibits the take of black abalone throughout its range, thus prohibiting any harvest of black abalone and adding additional penalties to those already being enforced by the state for illegal harvest of black abalone.

Comment 32: One commenter requested that the recovery plan for black abalone address the threats of climate change as it is associated with withering syndrome and ocean acidification.

Response: NMFS plans to initiate recovery planning for black abalone following publication of this final critical habitat designation. Throughout the recovery planning process, NMFS will assess the threats to black abalone and develop a recovery strategy, with input from stakeholders and the general public. NMFS will likely consider the threats from climate change during the recovery planning process.

Comment 33: Two commenters stated they would like to see black abalone recover to the extent that they could be harvested for consumption again. One of the commenters recommended that upon recovery of black abalone populations, a recreational fishery may be operated at a level to maintain the population by imposing a slot limit to allow harvest of medium-sized abalone, thereby protecting young and older abalone. The commenter stated that black abalone are capable of rapidly repopulating an area if sufficient critical habitat is established and the abalone and their habitat are properly protected.

Response: Harvest of black abalone is prohibited as long as the species is listed as endangered under the ESA. Recovery plans require that certain criteria (*i.e.,* demographic, threats-based, and long-term monitoring criteria) be met in order to down-list or de-list an ESA protected species. These criteria have not yet been established for black abalone, but will be developed in the near future. Upon recovery and delisting of the species, re-establishment of a fishery for black abalone could be considered under the appropriate state and Federal processes. The black abalone SRT stated that the natural recovery of severely-reduced black abalone populations would likely be a slow process due to the low reproductive efficiency of widely dispersed adult populations and short larval dispersal distances (VanBlaricom *et al.* 2009). However, the designation of critical habitat has been found to benefit the status and recovery of ESA-listed species (Harvey *et al.* 2002; Lundquist *et al.* 2002; Taylor *et al.* 2005; Hagen and Hodges 2006).

Comment 34: Numerous commenters submitted form letters in support of the designation of critical habitat for black abalone, specifically to protect black abalone from climate change. The commenters emphasized the importance of curbing climate change and ocean acidification in order to protect critical habitat, because global warming is exacerbating the outbreak and spread of withering syndrome and ocean acidification is threatening abalone growth and reproduction as well as the abundance of juvenile settlement habitat (*i.e.,* coralline algae). Three of the commenters stated that the threats of global warming and climate change should be high items on our national priorities list because of the broad effects on listed species and other aspects of the marine, aquatic, terrestrial, and human environment. One commenter specifically identified the need to control carbon emissions. However, another commenter stated that many members of the public may be concerned about the conservation of abalone and other life forms, but do not subscribe to the global warming hypothesis. Another commenter stated that the actions of people that contribute to destruction of habitat, such as activities that dump poisons in the environment, must be modified.

Response: We recognize the commenters' concerns regarding activities that affect black abalone and its habitat as well as other aspects of the natural and human environment. Once this final critical habitat designation takes effect, section 7 of the ESA requires that Federal agencies insure that their actions are not likely to result in the destruction or adverse modification of black abalone critical habitat. The CHRT identified several categories of activities that may affect the biological and physical habitat features essential for the conservation of black abalone, including NPDES-permitted activities and activities that lead to global climate change. Thus, the protections afforded to black abalone critical habitat under section 7 of the ESA may result in changes to these activities to avoid the destruction or adverse modification of critical habitat. However, the requirements under section 7 of the ESA apply only to actions that have a Federal nexus (*i.e.,* actions funded, permitted, or carried out by a Federal agency or agencies) and may not apply to all actions related to global climate change and habitat destruction. For activities leading to global climate change, it is uncertain at this time how the black abalone critical habitat designation may affect these activities or if a Federal nexus exists for these activities.

Comment 35: One commenter stated that the Minerals Management Service (MMS) has been renamed the Bureau of Ocean Energy Management, Regulation, and Enforcement (BOEMRE) and requested that the final rule and all supporting documents be revised to refer to the current agency name.

Response: We have revised the final rule and supporting documents to refer to BOEMRE instead of the MMS, explaining that BOEMRE was formerly MMS.

Methods and Criteria Used To Identify Critical Habitat

In accordance with section 4(b)(2) of the ESA and our implementing regulations (50 CFR 424.12(a)), this final rule is based on the best scientific and commercial information available concerning the present and historical range, habitat, biology, and threats to habitat for black abalone. In preparing

this rule, we reviewed and summarized current information on black abalone, including recent biological surveys and reports, peer-reviewed literature, the NMFS status review for black abalone (VanBlaricom *et al.,* 2009), and the proposed and final listing rules for black abalone (71 FR 1986, January 11, 2008; 74 FR 1937, January 14, 2009). To assist with the evaluation of critical habitat, we convened a black abalone CHRT, comprised of seven Federal biologists from NMFS, the National Park Service (NPS), US Geological Survey (USGS), the Bureau of Ocean Energy Management, Regulation, and Enforcement (BOEMRE; formerly, Minerals Management Service or MMS), and the Monterey Bay NMS, all with experience in abalone research, monitoring, and management. The CHRT used the best available scientific and commercial data and their best professional judgment to: (1) Verify the geographical area occupied by black abalone at the time of listing; (2) identify the physical and biological features essential to the conservation of the species; (3) identify specific areas within the occupied area containing those essential physical and biological features; (4) verify whether the essential features within each specific area may need special management considerations or protection and identify activities that may affect these essential features; (5) evaluate the conservation value of each specific area; and (6) determine if any unoccupied areas are essential to the conservation of black abalone. Following the close of the public comment period, the CHRT convened to review all of the relevant public comments received, again using the best available information to consider the information and recommendations provided in the comments. The CHRT's evaluation and conclusions are described in detail in the following sections, as well as in the final Biological Report (NMFS 2011a).

Physical or Biological Features Essential for Conservation

Joint NMFS–USFWS regulations, at 50 CFR 424.12(b), state that in determining what areas are critical habitat, the agencies ''shall consider those physical and biological features that are essential to the conservation of a given species and that may require special management considerations or protection.'' Features to consider may include, but are not limited to: ''(1) Space for individual and population growth, and for normal behavior; (2) Food, water, air, light, minerals, or other nutritional or physiological requirements; (3) Cover or shelter; (4) Sites for breeding, reproduction, rearing of offspring, germination, or seed dispersal; and generally; (5) Habitats that are protected from disturbance or are representative of the historic geographical and ecological distributions of a species.'' The regulations also require the agencies to ''focus on the principal biological or physical constituent elements'' (hereafter referred to as ''Primary Constituent Elements'' or PCEs) within the specific areas considered for designation that are essential to conservation of the species, which ''may include, but are not limited to, the following: * * * spawning sites, feeding sites, seasonal wetland or dryland, water quality or quantity, * * * geological formation, vegetation type, tide, and specific soil types.''

Based on the best available scientific information, the CHRT identified the following PCEs essential for the conservation of black abalone:

(1) *Rocky substrate.* Suitable rocky substrate includes rocky benches formed from consolidated rock of various geological origins (*e.g.,* igneous, metamorphic, and sedimentary) that contain channels with macro- and micro- crevices or large boulders (greater than or equal to 1 m in diameter) and occur from MHHW to a depth of −6 m relative to MLLW. All types of relief (high, medium and low; 0.5 to greater than 2 m vertical relief; Wentworth 1922) support black abalone and complex configurations of rock surfaces likely afford protection from predators, direct impacts of breaking waves, wave-born projectiles, and excessive solar heating during daytime low tides. Black abalone typically occupy the middle intertidal zones, although in some areas black abalone may predominately occupy the high or low intertidal zones. Local variation exists, depending on conditions such as the level of exposure and where drift kelp (an important food resource for black abalone) may be accumulating at particular locations. Leighton (1959) found evidence for ontogenetic shifts in depth distribution among juvenile abalone on the Palos Verdes Peninsula. Juvenile black abalone (10–30 mm) were found at mid-intertidal depths on undersides of rock providing clear beneath-rock open space while juveniles in the 5–10 mm size range were found at higher intertidal zones in narrow crevices and in depressions abraded into rock surfaces by the intertidal chiton, *Nutallina californica* (Reeve 1847). Black abalone observed at greater depths (3–6 m) typically were mature adults. California contains approximately 848.5 miles (1365.5 km) of consolidated rocky coastline, and 548.5 miles (882.8 km) or 65 percent of it falls within the areas considered in this critical habitat designation.

(2) *Food resources.* Abundant food resources including bacterial and diatom films, crustose coralline algae, and a source of detrital macroalgae, are required for growth and survival of all stages of black abalone. From post-larval metamorphosis to a size of about 20 mm, black abalone consume microbial and possibly diatom films (Leighton 1959; Leighton and Boolootian 1963; Bergen 1971) and crustose coralline algae. At roughly 20 mm black abalone begin feeding on both attached macrophytes and pieces of drift plants cast into the intertidal zone by waves and currents. The primary macroalgae consumed by juvenile and adult black abalone are giant kelp (*Macrocystis pyrifera)* and feather boa kelp (*Egregia menziesii)* in southern California (i.e., south of Point Conception) habitats, and bull kelp (*Nereocystis leutkeana)* in central and northern California habitats (i.e., north of Santa Cruz), although *Macrocystis* and *Egregia* may be more prominent than *Nereocystis* in central California habitats between Point Conception and Santa Cruz (public comment submitted by MARINe). Southern sea palm (*Eisenia arborea),* elk kelp (*Pelagophycus porra),* stalked kelp (*Pterygophora californica),* and other brown kelps (*Laminaria sp.)* may also be consumed by black abalone.

(3) *Juvenile settlement habitat.* Rocky intertidal and subtidal habitat containing crustose coralline algae and crevices or cryptic biogenic structures (*e.g.,* urchins, mussels, chiton holes, conspecifics, anemones) is important for successful larval recruitment and juvenile growth and survival of black abalone less than approximately 25 mm shell length. The presence of adult abalone may facilitate larval settlement and metamorphosis, because adults may: (1) Promote the maintenance of substantial substratum cover by crustose coralline algae by grazing other algal species that could compete with crustose coralline algae; and/or (2) outcompete encrusting sessile invertebrates (*e.g.* tube worms and tube snails) for space on rocky substrates, thereby promoting the growth of crustose coralline algae and settlement of larvae; and/or (3) emit chemical cues necessary to induce larval settlement (Miner *et al.* 2006; Toonen and Pawlick 1994). Increasing partial pressure of CO_2 may decrease calcification rates of coralline algae, thereby reducing their abundance and ultimately affecting the survival of newly settled black abalone (Feely *et al.* 2004; Hall-Spencer *et al.*

2008). Laboratory experiments have shown that the presence of pesticides (*e.g.,* dichlorodiphenyltrichloroethane (DDT), 2,4-dichlorophenoxyacetic acid (2,4-D), methoxychlor, dieldrin) interfered with larval settlement of abalone, because the chemical cues emitted by coralline algae and its associated diatom films, which trigger abalone settlement, are blocked (Morse *et al.* 1979). The pesticide oxadiazon was found to severely reduce algal growth (Silver and Riley 2001). During the public comment period on the proposed rule, we solicited the public for additional information regarding processes that mediate crustose coralline algal abundance, however, we did not receive any additional information and data are still lacking regarding what other factors may be controlling crustose coralline algal abundance.

(4) *Suitable water quality.* Suitable water quality includes temperature, salinity, pH, and other chemical characteristics necessary for normal settlement, growth, behavior, and viability of black abalone. The biogeographical water temperature range of black abalone is from 12 to 25 °C, but they are most abundant in areas where the water temperature ranges from 18 to 22 °C (Hines *et al.* 1980). There is increased mortality due to withering syndrome (WS) during periods following elevated sea surface temperature (Raimondi *et al.* 2002). The CHRT did not consider the presence of the bacteria that causes WS when evaluating the condition of this PCE because it is thought to be present throughout a large portion of the species' current range (greater than 60 percent), including all coastal specific areas as far north as San Mateo County, as well as at Bodega Head (though not found in a sample collected from Point Reyes in 2009) and the Farallon Islands (pers. comm. with Jim Moore, CDFG, on June 8, 2011). Instead the CHRT relied on sea surface temperature information to evaluate water quality in terms of disease virulence, recognizing that elevated sea surface temperatures are correlated with increased rates of WS transmission and manifestation in abalone. Elevated levels of contaminants (*e.g.,* copper, oil, polycyclic aromatic hydrocarbon (PAH) endocrine disrupters, persistent organic compounds (POC)) can cause mortality of black abalone. In 1975, toxic levels of copper in the cooling water effluent of a nuclear power plant near Diablo Canyon, California, were associated with abalone mortalities in a nearshore cove that received significant effluent flows (Shepherd and Breen 1992; Martin *et al.* 1977). As mentioned above for the *Juvenile settlement habitat* PCE, laboratory experiments have shown that the presence of some pesticides interfere with larval settlement of abalone (Morse *et al.* 1979) and can severely reduce algal growth (Silver and Riley 2001). The suitable salinity range for black abalone is from 30 to 35 parts per thousand (ppt), and the suitable pH range is 7.5–8.5. Ocean pH values that are outside of the normal range for seawater (i.e., pH less than 7.5 or greater than 8.5; *http://www.marinebio.net/marinescience/02ocean/swcomposition.htm*) may cause reduced growth and survivorship in abalone as has been observed in other marine gastropods (Shirayama and Thornton 2005). Specifically, with increasing uptake of atmospheric CO_2 by the ocean, the pH of seawater becomes more acidic, which may decrease calcification rates in marine organisms and result in negative impacts to black abalone in at least two ways: (1) By disrupting an abalone's ability to maintain and grow its protective shell; and/or (2) by reducing abundance of coralline algae (and associated diatom films and bacteria), which may mediate larval settlement through chemical cues and support and provide food sources for newly settled abalone (Feely *et al.* 2004; Hall-Spencer *et al.* 2008).

(5) *Suitable nearshore circulation patterns.* Suitable circulation patterns are those that retain eggs, sperm, fertilized eggs, and ready-to-settle larvae enough so that successful fertilization and settlement to suitable habitat can take place. Nearshore circulation patterns are controlled by a variety of factors including wind speed and direction, current speed and direction, tidal fluctuation, geomorphology of the coastline, and bathymetry of subtidal habitats adjacent to the coastline. Anthropogenic activities may also have the capacity to influence nearshore circulation patterns (*e.g.,* intake pipes, sand replenishment, dredging, in water construction, etc.). These factors, in combination with the early life history dynamics of black abalone, may influence retention or dispersal rates of eggs, sperm, fertilized eggs, and ready-to-settle larvae (Siegel *et al.* 2008). Forces that disperse larvae offshore (*i.e.,* by distances on the order of greater than tens of kilometers) may decrease the likelihood that abalone larvae will successfully settle to suitable habitats, given that: (a) Black abalone gamete and larval durations are relatively short; (b) larvae have little control over their position in the water column; and (c) ready-to-settle larvae require shallow, intertidal habitat for settlement. However, retention of larvae inshore due to bottom friction and minimal advective flows near kelp beds (the ''sticky water'' phenomenon; Wolanski and Spagnol 2000; Zeidberg and Hamner 2002) may increase the likelihood that larvae will successfully settle to suitable habitats.

Geographical Area Occupied by the Species and Specific Areas Within the Geographical Area Occupied

One of the first steps in the critical habitat designation process is to define the geographical area occupied by the species at the time of listing and to identify specific areas, within this geographically occupied area, that contain at least one PCE that may require special management considerations or protection. In the January 2009 final ESA listing rule, the range of black abalone was defined to extend from Crescent City (Del Norte County, California) to Cape San Lucas, Baja California, Mexico, including all offshore islands. The northern and southern extent of the range was determined based on museum specimens collected more than 10 years prior to the listing of the species (Geiger 2004). Because this range was based on dated records, and because we cannot designate critical habitat in areas outside of the United States (see 50 CFR 424.12(h)), the CHRT reconsidered the scope of the current (i.e., at the time of the final ESA listing) occupied range of black abalone. The CHRT examined data from ongoing monitoring studies along the California coast (Neuman *et al.* 2010) and literature references to determine that, within the United States, the geographical area currently occupied by black abalone extends from the Del Mar Landing Ecological Reserve in Sonoma County, California, to Dana Point, Orange County, California, on the mainland and includes the Farallon Islands, Año Nuevo Island, and all of the California Channel Islands. The CHRT noted that there are pockets of unoccupied habitat within this broader area of occupation (NMFS 2011a). Within this geographically occupied area, black abalone typically inhabit coastal and offshore island rocky intertidal and subtidal habitats from MHHW to depths of −6 m (relative to MLLW) (Leighton, 2005). The CHRT then identified ''specific areas'' within the geographical area occupied by the species that may be eligible for designation as critical habitat under the ESA. For an occupied specific area to be eligible for designation it must contain at least one PCE that may require special

management considerations or protection. For each occupied specific area, the CHRT reviewed the available data regarding black abalone presence and verified that each area contained one or more PCE(s) that may require special management considerations or protection. The CHRT determined that for all specific areas, unless otherwise noted, MHHW delineates the landward boundary, and the −6 m (relative to MLLW) bathymetric contour delineates the seaward boundary. The CHRT also agreed to consider naturally occurring geomorphological formations and size (i.e., area) to delineate the northern and southern boundaries of the specific areas. The CHRT intentionally aimed to delineate specific areas of similar sizes in order to minimize biases in the economic cost estimates for the specific areas.

The CHRT scored and rated the relative conservation value of each occupied specific area. Areas rated as ''High'' were deemed to have a high likelihood of promoting the conservation of the species. Areas rated as ''Medium'' or ''Low'' were deemed to have a moderate or low likelihood of promoting the conservation of the species, respectively. The CHRT considered several factors in assigning the conservation value ratings, including the PCEs present, the condition of the PCEs, and the historical, present, and potential future use of the specific area by black abalone. These factors were scored by the CHRT and summed to generate a total score for each specific area, which was considered in the CHRT's evaluation and assignment of the final conservation value ratings. The final Biological Report (NMFS 2011a; available via our Web site at *http://swr.nmfs.noaa.gov,* via the Federal eRulemaking Web site at *http://www.regulations.gov,* or upon request—see **ADDRESSES**) describes in detail the methods used by the CHRT in their assessment of the specific areas and provides the biological information supporting the CHRT's assessment as well as the final conservation value ratings and justifications. The following paragraphs provide a brief description of the presence and distribution of black abalone within each specific area, additional detail regarding the CHRT's methods for delineating the specific areas, and the justification for assigning conservation scores. The following paragraphs also provide a brief description of the activities within each specific area that may threaten the quality of the PCEs, which are discussed in more detail in the *Special Management Considerations or Protection* section below and in the final Economic Report (NMFS 2011b). Activities that exacerbate global climate change (most notably fossil fuel combustion, which contributes to an increase in atmospheric CO_2 levels and the indirect outcomes of sea level rise, sea surface temperature elevation, and ocean acidification) were identified as a concern for all of the specific areas. The Black Abalone Critical Habitat Designation maps (in the regulatory text section), as well as the final Biological Report (NMFS 2011a), show the location of each specific area considered for designation.

Specific Area 1. Specific Area 1 includes the rocky intertidal and subtidal habitats from the Del Mar Landing Ecological Reserve to Bodega Head in Sonoma County, CA. Bodega Head is a small peninsula that creates a natural barrier between it and the coastline that lies to the east and south. In addition, the geological origin of Bodega Head differs from that of the coastline to the east and south of it. For these reasons, this location was chosen to delineate the southern boundary of Specific Area 1. The CHRT scored the conservation value of this area as ''High,'' because, although the best available data indicate that black abalone are rare in this area, the area may serve as a refuge from WS and contains high quality habitat that can support large numbers of black abalone. Based on the limited historical data available for this area (Geiger 2003; State Water Resources Control Board (SWRCB)1979a; pers. comm. with J. Sones, Bodega Marine Reserve (BMR), University of California Davis, on January 7, 2010), black abalone were encountered occasionally in some locations. Black abalone have been present in this area in low numbers since the Partnership for Interdisciplinary Studies of Coastal Oceans (PISCO) and UCSC began its long-term intertidal sampling program in the early 2000s. Black abalone are currently considered to be rare (*i.e.,* difficult to find with some search effort and rarely seen at sampling sites; pers. comm. with J. Sones, BMR, on January 7, 2010). The CHRT expressed uncertainty regarding the area's ability to support early life stages of black abalone because historical and current data are lacking. However, the presence of good to excellent quality rocky substrate (*e.g.,* 87 percent of rocky substrate available is consolidated), food resources, and water quality (SWRCB 1979a) and fair to good settlement habitat led the CHRT to conclude that the area could support a larger black abalone population comprised of multiple size classes. There are several activities occurring within this area that may threaten the quality of the PCEs including waste-water discharge, agricultural pesticide application and irrigation, construction and operation of tidal and wave energy projects, and activities that exacerbate global climate change (*e.g.,* fossil fuel combustion). This area is at the limit of the species' northern range, which may explain the rarity of black abalone here. However, it is also one of the few areas along the California coast that has not yet been affected by WS and serves as a refuge from the disease. In addition, the CHRT was of the opinion that, should the population shift northward along the coast with predicted increases in sea surface temperatures, this area would provide suitable habitat to support large densities of black abalone.

Specific Area 2. Specific Area 2 includes rocky intertidal and subtidal habitats from Bodega Head in Sonoma County, CA, to Point Bonita in Marin County, CA. Point Bonita was chosen to delineate the southern boundary of this specific area because it sits at the southern point of the Marin Headlands, the final promontory encountered as one moves south along the coast before reaching the entrance to San Francisco Bay. The CHRT scored the conservation value of this area as ''High,'' because, although black abalone are considered rare in this area, the area may serve as a refuge from WS and contains high quality habitat that can support large numbers of black abalone. Historical presence of black abalone within this area is limited, but in locations where black abalone were observed, they were considered rare (Light 1941; SWRCB 1980a and 1980b; pers. comm. with S. Allen, Point Reyes National Seashore, on January 6, 2010). Since the mid-2000s, Point Reyes National Seashore and Golden Gate National Recreation Area staff have observed black abalone at several locations, but their qualitative abundance is considered to be rare (see definition of rare above). This was confirmed in 2010 through surveys conducted by PISCO, NMFS, and UCSC. This area contains good to excellent quality consolidated rocky substrate (*e.g.,* 71 percent of rocky substrate available is consolidated), food resources, and water quality, and fair to good settlement habitat. There are several activities occurring within this area that may threaten the quality of the PCEs, including: Sand replenishment, waste-water discharge, coastal development, non-native species introduction and management, activities

that exacerbate global climate change, and agricultural pesticide application and irrigation. This area is near the limit of the species' northern range, which may explain the rarity of black abalone here, but it is also one of the few areas along the California coast that has not yet been affected by WS. The CHRT was of the opinion that the area could support greater densities and multiple size classes of black abalone in the future if habitat changes (*e.g.,* sea surface temperature rise) cause black abalone populations to shift northward along the coast.

Specific Area 3. Specific Area 3 includes the rocky intertidal and subtidal habitats surrounding the Farallon Islands, San Francisco County, CA. This area is a group of islands and rocks found in the Gulf of the Farallones, 27 miles (43 km) west of the entrance to San Francisco Bay and 20 miles (32 km) south of Point Reyes. The islands are a National Wildlife Refuge and are currently managed by the USFWS, in conjunction with the Point Reyes Bird Observatory Conservation Science. The waters surrounding the islands are part of the Gulf of the Farallones NMS. The CHRT scored the conservation value of this area as ''Medium,'' because the area contains high quality habitat to support black abalone populations and has not yet been affected by WS. Historical presence of black abalone in intertidal habitats surrounding the Farallon Islands was noted in the late 1970s (SWRCB 1979c) and again in the early 1990s (E. Ueber, NPS (retired), unpublished data). Black abalone have been observed in Specific Area 3 during limited surveys conducted since 2005 (pers. comm. with Jan Roletto, Gulf of the Farallones NMS, on February 27, 2010). Researchers have confirmed that all of the PCEs are present and of good to excellent quality, and adverse impacts due to anthropogenic activities on these isolated islands are relatively low. However, the CHRT expressed concern over the following activities that may affect habitat features important for black abalone conservation and recovery, including: Waste-water discharge, agricultural pesticide application and irrigation, non-native species introduction and management, oil and chemical spills and clean-up, and activities that exacerbate global climate change.

Specific Area 4. Specific Area 4 extends from the land mass framing the southern entrance to San Francisco Bay to Moss Beach, San Mateo County, CA, and includes all rocky intertidal and subtidal habitats within this area. The CHRT scored the conservation value of this area as ''Medium,'' because, although black abalone are present in the area, the habitat is of lower quality compared to the specific areas to the north due to an abundance of sand and steep and narrow habitats that are not likely to support black abalone. There is limited historical and current information regarding black abalone occurrence and abundance along this stretch of the coast. At the one site where black abalone were noted historically, they were considered to be rare (Light 1941). PISCO and UCSC researchers found ten individuals within this specific area during limited surveys conducted since 2007. The CHRT considered the PCEs within the area to be of fair to good quality. While the CHRT was uncertain about this area's ability to support early life stages because data are lacking, it was more confident that the area can support the long-term survival of juveniles and adults based on several lines of evidence from historical records (Light 1941; pers. comm. with J. Sones, BMR, on January 7, 2010; pers. comm. with M. Miner, UCSC, on February 11–12, 2010). The CHRT noted that the following activities may threaten the quality of the PCEs within this specific area: Sand replenishment, waste-water discharge, coastal development, agricultural pesticide application and irrigation, non-native species introduction and management, oil and chemical spills and clean-up, and activities that exacerbate global climate change.

Specific Area 5. Specific Area 5 includes rocky intertidal and subtidal habitats from Moss Beach to Pescadero State Beach, San Mateo County, CA. This area was considered separately from Specific Area 4, even though each area alone is smaller in size compared to the majority of the other specific areas and both Specific Areas 4 and 5 were given a conservation value of ''Medium.'' The reasons for separate consideration were that: (1) The CHRT team viewed the PCEs in Specific Area 5 as being of lower quality overall than those contained within Specific Area 4; and (2) the level of certainty the CHRT had in evaluating the conservation value of Specific Area 4 was higher than that for Specific Area 5. The CHRT scored the conservation value of this area as ''Medium,'' recognizing that all of the PCEs were present in the area and their current quality ranged from poor to good. The CHRT also recognized that this area lies to the north of areas that have experienced population declines, and thus the habitat in this area may still provide a refuge from the devastating effects of WS. The CHRT expressed a high degree of uncertainty regarding the area's ability to support early life stages and long-term survival of juveniles and adults, however, because limited surveys have only been conducted (by Point Reyes National Seashore and Golden Gate National Recreation Area researchers as well as by PISCO, NMFS, and UCSC) in the area since the species was listed in 2009 and only one black abalone was found during these surveys. Waste-water discharge, oil and chemical spills and clean-up, and activities that exacerbate global climate change may compromise the quality of the PCEs within this specific area.

Specific Area 6. Specific Area 6 includes the rocky intertidal and subtidal habitats surrounding Año Nuevo Island, San Mateo County, CA. The island lies 50 miles (74 km) south of San Francisco Bay and, 200 years ago, it was connected to the mainland by a narrow peninsula. Today it is separated from the mainland by a channel that grows wider with each winter storm. Año Nuevo Island is managed by the UCSC Long Marine Laboratory under an agreement with the California Department of Parks and Recreation. The Año Nuevo Island Reserve, including the island and surrounding waters, comprises approximately 25 of the 4,000 acres (10 of 1,600 ha) of the Año Nuevo State Reserve, the rest of which is on the mainland opposite the island. The CHRT scored the conservation value of this area as ''High,'' because the area contains good habitat to support black abalone and, although surveys have not been conducted in this area since the mid-1990s, historical data indicate the area supported high densities of black abalone. Black abalone were common in intertidal habitats surrounding the island during surveys conducted from 1987–1995, with mean densities ranging from 6–8 per m^2 (Tissot 2007; VanBlaricom *et al.* 2009). PISCO and UCSC reestablished monitoring on Año Nuevo Island in 2010. In a limited search of one of the areas previously sampled by Tissot, approximately 50 black abalone (individuals ranged between 60–180mm in size) were found. The CHRT verified that good to excellent quality rocky substrate, food resources, and water quality, and fair to good settlement habitat exist at Año Nuevo Island, but expressed uncertainty regarding whether the area currently supports early life stages and long-term survival of juveniles and adults. The impact of global climate change on the habitat features important to black

abalone was the concern identified within this specific area.

Specific Area 7. Specific Area 7 includes the rocky intertidal and subtidal habitats from Pescadero State Beach, San Mateo County, CA, to Natural Bridges State Beach, Santa Cruz County, CA. Situated to the north of Monterey Bay, Natural Bridges State Beach marks the last stretch of rocky intertidal habitat before reaching the primarily fine-to medium-grained sand beaches of Monterey Bay (*http://www.sanctuarysimon.org/monterey/sections/beaches/b_overview_map.php*). The CHRT scored the conservation value of this area as ''High,'' because the area contains good to excellent quality habitat that historically supported and currently supports recruitment and juvenile and adult survival. Historical data are limited, but the information available suggests that black abalone were common at a couple of sites within this specific area in the late 1970s and early 1980s and rare at the majority of sites (unpublished data available online at: *http://www.sanctuarysimon.org/monterey/sections/rockyShores/project_info.php?projectID=100281&sec=rs (accessed June 7, 2011)*). PISCO and UCSC began intertidal black abalone surveys in this area in 1999 and, at that time, qualitative abundance ranged from rare to common, depending on the specific site. Sampling by PISCO, the MBNMS, Sea Grant, and UCSC within the last 6 years indicates that black abalone are present and common at about 50 percent of the sites within this area, but that abundance may be declining at a few of these sites. At the other sites, black abalone are either present, but rare, or completely absent. The CHRT confirmed that all of the PCEs are present and of good to excellent quality here. PISCO data (Raimondi *et al.* 2002; Tissot 2007) provide evidence that the area supports early life stages (i.e., small individuals (< 30mm) are present currently; see definition in NMFS 2011a) and long-term survival of juveniles and adults (i.e., there is stable or increasing abundance, and multiple size classes of black abalone evident in length-frequency distributions; see definition in NMFS 2011a). The CHRT identified the following activities that may threaten the quality of habitat features essential to black abalone within this area: Sand replenishment, waste-water discharge, coastal development, sediment disposal activities (associated with road maintenance, repair, and construction), agricultural pesticide application and irrigation, oil and chemical spills and clean-up, construction and operation of desalination plants, vessel grounding incidents and response, non-native species introduction and management, kelp harvesting, and activities that exacerbate global climate change.

Specific Area 8. Specific Area 8 includes rocky intertidal and subtidal habitats from Pacific Grove to Prewitt Creek, Monterey County, CA. Pacific Grove marks the first stretch of rocky intertidal habitat to the south of the fine-to medium-grained sand beaches of Monterey Bay (*http://www.sanctuarysimon.org/monterey/sections/beaches/b_overview_map.php*). The CHRT scored the conservation value of this area as ''High,'' because the area contains high quality habitat that has historically supported and currently supports black abalone recruitment and juvenile and adult survival. Surveys conducted prior to 2004 indicated that black abalone encompassing a range of sizes were present and common at all of the sampled sites within this area (SWRCB1979b and 1979d; Raimondi *et al.* 2002; Tissot 2007). More recent information gathered within the last 6 years by PISCO, MBNMS, Sea Grant, and UCSC indicates that black abalone encompassing a range of sizes remain at all sites sampled and are considered common at 93 percent of the sites. The CHRT confirmed that all of the PCEs are present and of good to excellent quality, but may be threatened by waste-water discharge, coastal development, agricultural pesticide application and irrigation, oil and chemical spills and clean-up, construction and operation of desalination plants, kelp harvesting, and activities that exacerbate global climate change. PISCO data (Raimondi *et al.* 2002; Tissot 2007) provide evidence that the area supports early life stages and long-term survival of juveniles and adults (see NMFS 2011a for details).

Specific Area 9. Specific Area 9 includes rocky intertidal and subtidal habitats from Prewitt Creek, Monterey County, CA, to Cayucos, San Luis Obispo County, CA. Situated on the northern edge of Estero Bay, Cayucos marks the last stretch of rocky intertidal habitat before reaching the primarily fine-to medium-grained sand beaches of Estero Bay. The CHRT scored the conservation value of this area as ''High,'' because the area contains high quality habitat that has historically supported and currently supports black abalone recruitment and juvenile and adult survival. BOEMRE, MBNMS, PISCO, Sea Grant, and UCSC established long-term monitoring sites within this area between 1995 and 2008. Surveys conducted prior to 2004 indicated that black abalone of a range of sizes were present and common at all but one of the sites surveyed within this area (Raimondi *et al.* 2002; Tissot 2007). More recent information gathered by PISCO and UCSC indicates that black abalone of a range of sizes are present at all sites within the area and are commonly found at 57 percent of the sites, occasionally found with some search effort at 14 percent of the sites, and rarely found at 29 percent of the sites. The CHRT confirmed that all of the PCEs are present and of good to excellent quality. The area supports early life stages and long-term survival of juveniles and adults (see NMFS 2011a for details). However, the CHRT also noted that PISCO researchers have reported recent population declines at 57 percent of the sites sampled within this area and in at least one site, the population decline has been severe. Activities that may threaten the habitat features important for black abalone conservation are: waste-water discharge, agricultural pesticide application and irrigation, oil and chemical spills and clean-up, construction and operation of desalination plants, kelp harvesting, and activities that exacerbate global climate change.

Specific Area 10. Specific Area 10 includes rocky intertidal and subtidal habitats from Montaña de Oro State Park in San Luis Obispo County, CA, to just south of Government Point, Santa Barbara County, CA. Montaña de Oro State Park is the first stretch of rocky intertidal habitat encountered to the south of the sandy beaches of Estero Bay, thus it was chosen to delineate the northern boundary of this specific area. The southern boundary of this area, Government Point, is where the Santa Barbara Channel meets the Pacific Ocean, the mostly north-south trending portion of coast transitions to a mostly east-west trending part of the coast, and a natural division between Southern and Central California occurs. For these reasons, it was chosen as the southern boundary of this specific area. The CHRT scored the conservation value of this area as ''High,'' because the area contains good habitat to support black abalone populations. However, declines in black abalone populations have occurred at some survey sites due to WS, resulting in changes to the habitat in the absence of black abalone. Historical data indicates that black abalone were present at 100 percent of the sites sampled within this specific area and that they were considered to be common at a majority of the sites sampled (Raimondi *et al.* 2002; Tissot 2007). BOEMRE and University of California Santa Barbara (UCSB)

established long-term monitoring sites within this area in 1991, which have been biannually monitored to the present, and are currently monitored by BOEMRE and UCSC. PISCO and BOEMRE added biodiversity sites (sites established under the Coastal Biodiversity Survey to measure diversity and abundance of algal and invertebrate communities living on the rocky intertidal; *http://cbsurveys.ucsc.edu/*) in 2001, which are currently monitored periodically by PISCO and UCSC+. Since 2005, population declines have been noted at most locations within this specific area, with local extinction occurring in at least one sampling site. Despite declines in abundance and lack of evidence of recent recruitment in this specific area, the CHRT confirmed that the PCEs range from fair to excellent quality along this stretch of the California coast. The CHRT identified several activities that may threaten the quality of the PCEs within this specific area, including: In-water construction, waste-water discharge, coastal development, agricultural pesticide application and irrigation, construction and operation of power generating and desalination plants, mineral and petroleum exploration and extraction, non-native species introduction and management, kelp harvesting and activities that exacerbate global climate change.

Specific Area 11. Specific Area 11 includes rocky intertidal and subtidal habitats surrounding the Palos Verdes Peninsula and extends from the Palos Verdes/Torrance border to Los Angeles Harbor in southwestern Los Angeles County, CA. This small peninsula is one of only two areas within Santa Monica Bay that contain intertidal and subtidal rocky substrate suitable for supporting black abalone. The limited extent of rocky intertidal habitat is what defines the northern and southern boundaries of this specific area. The CHRT scored the conservation value of this area as ''Medium.'' Currently, there is no evidence that this area supports recruitment, and, given the extremely low numbers of juveniles and adults, it is suspected that the area does not support long-term persistence of this population (Miller and Lawrenz-Miller 1993; pers. comm. with J. Kalman, Cabrillo Marine Aquarium (CMA), on February 12, 2010; pers. comm. with B. Allen, California State University Long Beach (CSULB), on February 5, 2010). However, many of the habitat features important to black abalone are still present and are in fair to excellent condition, which led to the CHRT's conclusion that this area is of ''Medium'' conservation value. Long-term intertidal monitoring on the Peninsula conducted by the CSULB and the CMA began in 1975, and, at that time, densities ranged from 2 to 7 per m^2. Densities declined throughout the 1980s, and by the 1990s black abalone were locally extinct at a majority of sampling sites within the area. Good to high quality rocky substrate and food resources and fair to good settlement habitat persist within this area. The CHRT recognized that water quality within this area is in poor condition. Unlike the majority of the other areas where significant declines in black abalone abundance have occurred recently (since the 1980s) due to WS, declines in this area occurred prior to the onset of WS and have been attributed to the combined effects of significant El Niño events and poor water quality resulting from large-volume domestic sewage discharge by Los Angeles County during the 1950s and 1960s (Leighton 1959; Cox 1962; Young 1964; Miller and Lawrenz-Miller 1993). From the mid-1970s to 1997, however, improved wastewater treatment processes resulted in an 80 percent reduction in the discharge of total suspended solids from the White Point outfall. That, along with kelp replanting efforts in the 1970s, resulted in a remarkable increase in the kelp canopy from a low of 5 acres (2 hectares) in 1974 to a peak of more than 1,100 acres (445 hectares) in 1989. More recently, erosion and sedimentation have threatened the kelp beds off the Palos Verdes Peninsula. Since 1980, an active landslide at Portuguese Bend on the Palos Verdes Peninsula has supplied more than seven times the suspended solids as the Whites Point outfall (Los Angeles County Sanitation District 1997). The activities that may threaten the habitat features important to the conservation of black abalone are sand replenishment, waste-water management, non-native species introduction and management, kelp harvesting, and activities that exacerbate global climate change.

Specific Area 12. Specific Area 12 includes rocky intertidal and subtidal habitats from Corona Del Mar State Beach to Dana Point in Orange County, CA. The limited extent of rocky intertidal habitat is what defines the northern and southern boundaries of this specific area. The CHRT scored this area of ''Low'' conservation value primarily because the quality of the PCEs is relatively low and because black abalone have not been identified at regularly monitored sampling locations since 2005. Historical information for this area indicates that black abalone were present along this stretch of coastline, and limited abundance information suggests densities of less than one per m^2 (Tissot 2007; pers. comm. with S. Murray, California State University Fullerton (CSUF), on January 8, 2010) in the late 1970s and early 1980s. Thus, there is uncertainty regarding whether these populations were viable at that time. By 1986, local extinction of black abalone at one sampling location within this specific area was reported (Tissot 2007). The CSUF began monitoring four sites within this area in 1996, and no black abalone have been observed at these locations since 2005. A putative black abalone was observed at one additional location in January, 2010. The area contains rocky substrate (88 percent of rocky substrate is consolidated) and food resources that are in fair to good condition, but settlement habitat and water quality are in poor to fair condition. Abundance of crustose coralline algae is limited in the rocky intertidal area and the extirpation of abalone from the habitat has resulted in a shift in its biogenic structure, rendering the area less suitable for settling abalone larvae. Water quality may be tainted by waste-water discharge, agricultural pesticide application and irrigation, construction and operation of desalination plants, and changes in the thermal and chemical properties of sea water through global climate change. Food resources within this area may be impacted by kelp harvesting activities.

Specific Areas 13–16. Specific Areas 13–16 include the rocky intertidal and subtidal habitats surrounding the Northern California Channel Islands: San Miguel Island (Specific Area 13), Santa Rosa Island (Specific Area 14), and Santa Cruz Island (Specific Area 15) in Santa Barbara County, CA, and Anacapa Island (Specific Area 16) in Ventura County, CA. The Northern Channel Islands lie just off California's southern coast in the Santa Barbara Channel and remain somewhat isolated from mainland anthropogenic impacts. In 1980, Congress designated these islands and approximately 100,000 acres (405 km^2) of submerged land surrounding them as a national park because of their unique natural and cultural resources. This area was augmented by the designation of the Channel Islands NMS later that year. The sanctuary boundaries stretch 6 nautical miles (11 km) offshore, including their interconnecting channels. Channel Islands National Park (CINP) began an intertidal monitoring

program on San Miguel, Santa Rosa, and Anacapa islands in the early to mid-1980s, while monitoring on Santa Cruz Island did not begin until 1994. The CHRT scored the conservation value of these areas as ''High,'' recognizing that although the black abalone populations in these areas have experienced declines due to WS and currently lack multiple size classes, the habitat remains in fair to excellent condition and there is evidence of small-scale recruitment at a few locations. Historically, black abalone were present and common at 76 percent of the sampling locations within these specific areas (SWRCB 1979f; SWRCB 1982a and 1982b; Tissot, 2007; pers. comm. with Dan Richards, NPS, on February 11–12, 2010). Severe population declines began in 1986. By the 1990s, declines in abundance of >99 percent were observed at all of the CINP sampling sites. Since 2005, abundance at most locations remains depressed; however, at a small number of sites abundance has increased and repeated recruitment events have occurred. These specific areas contain fair to excellent rocky substrate, food resources, settlement habitat and water quality, despite the fact that abundance has declined dramatically since the 1980s. Because these islands are somewhat remote, there is a limited list of activities that may threaten the PCEs in these specific areas and they include: Oil and chemical spills and clean-up on Santa Cruz Island; waste-water discharge and agricultural pesticide application on Anacapa Island and kelp harvesting and activities that exacerbate global warming.

Specific Areas 17–20. Specific Areas 17–20 include the rocky intertidal and subtidal habitats surrounding the Southern California Channel Islands: San Nicolas Island (Specific Area 17) in Ventura County, CA, Santa Barbara Island (Specific Area 18) in Santa Barbara County, CA, and Santa Catalina Island (Specific Area 19) and San Clemente Island (Specific Area 20) in Los Angeles County, CA. The Southern Channel Islands are part of the same archipelago that includes the Northern Channel Islands. San Nicolas and San Clemente islands have been owned and operated by the U.S. Navy since the early 1930s. These islands accommodate a variety of Navy training, testing, and evaluation activities, including naval surface fire support, air-to-ground ordnance delivery operations, special operations, surface weapon launch support, and radar testing. Santa Barbara Island and its surrounding waters out to six nautical miles (11km) were designated as part of the CINP and the Channel Islands NMS in 1980. Since 1972, Santa Catalina Island has been owned primarily by a nonprofit organization, the Catalina Island Conservancy, whose mission is to preserve and conserve the island.

The CHRT scored the conservation value of San Nicolas Island as ''High,'' because the area contains good to excellent habitat that supports black abalone recruitment and juvenile and adult survival, despite severe declines in black abalone populations due to WS. Since 1981, the U. S. Geological Survey (USGS) and the University of Washington (UW) have monitored multiple sites around San Nicolas Island. Black abalone were considered common at all of the sites up until approximately 1993, when mass mortalities due to WS swept through the island (VanBlaricom *et al.* 2009). Since 2005, slight increases in abundance have been observed at 33 percent of the sampled sites and moderate increases in abundance at one site. At 55 percent of the sampled sites, abundance remains low with densities less than 2 percent of their former values prior to population declines. Recent repeated recruitment events have occurred at a few sites as evidenced by the presence of small individuals (< 30 mm; G. VanBlaricom, USGS and UW, unpublished data). Thus, this specific area supports early life stages. However, the long-term survival of juveniles and adults is questionable, given that relative abundance levels remain low and evidence of multiple size classes is still lacking at the majority of sampling sites. All of the PCEs are present and are of good to excellent quality. The CHRT identified the following activities that may compromise the quality of habitat features essential to the conservation of black abalone within this specific area: In-water construction, waste-water management, coastal development, construction and operation of desalination plants, kelp harvesting, and activities that exacerbate global climate change.

The CHRT scored the conservation value of Santa Barbara Island as ''Medium,'' because, although the PCEs are of fair to excellent quality, there is a lack of evidence of recruitment both historically and currently. In addition, Santa Barbara Island has very low numbers of juvenile and adult black abalone. CINP began limited sampling at Santa Barbara Island in 1985. At that time black abalone were present on the island, and their qualitative abundance levels ranged from rare to common. Since 2005, black abalone have disappeared from one sampling site and remain present, but rare, at another. The CHRT considered the rocky substrate and settlement habitat to be of fair to good quality, food resources to be of poor to fair quality, and water quality to be good to excellent. The only activities that threaten the PCEs and that may require special management on Santa Barbara Island are those that alter the thermal and chemical properties of sea water through global climate change, most notably activities involving fossil fuel combustion.

The CHRT scored the conservation value of Catalina Island as ''High,'' despite uncertainty in the demographic history and current status of black abalone populations on the island, because the habitat is in good condition, has supported black abalone populations historically, and could support black abalone populations currently and in the future. Surveys conducted around Catalina Island in the 1960s, 1970s, and 1980s confirm that black abalone were present at a variety of locations around the island, but size distribution and abundance information are lacking. The CINP and UCSB established a long-term sampling site at Bird Rock in 1982, and a second site was added by UCSB through California Coastal Commission funding in 1995. They are currently monitored by Tatman Foundation and UCSB. Since the 1990s, black abalone have not been encountered at these sites. All of the PCEs are present and are in fair to excellent condition. There is a great deal of uncertainty regarding whether the island supports early life stages and the long-term survival of juveniles and adults because data are lacking. Several activities may compromise the generally good habitat quality surrounding Catalina Island, including in-water construction, waste-water discharge, coastal development, oil and chemical spills and clean-up, construction and operation of desalination plants and tidal and wave energy projects, kelp harvesting, and activities that exacerbate global climate change.

The CHRT scored the conservation value of San Clemente Island as ''High,'' recognizing that the habitat in this area is in good condition and likely supported high densities of black abalone historically (pre-WS). San Clemente Island was surveyed by the CDFG from 1988–1993. As late as October 1988, black abalone were present and populations were robust at a number of locations, but by 1990, population declines due to WS were underway (CDFG 1993). Densities decreased to less than one per m^2 by 1993 (CDFG 1993). The Navy initiated a San Clemente Island-wide investigation to determine the current extent of

remaining black abalone populations on the island in 2008. During 30-minute timed searches at 61 locations that each covered approximately 1500 m^2 of potential black abalone habitat, ten black abalone (all greater than 100 mm in size) were identified and all but two of the animals were solitary individuals (Tierra Data Inc. 2008). The Navy conducted additional black abalone surveys in January and March of 2011, finding an additional 17 black abalone ranging in size from 80 to 190 mm (Navy 2011). All of the PCEs are present and are in good to excellent condition, despite the fact that there is no evidence of recruitment and the island currently does not support long-term survival of adults. In order to protect these high quality PCEs and promote the conservation of black abalone, certain activities may require modification, such as in-water construction, coastal development, kelp harvesting, and activities that exacerbate global climate change.

Special Management Considerations or Protection

Joint NMFS and USFWS regulations at 50 CFR 424.02(j) define ''special management considerations or protection'' to mean ''any methods or procedures useful in protecting physical and biological features of the environment for the conservation of listed species.'' The CHRT identified several threats to black abalone PCEs and the areas in which those threats occur. NMFS and the CHRT then determined whether at least one PCE in each specific area may require special management considerations or protection because of a threat or threats. NMFS and the CHRT worked together to identify activities that could be linked to threats, and when possible, identified ways in which activities might be altered in order to protect the quality of the PCEs. These activities are described briefly in the following paragraphs and Table 1. These activities are documented more fully in the final Biological Report (NMFS 2011a) and final Economic Analysis Report (NMFS 2011b), which provide a description of the potential effects of each category of activities on the PCEs.

The major categories of activities that may affect black abalone habitat include: (1) Coastal development (*e.g.,* construction or expansion of stormwater outfalls, residential and commercial construction); (2) in-water construction (*e.g.,* coastal armoring, pier construction, jetty or harbor construction, pile driving); (3) sand replenishment or beach nourishment activities; (4) dredging and disposal of dredged material; (5) agricultural activities (*e.g.,* irrigation, livestock farming, pesticide application); (6) NPDES activities and activities generating non-point source pollution; (7) sediment disposal activities associated with road maintenance, repair, and construction (previously called ''sidecasting''); (8) oil and chemical spills and clean-up activities; (9) mineral and petroleum exploration or extraction activities; (10) power generation operations involving water withdrawal from and discharge to marine coastal waters; (11) construction and operation of alternative energy hydrokinetic projects (tidal or wave energy projects); (12) construction and operation of desalination plants; (13) construction and operation of liquefied natural gas (LNG) projects; (14) vessel grounding incidents and response; (15) non-native species introduction and management (from commercial shipping and aquaculture); (16) kelp harvesting activities; and (17) activities that exacerbate global climate change (*e.g.,* fossil fuel combustion).

The final Biological Report (NMFS 2011a) and final Economic Analysis Report (NMFS 2011b) provide a description of the potential effects of each category of activities and threats on the PCEs. For example, activities such as in-water construction, coastal development, dredging and disposal, sediment disposal (''sidecasting''), mineral and petroleum exploration and extraction, and sand replenishment may result in increased sedimentation, erosion, turbidity, or scouring in rocky intertidal and subtidal habitats and may have adverse impacts on rocky substrate, settlement habitat, food resources, water quality, or nearshore circulation patterns. The construction of proposed energy and desalination projects along the coast would result in increased in-water construction and coastal development. The operation of these energy projects and desalination projects may also increase local water temperatures with the discharge of heated effluent, introduce elevated levels of certain metals or contaminants into the water, or alter nearshore water circulation patterns. The discharge of contaminants from activities such as NPDES activities may affect water quality, food resources (by affecting the algal community), and settlement habitat (by affecting the ability of larvae to settle). Introduction of non-native species may also affect food resources and settlement habitat if these species alter the natural algal communities. Shifts in water temperatures and sea level related to global climate change may also affect black abalone habitat. For example, coastal water temperatures may increase to levels above the optimal range for black abalone, and sea level rise may alter the distribution of rocky intertidal habitats along the California coast.

TABLE 1—SUMMARY OF ACTIVITIES THAT MAY AFFECT BLACK ABALONE PCES, INCLUDING: THE AREA(S) IN WHICH THE ACTIVITY IS LOCATED, THE PCE(S) THE ACTIVITY COULD AFFECT AND THE NATURE OF THAT THREAT, THE ESA SECTION 7 NEXUS FOR THAT ACTIVITY, AND THE POSSIBLE MODIFICATIONS TO THE ACTIVITY DUE TO THE BLACK ABALONE CRITICAL HABITAT DESIGNATION

Activity	Specific areas	PCE and nature of the threat	Section 7 nexus	Possible modification(s) to the activity
Dredging and disposal of dredged material.	Unknown ...	*Rocky substrate* PCE—Dredging that does occur near rocky intertidal and subtidal areas may increase sedimentation into the rocky habitat. A variety of harmful substances, including heavy metals, oil, tributyltin (TBT), polychlorinated biphenyls (PCBs) and pesticides, can be absorbed into the seabed sediments and contaminate them.	The U.S. Army Corps of Engineers (USACE) issues permits pursuant to Section 404 of the Clean Water Act (CWA), among several others.	Restrictions on the spatial and temporal extent of dredging activities and the deposition of dredge spoil. Requirements to monitor the effects of dredge spoil deposition on black abalone habitat.

TABLE 1—SUMMARY OF ACTIVITIES THAT MAY AFFECT BLACK ABALONE PCES, INCLUDING: THE AREA(S) IN WHICH THE ACTIVITY IS LOCATED, THE PCE(S) THE ACTIVITY COULD AFFECT AND THE NATURE OF THAT THREAT, THE ESA SECTION 7 NEXUS FOR THAT ACTIVITY, AND THE POSSIBLE MODIFICATIONS TO THE ACTIVITY DUE TO THE BLACK ABALONE CRITICAL HABITAT DESIGNATION—Continued

Activity	Specific areas	PCE and nature of the threat	Section 7 nexus	Possible modification(s) to the activity
		Water quality PCE—Dredging and disposal processes can release contaminants into the water column, affecting water quality, and making them available to be taken up by animals and plants, which could cause morphological or reproductive disorders.		
In-water construction.	10, 17, 19, and 20.	*Rocky substrate* PCE—Increased sedimentation, a side effect of some in-water construction projects, can reduce the quality and/or quantity of rocky substrate.	The USACE issues permits pursuant to Section 10 of the Rivers and Harbors Act of 1899 (RHA) among several others. Although in-water construction projects are commonly undertaken by private or non-Federal parties, in most cases they must obtain a USACE permit.	Bank stabilization measures and more natural erosion control.
		Food resources PCE—The presence of in-water structures may affect black abalone habitat by affecting the distribution and abundance of algal species that provide food for abalone or the distribution and abundance of other intertidal invertebrate species.		
		Settlement habitat PCE—Changes in algal communities could affect settlement of larval abalone (believed to be influenced by the presence of coralline algae).		
		Nearshore circulation pattern PCE—Nearshore circulation patterns may affect intertidal communities by providing stepping-stones between populations, resulting in range extensions for species with limited dispersal distances. Artificial structures, like breakwaters, may also alter the physical environment by reducing wave action and modifying nearshore circulation and sediment transport..		
Sand replenishment.	2, 4, 7, and 11.	*Rocky substrate* PCE—Sand movements could cover up rocky substrate thereby reducing its quality and/or quantity.	The USACE is responsible for administering Section 404 permits under the CWA, which are required for sand replenishment activities.	Monitor the water quality (turbidity) during and after the project. Place a buffer around pertinent areas within critical habitat that sand replenishment projects have to work around. Ensure any dredge discharge pipelines are sited to avoid rocky intertidal habitat. Construct training dikes to help retain the sand at the receiving location, which should minimize movement of sand into the rocky intertidal areas.

TABLE 1—SUMMARY OF ACTIVITIES THAT MAY AFFECT BLACK ABALONE PCEs, INCLUDING: THE AREA(S) IN WHICH THE ACTIVITY IS LOCATED, THE PCE(S) THE ACTIVITY COULD AFFECT AND THE NATURE OF THAT THREAT, THE ESA SECTION 7 NEXUS FOR THAT ACTIVITY, AND THE POSSIBLE MODIFICATIONS TO THE ACTIVITY DUE TO THE BLACK ABALONE CRITICAL HABITAT DESIGNATION—Continued

Activity	Specific areas	PCE and nature of the threat	Section 7 nexus	Possible modification(s) to the activity
NPDES-permitted activities..	1, 2, 3, 4, 5, 7, 8, 9, 10, 11, 12, 16, 17, and 19..	*Food resources* PCE—Sewage outfalls may affect food resources by causing light levels to be reduced to levels too low to support *Macrocystis* germination and growth. Eutrophication occurs around southern California sewage outfalls where phytoplankton crops and primary production exceed typical levels and approach values characteristic of upwelling periods. Discharge that results in reduced ocean pH could reduce the abundance of coralline algae. *Water quality* PCE—Exposure to heavy metals can affect growth of marine organisms, either promoting or inhibiting growth depending on the combination and concentrations of metals. There is little information on these effects on black abalone, however. Discharge that results in ocean pH values outside the normal range for seawater (e.g., typically ranging from 7.5 to 8.5) may cause reduced growth and survival of abalone, as has been observed in other marine gastropods (Shirayama and Thornton 2005).	Issuance of CWA permits. State water quality standards are subject to an ESA section 7 consultation between NMFS and the EPA and NMFS can review individual NPDES permit applications for impacts on ESA-listed species.	Where Federal permits are necessary, ensure discharge meets standards relevant for black abalone. Require measures to prevent or respond to a catastrophic event (i.e., using best technology to avoid unnecessary discharges).
Coastal development.	2, 4, 7, 8, 10, 17, 19, and 20.	*Rocky substrate* PCE—Increased sediment load that may result from urbanization of the coast and of watersheds (increased transport of fine sediments into the coastal zone by rivers or runoff) can reduce the quality and/or quantity of rocky substrate. In addition, construction of coastal armoring is often associated with coastal urban development to protect structures from wave action or prevent erosion. *Food resources* PCE—Increased sedimentation may also affect feeding by covering up food resources, altering algal communities (including algal communities on the rocky reef and the growth of kelp forests that supply drift algae), and altering invertebrate communities (affecting biological interactions). Ephemeral and turf-forming algae were found to be favored in rocky intertidal areas that experience intermittent inundation (Airoldi 1998, cited in Thompson *et al.* 2002). *Settlement habitat* PCE—Increased sedimentation may affect settlement of larvae and propagules by covering up settlement habitat as well as affecting the growth of encrusting coralline algae (Steneck *et al.* 1997, cited in Airoldi 2003), thought to be important for settlement.	The USACE permits construction or expansion of stormwater outfalls, discharge or fill of wetlands, flood control projects, bank stabilization, and in-stream work.	Stormwater pollution prevention plan; permanent stormwater site plan; and stormwater best management practice operations and maintenance.

TABLE 1—SUMMARY OF ACTIVITIES THAT MAY AFFECT BLACK ABALONE PCEs, INCLUDING: THE AREA(S) IN WHICH THE ACTIVITY IS LOCATED, THE PCE(S) THE ACTIVITY COULD AFFECT AND THE NATURE OF THAT THREAT, THE ESA SECTION 7 NEXUS FOR THAT ACTIVITY, AND THE POSSIBLE MODIFICATIONS TO THE ACTIVITY DUE TO THE BLACK ABALONE CRITICAL HABITAT DESIGNATION—Continued

Activity	Specific areas	PCE and nature of the threat	Section 7 nexus	Possible modification(s) to the activity
Sediment disposal associated with road maintenance, repair, and construction (“Sidecasting”).	7 and 8	*Rocky substrate and settlement habitat* PCEs— Increased likelihood of sediment input into rocky intertidal and subtidal habitats may reduce its quality and quantity. *Food resources* PCE—May result in possible reductions or changes to food resources. See sedimentation effects as described under “Coastal development”, above.	National Marine Sanctuary (NMS) regulations prohibit discharge of materials within its boundaries, as well as outside its boundaries if the material may enter the sanctuary and harm sanctuary resources. However, under certain circumstances, a permit may be obtained from the MBNMS to allow for a prohibited activity.	Haul away (or store locally) excess material from road maintenance activities; place excess material at a stable site at a safe distance from rocky intertidal habitats; and use mulch or vegetation to stabilize the material.
Agricultural activities (including pesticide application, irrigation, and livestock farming).	1, 2, 3, 4, 7, 8, 9, 10, 12, and 16.	*Rocky substrate* PCE—Soil erosion from intensive irrigated agriculture or livestock farming of areas adjacent to the coast can cause increased sedimentation thereby reducing the quality and quantity of rocky substrate.	*Irrigation*—water suppliers may provide water via contract with U.S. Bureau of Reclamation (USBR) or using infrastructure owned or maintained by the USBR. Privately owned diversions may require a Federal permit from USACE under sections 401 or 404 of the CWA.	For irrigated agriculture: conservation crop rotation, underground outlets, land smoothing, structures for water control, subsurface drains, field ditches, mains or laterals, and toxic salt reduction.
		Food resources PCE—Herbicides are designed to kill plants, thus herbicide contamination of water could have devastating effects on aquatic plants.	*Pesticide Application*—Environmental Protection Agency (EPA) consultation on the Federal Insecticide, Fungicide, and Rodenticide Act (FIFRA), pesticide registration program, and NPDES permits for aquatic pesticides.	For pesticides application: restrictions on application of some pesticides within certain distances from streams.
		Settlement habitat PCE—Laboratory experiments showed that the presence of pesticides (those examined in the study were DDT, methoxychlor, dieldrin, and 2,4–D) interfered with larval settlement. Presence of pesticides had a much lesser effect on survival of larvae. *Water quality* PCE—Pesticides alter the chemical properties of sea water such that they can interfere with settlement cues emitted by coralline algae and associated diatom films, and/or they may inhibit growth of marine algae upon which black abalone depend for food. There is little information on these effects on black abalone or related species, however, especially for pesticides that are currently in use.	*Livestock farming*—Bureau of Land Management (BLM) and the U.S. Forest Service (USFS).	For livestock farming: fencing riparian areas; placing salt or mineral supplements to draw cattle away from rivers; total rest of allotments when possible; and frequent monitoring.

TABLE 1—SUMMARY OF ACTIVITIES THAT MAY AFFECT BLACK ABALONE PCES, INCLUDING: THE AREA(S) IN WHICH THE ACTIVITY IS LOCATED, THE PCE(S) THE ACTIVITY COULD AFFECT AND THE NATURE OF THAT THREAT, THE ESA SECTION 7 NEXUS FOR THAT ACTIVITY, AND THE POSSIBLE MODIFICATIONS TO THE ACTIVITY DUE TO THE BLACK ABALONE CRITICAL HABITAT DESIGNATION—Continued

Activity	Specific areas	PCE and nature of the threat	Section 7 nexus	Possible modification(s) to the activity
Oil & chemical spills & response.	2, 4, 5, 7, 8, 9, 12, 15, and 19.	*Rocky substrate and settlement habitat* PCEs—Oil spill clean-up activities may be as destructive, or more destructive, than the oil spill itself. Oil spill clean-up may involve application of toxic dispersants and the use of physical cleaning methods such as the use of high pressure and/or high temperature water to flush out oil which may decrease the quality of rocky substrate and settlement habitat in an area. Oil, oil/dispersant mixtures, and dispersants used in oil spill clean-up may adversely affect grazing mollusks like abalone in rocky intertidal areas, although less-toxic dispersants have been developed in recent years. *Food resources* PCE—The use of dispersants and physical cleaning methods may affect black abalone food resources (algal community). Chemical spills could also affect food resources, if the chemicals kill algae or affect algal growth. *Water quality* PCE—Effects of oil spills vary from no discernable differences to widespread mortality of marine invertebrates over a large area and reduced densities persisting a year after the spill.	Review of oil spill response plan from United States Coast Guard (USCG). Regulations under the Water Pollution Control Act.	Modifications are uncertain, but could include measures to prevent or minimize the spill from coming onshore (e.g., deploy boom, apply dispersants, mechanical recovery of spilled substance) and monitoring of the shoreline and water quality during and after the spill. These measures may already be considered due to the presence of other sensitive resources.
Vessel grounding incidents and response.	2 and 8	*Rocky substrate and settlement habitat* PCEs—Vessel grounding can affect the rocky substrate and have substantial effects on the environment, ranging from minor displacement of sediment to catastrophic damage to reefs. Wave activity may also cause the vessel to roll excessively and do more damage to the ocean floor. *Food resources* and *water quality* PCEs—The risk of invasion by foreign species attached to the ship's hull into a local environment. The wreck of an ocean-going vessel can result in large masses of steel distributed over substantial areas of seabed, particularly in high energy, shallow water environments. The wreckage may be a chronic source of dissolved iron. Elevated levels of iron may affect water quality and result in an increase of opportunistic algae blooms.	The USCG has the authority to respond to all oil and hazardous substance spills in the offshore/coastal zone, while the EPA has the authority to respond in the inland zone.	Best management practices (BMP) for oil spill and debris clean-up to reduce trampling. Education of USCG, NMS biologists, and others involved in clean-up to raise awareness of black abalone.
Construction and operation of power plants.	10	*Water quality* PCE—The power plants' use of coastal waters for cooling and subsequently discharging of heated water back into the marine environment may raise water temperatures and introduce contaminants into the water. Elevated water temperatures have been linked to increased virulence of WS.	The Diablo Canyon Nuclear Power Plant (the only power plant identified within the specific areas; located in specific area 10) is licensed through the Nuclear Regulatory Commission.	Modifications are uncertain at this time. The feasibility of closed-system wet cooling towers is questionable. Because the CWA provides a high level of baseline protections, black abalone critical habitat is not likely to result in additional modifications.

TABLE 1—SUMMARY OF ACTIVITIES THAT MAY AFFECT BLACK ABALONE PCEs, INCLUDING: THE AREA(S) IN WHICH THE ACTIVITY IS LOCATED, THE PCE(S) THE ACTIVITY COULD AFFECT AND THE NATURE OF THAT THREAT, THE ESA SECTION 7 NEXUS FOR THAT ACTIVITY, AND THE POSSIBLE MODIFICATIONS TO THE ACTIVITY DUE TO THE BLACK ABALONE CRITICAL HABITAT DESIGNATION—Continued

Activity	Specific areas	PCE and nature of the threat	Section 7 nexus	Possible modification(s) to the activity
Construction and operation of desalination plants.	4, 7, 8, 9, 10, 12, 17, and 19.	*Water quality* PCE—Discharge of hyper-saline water results in increased salinity and fluctuating salinity conditions that may affect sensitive organisms near the outfall. The impacts of brine effluent are generally more severe in rocky substrate than on sandy seafloor habitats. However, more research is needed on the tolerance level of black abalone for different salinities. Other effects of the discharge on water quality include increased turbidity, concentration of organic substances and metals contained in the feed waters, concentration of metals picked up through contact with the plant components, thermal pollution, and decreased oxygen levels. Entrainment and impingement of black abalone larvae may also occur from water intake at desalination plants, but this is primarily a take issue.	A desalination facility may require a Section 404 permit under the CWA from the USACE if it involves placing fill in navigable waters, and a Section 10 permit under the RHA if the proposal involves placing a structure in a navigable waterway.	Potential conservation efforts to mitigate desalination impacts may include the treatment of hyper-saline effluent to ensure that salinity levels are restored to normal values. The costs of treating hyper-saline effluent or finding an alternate manner of brine disposal can vary widely across plants depending on plant capacity and design.
Construction and operation of tidal and wave energy projects.	1 and 19	*Rocky substrate* PCE—Impacts on rocky substrate may result from the installation of power lines to transport power to shore. These projects typically involve placement of structures, such as buoys, cables, and turbines, in the water column. *Water quality* PCE—Alternative energy projects may result in reduced wave height by as much as 5 to 13 percent, which may benefit abalone habitat. Effects on wave height would generally only be observed 1–2 km away from the wave energy device. Another concern is the potential for liquids used in the system to leak or be accidentally spilled, resulting in release of toxic fluids. Toxins may also be released in the use of biocides to control the growth of marine organisms. The potential effects of coastal wave and tidal energy projects on black abalone habitat are uncertain, because these projects are relatively new and the impacts are very site-specific.	Subject to the Federal Energy Regulatory Commission (FERC) permitting and licensing requirements, as well as requirements under Section 401 of the CWA.	Use of non-toxic fluids instead of toxic fluids. When the project requires the use of power lines, use existing power lines, instead of constructing new ones, and avoid rocky intertidal areas.

TABLE 1—SUMMARY OF ACTIVITIES THAT MAY AFFECT BLACK ABALONE PCES, INCLUDING: THE AREA(S) IN WHICH THE ACTIVITY IS LOCATED, THE PCE(S) THE ACTIVITY COULD AFFECT AND THE NATURE OF THAT THREAT, THE ESA SECTION 7 NEXUS FOR THAT ACTIVITY, AND THE POSSIBLE MODIFICATIONS TO THE ACTIVITY DUE TO THE BLACK ABALONE CRITICAL HABITAT DESIGNATION—Continued

Activity	Specific areas	PCE and nature of the threat	Section 7 nexus	Possible modification(s) to the activity
Construction and operation of liquefied natural gas (LNG) projects.	Unknown ...	*Rocky substrate* PCE—Onshore LNG terminals involve construction of breakwaters, jetties, or other shoreline structures. The activities associated with construction (e.g., dredging) may affect black abalone habitat. Offshore LNG terminals involve construction of pipelines to transport LNG onshore and may affect rocky habitat. See sedimentation effects described under ''dredging'', ''in-water construction'', and ''coastal development''. *Food resource* and *water quality* PCEs—There is an increased potential for oil spills and potential effects on water quality from the presence of vessels transporting and offloading LNG at the terminals.	FERC has license authority for terminals built onshore and in state waters. The Maritime Administration and USCG have siting and permitting authority for deepwater ports in Federal waters. CWA permits under section 401 (water quality certificate) and/or section 404 (a dredge and fill permit) and Clean Air Act permits under section 502 may be required.	Offshore facilities: In the installation of pipelines, avoid rocky intertidal habitats or use existing pipelines. Onshore siting considerations: Avoid siting LNG projects within or adjacent to rocky intertidal habitats.
Mineral and petroleum exploration and extraction.	10	*Rocky substrate* PCE—This activity may result in increased sedimentation into rocky intertidal habitats. See sedimentation effects described under ''dredging'', ''in-water construction'', and ''coastal development''. *Food resources* and *settlement habitat* PCE—In a laboratory study, water-based drilling muds from an active platform were found to negatively affect the settlement of red abalone larvae on coralline algae, but fertilization and early development were not affected. *Water quality* PCE—The activity may cause an increased risk of oil spills or leaks and increased sedimentation thereby affecting water quality.	BOEMRE manages the nation's offshore energy and mineral resources, including oil, gas, and alternative energy sources, as well as sand, gravel and other hard minerals on the outer continental shelf.	Adoption of erosion control measures; adoption of oil spill clean-up protocols and oil spill prevention plans; more Clean Seas boats as first responders to prevent oil spills from coming onshore; and relocation of proposed oil platforms further away from black abalone habitats.
Non-native species introduction and management.	2, 4, 8, 10, and 11.	*Food resources* PCE—The release of wastewater, sewage, and ballast water from commercial shipping presents a risk to kelp and other macroalgal species because of the potential introduction of exotic species.	The National Invasive Species Act of 1996 (NISA) and the Nonindigenous Aquatic Nuisance Prevention and Control Act of 1990 under the USCG.	For commercial shipping: safe (non-contaminated) ballast disposal; rinse anchors and anchor chains when retrieving the anchor to remove organisms and sediments at their place of origin; remove hull fouling organisms from hull, piping, propellers, sea chests, and other submerged portions of a vessel, on a regular basis, and dispose of removed substances in accordance with local, state, and Federal law.
		Settlement habitat PCE—Non-native species may displace native organisms by preying on them or outcompeting them for resources such as food, space or both. Non-native species may introduce disease-causing organisms and can cause substantial population, community, and habitat changes.	.....	For aquaculture: inspect aquaculture facilities to prevent non-native species transport in packing materials.

TABLE 1—SUMMARY OF ACTIVITIES THAT MAY AFFECT BLACK ABALONE PCEs, INCLUDING: THE AREA(S) IN WHICH THE ACTIVITY IS LOCATED, THE PCE(S) THE ACTIVITY COULD AFFECT AND THE NATURE OF THAT THREAT, THE ESA SECTION 7 NEXUS FOR THAT ACTIVITY, AND THE POSSIBLE MODIFICATIONS TO THE ACTIVITY DUE TO THE BLACK ABALONE CRITICAL HABITAT DESIGNATION—Continued

Activity	Specific areas	PCE and nature of the threat	Section 7 nexus	Possible modification(s) to the activity
Kelp harvesting.	7–20	*Food resources* PCE—Kelp is the primary source of food for black abalone. Kelp is harvested for algin, which is used as a binder, emulsifier, and molding material in a broad range of products, and as a food source in abalone aquaculture operations. The harvest is small, but the kelp grows quickly, and harvest could generate drift (which can potentially be beneficial to black abalone). Potential impacts related to kelp harvesting are unclear.	None	None.
Activities leading to global climate change (e.g., fossil fuel combustion).	1–20	Affects all PCEs. There is little information on these effects, however.	Uncertain	Uncertain.
		Water quality PCE—Sea surface water temperatures that exceed 25 °C may increase risks to black abalone. Ocean pH values that are outside of the normal range for seawater (i.e., pH less than 7.5 or greater than 8.5) may cause reduced growth and survivorship in abalone as has been observed in other marine gastropods (Shirayama and Thornton 2005). *Food resources* and *settlement habitat* PCE–Increasing partial pressure of carbon dioxide may reduce abundance of coralline algae and thereby affect the survival of newly settled black abalone (Feely *et al.* 2004; Hall-Spencer *et al.* 2008).		

Unoccupied Areas

Section 3(5)(A)(ii) of the ESA authorizes the designation of ''specific areas outside the geographical area occupied at the time [the species] is listed'' if these areas are essential for the conservation of the species. Regulations at 50 CFR 424.12(e) emphasize that the agency ''shall designate as critical habitat areas outside the geographical area presently occupied by a species only when a designation limited to its present range would be inadequate to ensure the conservation of the species.'' The CHRT identified potential unoccupied areas to consider for designation. These areas represent segments of the California and Oregon coast that contain rocky intertidal habitats that historically supported black abalone and that may support black abalone populations in the future. The CHRT identified the following unoccupied areas: (1) From Cape Arago State Park, Oregon, to Del Mar Landing Ecological Reserve, California; (2) from just south of Government Point to Point Dume State Beach, California; and (3) from Cardiff State Beach in Encinitas, California, to Cabrillo National Monument, California.

In each of these areas, black abalone have not been observed in surveys since 2005. In the area from Cape Arago, Oregon, to the Del Mar Landing Ecological Reserve, California, four museum specimens of black abalone were noted from two survey sites (Geiger 2004), one specimen was noted from another site where red abalone are considered common (Thompson 1920), and no data on black abalone were available for the other sites. Black abalone were not observed during rocky intertidal surveys conducted in the 1970s and 1980s at several sites within this area (pers. comm. with J. DeMartini, Humboldt State University, on February 11, 2010). In the area from just south of Government Point to Point Dume State Beach in California, black abalone were reported as rare at one site (Morin and Harrington 1979), but have never been observed at the other survey sites. In the area from Cardiff State Beach to Cabrillo National Monument in California, black abalone were noted to be historically present at a few sites (Zedler 1976, 1978) and rare at one site (California

State Water Resources Control Board 1979e).

In the proposed rule, we solicited information from the public regarding the historical, current, and potential condition of the habitat and of black abalone populations within the unoccupied areas identified above and the importance of these areas to conservation of the species. Although we received public comments in support of designating these unoccupied areas, we did not receive any additional information to inform our analysis of whether these unoccupied areas are essential for conservation of black abalone. At this time, the CHRT concluded that the three unoccupied areas may be essential for conservation, but that there is currently insufficient data to conclude that any of the areas are essential for conservation. For the unoccupied area from Cape Arago, Oregon, to the Del Mar Landing Ecological Reserve, California, the historical presence of black abalone was uncertain, because the only specimens available were museum specimens for which the origin was questionable. For the unoccupied areas from Government Point to Point Dume State Beach and from Cardiff State Beach to Cabrillo National Monument in California, there was insufficient information to indicate that expansion of black abalone populations into the areas is essential for recovery of the species. For example, we lack information needed to understand the historical importance of the populations within these unoccupied areas to the species as a whole (*e.g.,* as a source or sink population, or for connectivity with other populations throughout the coast). Therefore, the three presently unoccupied areas were not considered in further analyses. We note that we may revise the critical habitat designation as information about these areas becomes available in the future.

Military Lands

Under the Sikes Act of 1997 (Sikes Act) (16 U.S.C. 670a), ''each military installation that includes land and water suitable for the conservation and management of natural resources'' is required to develop and implement an integrated natural resources management plan (INRMP). An INRMP integrates implementation of the military mission of the installation with stewardship of the natural resources found there. Each INRMP includes: An assessment of the ecological needs on the military installation, including the need to provide for the conservation of listed species; a statement of goals and priorities; a detailed description of management actions to be implemented to provide for these ecological needs; and a monitoring and adaptive management plan. Each INRMP must, to the extent appropriate and applicable, provide for: Fish and wildlife management; fish and wildlife habitat enhancement or modification; wetland protection, enhancement, and restoration where necessary to support fish and wildlife; and enforcement of applicable natural resource laws. The ESA was amended by the National Defense Authorization Act for Fiscal Year 2004 (Pub. L. 108–136) to address the designation of military lands as critical habitat. ESA section 4(a)(3)(B)(i) states: ''The Secretary shall not designate as critical habitat any lands or other geographical areas owned or controlled by the Department of Defense, or designated for its use, that are subject to an integrated natural resources management plan prepared under section 101 of the Sikes Act (16 U.S.C. 670a), if the Secretary determines in writing that such plan provides a benefit to the species for which critical habitat is proposed for designation.''

The Navy's facilities at San Nicolas Island are covered by an INRMP that was recently revised and approved in May 2011. Under the revised San Nicolas Island INRMP, the Navy will conduct the following measures to address black abalone protection and conservation: (1) Continue to support black abalone surveys and studies on San Nicolas Island, such as Dr. Glenn VanBlaricom's ongoing monitoring surveys of black abalone; (2) conduct its own intertidal surveys to monitor black abalone and other intertidal species on San Nicolas Island; (3) develop and update outreach and education materials to incorporate information on black abalone and restrictions to protect the species; (4) maintain and enforce restricted areas on the south side of San Nicolas Island; and (5) continue to employ an adaptive management strategy for black abalone at San Nicolas Island by evaluating information collected through monitoring and research studies and incorporating management strategies based on that information into the INRMP. We concluded that the measures under the revised INRMP provide protection for black abalone populations and habitat on San Nicolas Island. In addition, the ongoing surveys have and will continue to inform conservation and management strategies for the recovery of black abalone on San Nicolas Island. Based on the benefits provided to black abalone under the revised San Nicolas Island INRMP, we determined under section 4(a)(3)(B) of the ESA that San Nicolas Island is no longer eligible for designation as critical habitat.

The Navy's facilities at San Clemente Island are covered by an INRMP that is scheduled to be revised in the next year. To provide for black abalone protection and conservation during the interim, the Navy has developed and adopted an amendment to the existing 2002 San Clemente Island INRMP. The amendment, signed and adopted in June 2011, contains several measures to address black abalone protection, management, and conservation on San Clemente Island. The amendment describes ongoing efforts by the Navy to benefit black abalone, including but not limited to: (1) Facilitating access to intertidal areas on San Clemente Island for scientific studies on black abalone; (2) continued bi-annual rocky intertidal surveys at four established MARINe sites on San Clemente Island; (3) continued enforcement of safety zone closures around San Clemente Island that prohibit or limit access to intertidal regions of the island; and (4) continued participation in programs such as the Southern California Mussel Watch Program and monitoring efforts in compliance with the State Water Resources Control Board Area of Special Biological Significance discharge regulations. Under the amendment, the Navy will also: (1) Create a rocky intertidal monitoring database for San Clemente Island, to be updated annually; (2) support and develop the monitoring of relevant environmental variables for black abalone, such as water temperature; and (3) update education and outreach materials to include information on black abalone and no-take restrictions for all abalone species, to prevent illegal harvest of abalone. Finally, the Navy will collaborate with NMFS and black abalone experts to develop a black abalone management plan for San Clemente Island, to include: (1) Data from historical black abalone abundance and habitat surveys; (2) a black abalone monitoring program; (3) a plan for regular reporting of information from the Navy to NMFS; and (4) a plan for continued coordination between the Navy and NMFS. We concluded that the amended INRMP provides for the protection of black abalone and its habitat on San Clemente Island. In addition, the ongoing surveys and future management plan will inform black abalone recovery efforts on San Clemente Island and provide a mechanism for NMFS and the Navy to collaborate closely on these efforts. Based on the benefits provided for black

abalone under the amendment to the 2002 San Clemente Island INRMP, we determined under section 4(a)(3)(B) of the ESA that San Clemente Island is no longer eligible for designation as critical habitat.

NMFS plans to coordinate with the Navy and participate in annual reviews of the implementation of the INRMPs. If NMFS determines that implementation of the INRMPs is not adequate to provide benefits to black abalone, NMFS may consider revising the critical habitat designation to re-evaluate the eligibility of San Nicolas Island and San Clemente Island for designation.

Application of ESA Section 4(b)(2)

Section 4(b)(2) of the ESA requires the Secretary of Commerce (Secretary) to consider the economic, national security, and any other relevant impacts of designating any particular area as critical habitat. Any particular area may be excluded from critical habitat if the Secretary determines that the benefits of excluding the area outweigh the benefits of designating the area. However, the Secretary may not exclude a particular area from designation if exclusion will result in the extinction of the species. Because the authority to exclude is discretionary, exclusion is not required for any areas. We exclude one occupied specific area (i.e., Corona Del Mar State Beach to Dana Point, Orange County, CA) from the critical habitat designation because the economic benefits of exclusion outweigh the benefits of designation.

The first step in conducting the ESA section 4(b)(2) analysis is to identify the ''particular areas'' to be analyzed. Where we considered economic impacts and weighed the economic benefits of exclusion against the conservation benefits of designation, we used the same biologically-based ''specific areas'' we identified in the previous sections pursuant to section 3(5)(A) of the ESA (*e.g.,* Del Mar Landing Ecological Reserve to Bodega Head, Bodega Head to Point Bonita, Farallon Islands, etc.). Delineating the ''particular areas'' as the same units as the ''specific areas'' allowed us to most effectively compare conservation benefits of designation with economic benefits of exclusion. Delineating particular areas based on impacts to national security or other relevant impacts was based on land ownership or control (*e.g.,* land controlled by the Department of Defense (DOD) within which national security impacts may exist, or Indian lands). We requested but did not receive information on any other relevant impacts that should be considered. Thus, our ESA section 4(b)(2) analysis focused on the economic impacts and impacts to national security.

The next step in the ESA section 4(b)(2) analysis involves identification of the impacts of designation (*i.e.,* the benefits of designation and the benefits of exclusion). We then weigh the benefits of designation against the benefits of exclusion to identify areas where the benefits of exclusion may outweigh the benefits of designation. The benefits of designation include the protections afforded to black abalone and its habitat by the critical habitat designation and the application of ESA section 7(a)(2). The benefits of exclusion, in this case, include the economic benefits and impacts on national security that would be avoided if a particular area were excluded from the critical habitat designation. The following sections describe how we determined the benefits of designation and the benefits of exclusion and how these benefits were weighed to identify particular areas that may be eligible for exclusion from the designation. We also summarize the results of this weighing process and our determinations regarding exclusion of any particular areas.

Impacts of Designation

The primary impact of a critical habitat designation stems from the requirement under section 7(a)(2) of the ESA that Federal agencies insure their actions are not likely to result in the destruction or adverse modification of critical habitat. Determining this impact is complicated by the fact that section 7(a)(2) of the ESA contains the overlapping requirement that Federal agencies must also insure their actions are not likely to jeopardize the species' continued existence. One incremental impact of designation is the extent to which Federal agencies modify their actions to insure their actions are not likely to destroy or adversely modify the critical habitat of the species, beyond any modifications they would make because of the listing and the jeopardy requirement. When a modification would be required due to impacts to both the species and critical habitat, the impact of the designation is considered co-extensive with the ESA listing of the species. Additional impacts of designation include state and local protections that may be triggered as a result of the designation and the benefits from educating the public about the importance of each area for species conservation. Thus, the impacts of the designation include conservation impacts for black abalone and its habitat, economic impacts, impacts on national security, and other relevant impacts that may result from the designation and the application of ESA section 7(a)(2).

In determining the impacts of the designation, we focused on the incremental change in Federal agency actions as a result of the critical habitat designation and the destruction/adverse modification provision, beyond the changes predicted to occur as a result of listing and the jeopardy provision (see *Arizona Cattle Growers* v. *Salazar,* 606 F. 3d 1160 (9th Cir. 2010)). We analyzed the impact of this designation based on a comparison of the world with and without black abalone critical habitat. We focused on the potential incremental impacts beyond the impacts that would result from the listing and jeopardy provision, and other baseline protections identified for black abalone habitat. In some instances where it was difficult to exclude potential impacts that may already occur under the baseline, we used our best professional judgment to identify and estimate the incremental impacts of the critical habitat designation.

Benefits of Designation

The primary benefit of designation is the protection afforded under section 7 of the ESA, requiring all Federal agencies to insure their actions are not likely to destroy or adversely modify designated critical habitat. This is in addition to the requirement that all Federal agencies insure their actions are not likely to jeopardize the continued existence of the species. In addition, the designation may provide education and outreach benefits by informing the public about areas and features important to the conservation of black abalone. By delineating areas of high conservation value, the designation may help focus and contribute to conservation efforts for black abalone and their habitats.

The designation of critical habitat has been found to benefit the status and recovery of ESA-listed species. Recent reports by the USFWS indicate that species with critical habitat are more likely to have increased and less likely to have declined than species without critical habitat (Taylor *et al.* 2005). In addition, species with critical habitat are also more likely to have a recovery plan and to have these plans implemented, compared to species without critical habitat (Harvey *et al.* 2002; Lundquist *et al.* 2002). These benefits may result from the unique, species-specific protections afforded by critical habitat (*e.g.,* enhanced habitat protection, increased public awareness and education of important habitats) that are more comprehensive than other

existing regulations (Hagen and Hodges 2006).

The benefits of designation are not directly comparable to the benefits of exclusion for the purposes of weighing the benefits under the ESA section 4(b)(2) analysis as described below. Ideally, the benefits of designation and benefits of exclusion should be monetized in order to directly compare and weigh them. With sufficient information, it may be possible to monetize the benefits of a critical habitat designation by first quantifying the benefits expected from an ESA section 7 consultation and translating that into dollars. We are not aware, however, of any available data to monetize the benefits of designation (*e.g.,* estimates of the monetary value of the PCEs within areas designated as critical habitat, or of the monetary value of education and outreach benefits). As an alternative approach, we determined the benefits of designation based on the CHRT's biological analysis of the specific areas. We used the CHRT's conservation value ratings (High, Medium, and Low) to represent the qualitative conservation benefits of designation for each of the specific areas considered for designation. In evaluating the conservation value of each specific area, the CHRT focused on the habitat features present in each area, the habitat functions provided by each area, and the importance of protecting the habitat for the overall conservation of the species. The CHRT considered a number of factors to determine the conservation value of each specific area, including: (a) The present condition of the primary constituent elements or PCEs; (b) the level at which the habitat supports recruitment of early life stages, based on the level of recruitment observed at survey sites within the area; and (c) the level at which the habitat supports long-term survival of juvenile and adult black abalone, based on trends in the abundance and size frequencies of black abalone populations observed at survey sites within the area. These conservation value ratings represent the estimated conservation impact to black abalone and its habitat if the area were designated as critical habitat, and thus were used to represent the benefit of designation. The final Biological Report (NMFS 2011a) provides detailed information on the CHRT's biological analysis and evaluation of each specific area.

Benefits of Exclusion Based on Economic Impacts and Final Exclusions

The economic benefits of exclusion are the economic impacts that would be avoided by excluding particular areas from the designation. To determine these economic impacts, we first asked the CHRT to identify activities within each specific area that may affect black abalone and its critical habitat. The 17 categories of activities identified by the CHRT are identified in the ''Special Management Considerations and Protections'' section above. We then considered the range of modifications NMFS might seek in these activities to avoid destroying or adversely modifying black abalone critical habitat. Where possible, we focused on modifications beyond those that may be required under the jeopardy provision. Because of the limited consultation history, we relied on information from other ESA section 7 consultations and the CHRT's expertise to determine the types of activities and potential range of modifications. For each potential impact, we tried to provide information on whether the impact is more closely associated with destruction/adverse modification or with jeopardy, to distinguish the impacts of applying the jeopardy provision versus the destruction/adverse modification provision.

While the statute and our agency guidance directs us to identify activities that may affect the habitat features important to black abalone conservation within a specific area in order to determine its eligibility for designation, not all of these activities may be affected by the critical habitat designation (*i.e.,* subject to an ESA section 7 consultation) and sustain an economic impact. It is only those activities with a federal nexus (*i.e.,* actions funded, authorized, or carried out by a Federal agency or agencies) that could sustain an economic impact as a result of the designation. Within the set of activities identified in the ''Special Management Considerations and Protections'' section above, we were only able to estimate economic impacts for a subset of them because of: (1) The limited consultation history; (2) uncertainty in the types of modification that would be required; (3) uncertainty in the number and locations of activities based on currently available data; and (4) the lack of available cost data. The final Economic Analysis Report (NMFS 2011b) analyzes the potential economic impacts to the following categories of activities: (1) Coastal development; (2) in-water construction; (3) sand replenishment or beach nourishment activities; (4) agricultural activities (*e.g.,* irrigation); (5) NPDES-permitted activities and activities generating non-point source pollution; (6) sediment disposal activities associated with road maintenance, repair, and construction (''sidecasting''); and (7) construction and operation of alternative energy hydrokinetic projects (tidal or wave energy projects). The following activities were discussed qualitatively: Dredging and disposal of dredged material; agricultural pesticide application and livestock farming; mineral and petroleum exploration or extraction; construction and operation of LNG projects; construction and operation of desalination plants; oil and chemical spills and response; power generation operations involving water withdrawal from and discharge to marine coastal waters (*e.g.,* coastal power plants with once-through cooling systems); vessel grounding incidents and response; non-native species introduction and management; kelp harvesting; and activities that lead to global climate change. The economic impacts of the designation on these activities could not be quantified because a federal nexus does not exist (*i.e.,* for kelp harvesting activities) or is uncertain (*i.e.,* for activities that lead to global climate change), or because the potential economic impacts are uncertain, for the reasons described above. The final Economic Analysis Report (NMFS 2011b) provides a more detailed description and analysis of the potential economic impacts to each of these categories of activities.

We had sufficient information to monetize the economic benefits of exclusion, but were not able to monetize the conservation benefits of designation. Thus, to weigh the benefits of designation against the economic benefits of exclusion, we compared the conservation value ratings with economic impact ratings that were based on the mid-annualized economic impact estimates (*i.e.,* the midpoint between the low and high annualized economic impact estimates; see final Economic Analysis Report (NMFS 2011b) for additional details) for each specific area. To develop the economic impact ratings, we examined the mid-annualized economic impacts across all of the specific areas. We then divided the economic impacts into four economic impact rating categories corresponding to ''Low'' ($0 to $90,000), ''Medium'' (greater than $90,000 to $400,000), ''High'' (greater than $400,000 to $1 million), and ''Very High'' (greater than $1 million) economic impact ratings. We note that these thresholds differ from the thresholds applied in the proposed rule (*i.e.,* ''Low'' = $0 to $100,000, ''Medium'' = greater than $100,000 to

$500,000), ''High'' = greater than $500,000 to $10 million, and ''Very High'' = greater than $10 million). Revisions made to the economic impacts analysis for power plants and oil and chemical spill response activities resulted in revised economic impact estimates (see Response to Comments 23 and 25). The revised mid-annualized economic impact estimates decreased from a total of about $77 million to about $2 million. As a result, we revised the thresholds, using the same approach as we used in the proposed rule to establish the thresholds. The four economic impact rating categories were determined by examining all of the economic impact values and identifying natural breakpoints in the data where the estimated economic impacts showed a large increase. Because the overall range of mid-annualized economic impact estimates per specific area was low (ranging from $0 to $508,000), we established the threshold for the ''Very High'' economic impact rating based on the highest ''high'' total annualized impact estimate for a specific area (*i.e.,* $1,004,000 for specific area 7). We then balanced these economic impact ratings (representing the benefits of exclusion) with the conservation value ratings (representing the benefits of designation), applying the following decision rules: (1) Areas with a conservation value rating of ''High'' were eligible for exclusion if the mid-annualized economic impact estimate exceeded $1 million (*i.e.,* the economic impact rating was ''Very High''); (2) areas with a conservation value rating of ''Medium'' were eligible for exclusion if the mid-annualized economic impact estimate exceeded $400,000 (*i.e.,* the economic impact rating was at least a ''High''); and (3) areas with a conservation value rating of ''Low'' were eligible for exclusion if the mid-annualized economic impact estimate exceeded $90,000 (*i.e.,* the economic impact rating was at least a ''Medium''). These dollar thresholds should not be interpreted as estimates of the dollar value of High, Medium, or Low conservation value areas.

For critical habitat, the ESA directs us to consider exclusions to avoid high economic impacts, but also requires that the areas designated as critical habitat are sufficient to support the conservation of the species and to avoid extinction. And, under the ESA, the decision to exclude is discretionary. It is within this framework that we developed decision rules with thresholds representing the levels at which we believe the economic benefit of exclusion associated with a specific area should be compared against the conservation benefits of designation. These dollar thresholds and decision rules provided a relatively straightforward process to identify, using the best available data, specific areas warranting consideration for exclusion based on economic impacts.

Based on this analysis, one area was identified preliminarily as eligible for exclusion: Specific area 12, from Corona Del Mar State Beach to Dana Point. We presented the area to the CHRT to help us further characterize the benefits of designation by determining whether excluding this area would significantly impede conservation of black abalone. If exclusion of an area would significantly impede conservation, then the benefits of exclusion would likely not outweigh the benefits of designation for that area. The CHRT considered this question in the context of the information they had developed in providing the conservation value ratings. If the CHRT determined that exclusion of the area would significantly impede conservation of black abalone, the conservation benefits of designation were increased one level in the weighing process. This necessitated the creation of a Very High conservation value rating. Areas rated as ''Very High'' were deemed to have a very high likelihood of promoting the conservation of the species.

The CHRT determined, and we concur, that exclusion of specific area 12 (from Corona Del Mar State Beach to Dana Point) would not significantly impede conservation of black abalone and that the economic benefit of exclusion for this area outweighs the conservation benefit of designation. Based on the CHRT's biological assessment as described below, we also determined that exclusion of specific area 12 will not result in the extinction of black abalone. The CHRT based their determinations on the best available data regarding the present condition of the habitat and black abalone populations in the area. The CHRT gave the area a ''Low'' conservation value, because the current habitat conditions are of lower quality compared to other areas along the coast. While rocky intertidal habitat of good quality occurs within the area, these habitats are patchy and may be affected by sand scour due to the presence of many sandy beaches. In addition, the rocky habitat within the area consists of narrow benches and fewer crevices compared to other areas and has been degraded by the establishment of sandcastle worm (*Phragmatopoma californica*) colonies. There is also little to no coralline algae to provide adequate larval settlement habitat. Low densities of black abalone were observed at a few sites in the area in the 1970s and 1980s. However, no recruitment has been observed and black abalone have been absent from the area except for one black abalone found in January 2010. For these reasons, the CHRT concluded that excluding specific area 12 (from Corona Del Mar State Beach to Dana Point) from the designation would not significantly impede the conservation of black abalone. We also concluded that excluding specific area 12 will not result in the extinction of the species, based on the CHRT's assessment that the area contains habitat of lower quality for black abalone and the lack of evidence to indicate that this area historically supported high densities of black abalone. The estimated economic impact rating for this area was a Medium, with a mid-annualized economic impact estimate of $104,400. Most of the costs for this area were attributed to NPDES-permitted activities, agricultural irrigation, and oil and chemical spill prevention and clean-up. Previously, the economic impact estimate for this specific area included high costs to a proposed desalination plant, based on the costs for using alternate methods of brine disposal (*i.e.,* injection wells). However, based on information provided through public comments, it was determined that the proposed desalination plant plans to dispose of its residual brine by mixing it with wastewater to be discharged through an existing outfall at 1.5 miles offshore. It is uncertain whether there would be effects on black abalone habitat, and thus the costs to this proposed desalination plant were discussed qualitatively rather than quantitatively (*i.e.,* essentially considered as zero costs in the total annualized economic impact estimate).

We note that in the proposed rule, specific area 10 (from Montaña de Oro State Park to just south of Government Point) was eligible for exclusion based on a Very High economic impact rating. However, based on revised economic impact estimates for the DCNPP (see Response to Comment 23 above), the total mid-annualized economic impact estimate for this area decreased from about $75.5 million to about $456,000. Based on this revised economic impact estimate, specific area 10 (rated as a High conservation value area) is no longer eligible for exclusion based on economic impacts.

In summary, we are excluding specific area 12 (from Corona Del Mar State Beach to Dana Point) from the critical habitat designation. Based on the best scientific and commercial data

currently available, we have determined that exclusion of this area will not result in the extinction of the species, because the area contains habitat of low quality for black abalone and historically did not support high densities of black abalone.

Benefits of Exclusion Based on National Security and Final Exclusions

The national security benefits of exclusion are the impacts on national security that would be avoided by excluding particular areas from the designation. We contacted representatives of the DOD to request information on potential national security impacts that may result from the designation of particular areas as critical habitat for black abalone. In a letter dated May 20, 2010 (5090 Ser N40 JJR.cs/0011), representatives of the DOD identified the following particular areas owned or controlled by the U.S. Navy and requested exclusion of these areas from the designation based on potential national security impacts: (1) Naval Auxiliary Landing Field (NALF) San Clemente Island; (2) Outlying Landing Field (OLF) San Nicolas Island; (3) Naval Support Detachment Monterey; (4) Naval Weapons Station Seal Beach; and (5) Naval Base Ventura County (Point Mugu and Port Hueneme). As stated in the proposed rule, we determined that the Naval Support Detachment Monterey, Naval Weapons Station Seal Beach, and Naval Base Ventura County do not occur within the specific areas being considered for designation, but that San Clemente Island and San Nicolas Island do occur within the specific areas being considered for designation.

During the public comment period, we received a comment letter from the U.S. Navy, requesting the exclusion of San Clemente Island from the designation based on national security impacts, as well as based on the forthcoming amendment to the existing San Clemente Island INRMP. As stated in the ''Military Lands'' section above, we have coordinated with the Navy to develop an amendment to the existing 2002 San Clemente Island INRMP to address black abalone protection and conservation. Upon adoption of the amendment to the 2002 San Clemente Island INRMP, we determined under section 4(a)(3)(B) of the ESA that San Clemente Island is no longer eligible for designation, based on the benefits to black abalone conservation under the amended INRMP. Thus, consideration of exclusion based on national security impacts is no longer necessary.

In the comment letter, the Navy did not request exclusion of San Nicolas Island based on national security impacts, instead requesting that San Nicolas Island be found ineligible for designation under section 4(a)(3)(B) of the ESA based on the benefits to black abalone conservation under the revised San Nicolas Island INRMP (see ''Military Lands'' section of this rule). Thus, consideration of exclusion based on national security impacts again is no longer necessary.

Benefits of Exclusion for Other Relevant Impacts

The only other relevant impacts of the designation identified were potential impacts on Indian lands. As stated in the proposed rule, we reviewed maps indicating that none of the specific areas under consideration for designation as critical habitat overlap with Indian lands. We solicited information from the public regarding any Indian lands that may overlap with and may warrant exclusion from the designation, but did not receive any additional information on Indian lands or any other relevant impacts. Therefore, no areas were considered for exclusion based on impacts on Indian lands or any other relevant impacts.

Critical Habitat Designation

This rule designates approximately 360 square kilometers of habitat in California within the geographical area presently occupied by black abalone as critical habitat. These critical habitat areas contain physical or biological features essential to the conservation of the species that may require special management considerations or protection. This rule excludes from the designation the area from Corona Del Mar State Beach to Dana Point, Orange County, CA. Although we have identified three presently unoccupied areas, we are not designating any unoccupied areas as critical habitat at this time, because we do not have sufficient information to determine that any of the unoccupied areas are essential to the conservation of the species.

Lateral Extent of Critical Habitat

The lateral extent of the critical habitat designation offshore is defined by the −6 m depth bathymetry contour relative to the MLLW line and shoreward to the MHHW line. The textual descriptions of critical habitat in the section titled ''226.220 Critical habitat for the black abalone (*Haliotis cracherodii*)'' are the definitive source for determining the critical habitat boundaries. The overview maps provided in the section titled ''226.220 Critical habitat for the black abalone (*Haliotis cracherodii*)'' are provided for general guidance purposes only and not as a definitive source for determining critical habitat boundaries. As discussed in previous critical habitat designations, human activities that occur outside of designated critical habitat can destroy or adversely modify the essential physical and biological features of these areas. This designation will help to ensure that Federal agencies are aware of the impacts that activities occurring inside and outside of the critical habitat area (*e.g.,* coastal development, activities that exacerbate global warming, agricultural irrigation and pesticide application) may have on black abalone critical habitat.

Effects of Critical Habitat Designation

ESA Section 7 Consultation

Section 7(a)(2) of the ESA requires Federal agencies, including NMFS, to ensure that any action authorized, funded, or carried out by the agency (agency action) does not jeopardize the continued existence of any threatened or endangered species or destroy or adversely modify designated critical habitat. When a species is listed or critical habitat is designated, Federal agencies must consult with NMFS on any agency actions to be conducted in an area where the species is present and that may affect the species or its critical habitat. During the consultation, NMFS evaluates the agency action to determine whether the action may adversely affect listed species or critical habitat and issues its findings in a biological opinion. If NMFS concludes in the biological opinion that the agency action would likely result in the destruction or adverse modification of critical habitat, NMFS would also recommend any reasonable and prudent alternatives to the action. Reasonable and prudent alternatives are defined in 50 CFR 402.02 as alternative actions identified during formal consultation that can be implemented in a manner consistent with the intended purpose of the action, that are consistent with the scope of the Federal agency's legal authority and jurisdiction, that are economically and technologically feasible, and that would avoid the destruction or adverse modification of critical habitat. Regulations at 50 CFR 402.16 require Federal agencies that have retained discretionary involvement or control over an action, or where such discretionary involvement or control is authorized by law, to reinitiate consultation on previously reviewed actions in instances where: (1) Critical habitat is subsequently designated; or (2) new information or changes to the

action may result in effects to critical habitat not previously considered in the biological opinion. Consequently, some Federal agencies may request reinitiation of consultation or conference with NMFS on actions for which formal consultation has been completed, if those actions may affect designated critical habitat. Activities subject to the ESA section 7 consultation process include activities on Federal lands and activities on private or state lands requiring a permit from a Federal agency (*e.g.,* a section 10(a)(1)(B) permit from NMFS) or some other Federal action, including funding (*e.g.,* Federal Highway Administration (FHA) or Federal Emergency Management Agency (FEMA) funding). ESA section 7 consultation would not be required for Federal actions that do not affect listed species or critical habitat nor for actions on non-Federal and private lands that are not federally funded, authorized, or carried out.

Activities Likely To Be Affected

ESA section 4(b)(8) requires, to the maximum extent practicable, in any regulation to designate critical habitat, an evaluation and brief description of those activities (whether public or private) that may adversely modify such habitat or that may be affected by such designation. A wide variety of activities may affect black abalone critical habitat and may be subject to the ESA section 7 consultation process when carried out, funded, or authorized by a Federal agency. The activities most likely to be affected by this critical habitat designation are: (1) Coastal development; (2) in-water construction; (3) sand replenishment or beach nourishment activities; (4) agricultural activities (*e.g.,* irrigation); (5) NPDES-permitted activities and activities generating non-point source pollution; (6) sediment disposal activities associated with road maintenance, repair, and construction (sidecasting); (7) oil and chemical spills and clean-up activities; (8) construction and operation of power plants that take in and discharge water from the ocean; (9) construction and operation of alternative energy hydrokinetic projects (tidal or wave energy projects); and (10) construction and operation of desalination plants. Private entities may also be affected by this critical habitat designation if a Federal permit is required or Federal funding is received. These activities would need to be evaluated with respect to their potential to destroy or adversely modify critical habitat. Changes to the actions to minimize or avoid destruction or adverse modification of designated critical habitat may result in changes to some activities. Please see the final Economic Analysis Report (NMFS 2011b) for more details and examples of changes that may need to occur in order for activities to minimize or avoid destruction or adverse modification of designated critical habitat. Questions regarding whether specific activities would constitute destruction or adverse modification of critical habitat should be directed to NMFS (see **ADDRESSES** and **FOR FURTHER INFORMATION CONTACT**).

Peer Review

On December 16, 2004, the Office of Management and Budget (OMB) issued its Final Information Quality Bulletin for Peer Review (Bulletin). The Bulletin was published in the **Federal Register** on January 14, 2005 (70 FR 2664), and went into effect on June 16, 2005. The primary purpose of the Bulletin is to improve the quality and credibility of scientific information disseminated by the Federal government by requiring peer review of ''influential scientific information'' and ''highly influential scientific information'' prior to public dissemination. Influential scientific information is defined as ''information the agency reasonably can determine will have or does have a clear and substantial impact on important public policies or private sector decisions.'' The Bulletin provides agencies broad discretion in determining the appropriate process and level of peer review. Stricter standards were established for the peer review of ''highly influential scientific assessments,'' defined as information whose ''dissemination could have a potential impact of more than $500 million in any one year on either the public or private sector or that the dissemination is novel, controversial, or precedent-setting, or has significant interagency interest.'' The final Biological Report and final Economic Analysis Report supporting this rule to designate critical habitat for the black abalone are considered influential scientific information and subject to peer review. These two reports were each distributed to three independent peer reviewers for review during the public comment period. The peer reviewer comments were compiled into a peer review report and are available on the Federal eRulemaking Portal Web site (see **ADDRESSES**).

Required Determinations

Regulatory Planning and Review (E.O. 12866)

This rule has been determined to be significant for purposes of Executive Order (E.O.) 12866. A final Economic Analysis Report and ESA Section 4(b)(2) Report have been prepared to support the exclusion process under section 4(b)(2) of the ESA and our consideration of alternatives to this rulemaking as required under E.O. 12866. The reports are available on the Southwest Region Web site at *http://swr.nmfs.noaa.gov/abalone*, on the Federal eRulemaking Web site at *http://www.regulations.gov*, or upon request (see **ADDRESSES**).

Regulatory Flexibility Act (5 U.S.C. 601 et seq.)

Under the Regulatory Flexibility Act (RFA) (5 U.S.C. 601 *et seq.,* as amended by the Small Business Regulatory Enforcement Fairness Act (SBREFA) of 1996), whenever an agency publishes a notice of rulemaking for any proposed or final rule, it must prepare and make available for public comment a regulatory flexibility analysis describing the effects of the rule on small entities (*i.e.,* small businesses, small organizations, and small government jurisdictions). We have prepared a final regulatory flexibility analysis (FRFA), which is part of the final Economic Analysis Report (NMFS 2011b). This document is available upon request (see **ADDRESSES**), via our Web site at *http://swr.nmfs.noaa.gov*, or via the Federal eRulemaking Web site at *http://www.regulations.gov*.

In summary, the FRFA did not consider all types of small businesses that could be affected by the black abalone critical habitat designation due to lack of information needed to identify the number of potentially affected small businesses for each activity type and to conduct a quantitative analysis of the costs for small businesses of each activity type. Impacts to small businesses involved in 8 activities were considered: (1) In-Water construction; (2) dredging and disposal of dredged material; (3) NPDES-permitted facilities that discharge water into or adjacent to the coastal marine environment; (4) coastal urban development; (5) agriculture (including pesticide use, irrigation, and livestock farming); (6) construction and operation of tidal and wave energy projects; (7) construction and operation of LNG projects; and (8) mineral and petroleum exploration and extraction. The FRFA estimates the potential number of small businesses that may be affected by this rule, and the average annualized impact per entity for a given area and activity type. Specifically, based on an examination of the North American Industry Classification System (NAICS), this analysis classifies the potentially affected economic activities into

industry sectors and provides an estimate of the number of small businesses affected in each sector based on the applicable NAICS codes. We were only able to identify NAICS codes for the 8 activity types listed above.

The specific areas considered for designation as critical habitat, and hence the action area for this rule, span from the Del Mar Landing Ecological Reserve to Dana Point in California, including several offshore islands. Although the areas of concern include marine areas off the coast, the small business analysis is focused on land based areas where most economic activities occur and which could be affected by the designation.

Ideally, this analysis would directly identify the number of small entities that are located within the coastal areas adjacent to the specific areas. However, it is not possible to directly determine the number of firms in each industry sector within these areas because business activity data is maintained at the county level. Therefore, this analysis provides a maximum number of small businesses that could be affected. This number is most likely inflated since all of the identified small businesses are unlikely to be located in close proximity to the specific areas.

After determining the number of small entities, this analysis estimates the impact per entity for each area and industry sector. The following steps were used to provide these estimates: (1) Total impact for every area and activity type was determined based on the results presented in the final Economic Analysis Report (NMFS 2011b); (2) the proportion of businesses that were small was calculated for every area for every activity type; (3) the impact to small businesses for every area and activity type was estimated by multiplying the total impacts estimated for all businesses with the proportion of businesses that were determined to be small; and (4) the average impact per small businesses was estimated by taking the ratio of the total estimated impacts to the total number of small businesses.

There is a maximum of 3,560 small businesses involved in activities most likely to be affected by this rule. This is based on the assumption that all small businesses counted across areas and activity types are separate entities. However, it is likely that a particular small business may appear multiple times as being affected by conservation measures for multiple areas and activity types. Hence, total small business estimates across areas and activity types are likely to be overestimated. The potential annualized impacts borne by small entities were highest for specific area 3 (Farallon Islands) with potential impacts estimated at $194,000. This was mainly due to the impacts on the NPDES-permitted facilities, which account for 100 percent of the total costs. It is important to note here that these costs are likely overestimated, due to the fact that the spatial scope for analyzing the impacts of the designation on NPDES-permitted facilities for specific area 3 included NPDES-permitted facilities in the counties surrounding San Francisco Bay (see Section 1.4.1 of the final economic analysis report). Specific areas 2, 3, 4, 11, and 19 each had total estimated annualized small business impacts between $100,000 to $200,000.

In accordance with the requirements of the RFA (as amended by SBREFA of 1996), this analysis considered various alternatives to the critical habitat designation for the black abalone. The alternative of not designating critical habitat for the black abalone was considered and rejected because such an approach does not meet the legal requirements of the ESA. We considered the alternative of designating all specific areas (*i.e.,* no areas excluded). The total estimated annualized economic impact (for all potentially affected entities) associated with this alternative ranged from $169,000 to $4,083,000. However, the benefits of excluding specific area 12 (Corona Del Mar to Dana Point) outweighed the benefits of including it in the designation. Thus, NMFS also considered the alternative of designating all specific areas, but excluding specific area 12. The total estimated annualized economic impact (for all potentially affected entities) associated with this alternative ranged from $158,000 to $3,886,000. This alternative helps to reduce the number of small businesses potentially affected from 3,509 to 3,060. The total potential annualized economic impact to small businesses is also reduced from $817,000 to $789,000.

E.O. 13211

On May 18, 2001, the President issued an Executive Order on regulations that significantly affect energy supply, distribution, and use. E.O. 13211 requires agencies to prepare Statements of Energy Effects when undertaking an action expected to lead to the promulgation of a final rule or regulation that is a significant regulatory action under E.O. 12866 and is likely to have a significant adverse effect on the supply, distribution, or use of energy. An energy impacts analysis was prepared under E.O. 13211 and is available as part of the final Economic Analysis Report (NMFS 2011b). The results of the analysis are summarized here.

The Office of Management and Budget (OMB) provides guidance for implementing this Executive Order, outlining nine outcomes that may constitute ''a significant adverse effect'' when compared with the regulatory action under consideration: (1) Reductions in crude oil supply in excess of 10,000 barrels per day (bbls); (2) reductions in fuel production in excess of 4,000 bbls; (3) reductions in coal production in excess of 5 million tons per year; (4) reductions in natural gas production in excess of 25 million cubic feet per year; (5) reductions in electricity production in excess of 1 billion kilowatts-hours per year or in excess of 500 megawatts of installed capacity; (6) increases in energy use required by the regulatory action that exceed the thresholds above; (7) increases in the cost of energy production in excess of one percent; (8) increases in the cost of energy distribution in excess of one percent; or (9) other similarly adverse outcomes.

Of these, the most relevant criteria to this analysis are potential changes in natural gas and electricity production, as well as changes in the cost of energy production. Possible energy impacts may occur as the result of requested project modifications to power plants, tidal and wave energy projects, and LNG facilities. There is currently only one power plant, the Diablo Canyon Nuclear Power Plant (DCNPP), located within an area that could be affected by black abalone critical habitat. As described previously, the high level of baseline protections provided under the CWA make it highly unlikely that additional modifications beyond those required under existing regulations would result due to this black abalone critical habitat designation. Therefore, we concluded that this designation is not likely to result in incremental impacts to the cost of operating the DCNPP and, consequently, is not likely to result in impacts to energy production and associated costs.

The number of future tidal and wave energy projects that will be constructed within the specific areas is unknown. Currently, there are no actively-generating wave or tidal energy projects located within the study area. However, four projects have received preliminary permits from FERC (FERC. Issued and valid hydrokinetic projects preliminary permit. Accessed at: *http://www.ferc.gov/industries/hydropower/indus-act/hydrokinetics/permits-issued.xls* on April 5, 2010). Future management and required project modifications for black abalone critical

habitat related to tidal and wave energy projects are uncertain and could vary widely in scope from project to project. Moreover, because the proposed projects are still in the preliminary stages, the potential impact of possible black abalone conservation efforts on the project's energy production and the associated cost of that energy are unclear. Proposed tidal and wave energy projects within the study area have a combined production capacity of 21 megawatts. It is more likely that any additional cost of black abalone conservation efforts would be passed on to the consumer in the form of slightly higher energy prices. That said, any increase in energy prices as a result of black abalone conservation would have to be balanced against changes in energy prices resulting from the development of these projects. That is, the construction of tidal and wave energy projects may result in a general reduction in energy prices in affected areas. Without information about the effect of the tidal and wave projects on future electricity prices and more specific information about recommended conservation measures for black abalone, this analysis is unable to forecast potential energy impacts resulting from changes to tidal and wave energy projects.

Similar to tidal and wave energy projects, the number of future LNG projects that will be built within the specific areas is unknown. Many LNG projects are likely to be abandoned during the development stages for reasons unrelated to black abalone critical habitat. In addition, the potential impact of LNG facilities on black abalone habitat remains uncertain, as is the nature of any project modifications that might be requested to mitigate adverse impacts. Since there are no LNG projects in the development stage, the potential impact of possible black abalone conservation efforts on the project's energy production and the associated cost of that energy are unclear. Project modifications may include biological monitoring, spatial restrictions on project installation, and specific measures to prevent or respond to catastrophes. Out of these project modifications, spatial restrictions on project installation could have effects on energy production. This modification could increase LNG construction costs, which may result in higher natural gas costs. However, the construction of LNG facilities and associated increased energy supplies to consumers aim to generally result in lower energy prices than would have otherwise been expected. Therefore, this analysis is unable to forecast potential energy impacts resulting from changes to LNG projects without specific information about recommended black abalone conservation measures or future forecasts of energy prices that reflect future markets with increased energy supplies from LNG projects.

Unfunded Mandates Reform Act (2 U.S.C. 1501 et seq.)

In accordance with the Unfunded Mandates Reform Act, NMFS makes the following findings:

(A) This final rule would not produce a Federal mandate. In general, a Federal mandate is a provision in legislation, statute, or regulation that would impose an enforceable duty upon State, local, tribal governments, or the private sector and includes both ''Federal intergovernmental mandates'' and ''Federal private sector mandates.'' These terms are defined in 2 U.S.C. 658(5)–(7). ''Federal intergovernmental mandate'' includes a regulation that ''would impose an enforceable duty upon State, local, or tribal governments'' with two exceptions. It excludes ''a condition of Federal assistance.'' It also excludes ''a duty arising from participation in a voluntary Federal program,'' unless the regulation ''relates to a then-existing Federal program under which $500,000,000 or more is provided annually to State, local, and tribal governments under entitlement authority,'' if the provision would ''increase the stringency of conditions of assistance'' or ''place caps upon, or otherwise decrease, the Federal Government's responsibility to provide funding'' and the State, local, or tribal governments ''lack authority'' to adjust accordingly. ''Federal private sector mandate'' includes a regulation that ''would impose an enforceable duty upon the private sector, except (i) a condition of Federal assistance; or (ii) a duty arising from participation in a voluntary Federal program.'' The designation of critical habitat does not impose an enforceable duty on non-Federal government entities or private parties. The only regulatory effect of a critical habitat designation is that Federal agencies must ensure that their actions do not destroy or adversely modify critical habitat under ESA section 7. Non-Federal entities that receive funding, assistance, or permits from Federal agencies, or otherwise require approval or authorization from a Federal agency for an action may be indirectly affected by the designation of critical habitat. Furthermore, to the extent that non-Federal entities are indirectly impacted because they receive Federal assistance or participate in a voluntary Federal aid program, the Unfunded Mandates Reform Act would not apply, nor would critical habitat shift the costs of the large entitlement programs listed above to state governments.

(B) Due to the prohibition against take of black abalone both within and outside of the designated areas, we do not anticipate that this final rule would significantly or uniquely affect small governments. As such, a Small Government Agency Plan is not required.

Takings

Under E.O. 12630, Federal agencies must consider the effects of their actions on constitutionally protected private property rights and avoid unnecessary takings of property. A taking of property includes actions that result in physical invasion or occupancy of private property, and regulations imposed on private property that substantially affect its value or use. In accordance with E.O. 12630, this final rule would not have significant takings implications. A takings implication assessment is not required. The designation of critical habitat affects only Federal agency actions. This final rule would not increase or decrease the current restrictions on private property concerning take of black abalone, nor do we expect the critical habitat designation to impose substantial additional burdens on land use or substantially affect property values. Additionally, the critical habitat designation would not preclude the development of Habitat Conservation Plans and issuance of incidental take permits for non-Federal actions. Owners of areas included within the critical habitat designation would continue to have the opportunity to use their property in ways consistent with the survival of endangered black abalone.

Federalism

In accordance with E.O. 13132, we determined that this final rule would not have significant Federalism effects and that a Federalism assessment is not required. This designation may have some benefit to state and local resource agencies in that the areas essential to the conservation of the species are more clearly defined, and the PCEs of the habitat necessary for the survival of black abalone are specifically identified. While this designation would not alter where and what non-federally sponsored activities may occur, it may assist local governments in long-range planning.

Civil Justice Reform

In accordance with E.O. 12988, we have determined that this final rule would not unduly burden the judicial system and meets the requirements of sections 3(a) and 3(b)(2) of the E.O. We are designating critical habitat in accordance with the provisions of the ESA. This final rule uses standard property descriptions and identifies the PCEs within the designated areas to assist the public in understanding the habitat needs of black abalone.

Paperwork Reduction Act of 1995 (44 U.S.C. 3501 et seq.)

This final rule does not contain new or revised information collections that require approval by the OMB under the Paperwork Reduction Act. This final rule would not impose recordkeeping or reporting requirements on State or local governments, individuals, businesses, or organizations.

National Environmental Policy Act of 1969 (NEPA)

We have determined that an environmental analysis as provided for under the NEPA of 1969 for critical habitat designations made pursuant to the ESA is not required. See *Douglas County* v. *Babbitt,* 48 F.3d 1495 (9th Cir. 1995), cert. denied, 116 S.Ct 698 (1996).

Coastal Zone Management Act of 1972 (CZMA)

The CZMA emphasizes the primacy of state decision-making regarding the coastal zone. Section 307 of the CZMA (16 U.S.C. 1456), called the Federal consistency provision, is a major incentive for states to join the national coastal management program and is a powerful tool that states use to manage coastal uses and resources and to facilitate cooperation and coordination with federal agencies.

Federal consistency is the CZMA requirement where Federal agency activities that have reasonably foreseeable effects on any land or water use or natural resource of the coastal zone (also referred to as coastal uses or resources and coastal effects) must be consistent to the maximum extent practicable with the enforceable policies of a coastal state's federally approved coastal management program. We have determined that this final critical habitat designation is consistent to the maximum extent practicable with the enforceable policies of the approved Coastal Zone Management Program of California. This determination was submitted for review by the California Coastal Commission.

Government-to-Government Relationship With Tribes

As described in the section above titled ''Exclusions Based on Other Relevant Impacts,'' we have not identified any tribal lands that overlap with the critical habitat designation for black abalone.

References Cited

A complete list of all references cited herein is available upon request (see **ADDRESSES** section) or via our Web site at *http://swr.nmfs.noaa.gov/abalone*.

List of Subjects in 50 CFR Part 226

Endangered and threatened species.

Dated: October 18, 2011.

John Oliver,

Deputy Assistant Administrator for Operations, National Marine Fisheries Service.

For the reasons set out in the preamble, 50 CFR part 226 is amended as set forth below:

PART 226—DESIGNATED CRITICAL HABITAT

■ 1. The authority citation of part 226 continues to read as follows:

Authority: 16 U.S.C. 1533.

■ 2. Add § 226.221 to read as follows:

§ 226.221 Critical habitat for black abalone (Haliotis cracherodii).

Critical habitat is designated for black abalone as described in this section. The textual descriptions of critical habitat in this section are the definitive source for determining the critical habitat boundaries. The overview maps are provided for general guidance purposes only and not as a definitive source for determining critical habitat boundaries.

(a) *Critical habitat boundaries*—(1) *Coastal Marine Areas:* The critical habitat designation for black abalone within each coastal marine area below along the California coast is defined by four latitude and longitude coordinates that set the northern and southern boundaries, as well as by bathymetric specifications that set the shoreward and seaward boundaries. The northern boundary is the straight line between the northern coordinates and the southern boundary is the straight line between the southern coordinates, extending out as far as the seaward boundary, defined by the −6 m depth bathymetry line (relative to mean lower low water (MLLW)), and the shoreward boundary, defined by the line that marks mean higher high water (MHHW). Critical habitat only includes rocky intertidal and subtidal habitats within these areas from the MHHW line to a depth of −6 m relative to MLLW, as well as the marine waters above the rocky habitats.

(i) *Del Mar Landing Ecological Reserve in Sonoma County to Point Bonita in Marin County, California:* northern coordinates: 38°44′25.04″ N, 123°30′52.067″ W and 38°44′25.948″ N, 123°30′19.175″ W; southern coordinates: 37°49′3.404″ N, 122°31′56.339″ W and 37°49′3.082″ N, 122°31′50.549″ W.

(ii) *South of San Francisco Bay in San Francisco County to Natural Bridges State Beach in Santa Cruz County, California:* northern coordinates: 37°47′17.078″ N, 122°31′13.59″ W and 37°47′17.524″ N, 122°30′21.458″ W; southern coordinates: 36°57′11.547″ N, 121°58′36.276″ W and 36°57′15.208″ N, 121°58′31.424″ W.

(iii) *Pacific Grove in Monterey County to Cayucos in San Luis Obispo County, California:* northern coordinates: 36°36′41.16″ N, 121°53′30.453″ W and 36°36′41.616″ N, 121°53′47.763″ W; southern coordinates: 35°26′22.887″ N, 120°54′6.264″ W and 35°26′23.708″ N, 120°53′39.427″ W.

(iv) *Montaña de Oro State Park in San Luis Obispo County, California to just south of Government Point in Santa Barbara County, California:* northern coordinates: 35°17′15.72″ N, 120°53′30.537″ W and 35°17′15.965″ N, 120°52′59.583″ W; southern coordinates: 34°27′12.95″ N, 120°22′10.341″ W and 34°27′25.11″ N, 120°22′3.731″ W.

(v) *Palos Verdes Peninsula extending from the Palos Verdes/Torrance border to Los Angeles Harbor in southwestern Los Angeles County, California:* northern coordinates: 33°48′22.604″ N, 118°24′3.534″ W and 33°48′22.268″ N, 118°23′35.504″ W; southern coordinates: 33°42′10.303″ N, 118°16′50.17″ W and 33°42′25.816″ N, 118°16′41.059″ W.

(2) *Coastal Offshore Islands:* The black abalone critical habitat areas surrounding the coastal offshore islands listed below are defined by a seaward boundary that extends offshore to the −6m depth bathymetry line (relative to MLLW), and a shoreward boundary that is the line marking MHHW. Critical habitat only includes rocky intertidal and subtidal habitats from MHHW to a depth of −6 m relative to MLLW, including the marine waters above the rocky substrate.

(i) *Farallon Islands, San Francisco County, California.*

(ii) *Año Nuevo Island, San Mateo County, California.*

(iii) *San Miguel Island, Santa Barbara County, California.*

(iv) *Santa Rosa Island, Santa Barbara County, California.*

(v) *Santa Cruz Island, Santa Barbara County, California.*

(vi) *Anacapa Island, Ventura County, California.*

(vii) *Santa Barbara Island, Santa Barbara County, California.*

(viii) *Santa Catalina Island, Los Angeles County, California.*

(b) *Primary constituent elements.* The primary constituent elements essential for the conservation of the black abalone are:

(1) *Rocky substrate.* Suitable rocky substrate includes rocky benches formed from consolidated rock of various geological origins (e.g., igneous, metamorphic, and sedimentary) that contain channels with macro- and micro-crevices or large boulders (greater than or equal to 1 m in diameter) and occur from MHHW to a depth of −6 m relative to MLLW. All types of relief (high, medium and low; 0.5 to greater than 2 m vertical relief) support black abalone.

(2) *Food resources.* Abundant food resources including bacterial and diatom films, crustose coralline algae, and a source of detrital macroalgae, are required for growth and survival of all stages of black abalone. The primary macroalgae consumed by juvenile and adult black abalone are giant kelp (*Macrocystis pyrifera)* and feather boa kelp (*Egregia menziesii)* in southern California (i.e., south of Point Conception) habitats, and bull kelp (*Nereocystis leutkeana)* in central and northern California habitats (i.e., north of Santa Cruz), although *Macrocystis* and *Egregia* may be more prominent in the habitat and diet in areas south of Santa Cruz. Southern sea palm (*Eisenia arborea),* elk kelp (*Pelagophycus porra),* stalked kelp (*Pterygophora californica),* and other brown kelps (*Laminaria sp.*) may also be consumed by black abalone.

(3) *Juvenile settlement habitat.* Rocky intertidal and subtidal habitat containing crustose coralline algae and crevices or cryptic biogenic structures (e.g., urchins, mussels, chiton holes, conspecifics, anemones) is important for successful larval recruitment and juvenile growth and survival of black abalone less than approximately 25 mm shell length. Adult abalone may facilitate larval settlement and metamorphosis by grazing down algal competitors and thereby promoting the maintenance of substantial substratum cover by crustose coralline algae, outcompeting encrusting sessile invertebrates (e.g. tube worms and tube snails) for space and thereby promoting the maintenance of substantial substratum cover by crustose coralline algae as well as creating space for settling abalone, and emitting chemical cues that may induce settlement of abalone larvae.

(4) *Suitable water quality.* Suitable water quality includes temperature (i.e., tolerance range: 12 to 25 °C; optimal range: 18 to 22 °C), salinity (i.e., 30 to 35 ppt), pH (i.e., 7.5 to 8.5), and other chemical characteristics necessary for normal settlement, growth, behavior, and viability of black abalone.

(5) *Suitable nearshore circulation patterns.* Suitable circulation patterns are those that retain eggs, sperm, fertilized eggs, and ready-to-settle larvae within 100 km from shore so that successful fertilization and settlement to shallow intertidal habitat can take place.

(c) Overview maps of black abalone critical habitat follow:

BILLING CODE 3510–22–P

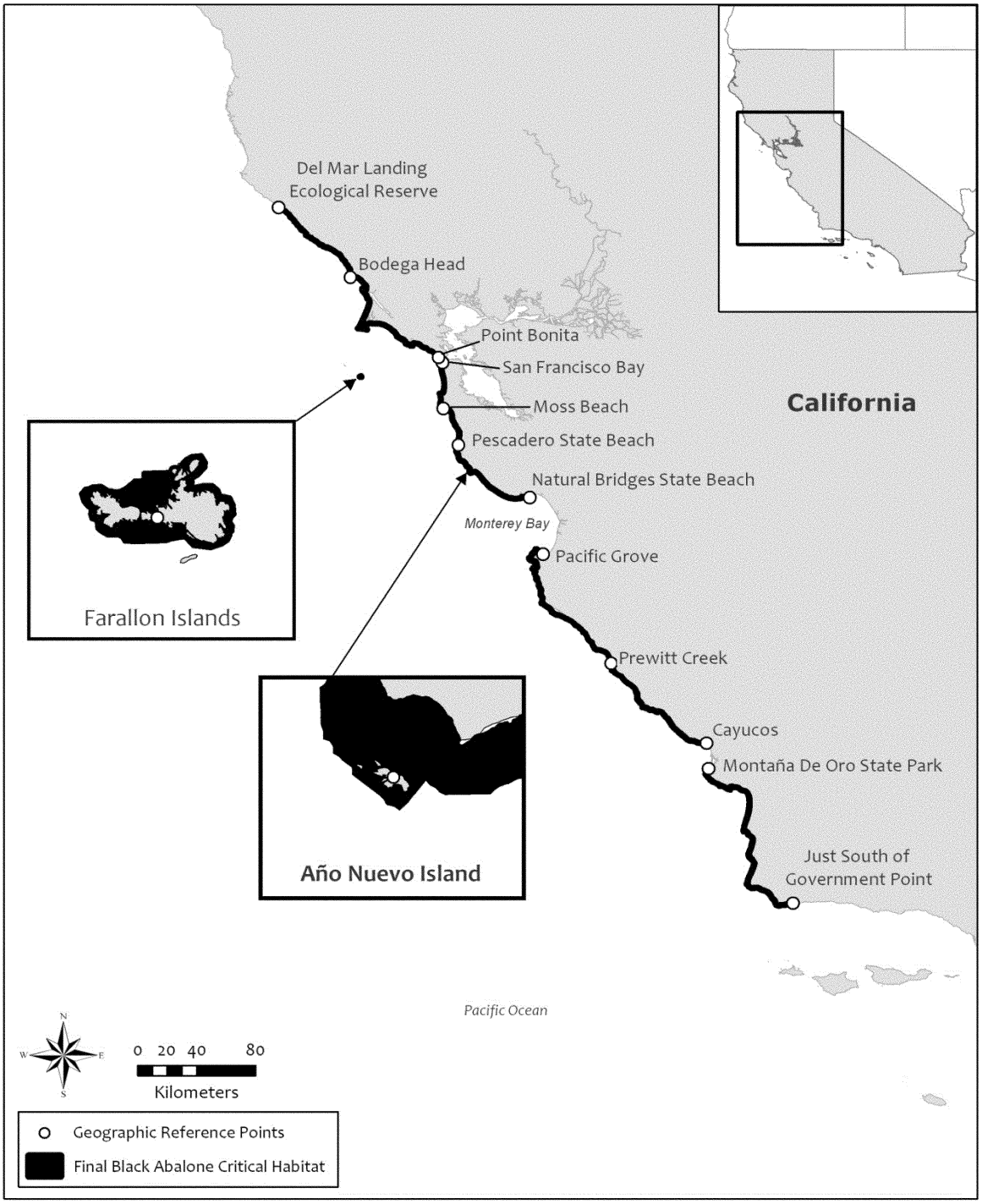
Del Mar Landing
Ecological Reserve
Bodega Head
Point Bonita
San Francisco Bay
Moss Beach
Pescadero State Beach
Natural Bridges State Beach
Monterey Bay
Pacific Grove
Prewitt Creek
Cayucos
Montaña De Oro State Park
Just South of
Government Point
California
Farallon Islands
Año Nuevo Island
Pacific Ocean
N
W
E
S
0 20 40 80
Kilometers
Geographic Reference Points
Final Black Abalone Critical Habitat

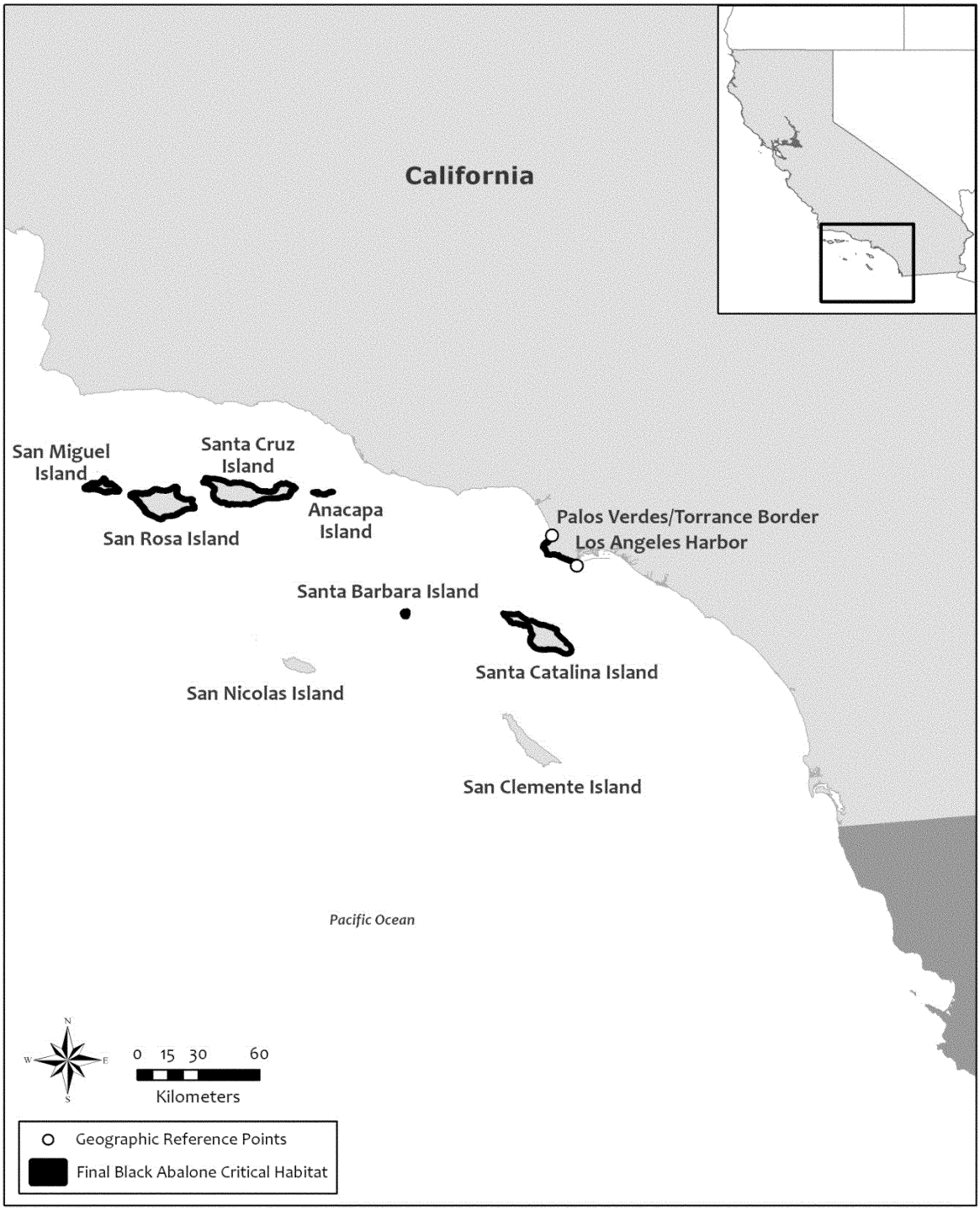

[FR Doc. 2011–27376 Filed 10–26–11; 8:45 am]
BILLING CODE 3510–22–C

FEDERAL REGISTER

Vol. 76 Thursday,

No. 208 October 27, 2011

Part IV

The President

Proclamation 8740—United Nations Day, 2011

Federal Register
Vol. 76, No. 208
Thursday, October 27, 2011

Presidential Documents

Title 3—

The President

Proclamation 8740 of October 24, 2011

United Nations Day, 2011

By the President of the United States of America

A Proclamation

In 1945, 51 nations in a world shaken by war signed the Charter of the United Nations. Determined to move beyond an era of violence and uncertainty, these pioneers aimed to prevent conflict by addressing its causes. Today, the United Nations provides a forum to seek lasting peace by mediating international disputes, advancing human rights, and fostering global cooperation. On United Nations Day, we join our 192 fellow member states in celebrating the founding ideals of the Charter, and we recommit to the global pursuit of peace, justice, and human dignity.

Built out of the ashes of war and genocide, the United Nations emerged as a vehicle for human progress. Recognizing the power and virtue of working in concert, the founders of this institution set out to mend the wounds caused by World War II, embrace peace over chaos, and lay the foundation for global cooperation on shared goals. Now, as the fates of nations become ever more intertwined, the leadership, staff, and member states of the United Nations continue to play an essential role in addressing global issues—from public health and economic development to climate change, transnational terrorism, and nuclear proliferation.

Extraordinary events have reminded the world that the collective action of ordinary citizens can lead the march toward liberty and justice. At a time of dramatic political transformation, the United Nations can embrace democratic movements and stand beside those who reject tyranny and oppression and look to the promise of freedom and prosperity. Together, we will help realize the aspirations of peoples long denied the opportunity to achieve their dreams.

The men and women who created the United Nations understood that peace is not simply the absence of war. The global community must continue not only to promote stability, but also defend the right of all peoples to live free and the right of all nations to chart their own course. The United States, working in and with the United Nations, will never accept a flawed status quo, but will pursue with vigor the world as we know it can be.

NOW, THEREFORE, I, BARACK OBAMA, President of the United States of America, by virtue of the authority vested in me by the Constitution and the laws of the United States, do hereby proclaim October 24, 2011, as United Nations Day. I urge the Governors of the 50 States, and the officials of all other areas under the flag of the United States, to observe United Nations Day with appropriate ceremonies and activities.

IN WITNESS WHEREOF, I have hereunto set my hand this twenty-fourth day of October, in the year of our Lord two thousand eleven, and of the Independence of the United States of America the two hundred and thirty-sixth.

[FR Doc. 2011–28050
Filed 10–26–11; 11:15 am]
Billing code 3295–F2–P

Reader Aids

Federal Register

Vol. 76, No. 208

Thursday, October 27, 2011

CUSTOMER SERVICE AND INFORMATION

Federal Register/Code of Federal Regulations	
General Information, indexes and other finding aids	**202–741–6000**
Laws	**741–6000**
Presidential Documents	
Executive orders and proclamations	**741–6000**
The United States Government Manual	**741–6000**
Other Services	
Electronic and on-line services (voice)	**741–6020**
Privacy Act Compilation	**741–6064**
Public Laws Update Service (numbers, dates, etc.)	**741–6043**
TTY for the deaf-and-hard-of-hearing	**741–6086**

ELECTRONIC RESEARCH

World Wide Web

Full text of the daily Federal Register, CFR and other publications is located at: **www.fdsys.gov.**

Federal Register information and research tools, including Public Inspection List, indexes, and links to GPO Access are located at: **www.ofr.gov.**

E-mail

FEDREGTOC-L (Federal Register Table of Contents LISTSERV) is an open e-mail service that provides subscribers with a digital form of the Federal Register Table of Contents. The digital form of the Federal Register Table of Contents includes HTML and PDF links to the full text of each document.

To join or leave, go to **http://listserv.access.gpo.gov** and select *Online mailing list archives, FEDREGTOC-L, Join or leave the list (or change settings);* then follow the instructions.

PENS (Public Law Electronic Notification Service) is an e-mail service that notifies subscribers of recently enacted laws.

To subscribe, go to **http://listserv.gsa.gov/archives/publaws-l.html** and select *Join or leave the list (or change settings);* then follow the instructions.

FEDREGTOC-L and **PENS** are mailing lists only. We cannot respond to specific inquiries.

Reference questions. Send questions and comments about the Federal Register system to: **fedreg.info@nara.gov**

The Federal Register staff cannot interpret specific documents or regulations.

Reminders. Effective January 1, 2009, the Reminders, including Rules Going Into Effect and Comments Due Next Week, no longer appear in the Reader Aids section of the Federal Register. This information can be found online at **http://www.regulations.gov.**

CFR Checklist. Effective January 1, 2009, the CFR Checklist no longer appears in the Federal Register. This information can be found online at **http://bookstore.gpo.gov/.**

FEDERAL REGISTER PAGES AND DATE, OCTOBER

61033–61248 3
61249–61554 4
61555–61932 5
61933–62280 6
62281–62596 7
62597–63148 11
63149–63536 12
63537–63816 13
63817–64000 14
64001–64228 17
64229–64780 18
64781–65094 19
65095–65356 20
65357–65608 21
65609–65926 24
65927–66168 25
66169–66600 26
66601–66848 27

CFR PARTS AFFECTED DURING OCTOBER

At the end of each month the Office of the Federal Register publishes separately a List of CFR Sections Affected (LSA), which lists parts and sections affected by documents published since the revision date of each title.

3 CFR

Proclamations:
8723 62283
8724 62285
8725 62287
8726 62289
8727 62291
8728 62293
8729 62295
8730 63529
8731 63531
8732 63803
8733 63805
8734 63807
8735 63809
8736 63999
8737 65095
8738 65097
8739 65099
8740 66847

Executive Orders:
13585 62281
13586 63533
13587 63811

Administrative Orders:
Memorandums:
Memorandum of September 28, 2011 61247
Presidential Determination No. 2011–17 of September 30, 2011 62597
Presidential Determination No. 2011–18 of September 30, 2011 62599
Presidential Determination No. 2012–01 of October 4, 2011 65927
Notices:
Notice of October 19, 2011 65355
Notice of October 25, 2011 66599

5 CFR

1201 63537

Proposed Rules:
Ch. XXXVI 63206

6 CFR

Proposed Rules:
31 62311

7 CFR

2 66601
6 63538
52 64001
319 .....63149, 65933
906 61249
916 66602
917 66602
930 65357
953 65360
985 61933
Ch. XXV 66169

Proposed Rules:
319 .....65976, 65985, 65988
331 .....61228, 62312
810 61287
999 65411
1435 64839
1700 63846
2502 66656

8 CFR

Proposed Rules:
100 61622
216 61288
245 61288

9 CFR

56 65935
77 .....61251, 61253
78 65935

Proposed Rules:
71 .....62313, 63210
77 .....62313, 63210
78 .....62313, 63210
90 .....62313, 63210
121 .....61228, 62312

10 CFR

50 63541
52 63541
429 65362
431 65362
1021 63764

Proposed Rules:
26 61625
50 63565
430 .....61999, 62644, 63211, 65616, 65631, 65633
431 .....61288, 63566
810 65634

11 CFR

104 61254
109 61254

Proposed Rules:
110 63567
111 63570

12 CFR

309 63817
310 63817

Proposed Rules:
204 64250
210 64259
1310 64264

13 CFR

108 63542
120 ....63151, 63542
123 63542
125 63542

Proposed Rules:

121 ....61626, 62313, 63216, 63510
124 62313
125 ....61626, 62313
126 62313
127 62313

14 CFR

21 64229
23 65101
25 ....62603, 63818, 63822, 63823, 65103, 65105
39 ....61033, 61036, 61255, 61555, 61558, 61559, 61561, 62605, 63156, 63159, 63161, 63163, 63167, 63169, 63172, 63177, 64001, 64003, 64781, 64785, 64788, 64791, 64793 64795, 64798, 64801, 65936, 65938, 65941, 66606, 66609, 66613, 66615, 66617, 66618, 66620, 66623
61 63183
71 ....61257, 61258, 64233, 64234, 64235, 64236, 65106, 65944, 65945, 66178
73 64003
97 ....61038, 61040, 64005, 64006, 65951, 66179

Proposed Rules:

21 61999
25 ....63851, 66660
39 ....61633, 61638, 61641, 61643, 61645, 62321, 62649, 62653, 62656, 62658, 62661, 62663, 62667, 62669, 62671, 62673, 63229, 63571, 64038, 64283, 64285, 64287, 64289, 64291, 64293, 64844, 64847, 64849, 64851, 64854, 64857, 65136, 65419, 65421, 65991, 65995, 65997, 66198, 66200, 66203, 66205, 66207, 66209
43 64859
71 ....63235, 64041, 64295, 66662

15 CFR

744 63184
774 66181
922 63824

Proposed Rules:

922 65566

16 CFR

2 63833
1450 62605

Proposed Rules:

Ch. II 62678, 64865
1700 64042

17 CFR

12 63187

Proposed Rules:

Ch. 1 65999
229 63573
240 65784
249 ....63573, 65784

18 CFR

Proposed Rules:

35 66211
40 ....66220, 66229

19 CFR

10 65365
24 65365
162 ....65365, 65953
163 ....65365, 65953
178 65365
201 61937
206 61937
207 61937
210 ....61937, 64803
351 61042

Proposed Rules:

Ch. II 66004

20 CFR

404 ....65107, 65366
408 65107
416 ....65107, 65366
422 65107

Proposed Rules:

404 66006

21 CFR

Ch. I 61565
165 64810
558 65109
1300 64813
1301 61563
1304 64813
1306 64813
1308 65371
1309 61563
1311 64813

Proposed Rules:

201 66235
316 64868
610 66235
870 64224
1308 65424

25 CFR

Proposed Rules:

514 62684
523 63236
571 63237

26 CFR

1 ....61946, 64816, 65110
301 ....62607, 66181
602 ....61946, 61947

Proposed Rules:

1 ....62327, 62684, 63574, 64879, 65138, 65634, 66011, 66012, 66239

27 CFR

4 66625
9 66629

Proposed Rules:

9 63852

28 CFR

104 65112

Proposed Rules:

524 65428

29 CFR

104 63188
404 66442
500–899 64237
1952 ....63188, 63190
2550 66136
2570 66637
4022 63836

Proposed Rules:

570 61289
579 61289

30 CFR

Ch. II 64432
Ch. V 64432

Proposed Rules:

75 63238
915 64043
926 ....64045, 64047
938 64048

31 CFR

1 62297
31 61046
538 ....63191, 63197
560 ....63191, 63197
1060 62607

Proposed Rules:

1010 64049

32 CFR

211 65112
1902 62630
1909 64237

33 CFR

100 ....62298, 63837
117 ....63839, 63840, 64009, 65118, 65120, 65375, 66183, 66184
165 ....61259, 61261, 61263, 61947, 61950, 62301, 63199, 63200, 63202, 63547, 63841, 64818, 64820, 65376, 65378, 65380, 65609, 65963
334 62631

Proposed Rules:

100 63239
117 63858
165 66239
334 62692

34 CFR

Proposed Rules:

Ch. VI 66248

36 CFR

7 61266
230 65121
1258 62632

Proposed Rules:

212 62694
214 62694
215 62694
218 62694
222 62694
228 62694
241 62694
251 62694
254 62694
292 62694

38 CFR

1 65133

39 CFR

122 61052
241 66184

Proposed Rules:

20 65639
111 ....62000, 65640

40 CFR

2 64010
9 61566
52 ....61054, 61057, 62635, 62640, 63549, 64015, 64017, 64020, 64237, 64240, 64823, 64825
80 65382
81 64825
82 61269
93 63554
112 64245
180 ....61587, 61592, 66187
271 62303
372 64022
721 61566
799 65385

Proposed Rules:

2 64055
9 65431
51 64059
52 ....61062, 61069, 61291, 62002, 62004, 63251, 63574, 63859, 63860, 64065, 64186, 64880, 64881, 65458, 66013, 66663
60 ....63878, 65138, 65653
63 65138
81 65458
82 65139
93 63575
97 ....63251, 63860
98 61293
112 64296
122 65431
174 61647
180 61647
257 63252
261 63252
264 63252
265 63252
268 63252
271 63252
302 63252
721 65580
799 65580

41 CFR

301–11 63844

42 CFR

110 62306
416 65886

Proposed Rules:

5 61294
71 63891
Ch. IV 65909
73 61206
417 63018
422 63018
423 63018
482 65891
483 63018
485 65891

44 CFR

64 61954
67 61279

Proposed Rules:

67 ....61070, 61295, 61649, 62006, 62329
206 61070

46 CFR

108 62962
117 62962
133 62962
160 62962
164 62962
180 62962
199 62962

Proposed Rules:

160 62714
530 63581
531 63581

47 CFR

Ch. I 62309
1 65965
20 63561
32 61279
52 61279
61 ....61279, 61956
64 ....61279, 61956, 63561, 65965
69 61279
73 62642
101 65970

Proposed Rules:

1 ....61295, 63257, 65472
15 61655
25 65472
54 64882
73 ....62330, 66250
76 66666

48 CFR

212 61279
247 61279
252 ....61279, 61282

Proposed Rules:

24 63896
52 63896
211 64885
215 ....61296, 64297
225 ....61296, 64297
252 ....61296, 64297, 64885
9903 61660

49 CFR

18 61597
19 61597
523 65971
535 65971
541 65610

Proposed Rules:

236 63849
360 66506
365 66506
366 66506
368 66506
385 66506
387 66506
390 66506
392 66506
580 65485
Ch. X 63276
1241 63582

50 CFR

17 ....61599, 61956, 62722, 66780
23 61978
226 ....65324, 66806
600 61985
622 ....61284, 61285, 62309, 63563, 64248
648 ....61059, 61060, 61061, 61995, 62642, 65971, 66192, 66654
679 ....61996, 63204, 63564, 65972, 65973, 65975, 66195, 66196, 66655

Proposed Rules:

17 ....61298, 61307, 61321, 61330, 61482, 61532, 61782, 61826, 61856, 61896, 62016, 62165, 62213, 62259, 62504, 62740, 62900, 62928, 63094, 63360, 63420, 63444, 63480, 63720, 64996, 66018, 66250, 66255, 66370
622 ....65324, 65662, 66021, 66672, 66675
635 ....62331, 65673
648 ....61661, 66260
660 ....65155, 65673

LIST OF PUBLIC LAWS

This is a continuing list of public bills from the current session of Congress which have become Federal laws. It may be used in conjunction with "P L U S" (Public Laws Update Service) on 202–741–6043. This list is also available online at *http://www.archives.gov/federal-register/laws*.

The text of laws is not published in the **Federal Register** but may be ordered in "slip law" (individual pamphlet) form from the Superintendent of Documents, U.S. Government Printing Office, Washington, DC 20402 (phone, 202–512–1808). The text will also be made available on the Internet from GPO's Federal Digital System (FDsys) at *http://www.gpo.gov/fdsys*. Some laws may not yet be available.

H.R. 2832/P.L. 112–40

To extend the Generalized System of Preferences, and for other purposes. (Oct. 21, 2011; 125 Stat. 401)

H.R. 3080/P.L. 112–41

United States-Korea Free Trade Agreement Implementation Act (Oct. 21, 2011; 125 Stat. 428)

H.R. 3078/P.L. 112–42

United States-Colombia Trade Promotion Agreement Implementation Act (Oct. 21, 2011; 125 Stat. 462)

H.R. 3079/P.L. 112–43

United States-Panama Trade Promotion Agreement Implementation Act (Oct. 21, 2011; 125 Stat. 497)

H.R. 2944/P.L. 112–44

United States Parole Commission Extension Act of 2011 (Oct. 21, 2011; 125 Stat. 532)

Last List October 17, 2011

Public Laws Electronic Notification Service (PENS)

PENS is a free electronic mail notification service of newly enacted public laws. To subscribe, go to *http://listserv.gsa.gov/archives/publaws-l.html*

Note: This service is strictly for E-mail notification of new laws. The text of laws is not available through this service. **PENS** cannot respond to specific inquiries sent to this address.