AUTHENTICATED
U.S. GOVERNMENT
INFORMATION
GPO

FEDERAL REGISTER

Vol. 77 Thursday,
No. 81 April 26, 2012

Pages 24829–25014

OFFICE OF THE FEDERAL REGISTER

The **FEDERAL REGISTER** (ISSN 0097–6326) is published daily, Monday through Friday, except official holidays, by the Office of the Federal Register, National Archives and Records Administration, Washington, DC 20408, under the Federal Register Act (44 U.S.C. Ch. 15) and the regulations of the Administrative Committee of the Federal Register (1 CFR Ch. I). The Superintendent of Documents, U.S. Government Printing Office, Washington, DC 20402 is the exclusive distributor of the official edition. Periodicals postage is paid at Washington, DC.

The **FEDERAL REGISTER** provides a uniform system for making available to the public regulations and legal notices issued by Federal agencies. These include Presidential proclamations and Executive Orders, Federal agency documents having general applicability and legal effect, documents required to be published by act of Congress, and other Federal agency documents of public interest.

Documents are on file for public inspection in the Office of the Federal Register the day before they are published, unless the issuing agency requests earlier filing. For a list of documents currently on file for public inspection, see *www.ofr.gov.*

The seal of the National Archives and Records Administration authenticates the Federal Register as the official serial publication established under the Federal Register Act. Under 44 U.S.C. 1507, the contents of the **Federal Register** shall be judicially noticed.

The **Federal Register** is published in paper and on 24x microfiche. It is also available online at no charge at *www.fdsys.gov*, a service of the U.S. Government Printing Office.

The online edition of the **Federal Register** is issued under the authority of the Administrative Committee of the Federal Register as the official legal equivalent of the paper and microfiche editions (44 U.S.C. 4101 and 1 CFR 5.10). It is updated by 6:00 a.m. each day the **Federal Register** is published and includes both text and graphics from Volume 59, 1 (January 2, 1994) forward. For more information, contact the GPO Customer Contact Center, U.S. Government Printing Office. Phone 202-512-1800 or 866-512-1800 (toll free). E-mail, *gpo@custhelp.com.*

The annual subscription price for the **Federal Register** paper edition is $749 plus postage, or $808, plus postage, for a combined **Federal Register, Federal Register** Index and List of CFR Sections Affected (LSA) subscription; the microfiche edition of the **Federal Register** including the **Federal Register** Index and LSA is $165, plus postage. Six month subscriptions are available for one-half the annual rate. The prevailing postal rates will be applied to orders according to the delivery method requested. The price of a single copy of the daily **Federal Register,** including postage, is based on the number of pages: $11 for an issue containing less than 200 pages; $22 for an issue containing 200 to 400 pages; and $33 for an issue containing more than 400 pages. Single issues of the microfiche edition may be purchased for $3 per copy, including postage. Remit check or money order, made payable to the Superintendent of Documents, or charge to your GPO Deposit Account, VISA, MasterCard, American Express, or Discover. Mail to: U.S. Government Printing Office—New Orders, P.O. Box 979050, St. Louis, MO 63197-9000; or call toll free 1-866-512-1800, DC area 202-512-1800; or go to the U.S. Government Online Bookstore site, see *bookstore.gpo.gov.*

There are no restrictions on the republication of material appearing in the **Federal Register.**

How To Cite This Publication: Use the volume number and the page number. Example: 77 FR 12345.

Postmaster: Send address changes to the Superintendent of Documents, Federal Register, U.S. Government Printing Office, Washington, DC 20402, along with the entire mailing label from the last issue received.

SUBSCRIPTIONS AND COPIES

PUBLIC

Subscriptions:

Paper or fiche	**202–512–1800**
Assistance with public subscriptions	**202–512–1806**

General online information **202–512–1530; 1–888–293–6498**

Single copies/back copies:

Paper or fiche	**202–512–1800**
Assistance with public single copies	**1–866–512–1800 (Toll-Free)**

FEDERAL AGENCIES

Subscriptions:

Paper or fiche	**202–741–6005**
Assistance with Federal agency subscriptions	**202–741–6005**

FEDERAL REGISTER WORKSHOP

THE FEDERAL REGISTER: WHAT IT IS AND HOW TO USE IT

FOR: Any person who uses the Federal Register and Code of Federal Regulations.

WHO: Sponsored by the Office of the Federal Register.

WHAT: Free public briefings (approximately 3 hours) to present:

1. The regulatory process, with a focus on the Federal Register system and the public's role in the development of regulations.
2. The relationship between the Federal Register and Code of Federal Regulations.
3. The important elements of typical Federal Register documents.
4. An introduction to the finding aids of the FR/CFR system.

WHY: To provide the public with access to information necessary to research Federal agency regulations which directly affect them. There will be no discussion of specific agency regulations.

WHEN: Tuesday, May 15, 2012
9 a.m.–12:30 p.m.

WHERE: Office of the Federal Register
Conference Room, Suite 700
800 North Capitol Street, NW.
Washington, DC 20002

RESERVATIONS: (202) 741–6008

Printed on recycled paper.

Contents

Federal Register

Vol. 77, No. 81

Thursday, April 26, 2012

Agency for Healthcare Research and Quality
NOTICES
Agency Information Collection Activities; Proposals, Submissions, and Approvals, 24955–24959
Scientific Information Requests:
Local Therapies for Unresectable Primary Hepatocellular Carcinoma, 24959–24960

Agriculture Department
See Food Safety and Inspection Service
NOTICES
Privacy Act; Systems of Records, 24925–24931

Centers for Disease Control and Prevention
NOTICES
Agency Information Collection Activities; Proposals, Submissions, and Approvals, 24960–24961

Coast Guard
RULES
Safety Zones:
Crowley Barge 750–2, Bayou Casotte, Pascagoula, MS, 24840–24843
Magothy River, Sillery Bay, MD, 24838–24840
PROPOSED RULES
Safety Zones:
Jet Express Triathlon, Sandusky Bay, Lake Erie, Lakeside, OH, 24880–24883

Commerce Department
See International Trade Administration
See National Oceanic and Atmospheric Administration
NOTICES
Agency Information Collection Activities; Proposals, Submissions, and Approvals, 24931–24932

Consumer Product Safety Commission
NOTICES
Meetings; Sunshine Act, 24933

Department of Transportation
See Pipeline and Hazardous Materials Safety Administration

Drug Enforcement Administration
NOTICES
Importers of Controlled Substances; Applications:
Almac Clinical Services, Inc., 24985
Catalent Pharma Solutions, Inc., 24984
Clinical Supplies Management, Inc., 24984
Penick Corp., 24983
Rhodes Technologies, 24984–24985
Importers of Controlled Substances; Registrations:
Hospira Inc., 24985
ISP Freetown Fine Chemicals, 24985–24986
Manufacturers of Controlled Substances; Applications:
Cambrex Charles City, Inc., 24986
Penick Corp., 24986
Rhodes Technologies, 24986–24987
Manufacturers of Controlled Substances; Registrations:
Cerilliant Corp., 24987–24988
ISP Freetown Fine Chemicals, 24988
Johnson Matthey Inc., 24988
Johnson Matthey Pharma Services, 24988

Education Department
NOTICES
Agency Information Collection Activities; Proposals, Submissions, and Approvals:
Race to Top Annual Performance Report, 24933–24934
Disability and Rehabilitation Research Projects and Centers Program, Proposed Priorities:
Employment of Individuals with Disabilities, 24934–24938
Meetings:
National Assessment Governing Board, 24938–24939

Energy Department
See Energy Efficiency and Renewable Energy Office
See Federal Energy Regulatory Commission

Energy Efficiency and Renewable Energy Office
NOTICES
Energy Conservation Program for Consumer Products:
Representative Average Unit Costs of Energy, 24940–24941

Environmental Protection Agency
RULES
Approvals and Promulgations of Air Quality Implementation Plans:
Virginia; Removal of Transcontinental Gas Pipe Line Corp. Permit from State Implementation Plan, 24843–24845
Approvals and Promulgations of Implementation Plans:
South Dakota; Regional Haze State Implementation Plan, 24845–24857
Interim Final Determination to Stay and Defer Sanctions:
San Joaquin Valley Unified Air Pollution Control District, 24857–24858
PROPOSED RULES
Approvals and Promulgations of Air Quality Implementation Plans:
Virginia; Removal of Transcontinental Gas Pipe Line Corp. Permit from State Implementation Plan, 24883
Revisions to the California State Implementation Plan:
San Joaquin Valley Unified Air Pollution Control District, 24883–24885
NOTICES
Agency Information Collection Activities; Proposals, Submissions, and Approvals:
Regional Haze Regulations, 24952–24954

Executive Office of the President
See Trade Representative, Office of United States

Federal Aviation Administration
RULES
Airworthiness Directives:
Airbus Airplanes, 24829–24831, 24833–24835
The Boeing Company Airplanes, 24831–24833, 24835–24838

NOTICES
Requests to Release Airport Properties:
South Texas Regional Airport, Hondo, formerly Hondo Municipal Airport, Hondo, TX, 25012–25013

Federal Communications Commission
NOTICES
Radio Broadcasting Services:
AM or FM Proposals to Change Community of License, 24954

Federal Deposit Insurance Corporation
NOTICES
Meetings; Sunshine Act, 24955

Federal Emergency Management Agency
RULES
Suspensions of Community Eligibility, 24858–24863

Federal Energy Regulatory Commission
NOTICES
Acceptance of Updated Market Power Analysis:
Vantage Wind Energy LLC, 24941–24943
Applications:
Fall Creek Hydro, LLC, 24943–24945
Combined Filings, 24945
Commissioner and Staff Attendances:
North American Electric Reliability Corp. Meetings, 24946
License Amendment Applications:
Central Vermont Public Service Corp., 24946–24947
Preliminary Permit Applications:
Cedar Creek Hydro, LLC, 24947
Proposed Restricted Service List for Programmatic Agreements:
BOST3 Hydroelectric LLC, 24947–24948
BOST4 Hydroelectric LLC, 24949
BOST5 Hydroelectric LLC, 24948–24949
Reactive Power Resources:
Supplemental Notice Requesting Comments, 24949–24950
Staff Attendances:
Transmission Planning Activities of the Southwest Power Pool, Inc., 24950
Technical Conferences:
Geomagnetic Disturbances to the Bulk-Power System, 24952
Midwest Independent Transmission System Operator, Inc., 24950–24952

Federal Highway Administration
NOTICES
Environmental Impact Statements; Availability, etc.:
Mahoning and Trumbull Counties, OH; Rescission, 25013

Federal Motor Carrier Safety Administration
RULES
Amendment to Agency Rules of Practice, 24863–24872

Fish and Wildlife Service
PROPOSED RULES
Endangered and Threatened Wildlife and Plants:
90-Day Finding on Petition to List Aliciella formosa (Aztec gilia) with Critical Habitat, 24908–24915
Revising Proposed Special Rule for Utah Prairie Dog, 24915–24924
NOTICES
Endangered and Threatened Wildlife and Plants:
Revised Recovery Plan for Utah Prairie Dog, 24975

Food and Drug Administration
NOTICES
Agency Information Collection Activities; Proposals, Submissions, and Approvals:
Prescription Drug Product Labeling, Medication Guide Requirements, 24961–24962

Food Safety and Inspection Service
PROPOSED RULES
Modernization of Poultry Slaughter Inspection, 24873–24878

Health and Human Services Department
See Agency for Healthcare Research and Quality
See Centers for Disease Control and Prevention
See Food and Drug Administration
See Health Resources and Services Administration
See National Institutes of Health

Health Resources and Services Administration
NOTICES
Agency Information Collection Activities; Proposals, Submissions, and Approvals, 24962–24964

Healthcare Research and Quality Agency
See Agency for Healthcare Research and Quality

Homeland Security Department
See Coast Guard
See Federal Emergency Management Agency

Indian Affairs Bureau
NOTICES
Agency Information Collection Activities; Proposals, Submissions, and Approvals:
Indian Reservation Roads, 24975–24976
Environmental Impact Statements; Availability, etc.:
Proposed Spokane Tribe of Indians West Plains Casino and Mixed Use Project, Airway Heights, WA, 24976
Proposed Wheatgrass Ridge Wind Project, Fort Hall Indian Reservation, Idaho; Cancellation, 24976

Interior Department
See Fish and Wildlife Service
See Indian Affairs Bureau
See Land Management Bureau
See National Park Service
See Ocean Energy Management Bureau
NOTICES
Meetings:
Secretarial Commission on Indian Trust Administration and Reform, 24974

International Trade Administration
NOTICES
Antidumping Duty Administrative Reviews; Results, Extensions, Amendments, etc.:
Brass Sheet and Strip from France, Italy, Germany and Japan, 24932–24933

Justice Department
See Drug Enforcement Administration
PROPOSED RULES
Privacy Act of 1974; Implementation, 24878–24880
NOTICES
Agency Information Collection Activities; Proposals, Submissions, and Approvals:
Leased/Charter Flight Personnel Expedited Clearance Request, 24981

Lodging of Consent Decrees under CERCLA, 24981–24982
Privacy Act; Systems of Records, 24982–24983

Labor Department
See Occupational Safety and Health Administration
NOTICES
Agency Information Collection Activities; Proposals, Submissions, and Approvals:
Blackout Period under ERISA, 24989–24990
ERISA Procedure 76–1; Advisory Opinion Procedure, 24989
Service Contract Inventories; Availability:
FY 2011, 24990

Land Management Bureau
NOTICES
Agency Information Collection Activities; Proposals, Submissions, and Approvals, 24976–24978
Filing of Plats of Survey:
Mississippi, 24978
Proposed Class II Reinstatements of Terminated Oil and Gas Leases:
Utah, 24978
Realty Actions:
Non-Competitive, Direct Sale of Public Land in Washakie County, WY, 24978–24979

Maritime Administration
NOTICES
Requested Administrative Waiver of the Coastwise Trade Laws:
Vessel MARIE ELENA, 25013

National Institutes of Health
NOTICES
Agency Information Collection Activities; Proposals, Submissions, and Approvals:
Provider-Based Sampling Feasibility Study for Vanguard Pilot Study, etc., 24964–24967
Meetings:
Center for Scientific Review, 24967–24968
Eunice Kennedy Shriver National Institute of Child Health and Human Development, 24973–24974
National Cancer Institute, 24968–24970
National Center for Complementary and Alternative Medicine, 24971
National Heart, Lung, and Blood Institute, 24973
National Institute of Allergy and Infectious Diseases, 24967
National Institute of Biomedical Imaging and Bioengineering, 24972
National Institute of Mental Health, 24970–24973
National Institute of Neurological Disorders and Stroke, 24971
National Institute on Aging, 24969
National Institute on Deafness and Other Communication Disorders, 24971–24972
National Library of Medicine, 24968
Office of the Director, 24968

National Oceanic and Atmospheric Administration
NOTICES
Meetings:
Hydrographic Services Review Panel, 24933

National Park Service
NOTICES
Environmental Assessments; Availability, etc.:
Big Thicket National Preserve, TX, 24979–24980
Environmental Impact Statements; Availability, etc.:
South Unit of Badlands National Park, SD, 24980

Nuclear Regulatory Commission
NOTICES
License Amendment Requests:
Anadarko Petroleum Corp., Bear Creek Uranium Mill, Converse County, WY, 24993–24996

Occupational Safety and Health Administration
NOTICES
Agency Information Collection Activities; Proposals, Submissions, and Approvals, 24992–24993
Agency Information Collection Activities; Proposals, Submissions, and Approvals:
Marine Terminals and Longshoring Standards, 24990–24992

Ocean Energy Management Bureau
NOTICES
Outer Continental Shelf Oil and Gas Lease Sales, 24980
Record of Decision for Authorizing Use of Outer Continental Shelf Sand Resources:
Martin County, Florida Hurricane Storm Damage Reduction Project, 24980–24981

Office of United States Trade Representative
See Trade Representative, Office of United States

Pipeline and Hazardous Materials Safety Administration
PROPOSED RULES
Hazardous Materials; Miscellaneous Amendments, 24885–24907

Postal Regulatory Commission
NOTICES
New Postal Product, 24996–24997

Securities and Exchange Commission
NOTICES
Self-Regulatory Organizations; Proposed Rule Changes:
Exemptions from Record-Keeping Requirements and Certain Securities Transactions, 25007–25010
NASDAQ OMX Phlx LLC, 24997–24999, 25003–25007
Options Clearing Corp., 24999–25003

Small Business Administration
NOTICES
Disaster Declarations:
Hawaii, 25010
Military Reservist Economic Injury Disaster Loans Interest Rate for Third Quarter FY 2012, 25010

Susquehanna River Basin Commission
NOTICES
Projects Approved for Consumptive Uses of Water, 25010–25012

Trade Representative, Office of United States
NOTICES
Fiscal Year 2012 Allocation of Additional Tariff-Rate Quota Volume for Raw Cane Sugar, etc., 25012

Transportation Department
See Federal Aviation Administration
See Federal Highway Administration
See Federal Motor Carrier Safety Administration
See Maritime Administration

See Pipeline and Hazardous Materials Safety Administration

Treasury Department

NOTICES

Agency Information Collection Activities; Proposals, Submissions, and Approvals, 25013–25014

Reader Aids

Consult the Reader Aids section at the end of this page for phone numbers, online resources, finding aids, reminders, and notice of recently enacted public laws.

To subscribe to the Federal Register Table of Contents LISTSERV electronic mailing list, go to http://listserv.access.gpo.gov and select Online mailing list archives, FEDREGTOC-L, Join or leave the list (or change settings); then follow the instructions.

CFR PARTS AFFECTED IN THIS ISSUE

A cumulative list of the parts affected this month can be found in the Reader Aids section at the end of this issue.

9 CFR

Proposed Rules:

381 24873
500 24873

14 CFR

39 (4 documents) 24829, 24831, 24833, 24835

28 CFR

Proposed Rules:

16 24878

33 CFR

165 (2 documents) 24838, 24840

Proposed Rules:

165 24880

40 CFR

52 (3 documents) 24843, 24845, 24857

Proposed Rules:

52 (2 documents) 24883

44 CFR

64 24858

49 CFR

386 24863

Proposed Rules:

105 24885
171 24885
172 24885
173 24885
177 24885
178 24885
180 24885

50 CFR

Proposed Rules:

17 (2 documents) 24908, 24915

Rules and Regulations

Federal Register

Vol. 77, No. 81

Thursday, April 26, 2012

This section of the FEDERAL REGISTER contains regulatory documents having general applicability and legal effect, most of which are keyed to and codified in the Code of Federal Regulations, which is published under 50 titles pursuant to 44 U.S.C. 1510.

The Code of Federal Regulations is sold by the Superintendent of Documents. Prices of new books are listed in the first FEDERAL REGISTER issue of each week.

DEPARTMENT OF TRANSPORTATION

Federal Aviation Administration

14 CFR Part 39

[Docket No. FAA–2011–1323; Directorate Identifier 2010–NM–212–AD; Amendment 39–17018; AD 2012–08–02]

RIN 2120–AA64

Airworthiness Directives; Airbus Airplanes

AGENCY: Federal Aviation Administration (FAA), Department of Transportation (DOT).

ACTION: Final rule.

SUMMARY: We are adopting a new airworthiness directive (AD) for all Model A330–200 and –300 series airplanes; Model A330–223F and –243F airplanes; and Model A340–200, –300, –500, and –600 series airplanes. This AD was prompted by a report that during the evaluation of engine failures at take-off on Airbus flight simulators, it has been shown that with flight control primary computer (FCPC) 1 inoperative, in worst case scenario when FCPC2 and FCPC3 resets occur during rotation at take off, a transient loss of elevator control associated with a temporary incorrect flight control law reconfiguration could occur. This AD requires revising the Limitations section of the applicable airplane flight manual. We are issuing this AD to prevent movement of the elevators to zero position, which could result in inducing a pitch down movement instead of a pitch up movement needed for lift off, resulting in loss of controllability of the airplane.

DATES: This AD becomes effective May 31, 2012.

ADDRESSES: You may examine the AD docket on the Internet at *http://www.regulations.gov* or in person at the U.S. Department of Transportation, Docket Operations, M–30, West Building Ground Floor, Room W12–140, 1200 New Jersey Avenue SE., Washington, DC.

FOR FURTHER INFORMATION CONTACT: Vladimir Ulyanov, Aerospace Engineer, International Branch, ANM–116, Transport Airplane Directorate, FAA, 1601 Lind Avenue SW., Renton, Washington 98057–3356; telephone (425) 227–1138; fax (425) 227–1149.

SUPPLEMENTARY INFORMATION:

Discussion

We issued a notice of proposed rulemaking (NPRM) to amend 14 CFR part 39 to include an AD that would apply to the specified products. That NPRM was published in the **Federal Register** on December 22, 2011 (76 FR 79560). That NPRM proposed to correct an unsafe condition for the specified products. The MCAI states:

> On A330/A340 aeroplanes, the Flight Control Primary Computer 2 (FCPC2) and FCPC3 are supplied with power from the 2PP bus bar. Electrical transients on the 2PP bus bar occur, in particular during engine n.2 failure on A330 aeroplanes or engine n.3 failure on A340 aeroplanes. Such electrical transients lead to a FCPC2 reset. FCPC3 reset does not occur thanks to the introduction of second electrical power supply to FCPC3 from 1PP bus bar associated to the Electrical Contactor Management Unit (ECMU) standard 5.
>
> During the evaluation of specific engine failure cases at take-off on Airbus flight simulators, it has been evidenced that with FCPC1 inoperative, in the worst case, when FCPC2 and FCPC3 resets occur during rotation at take off, a transient loss of elevator control associated with a temporary incorrect flight control law reconfiguration could occur. This condition leads to a movement of the elevators to the zero position, which induces a pitch down movement instead of a pitch up movement needed to lift off. In addition, it leads to a limitation of the pilot control on pitch axis and limits the pilot capacity to counter the pitch down movement during this flight phase, which constitutes an unsafe condition.
>
> To prevent such condition, [EASA] Emergency Airworthiness Directive (EAD) 2008–0010–E was issued to prohibit aeroplanes dispatch with FCPC1 inoperative (from GO to NO–GO) for certain aeroplane configurations. For other configurations, dispatch is allowed when the integrity of the FCPC3 second electrical power supply is ensured.
>
> EASA AD 2008–0010R1 was issued to:
>
> —For A340–500/–600, alleviate the dispatch restriction on aeroplanes fitted with new FCPC Standard W11 (part number (P/N) LA2K2B100GA0000)
>
> and
>
> —For A330 and A340–200/–300, to take into account the possibility to embody in service a new FCPC3 second electrical power supply equivalent to the production one.
>
> This [EASA] AD, which supersedes EASA AD 2008–0010R1 retaining its requirements, is issued to extend the applicability to the newly certified models A330–223F and A330–243F.

The FAA did not issue corresponding ADs for EASA Airworthiness Directive 2008–0010–E and EASA Airworthiness Directive 2008–0010R1 since it was determined at that time that the FAA Master Minimum Equipment List (MMEL) was an acceptable method for controlling exposure of the U.S. fleet to the safety issue addressed in the EASA ADs. Since that decision was made, the FAA determined that an AD is needed to control dispatch restrictions. In addition, EASA Airworthiness Directive 2010–0109, dated June 28, 2010, added two new Airbus models in the applicability and we are proceeding with this FAA AD in order to address the identified unsafe condition for the U.S. fleet. You may obtain further information by examining the MCAI in the AD docket.

Comments

We gave the public the opportunity to participate in developing this AD. We considered the comment received. The commenter, Air Line Pilots Association, International, supports the NPRM (76 FR 79560, December 22, 2011).

Explanation of Changes Made to This AD

We have made the following changes to this AD:

- Redesignated Note 2 to paragraph (g) of the NPRM (76 FR 79560, December 22, 2011) as paragraph (g)(4) of this AD, and redesignated subsequent notes accordingly.
- Redesignated paragraph (h) of the NPRM (76 FR 79560, December 22, 2011) as paragraph (h)(1) of this AD.
- Redesignated Note 3 to paragraph (h) of the NPRM (76 FR 79560, December 22, 2011) as paragraph (h)(2) of this AD.
- Updated paragraph reference in paragraph (h)(2) of this AD.
- Updated paragraph references in Note 2 to paragraph (h)(1) of this AD.

Conclusion

We reviewed the available data, including the comments received, and determined that air safety and the public interest require adopting the AD with the changes described previously—except for minor editorial changes. We have determined that these changes:

- Are consistent with the intent that was proposed in the NPRM (76 FR 79560, December 22, 2011) for correcting the unsafe condition; and
- Do not add any additional burden upon the public than was already proposed in the NPRM (76 FR 79560, December 22, 2011).

Costs of Compliance

We estimate that this AD will affect 55 products of U.S. registry. We also estimate that it will take about 1 work-hour per product to comply with the basic requirements of this AD. The average labor rate is $85 per work-hour. Based on these figures, we estimate the cost of this AD to the U.S. operators to be $4,675 or $85 per product.

Authority for This Rulemaking

Title 49 of the United States Code specifies the FAA's authority to issue rules on aviation safety. Subtitle I, section 106, describes the authority of the FAA Administrator. ''Subtitle VII: Aviation Programs,'' describes in more detail the scope of the Agency's authority.

We are issuing this rulemaking under the authority described in ''Subtitle VII, Part A, Subpart III, Section 44701: General requirements.'' Under that section, Congress charges the FAA with promoting safe flight of civil aircraft in air commerce by prescribing regulations for practices, methods, and procedures the Administrator finds necessary for safety in air commerce. This regulation is within the scope of that authority because it addresses an unsafe condition that is likely to exist or develop on products identified in this rulemaking action.

Regulatory Findings

We determined that this AD will not have federalism implications under Executive Order 13132. This AD will not have a substantial direct effect on the States, on the relationship between the national government and the States, or on the distribution of power and responsibilities among the various levels of government.

For the reasons discussed above, I certify that this AD:

1. Is not a ''significant regulatory action'' under Executive Order 12866;

2. Is not a ''significant rule'' under the DOT Regulatory Policies and Procedures (44 FR 11034, February 26, 1979);

3. Will not affect intrastate aviation in Alaska; and

4. Will not have a significant economic impact, positive or negative, on a substantial number of small entities under the criteria of the Regulatory Flexibility Act.

We prepared a regulatory evaluation of the estimated costs to comply with this AD and placed it in the AD docket.

Examining the AD Docket

You may examine the AD docket on the Internet at *http://www.regulations.gov*; or in person at the Docket Operations office between 9 a.m. and 5 p.m., Monday through Friday, except Federal holidays. The AD docket contains the NPRM (76 FR 79560, December 22, 2011), the regulatory evaluation, any comments received, and other information. The street address for the Docket Operations office (telephone (800) 647–5527) is in the **ADDRESSES** section. Comments will be available in the AD docket shortly after receipt.

List of Subjects in 14 CFR Part 39

Air transportation, Aircraft, Aviation safety, Incorporation by reference, Safety.

Adoption of the Amendment

Accordingly, under the authority delegated to me by the Administrator, the FAA amends 14 CFR part 39 as follows:

PART 39—AIRWORTHINESS DIRECTIVES

■ 1. The authority citation for part 39 continues to read as follows:

Authority: 49 U.S.C. 106(g), 40113, 44701.

§ 39.13 [Amended]

■ 2. The FAA amends § 39.13 by adding the following new AD:

2012–08–02 Airbus: Amendment 39–17018. Docket No. FAA–2011–1323; Directorate Identifier 2010–NM–212–AD.

(a) Effective Date

This airworthiness directive (AD) becomes effective May 31, 2012.

(b) Affected ADs

None.

(c) Applicability

This AD applies to Airbus Model A330–201, –202, –203, –223, –223F, –243, –243F, –301, –302, –303, –321, –322, –323, –341, –342, and –343 airplanes; and Model A340–211, –212, –213, –311, –312, –313, –541, and –642 airplanes; certificated in any category; all serial numbers.

(d) Subject

Air Transport Association (ATA) of America Code 27: Flight Controls.

(e) Reason

This AD was prompted by a report that during the evaluation of engine failures at take-off on Airbus flight simulators, it has been shown that with flight control primary computer (FCPC) 1 inoperative, in worst case scenario when FCPC2 and FCPC3 resets occur during rotation at take off, a transient loss of elevator control associated with a temporary incorrect flight control law reconfiguration could occur. We are issuing this AD to prevent movement of the elevators to zero position, which could result in inducing a pitch down movement instead of a pitch up movement needed for lift off, resulting in loss of controllability of the airplane.

(f) Compliance

You are responsible for having the actions required by this AD performed within the compliance times specified, unless the actions have already been done.

(g) Airplane Flight Manual (AFM) Revision for Certain Airplanes

For airplanes identified in paragraph (c) of this AD, except for airplanes identified in paragraphs (g)(1), (g)(2), and (g)(3) of this AD: Within 30 days after the effective date of this AD, revise the Limitations section of the applicable AFM to include the following statement. This may be done by inserting a copy of this AD into the AFM.

Dispatch with the FCPC ''PRIM 1'' inoperative is prohibited.

Note 1 to paragraph (g) of this AD: When a statement identical to that in paragraph (g) of this AD has been included in the general revisions of the AFM, the general revisions may be inserted into the AFM, and the copy of this AD may be removed from the AFM.

(1) Model A330–223F and –243F airplanes.

(2) Model A330–200 and –300 series airplanes, and Model A340–200 and –300 series airplanes, on which Airbus modification 44385 has been embodied either in production or in service by Airbus Service Bulletin A330–27–3159 or Airbus Service Bulletin A340–27–4158; and on which Airbus modification 44431 has been embodied either in production or in service by Airbus Service Bulletin A330–24–3011 or Airbus Service Bulletin A340–24–4019.

(3) Model A340–500 and –600 series airplanes on which Airbus modification 57698 has been embodied either in production or in service by Airbus Service Bulletin A340–27–5046.

(4) This dispatch restriction applies primarily to Model A330–200 and –300 series airplanes, and Model A340–200 and –300 series airplanes, which have embodied Airbus Service Bulletin A330–27–3040 or Airbus Service Bulletin A340–27–4046 in service.

(h) AFM Revision for Certain Other Airplanes

(1) For Model A330–200 and –300 series airplanes, and Model A340–200 and –300 series airplanes, on which Airbus

modification 44385 has been embodied either in production or in service by Airbus Service Bulletin A330–27–3159 or Airbus Service Bulletin A340–27–4158; and Airbus modification 44431 has been embodied either in production or in service by Airbus Service Bulletin A330–24–3011 or Airbus Service Bulletin A340–24–4019: Within 30 days after the effective date of this AD, revise the Limitations section of the applicable AFM to include the following statement. This may be done by inserting a copy of this AD into the AFM.

Dispatch with the FCPC ''PRIM 1'' inoperative is allowed provided that the operational test of the FCPC3 second electrical power supply is successfully performed, in accordance with the instructions of Airbus AOT A330–27A3158, or AOT A340–27A4157, as applicable, before the first flight of the MMEL interval.

If the test is not successful, repair in accordance with the instructions of Airbus AOT A330–27A3158 or AOT A340–27A4157, as applicable, before dispatch with FCPC ''PRIM 1'' inoperative.

Note 2 to paragraph (h)(1) of this AD: When a statement identical to that in paragraph (h)(1) of this AD has been included in the general revisions of the AFM, the general revisions may be inserted into the AFM, and the copy of this AD may be removed from the AFM.

(2) Model A330–223F and –243F airplanes are not affected by paragraph (h) of this AD.

(i) AFM Revision for Model A330–223F and A330–243F Airplanes

For Model A330–223F and A330–243F airplanes: Within 30 days after the effective date of this AD, revise the Limitations section of the AFM to include the following statement. This may be done by inserting a copy of this AD into the AFM.

Dispatch with the FCPC ''PRIM 1'' inoperative is allowed provided that the operational test of the FCPC3 second electrical power supply is successfully performed, in accordance with the instructions of Airbus AOT A330–27A3158, before the first flight of the MMEL interval.

If the test is not successful, repair in accordance with the instructions of Airbus AOT A330–27A3158, before dispatch with FCPC ''PRIM 1'' inoperative.

Note 3 to paragraph (i) of this AD: When a statement identical to that in paragraph (i) of this AD has been included in the general revisions of the AFM, the general revisions may be inserted into the AFM, and the copy of this AD may be removed from the AFM.

(j) Other FAA AD Provisions

The following provisions also apply to this AD:

(1) Alternative Methods of Compliance (AMOCs): The Manager, International Branch, ANM–116, FAA, has the authority to approve AMOCs for this AD, if requested using the procedures found in 14 CFR 39.19. In accordance with 14 CFR 39.19, send your request to your principal inspector or local Flight Standards District Office, as appropriate. If sending information directly to the International Branch, send it to ATTN: Vladimir Ulyanov, Aerospace Engineer, International Branch, ANM–116, Transport Airplane Directorate, FAA, 1601 Lind Avenue SW., Renton, Washington 98057–3356; telephone (425) 227–1138; fax (425) 227–1149. Information may be emailed to: *9-ANM-116-AMOC-REQUESTS@faa.gov.* Before using any approved AMOC, notify your appropriate principal inspector, or lacking a principal inspector, the manager of the local flight standards district office/certificate holding district office. The AMOC approval letter must specifically reference this AD.

(2) Airworthy Product: For any requirement in this AD to obtain corrective actions from a manufacturer or other source, use these actions if they are FAA-approved. Corrective actions are considered FAA-approved if they are approved by the State of Design Authority (or their delegated agent). You are required to assure the product is airworthy before it is returned to service.

(k) Related Information

Refer to MCAI European Aviation Safety Agency Airworthiness Directive 2010–0109, dated June 28, 2010, for related information.

(l) Material Incorporated by Reference

None.

Issued in Renton, Washington, on April 5, 2012.

Ali Bahrami,

Manager, Transport Airplane Directorate, Aircraft Certification Service.

[FR Doc. 2012–10029 Filed 4–25–12; 8:45 am]

BILLING CODE 4910–13–P

DEPARTMENT OF TRANSPORTATION

Federal Aviation Administration

14 CFR Part 39

[Docket No. FAA–2012–0110; Directorate Identifier 2011–NM–148–AD; Amendment 39–17034; AD 2012–08–17]

RIN 2120–AA64

Airworthiness Directives; The Boeing Company Airplanes

AGENCY: Federal Aviation Administration (FAA), DOT.

ACTION: Final rule.

SUMMARY: We are adopting a new airworthiness directive (AD) for certain The Boeing Company Model 737–100, –200, –200C, –300, –400, and –500 series airplanes equipped with analog transient suppression devices (ATSDs) installed in accordance with Supplemental Type Certificate ST00146BO. This AD was prompted by multiple reports of corrosion on ATSDs. This AD requires revising the maintenance program to incorporate certain limitations. We are issuing this AD to detect and correct corrosion on ATSDs, which could result in the loss of high voltage transient protection (e.g., lightning protection) in the fuel tanks and consequent fuel tank explosion and loss of the airplane.

DATES: This AD is effective May 31, 2012.

The Director of the Federal Register approved the incorporation by reference of a certain publication listed in the AD as of May 31, 2012.

ADDRESSES: For service information identified in this AD, contact Goodrich Corporation, Sensors and Integrated Systems, 100 Panton Road, Vergennes, Vermont 05491; phone: 802–877–4580; fax: 802–877–4444; email: *les.blades@goodrich.com;* Internet: *http://www.goodrich.com.* You may review copies of the referenced service information at the FAA, Transport Airplane Directorate, 1601 Lind Avenue SW., Renton, Washington. For information on the availability of this material at the FAA, call 425–227–1221.

Examining the AD Docket

You may examine the AD docket on the Internet at *http://www.regulations.gov;* or in person at the Docket Management Facility between 9 a.m. and 5 p.m., Monday through Friday, except Federal holidays. The AD docket contains this AD, the regulatory evaluation, any comments received, and other information. The address for the Docket Office (phone: 800–647–5527) is Document Management Facility, U.S. Department of Transportation, Docket Operations, M–30, West Building Ground Floor, Room W12–140, 1200 New Jersey Avenue SE., Washington, DC 20590.

FOR FURTHER INFORMATION CONTACT: Marc Ronell, Aerospace Engineer, Engine and Propeller Directorate, ANE–150, FAA, New England Aircraft Certification Office (ACO), 12 New England Executive Park, Burlington, Massachusetts 01803; phone: 781–238–7776; fax: 781–238–7170; email: *marc.ronell@faa.gov.*

SUPPLEMENTARY INFORMATION:

Discussion

We issued a notice of proposed rulemaking (NPRM) to amend 14 CFR part 39 to include an AD that would apply to the specified products. That NPRM was published in the **Federal Register** on February 9, 2012 (77 FR 6692). That NPRM proposed to require revising the maintenance program to incorporate certain limitations.

Comments

We gave the public the opportunity to participate in developing this AD. We received no comments on the NPRM (77

FR 6692, February 9, 2012) or on the determination of the cost to the public.

Changes Made to This AD

We have redesignated Note 1 of the NPRM (77 FR 6692, February 9, 2012) as paragraph (c)(2) of this AD and redesignated subsequent notes accordingly, and redesignated paragraph (c) of the NPRM as paragraph (c)(1) of this AD.

Conclusion

We reviewed the relevant data and determined that air safety and the public interest require adopting the AD with the changes described previously and minor editorial changes. We have determined that these minor changes:

• Are consistent with the intent that was proposed in the NPRM (77 FR 6692, February 9, 2012) for correcting the unsafe condition; and

• Do not add any additional burden upon the public than was already proposed in the NPRM (77 FR 6692, February 9, 2012).

We also determined that these changes will not increase the economic burden on any operator or increase the scope of the AD.

Costs of Compliance

We estimate that this AD affects 384 airplanes of U.S. registry.

We estimate the following costs to comply with this AD:

ESTIMATED COSTS

Action	Labor cost	Parts cost	Cost per product	Cost on U.S. operators
Revise maintenance program	1 work-hour × $85 per hour = $85	$0	$85	$32,640

Authority for This Rulemaking

Title 49 of the United States Code specifies the FAA's authority to issue rules on aviation safety. Subtitle I, section 106, describes the authority of the FAA Administrator. Subtitle VII: Aviation Programs, describes in more detail the scope of the Agency's authority.

We are issuing this rulemaking under the authority described in Subtitle VII, Part A, Subpart III, Section 44701: ''General requirements.'' Under that section, Congress charges the FAA with promoting safe flight of civil aircraft in air commerce by prescribing regulations for practices, methods, and procedures the Administrator finds necessary for safety in air commerce. This regulation is within the scope of that authority because it addresses an unsafe condition that is likely to exist or develop on products identified in this rulemaking action.

Regulatory Findings

This AD will not have federalism implications under Executive Order 13132. This AD will not have a substantial direct effect on the States, on the relationship between the national government and the States, or on the distribution of power and responsibilities among the various levels of government.

For the reasons discussed above, I certify that this AD:

(1) Is not a ''significant regulatory action'' under Executive Order 12866,

(2) Is not a ''significant rule'' under DOT Regulatory Policies and Procedures (44 FR 11034, February 26, 1979),

(3) Will not affect intrastate aviation in Alaska, and

(4) Will not have a significant economic impact, positive or negative, on a substantial number of small entities under the criteria of the Regulatory Flexibility Act.

List of Subjects in 14 CFR Part 39

Air transportation, Aircraft, Aviation safety, Incorporation by reference, Safety.

Adoption of the Amendment

Accordingly, under the authority delegated to me by the Administrator, the FAA amends 14 CFR part 39 as follows:

PART 39—AIRWORTHINESS DIRECTIVES

■ 1. The authority citation for part 39 continues to read as follows:

Authority: 49 U.S.C. 106(g), 40113, 44701.

§ 39.13 [Amended]

■ 2. The FAA amends § 39.13 by adding the following new airworthiness directive (AD):

2012–08–17 The Boeing Company: Amendment 39–17034; Docket No. FAA–2012–0110; Directorate Identifier 2011–NM–148–AD.

(a) Effective Date

This AD is effective May 31, 2012.

(b) Affected ADs

None.

(c) Applicability

(1) This AD applies to The Boeing Company Model 737–100, –200, –200C, –300, –400, and –500 series airplanes, certificated in any category, with an original airworthiness certificate or original export certificate of airworthiness issued before September 26, 2011, equipped with analog transient suppression devices (ATSDs) installed in accordance with Supplemental Type Certificate ST00146BO. *http://rgl.faa.gov/Regulatory_and_Guidance_Library/rgstc.nsf/0/2399C433BB10CF1085256CCB00601A12?OpenDocument&Highlight=st00146bo*

(2) This AD requires revisions to certain operator maintenance documents to include new actions (e.g., inspections and/or Critical Design Configuration Control Limitations (CDCCLs). Compliance with these actions is required by 14 CFR 91.403(c). For airplanes that have been previously modified, altered, or repaired in the areas addressed by these inspections, the operator may not be able to accomplish the inspections described in the revisions. In this situation, to comply with 14 CFR 91.403(c), the operator must request approval for an alternative method of compliance (AMOC) according to paragraph (i) of this AD. The request should include a description of changes to the required actions that will ensure the continued operational safety of the airplane.

(d) Subject

Joint Aircraft System Component (JASC)/Air Transport Association (ATA) of America Code 2841, Fuel Quantity Indicator.

(e) Unsafe Condition

This AD was prompted by multiple reports of corrosion on ATSDs. We are issuing this AD to detect and correct corrosion on ATSDs, which could result in the loss of high voltage transient protection (e.g., lightning protection) in the fuel tanks and consequent fuel tank explosion and loss of the airplane.

(f) Compliance

Comply with this AD within the compliance times specified, unless already done.

(g) Maintenance Program Revision

Within 3 months after the effective date of this AD, revise the maintenance program to incorporate the limitations specified in Goodrich Principal Instructions for Continued Airworthiness Manual for the Analog Transient Suppression Device Installation Applicable to Boeing 737–100 through –500 Airplanes Supplemental Type Certificate—ST00146BO, Document T3044–0010–0101, Revision D, dated September 26, 2011. The initial compliance time for accomplishing each task is at the applicable

time specified in Goodrich Principal Instructions for Continued Airworthiness Manual for the Analog Transient Suppression Device Installation Applicable to Boeing 737–100 through -500 Airplanes Supplemental Type Certificate—ST00146BO, Document T3044–0010–0101, Revision D, dated September 26, 2011, or within 18 months after the effective date of this AD, whichever occurs later.

Note 1 to paragraph (g) of this AD: Components that have been identified as airworthy or installed on the affected airplanes before the revision of the maintenance program, as required by paragraph (g) of this AD, do not need to be reworked in accordance with the CDCCLs. However, once the maintenance program has been revised, paragraph (g) of this AD requires that future maintenance actions on these components must follow the CDCCLs.

(h) No Alternative Actions Intervals, and/or Critical Design Configuration Control Limitations

After accomplishing the revision required by paragraph (g) of this AD, no alternative actions (e.g., inspections), intervals, and/or CDCCLs may be used other than those specified in Goodrich Principal Instructions for Continued Airworthiness Manual for the Analog Transient Suppression Device Installation Applicable to Boeing 737–100 through -500 Airplanes Supplemental Type Certificate—ST00146BO, Document

T3044–0010–0101, Revision D, dated September 26, 2011, unless the actions, intervals, and/or CDCCLs are approved as an AMOC in accordance with the procedures specified in paragraph (i) of this AD.

(i) Alternative Methods of Compliance

(1) The Manager, Boston Aircraft Certification Office (ACO), FAA, has the authority to approve AMOCs for this AD, if requested using the procedures found in 14 CFR 39.19. In accordance with 14 CFR 39.19, send your request to your principal inspector or local Flight Standards District Office, as appropriate. If sending information directly to the manager of the ACO, send it to the attention of the person identified in the Related Information section of this AD.

(2) Before using any approved AMOC, notify your appropriate principal inspector, or lacking a principal inspector, the manager of the local flight standards district office/ certificate holding district office.

(j) Related Information

For more information about this AD, contact Marc Ronell, Aerospace Engineer, Engine and Propeller Directorate, ANE–150, FAA, New England Aircraft Certification Office, 12 New England Executive Park, Burlington, Massachusetts 01803; phone: 781–238–7776; fax: 781–238–7170; email: *marc.ronell@faa.gov*.

(k) Material Incorporated by Reference

(1) You must use the following service information to do the actions required by this AD, unless the AD specifies otherwise. The Director of the Federal Register approved the incorporation by reference (IBR) of the following service information under 5 U.S.C. 552(a) and 1 CFR part 51.

(i) Goodrich Principal Instructions for Continued Airworthiness Manual for the Analog Transient Suppression Device Installation Applicable to Boeing 737–100 through -500 Airplanes Supplemental Type Certificate—ST00146BO, Document T3044–0010–0101, Revision D, dated September 26, 2011.

(2) For service information identified in this AD, Goodrich Corporation, Sensors and Integrated Systems, 100 Panton Road, Vergennes, Vermont 05491; phone: 802–877–4580; fax: 802–877–4444; email: *les.blades@goodrich.com;* Internet: *http://www.goodrich.com/TechPubs.*

(3) You may review copies of the referenced service information at the FAA, Transport Airplane Directorate, 1601 Lind Avenue SW., Renton, Washington. For information on the availability of this material at the FAA, call 425–227–1221.

(4) You may also review copies of the service information that is incorporated by reference at the National Archives and Records Administration (NARA). For information on the availability of this material at NARA, call 202–741–6030, or go to: *http://www.archives.gov/federal-register/cfr/ibr-locations.html.*

Issued in Renton, Washington, on April 13, 2012.

John P. Piccola,

Acting Manager, Transport Airplane Directorate, Aircraft Certification Service.

[FR Doc. 2012–9713 Filed 4–25–12; 8:45 am]

BILLING CODE 4910–13–P

DEPARTMENT OF TRANSPORTATION

Federal Aviation Administration

14 CFR Part 39

[Docket No. FAA–2012–0033; Directorate Identifier 2011–NM–086–AD; Amendment 39–17029; AD 2012–08–12]

RIN 2120–AA64

Airworthiness Directives; Airbus Airplanes

AGENCY: Federal Aviation Administration (FAA), Department of Transportation (DOT).

ACTION: Final rule.

SUMMARY: We are adopting a new airworthiness directive (AD) for all Airbus Model A310 series airplanes. This AD was prompted by a report of an electrical arc and hydraulic haze in the wheel bay of the left-hand main landing gear (MLG) possibly resulting from chafing between the hydraulic high pressure hose and electrical wiring of the green electrical motor pump (EMP). This AD requires temporarily prohibiting in-flight use of the green EMPs; temporarily revising the airplane flight manual (AFM) limitations section; temporarily installing a placard in the cockpit overhead panel; doing a one-time general visual inspection for correct condition and installation of hydraulic pressure hoses, electrical conduits, feeder cables, and associated clamping devices; and corrective action if necessary. We are issuing this AD to detect and correct chafing of hydraulic pressure hoses and electrical wiring of the green EMPs, which in combination with a system failure, could cause an uncontrolled and undetected fire in the MLG bay.

DATES: This AD becomes effective May 31, 2012.

The Director of the **Federal Register** approved the incorporation by reference of certain publications listed in this AD as of May 31, 2012.

ADDRESSES: You may examine the AD docket on the Internet at *http://www.regulations.gov* or in person at the U.S. Department of Transportation, Docket Operations, M–30, West Building Ground Floor, Room W12–140, 1200 New Jersey Avenue SE., Washington, DC.

FOR FURTHER INFORMATION CONTACT: Dan Rodina, Aerospace Engineer, International Branch, ANM–116, Transport Airplane Directorate, FAA, 1601 Lind Avenue SW., Renton, Washington 98057–3356; telephone (425) 227–2125; fax (425) 227–1149.

SUPPLEMENTARY INFORMATION:

Discussion

We issued a notice of proposed rulemaking (NPRM) to amend 14 CFR part 39 to include an AD that would apply to the specified products. That NPRM was published in the **Federal Register** on January 20, 2012 (77 FR 2928). That NPRM proposed to correct an unsafe condition for the specified products. The MCAI states:

> An operator reported an electrical arc and a large hydraulic haze in the left hand Main Landing Gear (LH MLG) wheel bay that occurred during ground operation. The analysis revealed that this occurrence is likely the result of chafing between hydraulic high pressure hose and electrical wiring of the Green Electrical Motor Pump (EMP).
>
> This condition, if not detected and corrected, and in combination with a system failure leading to the use of the Green EMPs in flight, could lead to an uncontrolled and undetected fire in the MLG bay.
>
> For the reasons explained above, this AD temporarily prohibits the in-flight use of green EMPs, by mandating an update of the Aeroplane Flight Manual (AFM) limitations section and installation of a placard in the cockpit overhead panel. This [EASA] AD requires also a one-time [general] visual inspection of hydraulic pressure hoses and electrical wiring of Green EMPs and corrective action(s), depending on findings.

Corrective actions include repairing or replacing the hydraulic pressure hoses and electrical wiring. You may obtain further information by examining the MCAI in the AD docket.

Comments

We gave the public the opportunity to participate in developing this AD. We have considered the comment received.

Request To Add Word to Summary Paragraph

Airbus requested the word ''temporarily'' be added before the phrases in the Summary section of the NPRM (77 FR 2928, January 20, 2012): ''prohibiting in-flight use of the green EMPs,'' ''revising the airplane flight manual (AFM) limitations section,'' and ''installing a placard in the cockpit overhead panel.'' Airbus explained that after the one-time visual inspection of the hydraulic pressure hoses and electrical wiring of the green EMPs and accomplishing the corrective actions, if needed, these limitations must be removed.

We concur. We have added the word ''temporarily'' before those phrases in the Summary section of this AD.

Conclusion

We reviewed the available data, including the comment received, and determined that air safety and the public interest require adopting the AD as proposed except for minor editorial changes. We have determined that these minor changes:

- Are consistent with the intent that was proposed in the NPRM (77 FR 2928, January 20, 2012) for correcting the unsafe condition; and
- Do not add any additional burden upon the public than was already proposed in the NPRM (77 FR 2928, January 20, 2012).

Costs of Compliance

We estimate that this AD will affect 58 products of U.S. registry. We also estimate that it will take about 2 work-hours per product to comply with the basic requirements of this AD. The average labor rate is $85 per work-hour. Required parts will cost about $200 per product. Where the service information lists required parts costs that are covered under warranty, we have assumed that there will be no charge for these parts. As we do not control warranty coverage for affected parties, some parties may incur costs higher than estimated here. Based on these figures, we estimate the cost of this AD to the U.S. operators to be $21,460, or $370 per product.

Authority for This Rulemaking

Title 49 of the United States Code specifies the FAA's authority to issue rules on aviation safety. Subtitle I, section 106, describes the authority of the FAA Administrator. ''Subtitle VII: Aviation Programs,'' describes in more detail the scope of the Agency's authority.

We are issuing this rulemaking under the authority described in ''Subtitle VII, Part A, Subpart III, Section 44701: General requirements.'' Under that section, Congress charges the FAA with promoting safe flight of civil aircraft in air commerce by prescribing regulations for practices, methods, and procedures the Administrator finds necessary for safety in air commerce. This regulation is within the scope of that authority because it addresses an unsafe condition that is likely to exist or develop on products identified in this rulemaking action.

Regulatory Findings

We determined that this AD will not have federalism implications under Executive Order 13132. This AD will not have a substantial direct effect on the States, on the relationship between the national government and the States, or on the distribution of power and responsibilities among the various levels of government.

For the reasons discussed above, I certify that this AD:

1. Is not a ''significant regulatory action'' under Executive Order 12866;
2. Is not a ''significant rule'' under the DOT Regulatory Policies and Procedures (44 FR 11034, February 26, 1979);
3. Will not affect intrastate aviation in Alaska; and
4. Will not have a significant economic impact, positive or negative, on a substantial number of small entities under the criteria of the Regulatory Flexibility Act.

We prepared a regulatory evaluation of the estimated costs to comply with this AD and placed it in the AD docket.

Examining the AD Docket

You may examine the AD docket on the Internet at *http://www.regulations.gov;* or in person at the Docket Operations office between 9 a.m. and 5 p.m., Monday through Friday, except Federal holidays. The AD docket contains the NPRM (77 FR 2928, January 20, 2012), the regulatory evaluation, any comments received, and other information. The street address for the Docket Operations office (telephone (800) 647–5527) is in the **ADDRESSES** section. Comments will be available in the AD docket shortly after receipt.

List of Subjects in 14 CFR Part 39

Air transportation, Aircraft, Aviation safety, Incorporation by reference, Safety.

Adoption of the Amendment

Accordingly, under the authority delegated to me by the Administrator, the FAA amends 14 CFR part 39 as follows:

PART 39—AIRWORTHINESS DIRECTIVES

■ 1. The authority citation for part 39 continues to read as follows:

Authority: 49 U.S.C. 106(g), 40113, 44701.

§ 39.13 [Amended]

■ 2. The FAA amends § 39.13 by adding the following new AD:

2012–08–12 Airbus: Amendment 39–17029. Docket No. FAA–2012–0033; Directorate Identifier 2011–NM–086–AD.

(a) Effective Date

This airworthiness directive (AD) becomes effective May 31, 2012.

(b) Affected ADs

None.

(c) Applicability

This AD applies to Airbus Model A310–203, –204, –221, –222, –304, –322, –324, and –325 airplanes, certificated in any category, all serial numbers.

(d) Subject

Air Transport Association (ATA) of America Code 29: Hydraulic Power.

(e) Reason

This AD was prompted by a report of an electrical arc and hydraulic haze in the wheel bay of the left-hand main landing gear (MLG) possibly resulting from chafing between the hydraulic high pressure hose and electrical wiring of the green electrical motor pump (EMP). We are issuing this AD to detect and correct chafing of hydraulic pressure hoses and electrical wiring of the green EMP, which in combination with a system failure, could cause an uncontrolled and undetected fire in the MLG bay.

(f) Compliance

You are responsible for having the actions required by this AD performed within the compliance times specified, unless the actions have already been done.

(g) Installing Placard and Revising Airplane Flight Manual (AFM)

For all airplanes, as of the effective date of this AD, the in-flight use of green EMPs is prohibited. Before the next flight, do the actions specified in paragraphs (g)(1) and (g)(2) of this AD.

(1) Install in the cockpit on the hydraulic power overhead panel 427VU, a locally manufactured self-adhesive placard temporarily prohibiting the in-flight use of the green EMPs, in accordance with the

instructions in Airbus All Operators Telex A310–29A2101, Revision 01, dated April 12, 2011 (for airplanes equipped with EATON (formerly VICKERS) hydraulic EMPs); or Airbus All Operators Telex A310–29A2102, dated April 12, 2011 (for airplanes equipped with PARKER (formerly ABEX) hydraulic EMPs).

(2) Revise the Limitations section of the applicable AFM to prohibit the in-flight use of the green EMPs. This may be accomplished by inserting a copy of this AD into the Limitations section of the AFM.

(h) Inspecting for Damage and Chafing

Within 500 flight hours or 4 months after the effective date of this AD, whichever occurs first, do a one-time general visual inspection for correct condition (i.e., no damage and no chafing) and correct installation of the hydraulic pressure hoses, electrical conduits, feeder cables, and associated clamping devices at frame 54, as well as the electrical conduits and feeder cables underneath the clamps (including removal of the concerned clamps), in accordance with the instructions in Airbus All Operators Telex A310–29A2101, Revision 01, dated April 12, 2011 (for airplanes equipped with EATON (formerly VICKERS) hydraulic EMPs); or Airbus All Operators Telex A310–29A2102, dated April 12, 2011 (for airplanes equipped with PARKER (formerly ABEX) hydraulic EMPs). If any incorrect installation is found, before further flight, install the affected parts correctly, in accordance with Airbus All Operators Telex A310–29A2101, Revision 01, dated April 12, 2011 (for airplanes equipped with EATON (formerly VICKERS) hydraulic EMPs); or Airbus All Operators Telex A310–29A2102, dated April 12, 2011 (for airplanes equipped with PARKER (formerly ABEX) hydraulic EMPs).

(1) If any damage or chafing marks are found during the inspection required by paragraph (h) of this AD, before further flight, replace or repair the affected parts (hydraulic pressure hoses, electrical conduits, feeder cables, clamps, and spacer, if installed), in accordance with the instructions in Airbus All Operators Telex A310–29A2101, Revision 01, dated April 12, 2011 (for airplanes equipped with EATON (formerly VICKERS) hydraulic EMPs); or Airbus All Operators Telex A310–29A2102, dated April 12, 2011 (for airplanes equipped with PARKER (formerly ABEX) hydraulic EMPs).

(2) Before further flight after compliance with the requirements of paragraph (h) of this AD, as applicable, remove the placard required by paragraph (g)(1) of this AD; and remove the revision of the Limitations section of the AFM, as required by paragraph (g)(2) of this AD; from the airplane and the AFM, respectively.

(i) Other FAA AD Provisions

The following provisions also apply to this AD:

(1) *Alternative Methods of Compliance (AMOCs):* The Manager, International Branch, ANM–116, FAA, has the authority to approve AMOCs for this AD, if requested using the procedures found in 14 CFR 39.19. In accordance with 14 CFR 39.19, send your request to your principal inspector or local Flight Standards District Office, as appropriate. If sending information directly to the International Branch, send it to ATTN: Dan Rodina, Aerospace Engineer, International Branch, ANM–116, Transport Airplane Directorate, FAA, 1601 Lind Avenue SW., Renton, Washington 98057–3356; telephone (425) 227–2125; fax (425) 227–1149. Information may be emailed to: *9-ANM-116-AMOC-REQUESTS@faa.gov.* Before using any approved AMOC, notify your appropriate principal inspector, or lacking a principal inspector, the manager of the local flight standards district office/certificate holding district office. The AMOC approval letter must specifically reference this AD.

(2) *Airworthy Product:* For any requirement in this AD to obtain corrective actions from a manufacturer or other source, use these actions if they are FAA-approved. Corrective actions are considered FAA-approved if they are approved by the State of Design Authority (or their delegated agent). You are required to assure the product is airworthy before it is returned to service.

(j) Related Information

Refer to MCAI EASA Airworthiness Directive 2011–0071, dated April 18, 2011; Airbus All Operators Telex A310–29A2101, Revision 01, dated April 12, 2011; and Airbus All Operators Telex A310–29A2102, dated April 12, 2011; for related information.

(k) Material Incorporated by Reference

(1) You must use the following service information to do the actions required by this AD, unless the AD specifies otherwise. The Director of the Federal Register approved the incorporation by reference (IBR) of the following service information under 5 U.S.C. 552(a) and 1 CFR part 51:

(i) Airbus All Operators Telex A310–29A2101, Revision 01, dated April 12, 2011. The document number, revision level, and issue date of this document is specified only on the first page of the document.

(ii) Airbus All Operators Telex A310–29A2102, dated April 12, 2011. The document number, revision level, and issue date of this document is specified only on the first page of the document.

(2) For service information identified in this AD, contact Airbus SAS—EAW (Airworthiness Office), 1 Rond Point Maurice Bellonte, 31707 Blagnac Cedex, France; telephone +33 5 61 93 36 96; fax +33 5 61 93 44 51; email: *account.airworth-eas@airbus.com;* Internet *http://www.airbus.com.*

(3) You may review copies of the service information at the FAA, Transport Airplane Directorate, 1601 Lind Avenue SW., Renton, Washington. For information on the availability of this material at the FAA, call 425–227–1221.

(4) You may also review copies of the service information that is incorporated by reference at the National Archives and Records Administration (NARA). For information on the availability of this material at an NARA facility, call 202–741–6030, or go to *http://www.archives.gov/federal_register/code_of_federal_regulations/ibr_locations.html.*

Issued in Renton, Washington, on April 12, 2012.

John P. Piccola,

Acting Manager, Transport Airplane Directorate, Aircraft Certification Service.

[FR Doc. 2012–9475 Filed 4–25–12; 8:45 am]

BILLING CODE 4910–13–P

DEPARTMENT OF TRANSPORTATION

Federal Aviation Administration

14 CFR Part 39

[Docket No. FAA–2010–0277; Directorate Identifier 2009–NM–217–AD; Amendment 39–17031; AD 2012–08–14]

RIN 2120–AA64

Airworthiness Directives; The Boeing Company Airplanes

AGENCY: Federal Aviation Administration (FAA), DOT.

ACTION: Final rule.

SUMMARY: We are adopting a new airworthiness directive (AD) for certain The Boeing Company Model 767 airplanes. This AD was prompted by reports of cracking in the upper wing skin at the fastener holes common to the pitch load fittings of the inboard and outboard front spar, which could result in the loss of the strut-to-wing upper link load path and possible separation of a strut and engine from the airplane during flight. This AD requires repetitive inspections to detect fatigue cracking in the wing skin, and corrective actions if necessary. We are issuing this AD to correct the unsafe condition on these products.

DATES: This AD is effective May 31, 2012.

The Director of the Federal Register approved the incorporation by reference of a certain publication listed in the AD as of May 31, 2012.

ADDRESSES: For service information identified in this AD, contact Boeing Commercial Airplanes, Attention: Data & Services Management, P.O. Box 3707, MC 2H–65, Seattle, Washington 98124–2207; telephone 206–544–5000, extension 1; fax 206–766–5680; email *me.boecom@boeing.com;* Internet *https://www.myboeingfleet.com.* You may review copies of the referenced service information at the FAA, Transport Airplane Directorate, 1601 Lind Avenue SW., Renton, Washington. For information on the availability of this material at the FAA, call 425–227–1221.

Examining the AD Docket

You may examine the AD docket on the Internet at *http://*

www.regulations.gov; or in person at the Docket Management Facility between 9 a.m. and 5 p.m., Monday through Friday, except Federal holidays. The AD docket contains this AD, the regulatory evaluation, any comments received, and other information. The address for the Docket Office (phone: 800–647–5527) is Document Management Facility, U.S. Department of Transportation, Docket Operations, M–30, West Building Ground Floor, Room W12–140, 1200 New Jersey Avenue SE., Washington, DC 20590.

FOR FURTHER INFORMATION CONTACT:

Berhane Alazar, Aerospace Engineer, Airframe Branch, ANM–120S, FAA, Seattle Aircraft Certification Office (ACO), 1601 Lind Avenue SW., Renton, Washington 98057–3356; phone: 425–917–6577; fax: 425–917–6590; email: *berhane.alazar@faa.gov.*

SUPPLEMENTARY INFORMATION:

Discussion

We issued a supplemental notice of proposed rulemaking (SNPRM) to amend 14 CFR part 39 to include an AD that would apply to the specified products. That SNPRM was published in the **Federal Register** on October 11, 2011 (76 FR 62663). The original NPRM (75 FR 15357, March 29, 2010) proposed to require repetitive inspections to detect fatigue cracking in the upper wing skin at the fastener holes common to the pitch load fittings of the inboard and outboard front spar, and corrective actions if necessary. The SNPRM proposed to revise that NPRM by reducing compliance times.

Comments

We gave the public the opportunity to participate in developing this AD. The following presents the comments received on the SNPRM (76 FR 62663, October 11, 2011) and the FAA's response to each comment.

Supportive Comment

Boeing concurs with the contents of the SNPRM (76 FR 62663, October 11, 2011).

Request for Relief From Alternative Methods of Compliance (AMOC) Requirement

Aviation Partners Boeing (APB) requested that we revise the SNPRM (76 FR 62663, October 11, 2011) to state that supplemental type certificate (STC) ST01920SE (*http://rgl.faa.gov/Regulatory_and_Guidance_Library/rgstc.nsf/0/082838ee177dbf62862576a4005cdfc0/$FILE/ST01920SE.pdf*), has no impact on the inspection intervals and corrective actions. APB stated that structural analysis shows that the inspection intervals and required corrective actions in the SNPRM are unaffected by the installation of the APB winglets; therefore, there is no need for an AMOC.

We agree with the request. We must receive a request for approval of an AMOC, as required by 14 CFR 39.17 (Section 39.17 of the Federal Aviation Regulations), if a change in a product affects the ability to accomplish the actions required by the AD. We agree that the referenced STC does not affect accomplishment of the requirements of this AD, and an AMOC is not necessary for a ''change in product'' AMOC approval request. We have therefore added this provision in new Note 1 to paragraph (c) of this AD.

Request To Revise Paragraph (g) of the SNPRM (76 FR 62663, October 11, 2011)

Delta requested that we revise paragraph (g) of the SNPRM (76 FR 62663, October 11, 2011) to include the following statement:

> If, during opening for access to perform Part 2 inspection [of the Accomplishment Instructions of Boeing Alert Service Bulletin 767–57A0117, Revision 1, dated March 2, 2011], a freeze plug is found in the upper skin at any fastener location included in the service bulletin, then the inspections per Part 2 must be discontinued, and Part 1 inspections must be used for that wing for that visit and for all subsequent repeat inspections.

Delta stated that since open-hole eddy current inspections of any freeze plug would not detect cracks, the requirement to use Part 2 inspections should not be applied to any freeze plug including previously accomplished repairs.

Although we agree with the commenter's characterization of the requirements, we disagree that it is necessary to make this distinction in the AD. Boeing Alert Service Bulletin 767–57A0117, Revision 1, dated March 2, 2011, clearly states which inspection must be done, but we have added ''as applicable'' in the first sentence of paragraph (g) of this AD, to clarify that only the actions that apply to the individual airplane are required.

Additional Changes to This Final Rule

We have revised the heading and wording for paragraph (i) of this AD. These changes do not affect the intent of this AD.

Conclusion

We reviewed the relevant data, considered the comments received, and determined that air safety and the public interest require adopting the AD with the changes described previously and minor editorial changes. We have determined that these minor changes:

- Are consistent with the intent that was proposed in the SNPRM (76 FR 62663, October 11, 2011) for correcting the unsafe condition; and
- Do not add any additional burden upon the public than was already proposed in the SNPRM (76 FR 62663, October 11, 2011).

We also determined that these changes will not increase the economic burden on any operator or increase the scope of the AD.

Costs of Compliance

We estimate that this AD affects 417 airplanes of U.S. registry.

We estimate the following costs to comply with this AD:

ESTIMATED COSTS

Action	Labor cost	Parts cost	Cost per product	Cost on U.S. operators
Inspection	10 work-hours × $85 per hour = $850 per inspection cycle	$28,836	$29,686	$12,379,062

We estimate the following costs to do any necessary repairs that would be required based on the results of the inspection. We have no way of determining the number of aircraft that might need these repairs:

ON-CONDITION COSTS

Action	Labor cost	Parts cost	Cost per product
Hole repair	1 work-hour per hole × maximum 48 holes per airplane × $85 per hour = up to $4,080 per airplane.	$0	Up to $4,080.
Fastener replacement	1 work-hour per hole × maximum 48 holes per airplane × $85 per hour = up to $4,080 per airplane.	0	Up to $4,080.
Freeze plug repair	1 work-hour per hole × maximum 48 holes per airplane × $85 per hour = up to $4,080 per airplane.	0	Up to $4,080.

Authority for This Rulemaking

Title 49 of the United States Code specifies the FAA's authority to issue rules on aviation safety. Subtitle I, section 106, describes the authority of the FAA Administrator. Subtitle VII: Aviation Programs, describes in more detail the scope of the Agency's authority.

We are issuing this rulemaking under the authority described in Subtitle VII, Part A, Subpart III, Section 44701: ''General requirements.'' Under that section, Congress charges the FAA with promoting safe flight of civil aircraft in air commerce by prescribing regulations for practices, methods, and procedures the Administrator finds necessary for safety in air commerce. This regulation is within the scope of that authority because it addresses an unsafe condition that is likely to exist or develop on products identified in this rulemaking action.

Regulatory Findings

This AD will not have federalism implications under Executive Order 13132. This AD will not have a substantial direct effect on the States, on the relationship between the national government and the States, or on the distribution of power and responsibilities among the various levels of government.

For the reasons discussed above, I certify that this AD:

(1) Is not a ''significant regulatory action'' under Executive Order 12866,

(2) Is not a ''significant rule'' under DOT Regulatory Policies and Procedures (44 FR 11034, February 26, 1979),

(3) Will not affect intrastate aviation in Alaska, and

(4) Will not have a significant economic impact, positive or negative, on a substantial number of small entities under the criteria of the Regulatory Flexibility Act.

List of Subjects in 14 CFR Part 39

Air transportation, Aircraft, Aviation safety, Incorporation by reference, Safety.

Adoption of the Amendment

Accordingly, under the authority delegated to me by the Administrator, the FAA amends 14 CFR part 39 as follows:

PART 39—AIRWORTHINESS DIRECTIVES

■ 1. The authority citation for part 39 continues to read as follows:

Authority: 49 U.S.C. 106(g), 40113, 44701.

§ 39.13 [Amended]

■ 2. The FAA amends § 39.13 by adding the following new airworthiness directive (AD):

2012–08–14 The Boeing Company: Amendment 39–17031; Docket No. FAA–2010–0277; Directorate Identifier 2009–NM–217–AD.

(a) Effective Date

This AD is effective May 31, 2012.

(b) Affected ADs

None.

(c) Applicability

This AD applies to The Boeing Company Model 767–200, –300, –300F, and –400ER series airplanes; certificated in any category; as identified in Boeing Alert Service Bulletin 767–57A0117, Revision 1, dated March 2, 2011.

Note 1 to paragraph (c) of this AD: Supplemental Type Certificate (STC) ST01920SE (*http://rgl.faa.gov/Regulatory_and_Guidance_Library/rgstc.nsf/0/082838ee177dbf62862576a4005cdfc0/$FILE/ST01920SE.pdf*) does not affect the ability to accomplish the actions required by this AD. Therefore, for airplanes on which STC ST01920SE is installed, a ''change in product'' alternative method of compliance (AMOC) approval request is not necessary to comply with the requirements of 14 CFR 39.17. For all other AMOC requests, the operator must request approval for an AMOC according to paragraph (j) of this AD.

(d) Subject

Joint Aircraft System Component (JASC)/Air Transport Association (ATA) of America Code 57, Wings.

(e) Unsafe Condition

This AD was prompted by reports of cracking in the upper wing skin at the fastener holes common to the pitch load fittings of the inboard and outboard front spar. We are issuing this AD to detect and correct fatigue cracking in the upper surface of the upper wing skin at the fastener holes common to the pitch load fittings of the inboard and outboard front spar, which could result in the loss of the strut-to-wing upper link load path and possible separation of a strut and engine from the airplane during flight.

(f) Compliance

Comply with this AD within the compliance times specified, unless already done.

(g) Initial and Repetitive Inspections

Except as provided by paragraph (h) of this AD, at the applicable time specified in paragraph 1.E., ''Compliance,'' of Boeing Alert Service Bulletin 767–57A0117, Revision 1, dated March 2, 2011: Do detailed and ultrasonic inspections, or do an open-hole high-frequency eddy current inspection, as applicable, to detect cracking in the upper surface of the upper wing skin at the fastener holes common to the pitch load fittings of the inboard and outboard front spar; and do all applicable corrective actions; in accordance with the Accomplishment Instructions of Boeing Alert Service Bulletin 767–57A0117, Revision 1, dated March 2, 2011, except as required by paragraph (h) of this AD. Do all applicable corrective actions before further flight. Repeat the applicable inspections thereafter at intervals not to exceed the applicable time specified in paragraph 1.E., ''Compliance,'' of Boeing Alert Service Bulletin 767–57A0117, Revision 1, dated March 2, 2011.

(h) Exceptions to the Service Bulletin

(1) If any cracking is found during any inspection required by this AD, and Boeing Alert Service Bulletin 767–57A0117, Revision 1, dated March 2, 2011, specifies to contact Boeing for additional instructions: Before further flight, repair the cracking using a method approved in accordance with the procedures specified in paragraph (j) of this AD.

(2) Where Boeing Alert Service Bulletin 767–57A0117, Revision 1, dated March 2, 2011, specifies a compliance time after the date of the original issue of Boeing Alert Service Bulletin 767–57A0117, dated October 1, 2009: This AD requires compliance within the specified compliance time after the effective date of this AD.

(i) Credit for Previous Actions

This paragraph provides credit for the actions required by paragraph (g) of this AD, if those actions were performed before the effective date of this AD using Boeing Alert

Service Bulletin 767–57A0117, dated October 1, 2009.

(j) Alternative Methods of Compliance (AMOCs)

(1) The Manager, Seattle Aircraft Certification Office (ACO), FAA, has the authority to approve AMOCs for this AD, if requested using the procedures found in 14 CFR 39.19. In accordance with 14 CFR 39.19, send your request to your principal inspector or local Flight Standards District Office, as appropriate. If sending information directly to the manager of the ACO, send it to the attention of the person identified in the Related Information section of this AD. Information may be emailed to: *9-ANM-Seattle-ACO-AMOC-Requests@faa.gov*.

(2) Before using any approved AMOC, notify your appropriate principal inspector, or lacking a principal inspector, the manager of the local flight standards district office/ certificate holding district office.

(3) An AMOC that provides an acceptable level of safety may be used for any repair required by this AD if it is approved by the Boeing Commercial Airplanes Organization Designation Authorization (ODA) that has been authorized by the Manager, Seattle Aircraft Certification Office (ACO) to make those findings. For a repair method to be approved, the repair must meet the certification basis of the airplane, and the approval must specifically refer to this AD.

(k) Related Information

For more information about this AD, contact Berhane Alazar, Aerospace Engineer, Airframe Branch, ANM–120S, FAA, Seattle Aircraft Certification Office (ACO), 1601 Lind Avenue SW., Renton, Washington 98057–3356; phone: 425–917–6577; fax: 425–917–6590; email: *berhane.alazar@faa.gov*. Or, email information to *9–ANM–Seattle-ACO–AMOC–Requests@faa.gov*.

(l) Material Incorporated by Reference

(1) You must use the following service information to do the actions required by this AD, unless the AD specifies otherwise. The Director of the Federal Register approved the incorporation by reference (IBR) of the following service information under 5 U.S.C. 552(a) and 1 CFR part 51.

(i) Boeing Alert Service Bulletin 767–57A0117, Revision 1, dated March 2, 2011.

(2) For service information identified in this AD, contact Boeing Commercial Airplanes, Attention: Data & Services Management, P.O. Box 3707, MC 2H–65, Seattle, Washington 98124–2207; telephone 206–544–5000, extension 1; fax 206–766–5680; email *me.boecom@boeing.com;* Internet *https://www.myboeingfleet.com*.

(3) You may review copies of the service information at the FAA, Transport Airplane Directorate, 1601 Lind Avenue SW., Renton, Washington. For information on the availability of this material at the FAA, call 425–227–1221.

(4) You may also review copies of the service information that is incorporated by reference at the National Archives and Records Administration (NARA). For information on the availability of this material at NARA, call 202–741–6030, or go to: *http://www.archives.gov/federal-register/cfr/ibr_locations.html.*

Issued in Renton, Washington, on April 11, 2012.

John P. Piccola,

Acting Manager, Transport Airplane Directorate, Aircraft Certification Service.

[FR Doc. 2012–9949 Filed 4–25–12; 8:45 am]

BILLING CODE 4910–13–P

DEPARTMENT OF HOMELAND SECURITY

Coast Guard

33 CFR Part 165

[Docket No. USCG–2012–0001]

RIN 1625–AA00

Safety Zone; Magothy River, Sillery Bay, MD

AGENCY: Coast Guard, DHS.

ACTION: Final rule.

SUMMARY: The Coast Guard is establishing a safety zone in certain waters of the Magothy River, in Sillery Bay, Maryland. This safety zone is necessary to provide for the safety of life, property and the environment. This safety zone restricts the movement of vessels throughout the regulated area during The Bumper Bash, held annually on the fourth Saturday of July.

DATES: This rule is effective May 29, 2012.

ADDRESSES: Comments and material received from the public, as well as documents mentioned in this preamble as being available in the docket, are part of docket USCG–2012–0001 and are available online by going to *http://www.regulations.gov,* inserting USCG–2012–0001 in the ''Keyword'' box, and then clicking ''Search.'' This material is also available for inspection or copying at the Docket Management Facility (M–30), U.S. Department of Transportation, West Building Ground Floor, Room W12–140, 1200 New Jersey Avenue SE., Washington, DC 20590, between 9 a.m. and 5 p.m., Monday through Friday, except Federal holidays.

FOR FURTHER INFORMATION CONTACT: If you have questions on this rule, call or email Mr. Ronald Houck, Sector Baltimore Waterways Management Division, Coast Guard; telephone 410–576–2674, email *Ronald.L.Houck@uscg.mil*. If you have questions on viewing the docket, call Renee V. Wright, Program Manager, Docket Operations, telephone 202–366–9826.

SUPPLEMENTARY INFORMATION:

Regulatory Information

On February 27, 2012, we published a notice of proposed rulemaking (NPRM) entitled ''Safety Zone; Magothy River, Sillery Bay, MD'' in the **Federal Register** (77 FR 11423). We received no comments on the proposed rule. No public meeting was requested, and none was held.

Basis and Purpose

Each year, on the fourth Saturday in July, hundreds of recreational boaters meet in Sillery Bay at Dobbins Island, Maryland for a gathering called ''The Bumper Bash.'' The activity began in 2007. Due to the growing presence of boaters in recent years, the annual gathering has become increasingly congested. In recent years, an estimated 700 recreational boats were anchored or moored alongside other boats (rafted). The crowds of persons on recreational vessels or other water craft create large lines of rafted boats filling in the beachfront area of Dobbins Island. The persons and vessels exceeded a safe limit. Accidental drownings, personnel injuries, boat fires, boat capsizings and sinkings, and boating collisions are safety concerns during such overcrowded events. Access on the water for emergency response to the beach area is critical. The Coast Guard has the authority to impose appropriate controls on activities that may pose a threat to persons, vessels and facilities under its jurisdiction. The Coast Guard sees the need for a permanent safety zone that will be enforced annually on the fourth Saturday in July, during a gathering of persons on recreational vessels and other water craft held in the Magothy River, in Sillery Bay, Maryland. The zone is needed to control movement within a waterway that is expected to be populated by persons and vessels seeking to attend The Bumper Bash activity.

Background

The Coast Guard anticipates a large recreational boating fleet in the Magothy River, in Sillery Bay, during The Bumper Bash at Dobbins Island, Maryland annually on the fourth Saturday in July. Due to the need to provide for the safety of persons and vessels within the regulated area vessel traffic will be restricted during the activity.

The purpose of this rule is to promote maritime safety, and to protect the environment and mariners transiting the area from the potential hazards associated with a large gathering of recreational vessels and other watercraft along a confined beachfront area with

swimmers and others present. This rule establishes a safety zone in all waters of the Magothy River, in Sillery Bay, contained within lines connecting the following positions: From position latitude 39°04′40″ N, longitude 076°27′44″ W; thence to position latitude 39°04′48″ N, longitude 076°27′19″ W; thence to position latitude 39°04′59″ N, longitude 076°27′45″ W; thence to position latitude 39°04′59″ N, longitude 076°28′01″ W; thence to position latitude 39°04′41″ N, longitude 076°27′51″ W; thence to the point of origin at position latitude 39°04′40″ N, longitude 076°27′44″ W. All coordinates reference Datum NAD 1983. The rule will impact the movement of all persons and vessels in the regulated area, and will limit the density of vessels and other watercraft operating, remaining or anchoring within the regulated area at the discretion of the Captain of the Port Baltimore, to ensure an open water route remains accessible to law enforcement and emergency personnel during the effective period. Public vessels located within the regulated area will not contribute to the density determination.

Discussion of Comments and Changes

The Coast Guard received no comments in response to the NPRM. No public meeting was requested and none was held.

Regulatory Analyses

We developed this rule after considering numerous statutes and executive orders related to rulemaking. Below we summarize our analyses based on 13 of these statutes or executive orders.

Regulatory Planning and Review

This rule is not a significant regulatory action under section 3(f) of Executive Order 12866, Regulatory Planning and Review, and does not require an assessment of potential costs and benefits under section 6(a)(3) of that Order. The Office of Management and Budget has not reviewed it under that Order. The effect of this regulation will not be significant due to the limited size and duration that the regulated area will be in effect and vessels transiting the Magothy River may proceed safely around the zone. In addition, notifications will be made to the maritime community via marine information broadcasts so mariners may adjust their plans accordingly.

Small Entities

Under the Regulatory Flexibility Act (5 U.S.C. 601–612), we have considered whether this rule would have a significant economic impact on a substantial number of small entities. The term ''small entities'' comprises small businesses, not-for-profit organizations that are independently owned and operated and are not dominant in their fields, and governmental jurisdictions with populations of less than 50,000.

The Coast Guard certifies under 5 U.S.C. 605(b) that this rule will not have a significant economic impact on a substantial number of small entities. This rule may affect the following entities, some of which might be small entities: The owners or operators of vessels intending to operate, remain or anchor within the safety zone, from 8 a.m. until 10 p.m. on the fourth Saturday in July annually. This safety zone will not have a significant economic impact on a substantial number of small entities for the following reasons. Traffic would be allowed to pass within the safety zone with the permission of the Captain of the Port Baltimore. Vessels transiting the Magothy River may proceed safely around the zone. Also, the Coast Guard will issue maritime advisories widely available to users of the waterway before the effective period.

Assistance for Small Entities

Under section 213(a) of the Small Business Regulatory Enforcement Fairness Act of 1996 (Pub. L. 104–121), in the NPRM we offered to assist small entities in understanding the rule so that they could better evaluate its effects on them and participate in the rulemaking process.

Small businesses may send comments on the actions of Federal employees who enforce, or otherwise determine compliance with, Federal regulations to the Small Business and Agriculture Regulatory Enforcement Ombudsman and the Regional Small Business Regulatory Fairness Boards. The Ombudsman evaluates these actions annually and rates each agency's responsiveness to small business. If you wish to comment on actions by employees of the Coast Guard, call 1–888–REG–FAIR (1–888–734–3247). The Coast Guard will not retaliate against small entities that question or complain about this rule or any policy or action of the Coast Guard.

Collection of Information

This rule calls for no new collection of information under the Paperwork Reduction Act of 1995 (44 U.S.C. 3501–3520).

Federalism

A rule has implications for federalism under Executive Order 13132, Federalism, if it has a substantial direct effect on State or local governments and would either preempt State law or impose a substantial direct cost of compliance on them. We have analyzed this rule under that Order and have determined that it does not have implications for federalism.

Unfunded Mandates Reform Act

The Unfunded Mandates Reform Act of 1995 (2 U.S.C. 1531–1538) requires Federal agencies to assess the effects of their discretionary regulatory actions. In particular, the Act addresses actions that may result in the expenditure by a State, local, or tribal government, in the aggregate, or by the private sector of $100,000,000 (adjusted for inflation) or more in any one year. Though this rule will not result in such an expenditure, we do discuss the effects of this rule elsewhere in this preamble.

Taking of Private Property

This rule will not cause a taking of private property or otherwise have taking implications under Executive Order 12630, Governmental Actions and Interference with Constitutionally Protected Property Rights.

Civil Justice Reform

This rule meets applicable standards in sections 3(a) and 3(b)(2) of Executive Order 12988, Civil Justice Reform, to minimize litigation, eliminate ambiguity, and reduce burden.

Protection of Children

We have analyzed this rule under Executive Order 13045, Protection of Children from Environmental Health Risks and Safety Risks. This rule is not an economically significant rule and does not create an environmental risk to health or risk to safety that may disproportionately affect children.

Indian Tribal Governments

This rule does not have tribal implications under Executive Order 13175, Consultation and Coordination with Indian Tribal Governments, because it does not have a substantial direct effect on one or more Indian tribes, on the relationship between the Federal Government and Indian tribes, or on the distribution of power and responsibilities between the Federal Government and Indian tribes.

Energy Effects

We have analyzed this rule under Executive Order 13211, Actions Concerning Regulations That

Significantly Affect Energy Supply, Distribution, or Use. We have determined that it is not a ''significant energy action'' under that order because it is not a ''significant regulatory action'' under Executive Order 12866 and is not likely to have a significant adverse effect on the supply, distribution, or use of energy. The Administrator of the Office of Information and Regulatory Affairs has not designated it as a significant energy action. Therefore, it does not require a Statement of Energy Effects under Executive Order 13211.

Technical Standards

The National Technology Transfer and Advancement Act (NTTAA) (15 U.S.C. 272 note) directs agencies to use voluntary consensus standards in their regulatory activities unless the agency provides Congress, through the Office of Management and Budget, with an explanation of why using these standards would be inconsistent with applicable law or otherwise impractical. Voluntary consensus standards are technical standards (e.g., specifications of materials, performance, design, or operation; test methods; sampling procedures; and related management systems practices) that are developed or adopted by voluntary consensus standards bodies.

This rule does not use technical standards. Therefore, we did not consider the use of voluntary consensus standards.

Environment

We have analyzed this rule under Department of Homeland Security Management Directive 023–01 and Commandant Instruction M16475.lD, which guide the Coast Guard in complying with the National Environmental Policy Act of 1969 (NEPA) (42 U.S.C. 4321–4370f), and have concluded this action is one of a category of actions that do not individually or cumulatively have a significant effect on the human environment. This rule is categorically excluded, under figure 2–1, paragraph (34)(g), of the Instruction. This rule involves certain regulations for vessels navigating the waters of the Magothy River, in Sillery Bay, and fits within the category in paragraph 34(g) because it establishes a safety zone.

An environmental analysis checklist and a categorical exclusion determination are available in the docket where indicated under **ADDRESSES**.

List of Subjects in 33 CFR Part 165

Harbors, Marine safety, Navigation (water), Reporting and recordkeeping requirements, Security measures, Waterways.

For the reasons discussed in the preamble, the Coast Guard amends 33 CFR part 165 as follows:

PART 165—REGULATED NAVIGATION AREAS AND LIMITED ACCESS AREAS

■ 1. The authority citation for part 165 continues to read as follows:

Authority: 33 U.S.C. 1231; 46 U.S.C. Chapter 701; 50 U.S.C. 191, 195; 33 CFR 1.05–1(g), 6.04–1, 6.04–6, and 160.5; Pub. L. 107–295, 116 Stat. 2064; Department of Homeland Security Delegation No. 0170.1.

■ 2. Add § 165.513 to read as follows:

§ 165.513 Safety Zone; Magothy River, Sillery Bay, MD.

(a) *Regulated area.* The following area is a safety zone: All waters of the Magothy River, in Sillery Bay, contained within lines connecting the following positions: From position latitude 39°04′40″ N, longitude 076°27′44″ W; thence to position latitude 39°04′48″ N, longitude 076°27′19″ W; thence to position latitude 39°04′59″ N, longitude 076°27′45″ W; thence to position latitude 39°04′59″ N, longitude 076°28′01″ W; thence to position latitude 39°04′41″ N, longitude 076°27′51″ W; thence to the point of origin at position latitude 39°04′40″ N, longitude 076°27′44″ W. All coordinates reference Datum NAD 1983.

(b) *Definitions.* As used in this section:

(1) *Captain of the Port Baltimore* means the Commander, U.S. Coast Guard Sector Baltimore, Maryland.

(2) *Designated representative* means any Coast Guard commissioned, warrant, or petty officer who has been authorized by the Captain of the Port Baltimore to assist in enforcing the safety zone described in paragraph (a) of this section.

(c) *Regulations.* (1) All persons are required to comply with the general regulations governing safety zones found in 33 CFR 165.23.

(2) All vessels and persons are prohibited from entering and accessing this safety zone, except as authorized by the Captain of the Port Baltimore or his or her designated representative.

(3) Persons or vessels requiring entry into or passage within the safety zone must request authorization from the Captain of the Port Baltimore or his or her designated representative, by telephone at (410) 576–2693 or by marine band radio on VHF–FM Channel 16 (156.8 MHz), from 8 a.m. until 10 p.m. on the fourth Saturday in July annually. All Coast Guard vessels enforcing this safety zone can be contacted on marine band radio VHF–FM Channel 16 (156.8 MHz).

(4) All vessels and persons must comply with instructions of the Captain of the Port Baltimore or his or her designated representative.

(5) The operator of any vessel entering or located within this safety zone shall:

(i) Travel at no-wake speed,

(ii) Stop the vessel immediately upon being directed to do so by any commissioned, warrant or petty officer on board a vessel displaying a Coast Guard Ensign, and

(iii) Proceed as directed by any commissioned, warrant or petty officer on board a vessel displaying a Coast Guard Ensign.

(d) *Enforcement.* The U.S. Coast Guard may be assisted in the patrol and enforcement of the safety zone by any Federal, State, and local agencies.

(e) *Enforcement period.* This section will be enforced from 8 a.m. until 10 p.m. on the fourth Saturday in July annually.

Dated: April 4, 2012.

Mark P. O'Malley,

Captain, U.S. Coast Guard, Captain of the Port Baltimore.

[FR Doc. 2012–10020 Filed 4–25–12; 8:45 am]

BILLING CODE 9110–04–P

DEPARTMENT OF HOMELAND SECURITY

Coast Guard

33 CFR Part 165

[Docket No. USCG–2012–0190]

RIN 1625–AA00

Safety Zone; Crowley Barge 750–2, Bayou Casotte, Pascagoula, MS

AGENCY: Coast Guard, DHS.

ACTION: Temporary final rule.

SUMMARY: The Coast Guard is establishing a temporary safety zone for the specified waters of Bayou Casotte, Pascagoula, Mississippi. This action is necessary for the protection of persons and vessels on navigable waters during the launch of the Crowley Barge 750–2, particularly small craft in the area that risk being swamped. Entry into, transiting or anchoring in this zone is prohibited to all vessels, mariners, and persons unless specifically authorized by the Captain of the Port (COTP) Mobile or a designated representative.

DATES: *Effective Date:* this rule is effective in the CFR from April 26, 2012 until 11:59 p.m. April 30, 2012. This rule is effective with actual notice for purposes of enforcement beginning 12:01 a.m. April 22, 2012.

ADDRESSES: Documents indicated in this preamble as being available in the docket are part of docket USCG–2012–0190 and are available online by going to *http://www.regulations.gov,* inserting USCG–2012–0190 in the ''Keyword'' box, and then clicking ''Search.'' They are also available for inspection or copying at the Docket Management Facility (M–30), U.S. Department of Transportation, West Building Ground Floor, Room W12–140, 1200 New Jersey Avenue SE., Washington, DC 20590, between 9 a.m. and 5 p.m., Monday through Friday, except Federal holidays and U.S. Coast Guard Sector Mobile (spw), Building 102, Brookley Complex South Broad Street Mobile, AL 36615, between 8:00 a.m. and 3:30 p.m., Monday through Friday, except Federal holidays.

FOR FURTHER INFORMATION CONTACT: If you have questions on this temporary rule, call or email LT Lenell J. Carson, Coast Guard Sector Mobile, Waterways Division; telephone 251–441–5940 or email *Lenell.J.Carson@uscg.mil.* If you have questions on viewing the docket, call Renee V. Wright, Program Manager, Docket Operations, telephone 202–366–9826.

SUPPLEMENTARY INFORMATION:

Regulatory Information

The Coast Guard is issuing this temporary final rule without prior notice and opportunity to comment pursuant to authority under section 4(a) of the Administrative Procedure Act (APA) (5 U.S.C. 553(b)). This provision authorizes an agency to issue a rule without prior notice and opportunity to comment when the agency for good cause finds that those procedures are ''impracticable, unnecessary, or contrary to the public interest.'' Under 5 U.S.C. 553(b)(B), the Coast Guard finds that good cause exists for not publishing a notice of proposed rulemaking (NPRM) with respect to this rule because there is insufficient time to publish a NPRM. The Coast Guard received notification on March 28, 2012 of VT-Halter Pascagoula's intentions to launch the Crowley Barge 750–2 on April 22, 2012. Publishing a NPRM is impracticable because it would unnecessarily delay the required safety zone's effective date. The safety zone is needed to protect persons and vessels from safety hazards associated with the launching of the Crowley Barge 750–2. Additionally, delaying the safety zone for the NPRM process would unnecessarily interfere with launching the barge and its possible commercial and contractual obligations.

Under 5 U.S.C. 553(d)(3), the Coast Guard finds that good cause exists for making this rule effective less than 30 days after publication in the **Federal Register**. The Coast Guard received notification on March 28, 2012 of VT-Halter Pascagoula's intentions to launch the Crowley Barge 750–2 on April 22, 2012. This rule is temporary and will only be enforced for a short duration while the vessel is being launched. Delaying the effective date would be impracticable because immediate action is needed to protect persons and vessels from safety hazards associated with the launching of the Crowley Barge 750–2. Additionally, delaying the safety zone for the NPRM process would unnecessarily interfere with launching the barge and its possible commercial and contractual obligations.

Basis and Purpose

VT-Halter Pascagoula is a ship yard and repair facility located on Bayou Casotte in Pascagoula, Mississippi. The launching of vessels from this facility creates a 3' launch wave that will propagate eastward across the north turning basin of Bayou Casotte Harbor. This wave poses significant safety hazards to vessels, particularly small craft in the area that could potentially be swamped. The Pascagoula Port Authority will clear all vessels from berths north of their public terminal warehouse G and H due to the hazards associated with this wave. The COTP Mobile is establishing a temporary safety zone for a portion of Bayou Casotte, Pascagoula, Mississippi to protect persons and vessels on navigable waters during the launching of the Crowley Barge 750–2.

The COTP anticipates minimal impact on vessel traffic due to this regulation. However, this safety zone is deemed necessary for the protection of life and property within the COTP Mobile zone.

Discussion of Rule

The Coast Guard is establishing a temporary safety zone for a portion of Bayou Casotte, to include all waters between a southern boundary represented by positions, 30°20′42.3″ N, 088°30′26.0″ W and 30°20′42.3″ N, 088°30′33.0″ W and a northern boundary represented by positions, 30°21′06.85″ N, 088°30′29.36″ W and 30°21′09.15″ N, 088°30′24.56″ W. This temporary rule will protect the safety of life and property in this area. Entry into, transiting or anchoring in this zone is prohibited to all vessels, mariners, and persons unless specifically authorized by the COTP Mobile or a designated representative. The COTP may be contacted by telephone at 251–441–5976.

The COTP Mobile or a designated representative will inform the public through broadcast notice to mariners of changes in the effective period for the safety zone. This rule is effective from 12:01 a.m. April 22, 2012 through 11:59 p.m. April 30, 2012. Exact enforcement date and times will be broadcasted via a Safety Broadcast Notice to Mariners.

Regulatory Analyses

We developed this rule after considering numerous statutes and executive orders related to rulemaking. Below we summarize our analyses based on 13 of these statutes or executive orders.

Regulatory Planning and Review

This rule is not a significant regulatory action under section 3(f) of Executive Order 12866, Regulatory Planning and Review, as supplemented by Executive Order 13563, Improving Regulation and Regulatory Review, and does not require an assessment of potential costs and benefits under section 6(a)(3) of that Executive Order 12866 or under section 1 of Executive Order 13563. The Office of Management and Budget has not reviewed it under that those Orders.

The temporary safety zone listed in this rule will restrict vessel traffic from entering, transiting, or anchoring within a small portion of Bayou Casotte Harbor, Pascagoula, Mississippi. The effect of this regulation will not be significant for several reasons: (1) This rule will only affect vessel traffic for a short duration; (2) vessels may request permission from the COTP to transit through the safety zone; and (3) the impacts on routine navigation are expected to be minimal. Notifications to the marine community will be published in the local notice to mariners and a broadcast notice to mariners. These notifications will allow the public to plan operations around the affected area.

Small Entities

Under the Regulatory Flexibility Act (5 U.S.C. 601–612), we have considered whether this rule would have a significant economic impact on a substantial number of small entities. The term ''small entities'' comprises small businesses, not-for-profit organizations that are independently owned and operated and are not dominant in their fields, and governmental jurisdictions with populations of less than 50,000.

The Coast Guard certifies under 5 U.S.C. 605(b) that this rule will not have a significant economic impact on a

substantial number of small entities. This rule will affect the following entities, some of which may be small entities: the owners or operators of vessels intending to transit or anchor in the affected portions of Bayou Casotte Harbor, Pascagoula, Mississippi. This safety zone will not have a significant economic impact on a substantial number of small entities for the following reasons. The zone is limited in size, is of short duration and vessel traffic may request permission from the COTP Mobile or a designated representative to enter or transit through the zone.

Assistance for Small Entities

Under section 213(a) of the Small Business Regulatory Enforcement Fairness Act of 1996 (Pub. L. 104–121), we offer to assist small entities in understanding the rule so that they can better evaluate its effects on them and participate in the rulemaking process.

Small businesses may send comments on the actions of Federal employees who enforce, or otherwise determine compliance with, Federal regulations to the Small Business and Agriculture Regulatory Enforcement Ombudsman and the Regional Small Business Regulatory Fairness Boards. The Ombudsman evaluates these actions annually and rates each agency's responsiveness to small business. If you wish to comment on actions by employees of the Coast Guard, call 1–888–REG–FAIR (1–888–734–3247). The Coast Guard will not retaliate against small entities that question or complain about this rule or any policy or action of the Coast Guard.

Collection of Information

This calls for no new collection of information under the Paperwork Reduction Act of 1995 (44 U.S.C. 3501–3520).

Federalism

A rule has implications for federalism under Executive Order 13132, Federalism, if it has a substantial direct effect on State or local governments and would either preempt State law or impose a substantial direct cost of compliance on them. We have analyzed this rule under that Order and have determined that it does not have implications for federalism.

Unfunded Mandates Reform Act

The Unfunded Mandates Reform Act of 1995 (2 U.S.C. 1531–1538) requires Federal agencies to assess the effects of their discretionary regulatory actions. In particular, the Act addresses actions that may result in the expenditure by a State, local, or tribal government, in the aggregate, or by the private sector of $100,000,000 (adjusted for inflation) or more in any one year. Though this rule will not result in such expenditure, we do discuss the effects of this rule elsewhere in this preamble.

Taking of Private Property

This rule will not cause a taking of private property or otherwise have taking implications under Executive Order 12630, Governmental Actions and Interference with Constitutionally Protected Property Rights.

Civil Justice Reform

This rule meets applicable standards in sections 3(a) and 3(b)(2) of Executive Order 12988, Civil Justice Reform, to minimize litigation, eliminate ambiguity, and reduce burden.

Protection of Children

We have analyzed this rule under Executive Order 13045, Protection of Children from Environmental Health Risks and Safety Risks. This rule is not an economically significant rule and does not create an environmental risk to health or risk to safety that may disproportionately affect children.

Indian Tribal Governments

This rule does not have tribal implications under Executive Order 13175, Consultation and Coordination with Indian Tribal Governments, because it does not have a substantial direct effect on one or more Indian tribes, on the relationship between the Federal Government and Indian tribes, or on the distribution of power and responsibilities between the Federal Government and Indian tribes.

Energy Effects

We have analyzed this rule under Executive Order 13211, Actions Concerning Regulations That Significantly Affect Energy Supply, Distribution, or Use. We have determined that it is not a ''significant energy action'' under that order because it is not a ''significant regulatory action'' under Executive Order 12866 and is not likely to have a significant adverse effect on the supply, distribution, or use of energy. The Administrator of the Office of Information and Regulatory Affairs has not designated it as a significant energy action. Therefore, it does not require a Statement of Energy Effects under Executive Order 13211.

Technical Standards

The National Technology Transfer and Advancement Act (NTTAA) (15 U.S.C. 272 note) directs agencies to use voluntary consensus standards in their regulatory activities unless the agency provides Congress, through the Office of Management and Budget, with an explanation of why using these standards would be inconsistent with applicable law or otherwise impractical. Voluntary consensus standards are technical standards (e.g., specifications of materials, performance, design, or operation; test methods; sampling procedures; and related management systems practices) that are developed or adopted by voluntary consensus standards bodies.

This rule does not use technical standards. Therefore, we did not consider the use of voluntary consensus standards.

Environment

We have analyzed this rule under Department of Homeland Security Management Directive 023–01 and Commandant Instruction M16475.lD, which guide the Coast Guard in complying with the National Environmental Policy Act of 1969 (NEPA) (42 U.S.C. 4321–4370f), and have concluded this action is one of a category of actions which do not individually or cumulatively have a significant effect on the human environment. This rule is categorically excluded, under figure 2–1, paragraph (34)(g), of the Instruction. This rule involves safety for the public and environment and is not expected to result in any significant adverse environmental impact as described in NEPA. An environmental analysis checklist and a categorical exclusion determination will be made available as directed under the **ADDRESSES** section.

List of Subjects in 33 CFR Part 165

Harbors, Marine safety, Navigation (water), Reporting and recordkeeping requirements, Security measures, Waterways.

For the reasons discussed in the preamble, the Coast Guard amends 33 CFR part 165 as follows:

PART 165—REGULATED NAVIGATION AREAS AND LIMITED ACCESS AREAS

■ 1. The authority citation for part 165 continues to read as follows:

Authority: 33 U.S.C. 1231; 46 U.S.C. Chapter 701, 3306, 3703; 50 U.S.C. 191, 195; 33 CFR 1.05–1, 6.04–1, 6.04–6, 160.5; Pub. L. 107–295, 116 Stat. 2064; Department of Homeland Security Delegation No. 0170.1.

■ 2. Add § 165.T08–0190 to read as follows:

§ 165.T08–0190 Safety Zone; Bayou Casotte; Pascagoula, MS.

(a) *Location.* The following area is a temporary safety zone: a portion of Bayou Casotte, to include all waters between a southern boundary represented by positions, 30°20′42.3″ N, 088°30′26.0″ W and 30°20′42.3″ N, 088°30′33.0″ W and a northern boundary represented by positions, 30°21′06.85″ N, 088°30′29.36″ W and 30°21′09.15″ N, 088°30′24.56″ W.

(b) *Enforcement.* This rule will be effective from 12:01 a.m. April 22, 2012 through 11:59 p.m. April 30, 2012. Exact enforcement date and times will be broadcasted via a Safety Broadcast Notice to Mariners.

(c) *Regulations.* (1) In accordance with the general regulations in § 165.23 of this part, entry into this zone is prohibited unless authorized by the Captain of the Port Mobile or a designated representative.

(2) Persons or vessels desiring to enter into or passage through the zone must request permission from the Captain of the Port Mobile or a designated representative. They may be contacted on VHF–FM channels 16 or by telephone at 251–441–5976.

(3) If permission is granted, all persons and vessels shall comply with the instructions of the Captain of the Port or designated representative.

(d) *Informational broadcasts.* The Captain of the Port or a designated representative will inform the public through broadcast notices to mariners of the enforcement period for the safety zone as well as any changes in the planned schedule.

Dated: April 4, 2012.

D.J. Rose,

Captain, U.S. Coast Guard, Captain of the Port Mobile.

[FR Doc. 2012–10215 Filed 4–24–12; 4:15 pm]

BILLING CODE 9110–04–P

ENVIRONMENTAL PROTECTION AGENCY

40 CFR Part 52

[EPA–R03–OAR–2012–0024; FRL–9664–4]

Approval and Promulgation of Air Quality Implementation Plans; Virginia; Removal of Transcontinental Gas Pipe Line Corporation Permit From State Implementation Plan

AGENCY: Environmental Protection Agency (EPA).

ACTION: Direct final rule.

SUMMARY: EPA is taking direct final action to approve a revision to the Virginia State Implementation Plan (SIP). The revision pertains to a Transcontinental Gas Pipe Line Corporation (Transco) operating permit that EPA approved into the Virginia SIP to meet nitrogen oxides (NO_X) reduction requirements for large stationary internal combustion engines under the NO_X SIP Call. Transco Station 175 has permanently shut down, and this revision removes the permit from the Virginia SIP. EPA is approving this revision in accordance with the requirements of the Clean Air Act (CAA).

DATES: This rule is effective on June 25, 2012 without further notice, unless EPA receives adverse written comment by May 29, 2012. If EPA receives such comments, it will publish a timely withdrawal of the direct final rule in the **Federal Register** and inform the public that the rule will not take effect.

ADDRESSES: Submit your comments, identified by Docket ID Number EPA–R03–OAR–2012–0024 by one of the following methods:

A. *www.regulations.gov.* Follow the on-line instructions for submitting comments.

B. *Email: fernandez.cristina@epa.gov.*

C. *Mail:* EPA–R03–OAR–2012–0024, Cristina Fernandez, Associate Director, Office of Air Quality Planning, Mailcode 3AP30, U.S. Environmental Protection Agency, Region III, 1650 Arch Street, Philadelphia, Pennsylvania 19103.

D. *Hand Delivery:* At the previously-listed EPA Region III address. Such deliveries are only accepted during the Docket's normal hours of operation, and special arrangements should be made for deliveries of boxed information.

Instructions: Direct your comments to Docket ID No. EPA–R03–OAR–2012–0024. EPA's policy is that all comments received will be included in the public docket without change, and may be made available online at *www.regulations.gov,* including any personal information provided, unless the comment includes information claimed to be Confidential Business Information (CBI) or other information whose disclosure is restricted by statute. Do not submit information that you consider to be CBI or otherwise protected through *www.regulations.gov* or email. The *www.regulations.gov* Web site is an ''anonymous access'' system, which means EPA will not know your identity or contact information unless you provide it in the body of your comment. If you send an email comment directly to EPA without going through *www.regulations.gov,* your email address will be automatically captured and included as part of the comment that is placed in the public docket and made available on the Internet. If you submit an electronic comment, EPA recommends that you include your name and other contact information in the body of your comment and with any disk or CD–ROM you submit. If EPA cannot read your comment due to technical difficulties and cannot contact you for clarification, EPA may not be able to consider your comment. Electronic files should avoid the use of special characters, any form of encryption, and be free of any defects or viruses.

Docket: All documents in the electronic docket are listed in the *www.regulations.gov* index. Although listed in the index, some information is not publicly available, i.e., CBI or other information whose disclosure is restricted by statute. Certain other material, such as copyrighted material, is not placed on the Internet and will be publicly available only in hard copy form. Publicly available docket materials are available either electronically in *www.regulations.gov* or in hard copy during normal business hours at the Air Protection Division, U.S. Environmental Protection Agency, Region III, 1650 Arch Street, Philadelphia, Pennsylvania 19103. Copies of the State submittal are available at the Virginia Department of Environmental Quality, 629 East Main Street, Richmond, Virginia 23219.

FOR FURTHER INFORMATION CONTACT: Marilyn Powers, (215) 814–2308, or by email at *powers.marilyn@epa.gov.*

SUPPLEMENTARY INFORMATION: Throughout this document, whenever ''we,'' ''us,'' or ''our'' is used, we mean EPA.

I. Background

EPA issued the NO_X SIP Call (63 FR 57356, October 27, 1998) to require 22 eastern states and the District of Columbia to reduce specified amounts of one of the main precursors of ground-level ozone, NO_X, in order to reduce interstate ozone transport. EPA found that the sources in these states emit NO_X in amounts that contribute significantly to nonattainment of the 1-hour ozone national ambient air quality standard (NAAQS) in downwind states. In the NO_X SIP Call, the amount of reductions required by states were calculated based on application of available, highly cost-effective controls on certain source categories of NO_X. These source categories included large fossil fuel-fired electric generating units (EGUs) serving a generator with a capacity greater than 25 megawatts (MWe), fossil fuel-fired non-EGUs (such as large

industrial boilers with a capacity greater than 250 million BTUs per hour (MMBtu/hr), large stationary internal combustion engines, and large cement kilns.

The NO_X SIP Call was challenged by a number of state, industry, and labor groups. On March 3, 2000, the United States Court of Appeals for the District of Columbia Circuit (D.C. Circuit) issued its decision on the NO_X SIP Call. *Michigan* v. *EPA,* 213 F.3rd 663 (D.C. Dir. 2000). While the D.C. Circuit ruled largely in favor of EPA in support of its requirements under the 1-hour ozone NAAQS, it also ruled, in part, against EPA on certain issues. The portions of the NO_X SIP Call that were upheld by the Court were termed ''Phase I'' of the rule, and applies to EGUs and non-EGUs. EPA's response to the remanded portions of the NO_X SIP Call (with several exceptions) was finalized in its April 21, 2004 (69 FR 21604) rulemaking action entitled, ''Interstate Ozone Transport: Response to Court Decisions on the NO_X SIP Call, NO_X SIP Call Technical Amendments, and Section 126 Rules,'' termed ''Phase II'' of the rule. Phase II applies to large stationary internal combustion engines and large cement kilns.

EPA approved Virginia's Phase I NO_X SIP Call submission in a rulemaking dated July 8, 2003 (68 FR 40520). On October 30, 2008 (73 FR 64551), EPA approved Virginia's Phase II submission. A discussion of the relevant portions of the April 21, 2004 rulemaking that pertains to Virginia's requirements under Phase II may be found in the docket for EPA's October 30, 2008 rulemaking (*See* Docket # EPA–R03–OAR–2007–0382). In that rulemaking, EPA approved into the Virginia SIP the federally enforceable state operating permits for four Transco internal combustion engines to address the Commonwealth's emission reduction requirements for Phase II of the NO_X SIP Call. Transco Station 175 located in Fluvanna County, Virginia was one of the sources included in that rulemaking. To meet the requirement for NO_X emissions reductions of 82 percent from large internal combustion engines, the operating permit capped NO_X emissions from Station 175 at 195.43 tons per ozone season. The operating permit requirements for the engines included NO_X emission rate limits and limits on hours of operation during the ozone season to achieve the required emission reductions.

II. Summary of SIP Revision

On November 8, 2011, the Commonwealth of Virginia Department of Environmental Quality (VADEQ) submitted a formal revision to its SIP. The SIP revision consists of a request by the Commonwealth to remove the permit for Transco Station 175 from the Virginia SIP. On July 26, 2011, Transco and VADEQ signed a mutual determination of permanent shutdown for the four large stationary natural gas-fired spark ignited, reciprocating internal combustion engines located at Transco Station 175. The submission includes a copy of the signed determination, which required that operation of the engines cease upon signature of the document, and that any future operation of the engines must be in accordance with Virginia's Prevention of Significant Deterioration (PSD) permit program pursuant to 9VAC5 chapter 80. Should the engines resume operation in the future, VADEQ may be required at that time to revise its SIP as appropriate.

III. General Information Pertaining to SIP Submittals From the Commonwealth of Virginia

In 1995, Virginia adopted legislation that provides, subject to certain conditions, for an environmental assessment (audit) ''privilege'' for voluntary compliance evaluations performed by a regulated entity. The legislation further addresses the relative burden of proof for parties either asserting the privilege or seeking disclosure of documents for which the privilege is claimed. Virginia's legislation also provides, subject to certain conditions, for a penalty waiver for violations of environmental laws when a regulated entity discovers such violations pursuant to a voluntary compliance evaluation and voluntarily discloses such violations to the Commonwealth and takes prompt and appropriate measures to remedy the violations. Virginia's Voluntary Environmental Assessment Privilege Law, Va. Code Sec. 10.1–1198, provides a privilege that protects from disclosure documents and information about the content of those documents that are the product of a voluntary environmental assessment. The Privilege Law does not extend to documents or information (1) that are generated or developed before the commencement of a voluntary environmental assessment; (2) that are prepared independently of the assessment process; (3) that demonstrate a clear, imminent and substantial danger to the public health or environment; or (4) that are required by law.

On January 12, 1998, the Commonwealth of Virginia Office of the Attorney General provided a legal opinion that states that the Privilege Law, Va. Code § 10.1–1198, precludes granting a privilege to documents and information ''required by law,'' including documents and information ''required by Federal law to maintain program delegation, authorization or approval,'' since Virginia must ''enforce Federally authorized environmental programs in a manner that is no less stringent than their Federal counterparts. * * *'' The opinion concludes that ''[r]egarding § 10.1–1198, therefore, documents or other information needed for civil or criminal enforcement under one of these programs could not be privileged because such documents and information are essential to pursuing enforcement in a manner required by Federal law to maintain program delegation, authorization or approval.'' Virginia's Immunity law, Va. Code Sec. 10.1–1199, provides that ''[t]o the extent consistent with requirements imposed by Federal law,'' any person making a voluntary disclosure of information to a state agency regarding a violation of an environmental statute, regulation, permit, or administrative order is granted immunity from administrative or civil penalty. The Attorney General's January 12, 1998 opinion states that the quoted language renders this statute inapplicable to enforcement of any Federally authorized programs, since ''no immunity could be afforded from administrative, civil, or criminal penalties because granting such immunity would not be consistent with Federal law, which is one of the criteria for immunity.''

Therefore, EPA has determined that Virginia's Privilege and Immunity statutes will not preclude the Commonwealth from enforcing its program consistent with the Federal requirements. In any event, because EPA has also determined that a state audit privilege and immunity law can affect only state enforcement and cannot have any impact on Federal enforcement authorities, EPA may at any time invoke its authority under the CAA, including, for example, sections 113, 167, 205, 211 or 213, to enforce the requirements or prohibitions of the state plan, independently of any state enforcement effort. In addition, citizen enforcement under section 304 of the CAA is likewise unaffected by this, or any, state audit privilege or immunity law.

IV. Final Action

EPA is approving the November 8, 2011 submittal from VADEQ that removes the operating permit for Transco Station 175 from the Virginia SIP. EPA is publishing this rule without

prior proposal because the Agency views this as a noncontroversial amendment and anticipates no adverse comment. However, in the ''Proposed Rules'' section of today's **Federal Register**, EPA is publishing a separate document that will serve as the proposal to approve the SIP revision if adverse comments are filed. This rule will be effective on June 25, 2012 without further notice unless EPA receives adverse comment by May 29, 2012. If EPA receives adverse comment, EPA will publish a timely withdrawal in the **Federal Register** informing the public that the rule will not take effect. EPA will address all public comments in a subsequent final rule based on the proposed rule. EPA will not institute a second comment period on this action. Any parties interested in commenting must do so at this time.

V. Statutory and Executive Order Reviews

A. General Requirements

Under the CAA, the Administrator is required to approve a SIP submission that complies with the provisions of the CAA and applicable Federal regulations. 42 U.S.C. 7410(k); 40 CFR 52.02(a). Thus, in reviewing SIP submissions, EPA's role is to approve state choices, provided that they meet the criteria of the CAA. Accordingly, this action merely approves state law as meeting Federal requirements and does not impose additional requirements beyond those imposed by state law. For that reason, this action:

- Is not a ''significant regulatory action'' subject to review by the Office of Management and Budget under Executive Order 12866 (58 FR 51735, October 4, 1993);
- Does not impose an information collection burden under the provisions of the Paperwork Reduction Act (44 U.S.C. 3501 *et seq.*);
- Is certified as not having a significant economic impact on a substantial number of small entities under the Regulatory Flexibility Act (5 U.S.C. 601 *et seq.*);
- Does not contain any unfunded mandate or significantly or uniquely affect small governments, as described in the Unfunded Mandates Reform Act of 1995 (Pub. L. 104–4);
- Does not have Federalism implications as specified in Executive Order 13132 (64 FR 43255, August 10, 1999);
- Is not an economically significant regulatory action based on health or safety risks subject to Executive Order 13045 (62 FR 19885, April 23, 1997);
- Is not a significant regulatory action subject to Executive Order 13211 (66 FR 28355, May 22, 2001);
- Is not subject to requirements of Section 12(d) of the National Technology Transfer and Advancement Act of 1995 (15 U.S.C. 272 note) because application of those requirements would be inconsistent with the CAA; and
- Does not provide EPA with the discretionary authority to address, as appropriate, disproportionate human health or environmental effects, using practicable and legally permissible methods, under Executive Order 12898 (59 FR 7629, February 16, 1994).

In addition, this rule does not have tribal implications as specified by Executive Order 13175 (65 FR 67249, November 9, 2000), because the SIP is not approved to apply in Indian country located in the state, and EPA notes that it will not impose substantial direct costs on tribal governments or preempt tribal law.

B. Submission to Congress and the Comptroller General

The Congressional Review Act, 5 U.S.C. 801 *et seq.,* as added by the Small Business Regulatory Enforcement Fairness Act of 1996, generally provides that before a rule may take effect, the agency promulgating the rule must submit a rule report, which includes a copy of the rule, to each House of the Congress and to the Comptroller General of the United States. Section 804, however, exempts from section 801 the following types of rules: Rules of particular applicability; rules relating to agency management or personnel; and rules of agency organization, procedure, or practice that do not substantially affect the rights or obligations of non-agency parties. 5 U.S.C. 804(3). Because this is a rule of particular applicability, EPA is not required to submit a rule report regarding this action under section 801.

C. Petitions for Judicial Review

Under section 307(b)(1) of the CAA, petitions for judicial review of this action must be filed in the United States Court of Appeals for the appropriate circuit by June 25, 2012. Filing a petition for reconsideration by the Administrator of this final rule does not affect the finality of this action for the purposes of judicial review nor does it extend the time within which a petition for judicial review may be filed, and shall not postpone the effectiveness of such rule or action. Parties with objections to this direct final rule are encouraged to file a comment in response to the parallel notice of proposed rulemaking for this action published in the proposed rules section of today's **Federal Register**, rather than file an immediate petition for judicial review of this direct final rule, so that EPA can withdraw this direct final rule and address the comment in the proposed rulemaking.

This action to remove the Transco Station 175 operating permit from the Virginia SIP may not be challenged later in proceedings to enforce its requirements. (*See* section 307(b)(2).)

List of Subjects in 40 CFR Part 52

Environmental protection, Air pollution control, Incorporation by reference, Nitrogen dioxide, Ozone.

Dated: April 12, 2012.

W.C. Early,

Acting Regional Administrator, Region III.

40 CFR part 52 is amended as follows:

PART 52—[AMENDED]

■ 1. The authority citation for 40 CFR part 52 continues to read as follows:

Authority: 42 U.S.C. 7401 *et seq.*

Subpart VV—Virginia

■ 2. In § 52.2420, the table in paragraph (d) is amended by removing the entry for Transcontinental Pipeline Station 175.

[FR Doc. 2012–9973 Filed 4–25–12; 8:45 am]

BILLING CODE 6560–50–P

ENVIRONMENTAL PROTECTION AGENCY

40 CFR Part 52

[EPA–R08–OAR–2011–0870; FRL–9658–9]

Approval and Promulgation of Implementation Plans; South Dakota; Regional Haze State Implementation Plan

AGENCY: Environmental Protection Agency (EPA).

ACTION: Final rule.

SUMMARY: EPA is taking final action to approve a revision to the South Dakota State Implementation Plan (SIP) addressing regional haze submitted by the State of South Dakota on January 21, 2011, along with an amendment submitted on September 19, 2011. EPA has determined that the plan submitted by South Dakota satisfies the requirements of the Clean Air Act (CAA or Act) and our rules that require states to prevent any future and remedy any existing man-made impairment of visibility in mandatory Class I areas caused by emissions of air pollutants from numerous sources located over a

wide geographic area (also referred to as the ''Regional Haze program'').

DATES: This rule is effective May 29, 2012.

ADDRESSES: EPA has established a docket for this action under Docket ID No. EPA–R08–OAR–2011–0870. All documents in the docket are listed on the *www.regulations.gov* Web site. Although listed in the index, some information is not publicly available, e.g., Confidential Business Information (CBI) or other information whose disclosure is restricted by statute. Certain other material, such as copyrighted material, is not placed on the Internet and will be publicly available only in hard copy form. Publicly available docket materials are available either electronically through *www.regulations.gov,* or in hard copy at the Air Program, Environmental Protection Agency (EPA), Region 8, 1595 Wynkoop Street, Denver, Colorado 80202–1129. EPA requests that if at all possible, you contact the individual listed in the **FOR FURTHER INFORMATION CONTACT** section to view the hard copy of the docket. You may view the hard copy of the docket Monday through Friday, 8 a.m. to 4 p.m., excluding Federal holidays.

FOR FURTHER INFORMATION CONTACT: Gail Fallon, Air Program, Mailcode 8P–AR, Environmental Protection Agency, Region 8, 1595 Wynkoop Street, Denver, Colorado 80202–1129, (303) 312–6281, or *fallon.gail@epa.gov.*

SUPPLEMENTARY INFORMATION:

Definitions

For the purpose of this document, we are giving meaning to certain words or initials as follows:

- The words or initials *Act* or *CAA* mean or refer to the Clean Air Act, unless the context indicates otherwise.
- The initials *BACT* mean or refer to best available control technology.
- The initials *BART* mean or refer to best available retrofit technology.
- The initials *CAMD* mean or refer to EPA's Clean Air Markets Database.
- The initials CO_2 mean or refer to carbon dioxide.
- The initials *DENR* mean or refer to the South Dakota Department of Natural Resources.
- The words *EPA, we, us* or *our* mean or refer to the United States Environmental Protection Agency.
- The initials *FGD* or *scrubber* mean or refer to flue gas desulfurization.
- The initials *FIP* mean or refer to Federal Implementation Plan.
- The initials *FLM* mean or refer to Federal Land Manager.
- The initials *LNB* mean or refer to low NO_X burners.
- The initials NO_X mean or refer to nitrogen oxides.
- The initials *NPCA* mean or refer to the National Parks Conservation Association.
- The initials *NPS* mean or refer to the National Park Service.
- The initials *NAAQS* mean or refer to National Ambient Air Quality Standards.
- The initials *PM* mean or refer to particulate matter.
- The initials $PM_{2.5}$ mean or refer to particulate matter with an aerodynamic diameter of less than 2.5 micrometers or fine particulate matter.
- The initials PM_{10} mean or refer to particulate matter with an aerodynamic diameter of less than 10 micrometers or fine particulate matter.
- The initials *PSD* mean or refer to prevention of significant deterioration.
- The initials *RBLC* mean or refer to the RACT/BACT/LAER Clearinghouse.
- The initials *RP* mean or refer to reasonable progress.
- The initials *RPG* mean or refer to reasonable progress goal.
- The initials *SCR* mean or refer to selective catalytic reduction.
- The initials *SIP* mean or refer to State Implementation Plan.
- The initials *SNCR* mean or refer to selective non-catalytic reduction.
- The initials SO_2 mean or refer to sulfur dioxide.
- The words *South Dakota* and *State* mean the State of South Dakota unless the context indicates otherwise.
- The initials *URP* mean or refer to uniform rate of progress.

Table of Contents

I. Background
II. Issues Raised by Commenters and EPA's Responses
A. General Comments on the Big Stone I BART Determination
B. Comments on the Big Stone I SO_2 BART Determination
C. Comments on the Big Stone I NO_X BART Determination
D. Comments on Big Stone I PM BART Determination
E. Startup, Shutdown and Enforceability Comments
F. Modeling Comments
G. GCC Dacotah Cement Comments
H. General Comments
III. Final Action
IV. Statutory and Executive Order Reviews

I. Background

We signed our notice of proposed rulemaking on November 29, 2011, and it was published in the **Federal Register** on December 8, 2011. In that notice, we proposed approval of the State of South Dakota's Regional Haze SIP for the first implementation period (through 2018). 76 FR 76646. A detailed explanation of the CAA's visibility requirements and the Regional Haze Rule as it applies to South Dakota was provided in the notice of proposed rulemaking and will not be restated here. EPA's rationale for proposing approval of the South Dakota SIP revision was described in detail in the proposal, and is further described in this final rulemaking.

South Dakota has one source, Big Stone I Unit 1 (Big Stone I), which is subject to the best available retrofit technology (BART) requirements.[1] Big Stone I is a coal-fired power plant. The State has identified various BART requirements including emission limits and monitoring, recordkeeping and reporting for Big Stone I. In South Dakota's Administrative Rules, Chapter 74:36:21 notes these requirements apply to a BART-eligible source. Regardless of the generic language, wherever a requirement is identified for a BART-eligible source in Chapter 74:36:21, South Dakota intended for the provisions of the state rule to apply to Big Stone I.

II. Issues Raised by Commenters and EPA's Responses

This action addresses comments on the South Dakota Regional Haze SIP. The publication of EPA's proposed rule on December 8, 2011 initiated a 60-day public comment period that ended on February 6, 2012. During the public comment period we received written comments from the State of South Dakota, CREDO Action, the National Parks Conservation Association (NPCA), the Sierra Club, and the National Park Service (NPS). We have reviewed the comments and provided our responses below. Full copies of the comment letters are available in the docket for this rulemaking.

A. General Comments on the Big Stone I BART Determination

Comment: One commenter stated that South Dakota is not excused from following a reasonable analysis in evaluating BART and setting BART emission limits because Big Stone I has a generating capacity less than 750 MW. South Dakota is still obligated to comply with BART as defined at 40 CFR 51.301 and to include controls with the top level of pollutant removal efficiency in evaluating the ''best system of continuous emission reduction.''

Because South Dakota did not consider the capabilities of various pollution controls in its BART analysis for Big Stone I, its cost impact analysis is skewed in favor of low-cost equipment, and does not evaluate cost

[1] See SIP Section 6 for South Dakota's analysis.

impacts in terms of pollution reduced. The State must consider varying levels of pollution control efficiency in its Big Stone BART analyses.

Response: We agree with the commenter that the Regional Haze Rule requires states to consider the most stringent level of control. However, we disagree with the statements that South Dakota's BART analysis is skewed in favor of low-cost equipment for Big Stone I, and that the analysis does not evaluate cost impacts in terms of pollution reduced. South Dakota did describe the range of control efficiencies possible for the various technically feasible control options in its BART determinations. While we acknowledge that South Dakota did not select the highest control efficiency option in every case (e.g., South Dakota selected semi-dry instead of wet flue gas desulfurization (FGD or ''scrubber'' controls) for SO_2 control), we find the State was reasonable in its selection of controls considering the five statutory factors and did not unreasonably reject any control options based on cost as further explained in our responses to other comments in this action.

B. Comments on the Big Stone I SO_2 BART Determination

Comment: Two commenters stated that the SO_2 emission limit for Big Stone I is too high as a result of the baseline emission rate used in the analysis. The commenters stated that Otter Tail Power Company, the operator of Big Stone, and the State both incorrectly assumed an uncontrolled SO_2 emission rate of 0.86 lb/MMBtu for the Big Stone I BART determination. Otter Tail claimed this rate was the highest 24-hour average rate of SO_2 emitted by Big Stone I during 2001–2003. While the BART Guidelines [2] require use of the highest daily emissions in the visibility modeling analysis, that is not an appropriate starting point for setting a BART emission limit. The Sierra Club believed that this rate should have instead been based on the highest 30-day average uncontrolled SO_2 emission rate, because BART emission limits apply on a 30-day average basis. The Sierra Club recommended a baseline emission rate of 0.70 lb/MMBtu, which is the maximum annual average SO_2 emission rate at Big Stone I over the last ten years, according to EPA's Clean Air Markets Database (CAMD), or at the very least recommends the highest 30-day average uncontrolled SO_2 emission rate.

The NPCA stated that it is unclear where the 0.86 lb/MMBtu baseline originates. The NPCA stated that the highest 30-day rolling period for SO_2 during the baseline period (2001–2003) was 0.82 lbs/MMBtu, and that no monthly value was higher than 0.81 lbs/MMBtu through 2010.

The NPCA also noted that the baseline assumes 85% operations, while the baseline period operations averaged 91%, and averaged 92% from 2003–2010.[3]

Response: The BART Guidelines describe the process for calculating the average cost effectiveness of a control strategy.[4] As part of this calculation, baseline annual emissions must be calculated, and section IV.D.4.c of the BART Guidelines describes the calculation of baseline emissions. The BART Guidelines state,

> ''1. The baseline emissions rate should represent a realistic depiction of anticipated annual emissions for the source. In general, for the existing sources subject to BART, you will estimate the anticipated annual emissions based upon actual emissions from a baseline period.
>
> 2. When you project that future operating parameters (*e.g.,* limited hours of operation materials or product mix or type) will differ from past practice, and if this projection has a deciding effect in the BART determination, then you must make these parameters or assumptions into enforceable limitations. In the absence of enforceable limitations, you calculate baseline emissions based upon continuation of past practice.'' [5]

States have some flexibility in determining baseline emissions but should develop a ''realistic depiction of anticipated annual emissions.'' While the use of the highest 24-hour emission rate to estimate annual emissions would not likely result in a realistic estimate of annual emissions, had the State relied on the highest 30-day rolling average value, it is unlikely that it would have arrived at a different conclusion regarding BART. First, the baseline emissions that the State relied on in its calculation of average cost result in lower estimates of average cost than would have resulted from using the approach suggest by the commenter. In addition, the primary basis for the State's BART determination was the visibility benefits that were based on the 24-hour maximum emissions rates. Moreover, BART emission limits, which apply at all times, including during startup and shutdown must allow an adequate margin for compliance.

In addition, the State assumed baseline emissions of 18,000 tons per year for its BART analysis. By contrast, emissions data in CAMD shows that the emissions between 2001 and 2003 were 12,540 tons per year. Therefore, we find the State did not underestimate the baseline emissions in its BART analysis.

Based on our review of all the information, we find that South Dakota acted reasonably in establishing the SO_2 BART emission limit for Big Stone.

Comment: One commenter stated that the South Dakota Department of Environment and Natural Resources (DENR) incorrectly assumed 95% SO_2 control efficiency for wet FGD, which can actually achieve as high as 99% control efficiency. The commenter gave several examples of wet scrubbers that have achieved up to 99% removal efficiency, and included cost estimates for certain technologies to argue that the costs for some of these systems ''are well within the range EPA normally considers cost effective'' in best available control technology (BACT) analyses. In its evaluation of a wet scrubber for BART, the Big Stone I BART Analysis should have evaluated these levels of control.

The commenter also stated that the State incorrectly assumed 90% SO_2 control with a dry scrubber at Big Stone I, and therefore, proposed an emission limit of 0.09 lb/MMBtu which was too high. Using the Sierra Club's previously proposed baseline emission rate of 0.70 lb/MMBtu, the BART emission limit with a 90% efficient dry scrubber should be 0.07 lb/MMBtu at most. Additionally, other facilities are currently subject to higher removal efficiency requirements (up to 95%) with dry scrubbers, and corresponding lower SO_2 BACT limits than the 0.09 lb/MMBtu proposed by the State. Another commenter stated that more accurate reflections of the maximum capabilities of wet and dry scrubbers would cut remaining emissions significantly (75% and 50%, respectively), and requests that EPA adjust the final emission limits appropriately. This commenter also quoted the BART Guidelines; ''the list [of available technologies] is complete if it includes the maximum level of control each technology is capable of achieving.''

Response: We agree that, in some cases, wet and dry scrubbers can achieve greater emission reductions than those assumed by South Dakota. However, when the sulfur content of the coal is low, a lower control efficiency is anticipated. Due to the very low sulfur content of the coal burned at Big Stone I, on average 0.57%, it is unlikely that the high control efficiencies cited by the

[2] 40 CFR part 51, appendix Y.

[3] The commenter cited EPA's CAMD for hours of operation at Big Stone I.

[4] 40 CFR part 51, appendix Y, section IV.D.4.c.

[5] 40 CFR part 51, appendix Y, section IV.D.4.d.

commenter could be achieved.[6] South Dakota also provided explanatory information in its response to comments in Appendix E of the SIP that it considered SO_2 inlet concentrations in its estimation of possible control efficiencies. In addition, BART emission limits, which apply at all times, including during startup and shutdown must allow an adequate margin for compliance.

Therefore, with regard to the proposed emission limits for dry scrubbers at Big Stone I, we find that South Dakota's limit of 0.09 lb/MMBtu is reasonable for dry scrubbers at the facility, and we are approving it.

Comment: One commenter stated that the choice of semi-dry FGD over wet FGD was largely based on modeling results about which EPA noted; ''It is not clear why the model predicted this result; it may relate to stack parameters.'' 76 FR 76656. The commenter stated that EPA should not rely on ''unreliable, unexplained, or not logical'' modeling results.

Response: We disagree that the model results, upon which the State and EPA relied for this action, are ''unreliable, unexplained, or not logical.'' The CALPUFF modeling protocol used for the South Dakota Regional Haze SIP conforms to the BART Guidelines, and we received no information to the contrary aside from the general comment directly above. We also note that the stack parameters used in the model differ for the two options. Wet FGD results in a cooler plume with less velocity and thermal buoyancy than dry FGD. This is likely to have affected the model predictions.

Comment: One commenter stated that South Dakota's cost effectiveness calculation of a wet scrubber, $1,699/ton at an SO_2 emission rate of 0.043 lb/MMBtu, is reasonable when compared to other BART determinations at similar facilities.[7] South Dakota, therefore, lacks justification to discount installation of a wet scrubber based on costs.

Response: Neither EPA nor South Dakota discounted the installation of a wet scrubber based on costs. As stated in the proposal, ''the State deemed the average cost effectiveness reasonable for the two remaining control options, semi-dry and wet FGD.'' 76 FR 76656.

Comment: One commenter noted Otter Tail's BART submittal based its costs on the CUE Cost model rather than EPA's Control Cost Manual, which contradicts the BART Guidelines and makes comparison with other cost effectiveness values difficult.

Response: As we commented to South Dakota previously,[8] while we are satisfied with the BART conclusions, in general we do not recommend relying on the CUE Cost model. We agree with the commenter that according to the BART Guidelines, in order to maintain and improve consistency, cost estimates should be based on the Control Cost Manual. Since South Dakota determined all control options in its BART analysis were cost effective, and it relied primarily on visibility benefits in its final BART determinations, the use of the CUE Cost model did not affect the final result.

Comment: One commenter stated that DENR and Otter Tail failed to adequately evaluate the environmental benefits of a wet scrubber as opposed to a dry scrubber. First, because wet scrubbers are much more efficient at controlling SO_2, they will be needed to work in conjunction with likely ''mandated'' future carbon dioxide (CO_2) emission controls, which require SO_2 removal efficiency at 98–99%. Second, wet scrubbers are much more effective than dry scrubbers at controlling emissions of hydrogen chloride and hydrogen fluoride, and ''provide significant removal of arsenic, beryllium, cadmium, chromium, lead, manganese, and mercury from flue gas.'' [9] Third, decreases in SO_2 emissions translate to lower $PM_{2.5}$ concentrations because of the decrease in sulfate formation. Decrease in sulfate can also prevent damage to certain water bodies and wetlands. Another commenter also stated that EPA did not adequately take into account the additional environmental benefits from use of a wet scrubber and the low energy use associated with some newer models, and asks EPA to revisit this aspect of the technology section.

Response: We took into account the State's consideration of environmental impacts when reviewing the Big Stone I SO_2 BART determination, as required by the BART Guidelines and evidenced in our proposal. 76 FR 76656. The CAA requires consideration of energy and non-air quality environmental impacts; the commenter's concerns relate primarily to air quality issues. The State did identify non-air quality environmental impacts in Section 6 of the SIP. South Dakota noted that the dry scrubber would be installed upstream of the existing baghouse, resulting in some negligible additional material being collected in the baghouse. In addition, the energy issue raised by the commenter related to wet versus dry scrubbing is addressed in the SIP in Table 6–8 where the State notes that the wet scrubber control option uses more energy than the dry scrubber option, 9,500 kW versus 3,325 kW. We also note that Sierra Club's suggestion of future mandates for CO_2 emission controls is speculative and that it is premature for us to consider in this action. Accordingly, our consideration of environmental impacts was sufficient.

C. Comments on the Big Stone I NO_X BART Determination

Comment: One commenter stated that it is unclear where the baseline rate of 0.86 lbs/MMBtu for NO_X originated, because the thirty-day rolling values for NO_X only reached 0.85 lbs/MMBtu during the baseline period. The commenter noted that the thirty-day rolling values for NO_X have been at or below 0.71 lbs/MMBtu since 2007 because of the installation of overfire air. The commenter asserted that 0.71 lbs/MMBtu should therefore be the starting point for additional NO_X reductions from SCR. The commenter also noted that the baseline assumes 85% operations, while the baseline period operations averaged 91%, and averaged 92% from 2003–2010.[10]

Response: See our previous response in this action related to the SO_2 emission rate as it relates to baseline emissions. Regarding the commenter's concern related to the hours of operation assumed in the baseline, we note that the State's approach considerably overestimates the baseline emissions. The State assumed baseline emissions of 18,000 tons per year for its BART analysis. By contrast, emissions data in CAMD shows that the emissions between 2001 and 2003 were 15,780 tons per year. Therefore, we find the State did not underestimate the baseline emissions in its BART analysis.

Comment: One commenter stated that the NO_X BART analysis at Big Stone I is flawed because it fails to consider the level of control available with SCR, resulting in an inflated NO_X emission limit. DENR's proposed NO_X emission rate of 0.10 lb/MMBtu reflects 85.9% NO_X control with the installation of SCR based on emission data showing that the highest monthly emission rate of NO_X in 2009 was 0.71 lb/MMBtu. SCR systems can achieve 90% + NO_X reductions,

[6] Cost and Quality of Fuels for Electric Utility Plants, 1999 Tables, DOE/EIA–091(99), June 2000, Table 21.

[7] Commenter referenced an NPS spreadsheet with cost information on BART determinations.

[8] March 12, 2010 letter from EPA Region 8, Callie Videtich to DENR, Brian Gustafson, re: EPA Region 8 Comments on January 15, 2010 Draft Regional Haze SIP (FLM Consultation Version).

[9] Commenter cited *http://www.icac.com/i4a/pages/index.cfm?pageid=3401* for quote.

[10] Commenter cited EPA's CAMD for hours of operation at Big Stone I.

meaning an emission limit of .071 lb/MMBtu is more reflective of SCR capabilities. The commenter also cited recent SCR retrofits which have resulted in emission rates lower than 0.05 lb/MMBtu being achieved.

Response: Because the control efficiency of SCR is dependent on the NO_X inlet concentration, it is more appropriate to assess the control effectiveness of SCR relative to the performance rate. Although we acknowledge that other SCR retrofits have resulted in lower NO_X emission levels than 0.10 lb/MMBtu, we find that South Dakota's limit is reasonable using SCR plus separated overfire air at Big Stone I. This is particularly true in light of the need to establish an adequate margin of compliance for BART limits that must apply at all times including startup and shutdown.

D. Comments on Big Stone I PM BART Determination

Comment: One commenter stated that DENR's proposed particulate matter (PM) BART emission limit of 0.012 lb/MMBtu is not reflective of the limits achievable by fabric filter baghouses, and is inconsistent with some lower PM limits required as BACT. The commenter cited a permit for a plant in Atlanta, Plant Washington, with a PM limit of 0.010 lb/MMBtu to argue that Big Stone's PM emission limit should be no higher than this level.

Response: As noted in the proposal, the 0.012 lb/MMBtu PM emission limit ''represents a stringent level of control that is consistent with recent Best Available Control Technology determinations for PSD [prevention of significant deterioration] permits.'' 76 FR 76659. Also, performance test data for the baghouse indicates that the actual emission rate is 0.011 lb/MMBtu. Therefore, we find the emission limit set by South Dakota is commensurate with the actual performance of the control device. Moreover, there is no indication that a more stringent level of control would lead to meaningful visibility benefits.

Comment: One commenter asserted that DENR should require a PM continuous emission monitoring system (CEMS) rather than the currently proposed annual stack test to ensure continuous compliance with BART limits. If not CEMS, commenter alternatively requested that DENR impose a 10% opacity limit ''reflective of BART,'' noting that this would ensure continuous compliance with the BART limit and that Big Stone already has continuous opacity monitoring. Commenter noted that other coal plants' permits include opacity limits of 10% or less.

Response: PM CEMS provides the most robust means of demonstrating continuous compliance with the PM emission limits. However, we disagree that their use is required in this case. We find that the monitoring requirements in the South Dakota Regional Haze SIP are adequate to demonstrate continuous compliance with the PM emission limits. South Dakota noted in response to similar comments it received during its public comment period that the State has the authority to require CEMS as well as a 10% opacity limit, but that based on its case-by-case analysis of the facility it believed an annual stack test was adequate to meet the regional haze requirements. We agree with the State.

Comment: One commenter stated that the PM BART limit at Big Stone should be required now because the baghouse has already been installed.

Response: Normally, we would agree that the PM BART limit should apply as expeditiously as practical. In this case, South Dakota noted in its response to a similar comment in Appendix E of the SIP that since a dry FGD system must be located upstream of the particulate control device, that demonstrating compliance with the SO_2 BART limit affects the compliance demonstration for PM. The commenter does not provide any explanation to refute South Dakota's response. We find South Dakota's compliance timeframe is reasonable as noted in Section 6.4 of the SIP for installation and operation of BART as expeditiously as practical, but no later than five years from EPA's approval of the South Dakota Regional Haze Program.

E. Startup, Shutdown and Enforceability Comments

Comment: One commenter stated that DENR should not exempt Big Stone from BART emission limits during startup and shutdown. First, BART emission limits must be met on a continuous basis pursuant to CAA section 302(k). Second, startup and shutdown are part of normal operations at facilities like Big Stone, and because these emissions impact visibility and regional haze, ''DENR's proposed BART limits must include periods of startup and shutdown.'' Third, permitting authorities have required as stringent and more stringent BACT limits at coal-fired boilers without allowing exemptions for startup and shutdown. Further, the commenter stated that Otter Tail did not request exemptions from emission limits for startup and shutdown related to a new facility, Big Stone II, for which it was seeking a permit during a 2008 contested case hearing.

Response: As stated in the proposal, all the BART limits (based on lb/MMBtu, 30-day rolling average) specified in the South Dakota Regional Haze SIP apply at all times, including periods of startup, shutdown and malfunction. The lb/MMBtu limits are more restrictive than the lb/hr limits that are also specified in the SIP, and therefore, as a practical matter, the lb/MMBtu limits take precedence.

Comment: One commenter stated that DENR's proposed regulation to make the BART requirements from the Regional Haze SIP enforceable (74:36:21:06–09) fails to specify that Big Stone is subject to the regulation's emission limits. The regulation must specify the source that is subject to the BART emission limits to ensure that those limits are enforceable.

Response: We disagree. Though somewhat unique in its omission of the facility name, we find that the State's regulation provides adequate detail to ensure its applicability and enforceability related to Big Stone I. We are deferring to the State's constitution and legislative process that favors general laws over special, unit-specific laws. We are basing our approval of South Dakota's Regional Haze SIP on the conclusion that the regulation does cover Big Stone I.

F. Modeling Comments

Comment: One commenter stated that both the cumulative visibility impact of a source's emissions and the cumulative benefit of emission reductions are necessary considerations as part of the fifth step in a BART analysis. The commenter stated that this is particularly important for sources in South Dakota because emissions from these sources cause or contribute to visibility impairment at multiple Class I areas. The commenter supported an argument from an NPS comment letter which states:

> ''It simply does not make sense to use the same metric to evaluate the effects of reducing emissions from a BART source that impacts only the one Class I area as for a BART source that impacts multiple Class I areas.'' [11]

The commenter provided examples of instances in which consideration of cumulative visibility benefits influenced BART decisions, one being EPA Region 6's FIP for the San Juan Generating Station in New Mexico. The commenter

[11] NPS comments on Salt River Project's proposed determination for Navajo Generating Station, July 24, 2009, according to commenter.

also stated that FLMs rely on cumulative assessments of visibility impacts and benefits to determine the levels of emission controls that are cost-effective and technically feasible. Additionally, the commenter stated that cumulative impact assessments also provide more accurate depictions of costs on a dollars per deciview basis, which is a useful supplement to the $/ton calculation used in BART determinations.

Response: The BART Guidelines list the dollars per deciview ratio as an additional cost effectiveness metric that can be employed along with $/ton for use in a BART evaluation. However, EPA does not have guidelines on how the dollars per deciview metric is to be used. South Dakota did include a dollars per deciview metric across multiple Class I areas in its evaluation of BART controls based on the combinations of controls for which Otter Tail conducted visibility modeling.[12] The dollars per deciview analysis indicated the control options that reduced visibility impacts to acceptable levels had comparable dollars per deciview results, within approximately 10 percent of each other.

While we agree with the commenter that the cumulative visibility impact across multiple Class I areas is a useful metric that can further inform the BART determination, states can choose how they compile this information. We find that South Dakota's evaluation of visibility impacts is consistent with the BART guidelines and a sufficient basis for choosing control options.

G. GCC Dacotah Cement Comments

Comment: Several commenters stated that technical feasibility was not the basis for South Dakota's decision to eliminate SNCR in its 2003 NO_X BACT determination for GCC Dacotah Kiln #6. Commenters pointed to the ''Statement of Basis'' in support of GCC Dacotah's 2003 PSD permit, in which DENR considered SNCR to be technically feasible for Kiln #6, but rejected SNCR as BACT due to concerns about accidental release of ammonia and ammonia slip. The NPS provided excerpts from its comments on the 2003 PSD permit in support of the NPS's comments on this action.

Response: We are not basing our final approval of South Dakota's regional haze SIP with regard to GCC Dacotah Kiln #6 on the basis of any general statements about technical feasibility of SNCR. We are basing it in part on analysis and information from South Dakota's 2003 BACT determination, which South Dakota relied on in regard to Kiln #6, and information subsequently provided by South Dakota. In order to clarify the situation and to respond to other comments on Kiln #6, we provide additional detail on the 2003 PSD permit. We explain in response to other comments our assessment of South Dakota's reliance on the 2003 BACT determination for Kiln #6.

On June 23, 1994, Dacotah Cement (the previous owner and operator of the facility) submitted an application to South Dakota DENR for a modification to Kiln #6.[13] Based on information in the application, South Dakota agreed that the modification was not major under the PSD program, and the modification was completed. However, South Dakota later determined that, based on the result of subsequent stack tests, the modification should have triggered PSD review. South Dakota entered into a settlement agreement with Dacotah Cement. GCC Dacotah purchased the facility and submitted applications for PSD permits for PM, NO_X, and carbon monoxide.

In its permit application, GCC Dacotah presented a five-step BACT analysis for NO_X controls for Kiln #6. In the first step, GCC Dacotah presented SNCR as an available technology, and, in the second step, did not eliminate SNCR (standing alone) as technically infeasible. Among other control options, the company also presented staged combustion, in the form of an inline, low-NO_X calciner with riser duct firing, and low NO_X burners (LNBs) with indirect firing, as available and feasible. However, in considering combinations of control technologies, GCC Dacotah stated that SNCR was technically infeasible in combination with the proposed staged combustion system, for reasons including requirements for an injection location with temperatures between 1600 °F and 2000 °F. The company stated that, due to these reasons, use of SNCR with the proposed staged combustion system would have a high probability of ammonia slip and resulting detached plume.

In its statement of basis for the draft permit, South Dakota likewise presented SNCR, standing alone, as an available and technically feasible option for Kiln #6. However, South Dakota stated that accidental release of ammonia during handling and storage was an environmental risk. South Dakota also stated that ammonia slip could result in increased PM_{10} and $PM_{2.5}$ emissions, South Dakota viewed this as a concern in Rapid City. Based on these reasons, South Dakota stated ''SNCR is not considered an appropriate control device for [NO_X] in Rapid City.'' [14]

In the statement of basis for the draft permit, South Dakota also considered staged combustion as an option. GCC Dacotah proposed a staged combustion system with a small pre-calciner, with a cost-effectiveness of $3,888 per ton of NO_X removed. GCC Dacotah initially did not provide costs for a large pre-calciner. South Dakota agreed with the cost-effectiveness for the small pre-calciner. South Dakota also stated that the large pre-calciner would not be economically or physically feasible, as the existing support structure and equipment location would not accommodate it. Based on review of the RACT/BACT/LAER Clearinghouse (RBLC), South Dakota proposed as BACT the controls presented by GCC Dacotah, including the staged combustion system with the small pre-calciner.

As noted by the NPS in its comments on this action, the NPS provided comments on the draft PSD permit, including the rejection of SNCR for Kiln #6. The NPS argued that South Dakota should reconsider its decision to eliminate SNCR, in light of the requirement for SNCR in a permit for a cement kiln at Continental Cement in Missouri. The NPS also argued that the cost-effectiveness of a large pre-calciner should be assessed in order to determine whether it might be BACT.

In response to the NPS comments, South Dakota reiterated its concerns with accidental release of ammonia and ammonia slip. In addition, South Dakota noted that the permit for the Continental Cement kiln required the replacement of an existing kiln, thereby reducing NO_X and avoiding PSD review. South Dakota also noted that the NO_X emissions limit of 8 lbs/ton of clinker for the Continental Cement kiln was higher than the emissions limit for GCC Dacotah Kiln #6 established in the PSD permit. Finally, based on a cost analysis South Dakota requested from GCC Dacotah, South Dakota stated that the cost-effectiveness of the large pre-calciner would be $5,100 per ton of NO_X removed, which South Dakota considered excessive. South Dakota, therefore, finalized its determination that staged combustion with the small pre-calciner was BACT for Kiln #6.

On October 11, 2011, South Dakota provided the email included in the docket in response to our questions

[12] See SIP Table 6–15.

[13] South Dakota DENR, Statement of Basis, PSD Preconstruction Permit (''2003 PSD Permit SOB''), p. 1 (Apr. 10, 2003). The 2003 permit files are available in the docket for this action.

[14] Id., pp. 23–24.

regarding the 2003 BACT determination and why SNCR was eliminated. The email stated that, in 2003, South Dakota determined that SNCR was not technically feasible for use with the controls (including the small pre-calciner) selected as BACT for Kiln #6. (The email did not state that SNCR standing alone had been considered technically infeasible.) South Dakota explained that it had determined that the small pre-calciner lacked an appropriate location for use of SNCR, and that use of it in the small pre-calciner would cause ammonia slip. South Dakota stated that the large pre-calciner ''may'' have had an appropriate location for use of SNCR; the State also noted, however, that the large pre-calciner had been considered to have excessive costs.

We reiterate that we are basing our final action on information and analyses in the 2003 BACT determination, together with emissions data provided by South Dakota and South Dakota's statements that, at this facility, site-specific considerations prevent the effective use of SNCR in Kiln #6 without significant process modifications. We are not basing our final action on any general statement on technical feasibility of SNCR. We provide this response in order to clarify the record.

Comment: The NPS disagreed with ''EPA's and DENR's reliance on a 2003 * * * PSD permit review for Dacotah Cement Kiln #6 to determine that post-combustion controls were not technically feasible.'' First, the NPS stated that it is inconsistent for DENR, in analyzing the Pete Lien and Sons lime plant, to review the RBLC to determine whether more stringent post-combustion controls had been permitted since a 2008 PSD decision on that facility, and not review more recent permit requirements after the 2003 PSD decision for Kiln #6. Second, the two commenters questioned EPA's statement that the 2003 BACT determination for Dacotah's PSD permit is ''recent.'' Finally, the NPS cited EPA's BART Guidelines which state ''all technologies should be considered if available before the close of the State's public comment period.'' The NPS stated, and provided documentation in support of its statement, that SNCR application to preheater/precalciner kilns such as Dacotah's Kiln #6 has evolved from ''questionable'' to ''well established'' from the 2003 BACT determination and the close of the State's first Regional Haze SIP public comment period in 2010.

Response: As discussed elsewhere, we are not basing our final action on whether SNCR is available or technically feasible for Kiln #6. We are basing our final action on information and analyses in the 2003 BACT determination, together with South Dakota's statements that, at this facility, site-specific considerations prevent the effective use of SNCR in Kiln #6 without significant process modifications. These site-specific considerations have not changed since 2003, and subsequent developments regarding applicability of SNCR to other preheater/precalciner kilns also do not change this.

With regard to South Dakota's four-factor review of Pete Lien and Sons, it appears that the State's review of the RBLC was not the sole basis for the State's decision. The State also modeled baseline visibility impacts of the facility (as it did for GCC Dacotah Kilns #4 and #5 and Ben French). The modeling showed impacts from 0.05 to 0.07 deciviews at Badlands and Wind Cave National Parks. In any case, under the BART guidelines (if used for reasonable progress (RP) determinations), review of the RBLC would be recommended to identify available technologies. As discussed above, in the 2003 PSD permit, the State treated SNCR, standing alone, as available and technically feasible for GCC Dacotah Kiln #6, and did not eliminate SNCR as unavailable based on its review of the RBLC at that time. A present-day review of the RBLC would not change this. Thus, South Dakota's use of the RBLC in analyzing the Pete Lien and Sons facility does not give any basis for us to change our proposed approval. Similarly, because South Dakota treated SNCR as available in the 2003 BACT determination, the comments relating to the BART guidelines on determining availability and to subsequent application of SNCR to preheater/precalciner kilns do not give us any basis to change our proposed approval.

Comment: Two commenters disagreed with the statement in EPA's proposed action that ''In issuing the PSD permit in 2003 * * * South Dakota found that SNCR was not technically feasible for Kiln 6.'' Further, these commenters stated that the concerns about ammonia slip are predictable and solvable in this context, and that there is no reason to believe that the accidental release of ammonia slip would be any more of a problem at GCC Dacotah than at the numerous other facilities cited by the commenter successfully using ammonia in the operation of SNCR and SCR. Ammonia slip is typically managed by system design and operating parameters, and it likely should have been applied in the 2003 BACT determination, and there is no reason to delay analysis of SNCR and other feasible technologies until 2018. One commenter stated that the failure to require adequate emission controls lacks legal justification.

Response: We disagree with the comments to the extent that they conclude that we must disapprove the South Dakota Regional Haze SIP with respect to GCC Dacotah Kiln #6. As detailed above, in its 2002 PSD permit application, GCC Dacotah presented SNCR both as a stand-alone control option and in combination with the staged combustion system, including the small pre-calciner. While the State's basis for rejecting SNCR, standing alone, in 2003 may have been solely concerns with accidental release of ammonia and ammonia slip, the information and analyses in the 2003 BACT determination with regard to SNCR in combination with the staged combustion system provide a sufficient basis, viewed today, so that we are not prepared to find that South Dakota was unreasonable in relying on the 2003 BACT determination when considering Kiln #6. In evaluating SNCR now, it must be considered as applied to the existing design, i.e., a staged combustion system, including the small pre-calciner.

As represented by South Dakota in its October 11, 2011 email, at this facility site-specific considerations prevent the effective use of SNCR in Kiln #6 without significant process modifications.[15] Among the considerations presented by the State is a requirement for a location with temperatures from 1600 ° to 2000 °.[16] South Dakota states that the existing design, including the staged combustion system with the small pre-calciner, does not provide an adequate location for use of SNCR. South Dakota also states that the same system, but with a large pre-calciner, ''may have had an appropriate location.'' The State notes (as we have mentioned above) that a staged combustion system with a large pre-calciner was rejected in 2003 as BACT due to excessive costs.

Based on the above statements regarding appropriate locations for SNCR, emissions data provided by DENR, and the limited information and analyses in the 2003 BACT determination, we note the following.[17]

[15] We note that these considerations were also presented in the 2002 GCC Dacotah PSD permit application, in the portion discussing SNCR in combination with the staged combustion system, including the small pre-calciner.

[16] See also US EPA, Alternative Control Techniques Document Update –NO_X Emissions from New Cement Kilns, EPA–453/R–07–006, Fig. 8–1 (Nov. 2007). Note that, based on this figure, at 1400 °F, NO_X reduction efficiency is at most 10%.

[17] The details of these calculations are provided in a memorandum in the docket.

First, based on the emissions data provided by South Dakota, the existing controls, including the staged combustion system with the small pre-calciner, achieve approximately 44% reduction of NO_X emissions. Second, based on GCC Dacotah's estimated costs in 2003 for a large pre-calciner, the cost-effectiveness of replacing the small pre-calciner with a large pre-calciner alone would be (in 2011 dollars) $6,164 per ton of NO_X removed, not including the costs of removing the small pre-calciner and associated equipment. Based on the emissions data, the incremental cost-effectiveness, as compared with the existing controls, would be (in 2011 dollars) $280,246 per ton of NO_X removed. Third, based on the above statements by South Dakota regarding appropriate locations for SNCR, the cost effectiveness of replacing the existing small pre-calciner with a large pre-calciner and installing SNCR would be (in 2011 dollars) $4,348 per ton of NO_X removed, again not including the costs of removing the small pre-calciner and associated equipment. Again, based on the emissions data, the incremental cost-effectiveness, as compared with the existing controls, would be (in 2011 dollars) $20,160 per ton of NO_X removed. The cost estimates for SNCR are conservative, as we use a control efficiency of 50%. Given these costs, we are not prepared to find that South Dakota was unreasonable in relying on the 2003 BACT determination and not requiring additional NO_X controls for Kiln #6.

On the comment that a failure to require adequate emission controls lacks legal justification, other than issues we have responded to elsewhere, the commenter did not provide sufficient detail of any deficiency in our action.

Comment: The NPS stated that SNCR is a feasible option for cement kilns. The NPS cited the BART Guidelines explanations of ''available'' and ''applicable'' technology, a report by the Portland Cement Association, as well as other EPA documents to argue that SNCR has become routinely applied to preheater/precalciner cement kilns since South Dakota's 2003 BACT determination. The NPS also stated that it found three entries for Portland cement plants in the RBLC, all of which were preheater/precalciners and all of which included SNCR to reduce NO_X to approximately half the rate allowed by DENR.

Response: As discussed above, at the time of the 2003 BACT determination, South Dakota considered SNCR as an available and feasible technology for GCC Dacotah Kiln #6. However, given the current configuration of Kiln #6, South Dakota's position (as discussed above) is that site-specific considerations prevent the effective use of SNCR in Kiln #6 without significant process modifications. The citation to the RBLC and the other documents does not convince us that SNCR is routinely applied to existing preheater/precalciner kilns, regardless of site-specific consideration such as the current design. Thus, the comments do not give us any basis to find that the State was unreasonable in relying on the 2003 BACT determination for Kiln #6.

Comment: In reference to EPA's proposed action, which states ''South Dakota declined to conduct a four-factor analysis for GCC Dacotah Kiln 6,'' The NPS asserted that a state cannot simply decline without good reason and an explanation for the public record. The NPS stated that DENR's email to EPA Region 8 does not satisfy the BART Guidelines, which state, ''if you disagree with public comments asserting that the technology is available, you should provide an explanation for the public record as to the basis for your conclusion.'' The NPS does not believe this portion of the BART Guidelines is satisfied ''because it was not made part of DENR's public record and appears to simply be a re-statement of DENR's outdated 2003 BACT determination.''

Response: We disagree. We noted in our proposal that the State relied on the 2003 BACT determination instead of conducting a four-factor analysis for Kiln #6. We discuss the State's response to comments on SNCR for Kiln #6 elsewhere.

There are two critical principles expressed in our BART guidelines that are equally relevant to an RP determination. First, as part of a BART analysis, technically infeasible control options are eliminated from further review. For BART, EPA's criteria for determining whether a control option is technically infeasible are substantially the same as the criteria used for determining technical infeasibility in the BACT context. 70 FR 39165; EPA's ''New Source Review Workshop Manual,'' pages B.17–B.22. Second, states may often be able to rely on a recent BACT determination for a source for purposes of determining BART for that source, unless new technologies have become available or best control levels for recent retrofits have become more stringent. As a general rule, the selection of a recent BACT level as BART is the equivalent of selecting the most stringent level of control, and consideration of the five statutory BART factors becomes unnecessary. Given the overlap of the four statutory RP factors with the five statutory BART factors, we think the same principle applies to RP determinations.

Furthermore, as discussed in more detail elsewhere, in this case it is not just the selection of BACT in the 2003 PSD permit proceeding that the State relies on, it is specific information from that BACT determination that is relevant to application of SNCR to Kiln #6 as it exists now. Independently of the selection of BACT in 2003, that information (as explained elsewhere) and South Dakota's statements regarding site-specific considerations sufficiently explain the State's action so that EPA is not prepared to determine that South Dakota was unreasonable.

Comment: The NPCA stated that SNCR ''likely should have'' been determined to be BACT in the 2003 PSD permit proceeding.

Response: The NPCA does not identify any flaw in the 2003 BACT determination, and none in particular in the information and analyses in that determination on which we rely. Thus, the comment does not give us any basis to change our proposed action.

Comment: The NPCA stated that, should the proposed rate of progress continue, South Dakota's reasonable progress goals (RPGs) for natural visibility at Wind Cave and Badlands national parks are, respectively, 172 years and 201 years after the target date of 2064. The NPCA stated that the uniform rate of progress (URP) will ''egregiously'' not be met, and that the State must therefore analyze and require RP for BART and non-BART sources alike based on the statutory factors. EPA is also required to evaluate the State's RPGs based on the four statutory factors.[18] The NPS cited EPA Region 8's proposed rulemaking for North Dakota's Regional Haze SIP to reiterate that South Dakota must demonstrate why its RPGs and rejection of RP controls are reasonable.[19] The NPCA, therefore, stated that South Dakota and EPA erroneously declined to analyze and require controls for GCC Dacotah, which qualifies as ''any potentially affected source'' and ''contributes significantly to visibility impairment at its Class I areas.''[20]

Response: With respect to BART sources, generally a source-specific BART determination is equivalent to a

[18] 40 CFR 51.308(d)(1)(iii).

[19] 76 FR 183. ''Because the reasonable progress goals fall short of the uniform rate of progress, North Dakota must demonstrate that its reasonable progress goals and rejection of reasonable progress controls is reasonable, based on the four factors. 40 CFR 51.308(d)(1)(ii).''

[20] Commenter's repeated claim that visibility impacts from Kiln #6 are ''significant'' appears to have been extrapolated by a comparison of the combined impacts from Kilns #4 and #5.

source-specific RP determination. As we are approving South Dakota's BART determination for Big Stone, RP requirements for that source are satisfied. With respect to the RP sources, and GCC Dacotah Kilns #4 and #5 in particular, we find South Dakota's RP determinations reasonable. We also explain above the specific information and analyses in the 2003 BACT determination for Kiln #6 that sufficiently support South Dakota's action so we are not prepared to find it unreasonable. The commenters did not identify any deficiencies in South Dakota's RP determinations for other potentially affected sources, or (aside from comments specifically on GCC Dacotah) in the reasons given in our proposal for why South Dakota's RPGs were reasonable. The comments therefore give no basis for us to change our proposed action.

Comment: The NPS stated that, if Q/D [21] were calculated for GCC Dacotah's Kiln #6, its value of 48 would be double that of the next highest evaluated source (Ben French power plant), and more than double the combined value of GCC Dacotah's Kilns #4 and 5. The NPS therefore believed that Kiln #6 is the most significant of the sources that should have been evaluated under the RP provisions of the Regional Haze Rule.

Response: For reasons explained elsewhere, we are not prepared to find that South Dakota was unreasonable in relying on the 2003 BACT determination to meet the requirements of the Regional Haze rule with respect to GCC Dacotah Kiln #6. This is true regardless of the value of Q/D for Kiln #6 alone.

Comment: The NPS stated that it is incorrect for EPA to conclude that the visibility benefits from GCC Dacotah would be small. Because Kiln #6 wasn't modeled, the NPS noted it is inappropriate to conclude that the modeled benefits are small because the analysis of those benefits (including specifically the benefits of adding SNCR to Kiln #6) is incomplete. The NPS further stated that it is reasonable to conclude that, if emissions from Kiln #6 were modeled, they might show that Kiln #6 is a significant contributor to visibility impairment. For this reason, the commenter stated that EPA is incorrect in stating that South Dakota based its determination for Kiln #6 on visibility benefits rather than on a four factor analysis.

Response: We agree that the State did not provide visibility modeling, either of baseline impacts or of benefits, for Kiln #6, and did not base its decision regarding Kiln #6 on visibility modeling. In assessing South Dakota's submittal, we did note that South Dakota modeled baseline impacts for Kilns #4 and #5 combined and relied on that data, and, in contrast, for Kiln #6 we noted instead that South Dakota relied on the 2003 BACT determination. (See 76 FR 76665.) For the reasons discussed elsewhere, we are not prepared to find that reliance unreasonable.

Comment: The NPS stated that, in this action, EPA is considering any cost excessive because of its assumption that visibility benefits would be minimal. The NPS contrasted this action with EPA statements from other actions regarding cost effectiveness. The NPS stated that if EPA bases its decision that lack of visibility benefits trumps a four-factor analysis for a situation in which URP is far from being met, it should ''conduct a valid modeling analysis to estimate the actual benefits on which it is basing its decision.'' The NPS stated that this analysis should be related to the $18 million per deciview average for NO_X control costs, which the NPS stated has become the ''national norm.'' The NPS referred to Colorado's Holcim Cement plant, a potentially affected source for which Colorado is requiring SNCR for RP. The NPS argued that GCC Dacotah Cement's total visibility impact would have been similar or greater than that of Holcim Cement in Colorado, had Kiln #6 been included in GCC Dacotah's modeling. The NPS argued that GCC Dacotah Cement should not be given a competitive advantage over other cement facilities that are also subject to the Regional Haze program requirements.

Response: As a general matter, the Regional Haze rule does not impose uniform numeric standards, such as specific cost effectiveness or visibility benefit levels, that a State is required to use in determining whether a control should be imposed at a potentially affected source for RP. Instead, consistent with the CAA, the rule requires the State to consider certain factors in determining RP. If the State's selected controls do not achieve the URP, the State is required to demonstrate that the State's choice was reasonable and that it was unreasonable to meet the URP.

In our review of a state's RP determination for a potentially affected source, it is our task to determine that the state reasonably considered the relevant factors. Thus, in approving South Dakota's RP determination for Kilns #4 and #5, we are not stating a principle that EPA considers any cost excessive when the visibility benefits are minimal, or are below some threshold. Instead, we are finding that the State considered the factors set out in the CAA and reached a result that we are not prepared to say is unreasonable. We also do not find it unreasonable for a state to rely on baseline visibility impacts to assess potential controls. While modeling of the reductions from controls could give a more precise measure of visibility benefits, baseline visibility impacts do bear a rational relation to visibility benefits. At a minimum, visibility benefits are bounded by baseline visibility impacts.

Furthermore, what is reasonable is subject to a certain amount of variation from state to state, from facility to facility, and from location to location.[22] EPA, therefore, rejects the notion that the reasonableness of a state's RP determination should be assessed against a ''national norm'' based on dollars per deciview.

EPA also rejects the comparison of South Dakota's determination to not impose SNCR at Kiln #6 with Colorado's determination to impose SNCR at the Holcim Florence facility. The details show the facilities are not similar. In its RP determination for the Holcim Florence facility, Colorado noted that the existing design of the facility, in particular the preheater/precalciner vessels, provided locations with appropriate temperatures for injection of ammonia. Colorado therefore considered SNCR to be technically and economically feasible, and derived a cost effectiveness of $2,293 per ton of NO_X removed for SNCR.[23] In contrast, South Dakota states that the existing design of Kiln #6 does not provide appropriate locations for use of SNCR; in other words, that an effective installation of SNCR would require significant process modifications.

Comment: The NPS stated that DENR and EPA should explain why the cost estimates for SNCR at Kilns #4 and #5 were so much higher than average. Commenter also stated that DENR used EPA's Nov. 2007 ''Alternative Control Techniques Document Update—NO_X Emissions from New Cement Kilns'' to

[21] EPA calculated Q/D as follows: The total emissions (SO_2 + NO_X) in tons per year for a source divided by the source's distance in kilometers to the nearest Class I Federal area.

[22] For example, in one notice cited by NPS, we stated that a cost effectiveness value was ''well within the *range of values* we have considered reasonable for BART and that states other than North Dakota have considered cost effective.'' 76 FR 58570 (Sept. 21, 2011) (emphasis added).

[23] Colorado Regional Haze SIP, Appendix D, Reasonable Progress (RP) Four-Factor Analysis of Control Options for Holcim Portland Plant, Florence, Colorado, p. 16.

estimate the cost of an SNCR system, though this document was developed for the review of dry kilns and not a wet kiln.

Response: The State provided its explanation for its derivation of costs for SNCR.[24] In discussing its derivation of costs, South Dakota recognized that EPA's November 2007 document was developed for dry kilns. South Dakota stated that SNCR had only been used on wet kilns in Europe and recently on one wet kiln in the United States. Regardless, by any methodology, the cost-effectiveness of SNCR would likely be higher than that for LNB, while, based on estimates by the State on which the NPS did not comment, both SNCR and LNB would have the same control efficiency of 30 to 40%. As explained elsewhere, we are not prepared to find that South Dakota was unreasonable in relying on baseline visibility impacts for Kilns #4 and #5 in determining that LNB (or any other cost-effective controls) were not reasonable. Given that and the higher likely cost-effectiveness of SNCR for the same reductions as LNB, the reasons given in our responses for Kiln #6 apply with equal force to SNCR for Kilns #4 and #5.

Comment: The NPS stated that South Dakota rejected the results of the four-factor analyses which show additional controls are reasonable on GCC Dacotah Cement Kilns #4 and #5. The NPS asserted that EPA ''should conduct a valid four-factor analysis (which includes an up-to-date review of SNCR) for all three kilns at GCC Dacotah Cement.''

Response: In this action, it is not EPA's task in the first instance to independently conduct its own analysis of the four statutory RP factors. As discussed above, it is EPA's task to review South Dakota's determination. With regard to GCC Dacotah Kiln #6, EPA is not prepared to find that South Dakota was unreasonable in relying on the 2003 BACT determination with regard to GCC Dacotah Kiln #6. With regard to Kilns #4 and #5, South Dakota considered the four statutory RP factors. South Dakota then considered the baseline visibility impacts of Kilns #4 and #5 combined and decided not to impose controls. EPA is not prepared to find that South Dakota was unreasonable in that decision.

Comment: The NPS stated that GCC Dacotah Kiln #6 should not be allowed to operate until 2018 and beyond ''without current state-of-the-art emission controls, or even any evaluation of its emission controls, while it continues to affect visibility at Wind Cave and Badlands national parks.''

Response: RP does not per se require use of the most current emission controls. As discussed elsewhere, various potential controls were evaluated in the State's 2003 BACT determination for Kiln #6. We, therefore, disagree with the statements to the extent that they argue we are compelled to disapprove the State's Regional Haze SIP with regard to GCC Dacotah Kiln #6.

Comment: The NPS stated that, on August 17, 2011, it commented to DENR that the RP analysis should evaluate controls for Kiln #6 and that the NPS believes now, as it did in commenting on the 2003 PSD permit, that SNCR is a feasible option for cement kilns. The NPS stated a response to this comment should have been made available in the DENR public records, and that DENR has not met the requirement of 40 CFR 51.308(i)(3) to ''provide in its Regional Haze SIP a description of how it addressed any comments provided by the FLMs.''

Response: To assess South Dakota's response to the NPS's comments, it is useful to discuss the history of the development of the South Dakota Regional Haze SIP. On January 15, 2010, the State provided a draft SIP to the FLMs for consultation. The NPS commented generally that the SIP was lacking four-factor analyses of potentially affected sources for RP. The EPA also made specific suggestions regarding which facilities, at a minimum, seemed to warrant four-factor analyses under RP.

On August 23, 2010, South Dakota provided a draft SIP for public comment. This draft also did not include four-factor analyses of potentially affected sources. The NPS did not comment (nor was it required to) on the issue; the EPA commented that the SIP should contain the four-factor analyses and again suggested several facilities, at a minimum, to be analyzed.

On January 21, 2011, South Dakota promulgated a final Regional Haze SIP. This version included four-factor analyses of some potentially affected sources for RP including GCC Dacotah Kilns #4 and #5. The SIP included responses to both FLM and public comments.

However, the State subsequently amended the SIP to, among other things, evaluate an additional control technology, SNCR, at Kilns #4 and #5. As a result, South Dakota provided a draft amended SIP on September 19, 2011. During the public comment period, the NPS commented on Kiln #6 as the NPS has stated above. The State presented the issue of SNCR for Kiln #6 to the South Dakota Board of Minerals and Environment at a hearing on August 18, 2011. South Dakota stated its reasons for relying on the 2003 BACT determination to reject SNCR as a possible control for Kiln #6 for RP.[25]

Given these particular circumstances, we think that South Dakota has sufficiently met the requirements for FLM coordination and response to comments with regard to regional haze requirements for Kiln #6.

H. General Comments

Comment: The NPCA stated that South Dakota's SIP is inconsistent in that it requires adequate controls for certain facilities and not others. The commenter urged EPA to require additional emission reductions from South Dakota sources, mirroring the significant reductions being required in other States and for other sources throughout the country. The commenter referenced other actions in Region 6 and Region 8 as examples.[26]

Response: We took into consideration South Dakota's analyses based on the statutory factors and determined that these analyses, and the control selections they support, were satisfactory to meet the regional haze requirements in this planning period. The State imposed stringent levels of control on its one BART source, Big Stone I, and provided sufficient justification based on its case-by-case analysis for emission limits at this source that are slightly above some of the examples cited by commenters. We also continue to find that, for GCC Dacotah under RP that the State provided sufficient basis for its reliance on its 2003 BACT determination as described elsewhere in our responses. Finally, as explained in the context of RP determinations in our responses elsewhere in this action, the Regional Haze Rule does not impose uniform numeric standards across States for emissions reductions. Therefore, the examples cited by NPCA are of limited utility.

Comment: One commenter stated that national parks and wilderness areas boost their area economies. Specifically, commenter cited 2010 visitation

[24] South Dakota Regional Haze SIP, Table 7–2, p. 3.

[25] The audio of the August 18, 2011 hearing is available on the Board's Web site: *http://denr.sd.gov/boards/2011/2011sche.aspx.* We have placed a transcript of the relevant portions in the docket for this action.

[26] Federal Implementation Plans for the San Juan Generating Station in New Mexico (76 FR 52388) and Oklahoma (76 FR 81727) and the proposed Federal Implementation Plan for North Dakota (76 FR 58570).

statistics for Badlands National Park (977,778) and Wind Cave National Park (577,141), and noted that similar visitation in 2009 resulted in $61 million in spending and over 1,000 jobs. The commenter stated that reduction in visibility could result in decreased visits to Class I areas. The commenter also stated that installation of pollution control technologies is a job-creating mechanism.

Response: We agree with the comment. Although we did not consider the potential positive benefits to the local and national economies in making our decision today, we do expect that improved visibility would have a positive impact on tourism-dependent local economies. Also, some of these retrofits will create construction projects that we expect may take several years to complete, and will require well-paid, skilled labor which can potentially be drawn from the local area, which may benefit the economy.

Comment: One commenter stated that haze pollution significantly impacts human and ecosystem health. Specifically, the commenter asserted that haze pollution contributes to heart attacks, asthma attacks, chronic bronchitis and respiratory illness, increased hospital admissions, lost work and school days, and even premature death. The commenter also noted the specific haze pollutants NO_X, SO_2 and PM, which the commenter stated are all harmful to the human body.

The commenter also stated that haze pollution negatively impacts ecosystem health. The commenter specifically expressed concern for the effects of haze pollution on waterways, soils, plants and wildlife.

Response: We appreciate the commenter's concerns regarding the negative health impacts of emissions from facilities in South Dakota. We agree that the same $PM_{2.5}$ emissions that cause visibility impairment can be inhaled deep into lungs, which can cause respiratory problems, decreased lung function, aggravated asthma, bronchitis, and premature death. We also agree that the same NO_X emissions that cause visibility impairment also contribute to the formation of ground-level ozone, which has been linked with respiratory problems, aggravated asthma, and even permanent lung damage. We agree that these pollutants can have negative impacts on plants and ecosystems, damaging plants, trees and other vegetation, and reducing forest growth and crop yields, which could have a negative effect on species diversity in ecosystems. However, for purposes of this action, we are not authorized to consider these impacts in evaluating the reasonableness of South Dakota's Regional Haze SIP, and we have not done so.

Comment: The environmental advocacy group CREDO Action submitted comments from 225 individuals. Many of these comments were identical, and most if not all generally requested that EPA strengthen our proposal, specifically at Big Stone I and GCC Dacotah Cement.

Response: EPA appreciates the comments, but is approving South Dakota's Regional Haze SIP as proposed for the reasons stated in the proposal and in previous responses to comments in this action.

Comment: South Dakota DENR stated that it believes the South Dakota Regional Haze SIP will improve visibility in the State's parks and provide improved visitor experience, and commends those involved in developing the SIP.

Response: EPA agrees with the commenter.

III. Final Action

EPA is taking final action to approve the State of South Dakota's Regional Haze SIP, submitted by the State on January 21, 2011, along with an amendment submitted on September 19, 2011. EPA finds that the South Dakota Regional Haze SIP submittal meets all of the applicable regional haze requirements set forth in section 169A and 169B of the Act and in the Federal regulations codified at 40 CFR 51.300–308, and the requirements of 40 CFR part 51, subpart F and appendix V.

IV. Statutory and Executive Order Reviews

Under Executive Order 12866 (58 FR 51735, October 4, 1993), this action is not a ''significant regulatory action'' and therefore is not subject to review by the Office of Management and Budget. For this reason, this action is also not subject to Executive Order 13211, ''Actions Concerning Regulations That Significantly Affect Energy Supply, Distribution, or Use'' (66 FR 28355, May 22, 2001). This action merely approves state law as meeting Federal requirements and imposes no additional requirements beyond those imposed by state law. Accordingly, the Administrator certifies that this rule will not have a significant economic impact on a substantial number of small entities under the Regulatory Flexibility Act (5 U.S.C. 601 *et seq.*). Because this rule approves pre-existing requirements under state law and does not impose any additional enforceable duty beyond that required by state law, it does not contain any unfunded mandate or significantly or uniquely affect small governments, as described in the Unfunded Mandates Reform Act of 1995 (Pub. L. 104–4).

This rule also does not have tribal implications because it will not have a substantial direct effect on one or more Indian tribes, on the relationship between the Federal Government and Indian tribes, or on the distribution of power and responsibilities between the Federal Government and Indian tribes, as specified by Executive Order 13175 (65 FR 67249, November 9, 2000). This action also does not have Federalism implications because it does not have substantial direct effects on the States, on the relationship between the national government and the States, or on the distribution of power and responsibilities among the various levels of government, as specified in Executive Order 13132 (64 FR 43255, August 10, 1999). This action merely approves a state rule implementing a Federal standard, and does not alter the relationship or the distribution of power and responsibilities established in the Clean Air Act. This rule also is not subject to Executive Order 13045 ''Protection of Children from Environmental Health Risks and Safety Risks'' (62 FR 19885, April 23, 1997), because it approves a state rule implementing a Federal standard.

In reviewing SIP submissions, EPA's role is to approve State choices, provided that they meet the criteria of the Clean Air Act. In this context, in the absence of a prior existing requirement for the State to use voluntary consensus standards (VCS), EPA has no authority to disapprove a SIP submission for failure to use VCS. It would thus be inconsistent with applicable law for EPA, when it reviews a SIP submission, to use VCS in place of a SIP submission that otherwise satisfies the provisions of the Clean Air Act. Thus, the requirements of section 12(d) of the National Technology Transfer and Advancement Act of 1995 (15 U.S.C. 272 note) do not apply. This rule does not impose an information collection burden under the provisions of the Paperwork Reduction Act of 1995 (44 U.S.C. 3501 *et seq.*).

The Congressional Review Act, 5 U.S.C. 801 *et seq.,* as added by the Small Business Regulatory Enforcement Fairness Act of 1996, generally provides that before a rule may take effect, the agency promulgating the rule must submit a rule report, which includes a copy of the rule, to each House of the Congress and to the Comptroller General of the United States. EPA will submit a report containing this rule and other required information to the U.S. Senate,

the U.S. House of Representatives, and the Comptroller General of the United States prior to publication of the rule in the **Federal Register**. A major rule cannot take effect until 60 days after it is published in the **Federal Register**. This action is not a ''major rule'' as defined by 5 U.S.C. section 804(2).

Under section 307(b)(1) of the Clean Air Act, petitions for judicial review of this action must be filed in the United States Court of Appeals for the appropriate circuit by *June 25, 2012.* Filing a petition for reconsideration by the Administrator of this final rule does not affect the finality of this rule for the purposes of judicial review nor does it extend the time within which a petition for judicial review may be filed, and shall not postpone the effectiveness of such rule or action. This action may not be challenged later in proceedings to enforce its requirements. (See section 307(b)(2).)

List of Subjects in 40 CFR Part 52

Environmental protection, Air pollution control, Incorporation by reference, Intergovernmental relations, Nitrogen dioxide, Particulate matter, Reporting and recordkeeping requirements, Sulfur oxides, Volatile organic compounds.

Dated: March 29, 2012.

James B. Martin,

Regional Administrator, Region 8.

40 CFR part 52 is amended to read as follows:

PART 52—[AMENDED]

■ 1. The authority citation for part 52 continues to read as follows:

Authority: 42 U.S.C. 7401 *et seq.*

Subpart QQ—South Dakota

■ 2. In § 52.2170 the table in paragraph (c)(1) is amended by adding a new section, 74:36:21 Regional Haze Program, in numerical order and the table in paragraph (e) is amended by adding entries for XII. South Dakota Regional Haze State Implementation Plan, and XIII. South Dakota Regional Haze State Implementation Plan, Amendment, in numerical order.

The amendments read as follows:

§ 52.2170 Identification of plan.

* * * * *

(c) * * *

(1) * * *

State citation	Title/subject	State effective date	EPA approval date and citation [1]	Explanations
*	*	*	*	*
	74:36:21 Regional Haze Program			
74:36:21:01	Applicability	12/7/10	4/26/12, [Insert **Federal Register** page number where the document begins.]	
74:36:21:02	Definitions	9/19/11	4/26/12, [Insert **Federal Register** page number where the document begins.]	
74:36:21:03	Existing stationary facility defined	12/7/10	4/26/12, [Insert **Federal Register** page number where the document begins.]	
74:36:21:04	Visibility impact analysis	12/7/10	4/26/12, [Insert **Federal Register** page number where the document begins.]	
74:36:21:05	BART determination	12/7/10	4/26/12, [Insert **Federal Register** page number where the document begins.]	
74:36:21:06	BART determination for a BART-eligible coal-fired power plant.	9/19/11	4/26/12, [Insert **Federal Register** page number where the document begins.]	
74:36:21:07	Installation of controls based on visibility impact analysis or BART determination.	12/7/10	4/26/12, [Insert **Federal Register** page number where the document begins.]	
74:36:21:08	Operation and maintenance of controls.	12/7/10	4/26/12, [Insert **Federal Register** page number where the document begins.]	
74:36:21:09	Monitoring, recordkeeping, and reporting.	9/19/11	4/26/12, [Insert **Federal Register** page number where the document begins.]	
74:36:21:10	Permit to construct	12/7/10	4/26/12, [Insert **Federal Register** page number where the document begins.]	
74:36:21:11	Permit required for BART determination.	12/7/10	4/26/12, [Insert **Federal Register** page number where the document begins.]	
74:36:21:12	Federal land manager notification and review.	12/7/10	4/26/12, [Insert **Federal Register** page number where the document begins.]	

[1] In order to determine the EPA effective date for a specific provision listed in this table, consult the **Federal Register** notice cited in this column for the particular provision.

* * * * *

(e) * * *

Name of nonregulatory SIP provision	Applicable geographic or nonattainment area	State submittal date/adopted date	EPA approval date and citation [5]	Explanations
*	* *	*	* *	*
XII. South Dakota Regional Haze State Implementation Plan.	Statewide	Submitted: 1/21/11	4/26/12, [Insert **Federal Register** page number where the document begins.]	Excluding portions of the following: Sections 7.2, 7.3, 7.4, and 8.5 because these provisions were superseded by a later submittal.
XIII. South Dakota Regional Haze State Implementation Plan, Amendment.	Statewide	Submitted: 9/19/11	4/26/12, [Insert **Federal Register** page number where the document begins.]	Including only portions of the following: Sections 7.2, 7.3, 7.4, and 8.5; excluding all other portions of the submittal.

[5] In order to determine the EPA effective date for a specific provision listed in this table, consult the **Federal Register** notice cited in this column for the particular provision.

[FR Doc. 2012–8988 Filed 4–25–12; 8:45 am]

BILLING CODE 6560–50–P

ENVIRONMENTAL PROTECTION AGENCY

40 CFR Part 52

[EPA–R09–OAR–2012–0266; FRL–9665–5]

Interim Final Determination To Stay and Defer Sanctions, San Joaquin Valley Unified Air Pollution Control District

AGENCY: Environmental Protection Agency (EPA).

ACTION: Interim final rule.

SUMMARY: EPA is making an interim final determination to stay the imposition of offset sanctions and to defer the imposition of highway sanctions based on a proposed approval of revisions to the San Joaquin Valley Unified Air Pollution Control District (SJVUAPCD) portion of the California State Implementation Plan (SIP) published elsewhere in this **Federal Register**. The revisions concern SJVUAPCD Rule 4352, Solid Fuel Fired Boilers, Steam Generators and Process Heaters.

DATES: This interim final determination is effective on April 26, 2012. However, comments will be accepted until May 29, 2012.

ADDRESSES: Submit comments, identified by docket number EPA–R09–OAR–2012–0266, by one of the following methods:

1. *Federal eRulemaking Portal: www.regulations.gov.* Follow the on-line instructions.
2. *Email: steckel.andrew@epa.gov.*
3. *Mail or deliver:* Andrew Steckel (Air-4), U.S. Environmental Protection Agency Region IX, 75 Hawthorne Street, San Francisco, CA 94105–3901.

Instructions: All comments will be included in the public docket without change and may be made available online at *www.regulations.gov,* including any personal information provided, unless the comment includes Confidential Business Information (CBI) or other information whose disclosure is restricted by statute. Information that you consider CBI or otherwise protected should be clearly identified as such and should not be submitted through *www.regulations.gov* or email. *www.regulations.gov* is an ''anonymous access'' system, and EPA will not know your identity or contact information unless you provide it in the body of your comment. If you send email directly to EPA, your email address will be automatically captured and included as part of the public comment. If EPA cannot read your comment due to technical difficulties and cannot contact you for clarification, EPA may not be able to consider your comment.

Docket: Generally, documents in the docket for this action are available electronically at *www.regulations.gov* and in hard copy at EPA Region IX, 75 Hawthorne Street, San Francisco, California. While all documents in the docket are listed at *www.regulations.gov,* some information may be publicly available only at the hard copy location (e.g., copyrighted material, large maps), and some may not be publicly available in either location (e.g., CBI). To inspect the hard copy materials, please schedule an appointment during normal business hours with the contact listed in the **FOR FURTHER INFORMATION CONTACT** section.

FOR FURTHER INFORMATION CONTACT: Andrew Steckel, EPA Region IX, (415) 947–4115, *steckel.andrew@epa.gov.*

SUPPLEMENTARY INFORMATION: Throughout this document, ''we,'' ''us'' and ''our'' refer to EPA.

I. Background

On October 1, 2010 (75 FR 60623), we published a limited approval and limited disapproval of SJVUAPCD Rule 4352 as adopted locally on May 18, 2006 and submitted by the State on October 5, 2006. We based our limited disapproval action on certain deficiencies in the submittal. This disapproval action started a sanctions clock for imposition of offset sanctions 18 months after November 1, 2010 and highway sanctions 6 months later, pursuant to section 179 of the Clean Air Act (CAA) and our regulations at 40 CFR 52.31. Under 40 CFR 52.31(d)(1), offset sanctions apply eighteen months after the effective date of a disapproval and highway sanctions apply six months after the offset sanctions, unless we determine that the deficiencies forming the basis of the disapproval have been corrected.

On December 15, 2011, SJVUAPCD adopted revisions to Rule 4352 that were intended to correct the deficiencies identified in our October 1, 2010 limited approval and limited disapproval action. On February 23, 2012, the State submitted the revised rule to EPA. In the Proposed Rules section of today's **Federal Register**, we are proposing to fully approve this revised rule because we believe it corrects the deficiencies identified in our October 1, 2010 disapproval action. Based on today's proposed approval, we are taking this final rulemaking action, effective on publication, to stay the imposition of the offset sanctions and to defer the imposition of the highway sanctions that were triggered by our October 1, 2010 limited disapproval.

EPA is providing the public with an opportunity to comment on this stay/deferral of sanctions. If comments are submitted that change our assessment described in this final determination and the proposed full approval of

revised SJVUAPCD Rule 4352, we intend to take subsequent final action to reimpose sanctions pursuant to 40 CFR 52.31(d). If no comments are submitted that change our assessment, then all sanctions and sanction clocks will be permanently terminated on the effective date of a final rule approval.

II. EPA Action

We are making an interim final determination to stay the imposition of the offset sanctions and to defer the imposition of the highway sanctions associated with SJVUAPCD Rule 4352 based on our concurrent proposal to approve the State's SIP revision as correcting deficiencies that initiated sanctions.

Because EPA has preliminarily determined that the State has corrected the deficiencies identified in EPA's limited disapproval action, relief from sanctions should be provided as quickly as possible. Therefore, EPA is invoking the good cause exception under the Administrative Procedure Act (APA) in not providing an opportunity for comment before this action takes effect (5 U.S.C. 553(b)(3)). However, by this action EPA is providing the public with a chance to comment on EPA's determination after the effective date, and EPA will consider any comments received in determining whether to reverse such action.

EPA believes that notice-and-comment rulemaking before the effective date of this action is impracticable and contrary to the public interest. EPA has reviewed the State's submittal and, through its proposed action, is indicating that it is more likely than not that the State has corrected the deficiencies that started the sanctions clocks. Therefore, it is not in the public interest to initially impose sanctions or to keep applied sanctions in place when the State has most likely done all it can to correct the deficiencies that triggered the sanctions clocks. Moreover, it would be impracticable to go through notice-and-comment rulemaking on a finding that the State has corrected the deficiencies prior to the rulemaking approving the State's submittal. Therefore, EPA believes that it is necessary to use the interim final rulemaking process to stay and defer sanctions while EPA completes its rulemaking process on the approvability of the State's submittal. Moreover, with respect to the effective date of this action, EPA is invoking the good cause exception to the 30-day notice requirement of the APA because the purpose of this notice is to relieve a restriction (5 U.S.C. 553(d)(1)).

III. Statutory and Executive Order Reviews

This action stays and defers Federal sanctions and imposes no additional requirements.

Under Executive Order 12866 (58 FR 51735, October 4, 1993), this action is not a ''significant regulatory action'' and therefore is not subject to review by the Office of Management and Budget.

This action is not subject to Executive Order 13211, ''Actions Concerning Regulations That Significantly Affect Energy Supply, Distribution, or Use'' (66 FR 28355, May 22, 2001) because it is not a significant regulatory action.

The administrator certifies that this action will not have a significant economic impact on a substantial number of small entities under the Regulatory Flexibility Act (5 U.S.C. 601 *et seq.*).

This rule does not contain any unfunded mandate or significantly or uniquely affect small governments, as described in the Unfunded Mandates Reform Act of 1995 (Pub. L. 104–4).

This rule does not have tribal implications because it will not have a substantial direct effect on one or more Indian tribes, on the relationship between the Federal government and Indian tribes, or on the distribution of power and responsibilities between the Federal government and Indian tribes, as specified by Executive Order 13175 (65 FR 67249, November 9, 2000).

This action does not have Federalism implications because it does not have substantial direct effects on the States, on the relationship between the national government and the States, or on the distribution of power and responsibilities among the various levels of government, as specified in Executive Order 13132 (64 FR 43255, August 10, 1999).

This rule is not subject to Executive Order 13045, ''Protection of Children from Environmental Health Risks and Safety Risks'' (62 FR 19885, April 23, 1997), because it is not economically significant.

The requirements of section 12(d) of the National Technology Transfer and Advancement Act of 1995 (15 U.S.C. 272) do not apply to this rule because it imposes no standards.

This rule does not impose an information collection burden under the provisions of the Paperwork Reduction Act of 1995 (44 U.S.C. 3501 *et seq.*).

The Congressional Review Act, 5 U.S.C. 801 *et seq.,* as added by the Small Business Regulatory Enforcement Fairness Act of 1996, generally provides that before a rule may take effect, the agency promulgating the rule must submit a rule report to Congress and the Comptroller General. However, section 808 provides that any rule for which the issuing agency for good cause finds that notice and public procedure thereon are impracticable, unnecessary, or contrary to the public interest, shall take effect at such time as the agency promulgating the rule determines. 5 U.S.C. 808(2). EPA has made such a good cause finding, including the reasons therefor, and established an effective date of April 26, 2012. EPA will submit a report containing this rule and other required information to the U.S. Senate, the U.S. House of Representatives, and the Comptroller General of the United States prior to publication of the rule in the **Federal Register**. A major rule cannot take effect until 60 days after it is published in the **Federal Register**. This rule is not a ''major rule'' as defined by 5 U.S.C. 804(2).

Under section 307(b)(1) of the CAA, petitions for judicial review of this action must be filed in the United States Court of Appeals for the appropriate circuit by June 25, 2012. Filing a petition for reconsideration by the Administrator of this final rule does not affect the finality of this rule for the purpose of judicial review nor does it extend the time within which petition for judicial review may be filed, and shall not postpone the effectiveness of such rule or action. This action may not be challenged later in proceedings to enforce its requirements (see section 307(b)(2)).

List of Subjects in 40 CFR Part 52

Environmental protection, Air pollution control, Intergovernmental regulations, Nitrogen dioxide, Ozone, Particulate matter, Reporting and recordkeeping requirements.

Dated: April 13, 2012.

Jared Blumenfeld,

Regional Administrator, Region IX.

[FR Doc. 2012–10077 Filed 4–25–12; 8:45 am]

BILLING CODE 6560–50–P

DEPARTMENT OF HOMELAND SECURITY

Federal Emergency Management Agency

44 CFR Part 64

[Docket ID FEMA–2012–0003; Internal Agency Docket No. FEMA–8227]

Suspension of Community Eligibility

AGENCY: Federal Emergency Management Agency, DHS.

ACTION: Final rule.

SUMMARY: This rule identifies communities where the sale of flood insurance has been authorized under the National Flood Insurance Program (NFIP) that are scheduled for suspension on the effective dates listed within this rule because of noncompliance with the floodplain management requirements of the program. If the Federal Emergency Management Agency (FEMA) receives documentation that the community has adopted the required floodplain management measures prior to the effective suspension date given in this rule, the suspension will not occur and a notice of this will be provided by publication in the **Federal Register** on a subsequent date.

DATES: *Effective Dates:* The effective date of each community's scheduled suspension is the third date (''Susp.'') listed in the third column of the following tables.

FOR FURTHER INFORMATION CONTACT: If you want to determine whether a particular community was suspended on the suspension date or for further information, contact David Stearrett, Federal Insurance and Mitigation Administration, Federal Emergency Management Agency, 500 C Street SW., Washington, DC 20472, (202) 646–2953.

SUPPLEMENTARY INFORMATION: The NFIP enables property owners to purchase Federal flood insurance that is not otherwise generally available from private insurers. In return, communities agree to adopt and administer local floodplain management measures aimed at protecting lives and new construction from future flooding. Section 1315 of the National Flood Insurance Act of 1968, as amended, 42 U.S.C. 4022, prohibits the sale of NFIP flood insurance unless an appropriate public body adopts adequate floodplain management measures with effective enforcement measures. The communities listed in this document no longer meet that statutory requirement for compliance with program regulations, 44 CFR part 59. Accordingly, the communities will be suspended on the effective date in the third column. As of that date, flood insurance will no longer be available in the community. We recognize that some of these communities may adopt and submit the required documentation of legally enforceable floodplain management measures after this rule is published but prior to the actual suspension date. These communities will not be suspended and will continue to be eligible for the sale of NFIP flood insurance. A notice withdrawing the suspension of such communities will be published in the **Federal Register**.

In addition, FEMA publishes a Flood Insurance Rate Map (FIRM) that identifies the Special Flood Hazard Areas (SFHAs) in these communities. The date of the FIRM, if one has been published, is indicated in the fourth column of the table. No direct Federal financial assistance (except assistance pursuant to the Robert T. Stafford Disaster Relief and Emergency Assistance Act not in connection with a flood) may be provided for construction or acquisition of buildings in identified SFHAs for communities not participating in the NFIP and identified for more than a year on FEMA's initial FIRM for the community as having flood-prone areas (section 202(a) of the Flood Disaster Protection Act of 1973, 42 U.S.C. 4106(a), as amended). This prohibition against certain types of Federal assistance becomes effective for the communities listed on the date shown in the last column. The Administrator finds that notice and public comment procedures under 5 U.S.C. 553(b), are impracticable and unnecessary because communities listed in this final rule have been adequately notified.

Each community receives 6-month, 90-day, and 30-day notification letters addressed to the Chief Executive Officer stating that the community will be suspended unless the required floodplain management measures are met prior to the effective suspension date. Since these notifications were made, this final rule may take effect within less than 30 days.

National Environmental Policy Act. This rule is categorically excluded from the requirements of 44 CFR Part 10, Environmental Considerations. No environmental impact assessment has been prepared.

Regulatory Flexibility Act. The Administrator has determined that this rule is exempt from the requirements of the Regulatory Flexibility Act because the National Flood Insurance Act of 1968, as amended, Section 1315, 42 U.S.C. 4022, prohibits flood insurance coverage unless an appropriate public body adopts adequate floodplain management measures with effective enforcement measures. The communities listed no longer comply with the statutory requirements, and after the effective date, flood insurance will no longer be available in the communities unless remedial action takes place.

Regulatory Classification. This final rule is not a significant regulatory action under the criteria of section 3(f) of Executive Order 12866 of September 30, 1993, Regulatory Planning and Review, 58 FR 51735.

Executive Order 13132, Federalism. This rule involves no policies that have federalism implications under Executive Order 13132.

Executive Order 12988, Civil Justice Reform. This rule meets the applicable standards of Executive Order 12988.

Paperwork Reduction Act. This rule does not involve any collection of information for purposes of the Paperwork Reduction Act, 44 U.S.C. 3501 *et seq.*

List of Subjects in 44 CFR Part 64

Flood insurance, Floodplains.

Accordingly, 44 CFR part 64 is amended as follows:

PART 64—[AMENDED]

■ 1. The authority citation for part 64 continues to read as follows:

Authority: 42 U.S.C. 4001 *et seq.;* Reorganization Plan No. 3 of 1978, 3 CFR, 1978 Comp.; p. 329; E.O. 12127, 44 FR 19367, 3 CFR, 1979 Comp.; p. 376.

§ 64.6 [Amended]

■ 2. The tables published under the authority of § 64.6 are amended as follows:

State and location	Community No.	Effective date authorization/cancellation of sale of flood insurance in community	Current effective map date	Date certain Federal assistance no longer available in SFHAs
Region II				
New Jersey:				
Alexandria, Township of, Hunterdon County.	340230	June 28, 1973, Emerg; April 1, 1981, Reg; May 2, 2012, Susp.	May 2, 2012	May 2, 2012.

State and location	Community No.	Effective date authorization/cancellation of sale of flood insurance in community	Current effective map date	Date certain Federal assistance no longer available in SFHAs
Delaware, Township of, Hunterdon County.	340506	October 21, 1974, Emerg; January 20, 1982, Reg; May 2, 2012, Susp.	.....do*	Do.
Frenchtown, Borough of, Hunterdon County.	340234	January 15, 1974, Emerg; March 16, 1981, Reg; May 2, 2012, Susp.	.....do	Do.
Holland, Township of, Hunterdon County.	340509	June 24, 1975, Emerg; March 16, 1981, Reg; May 2, 2012, Susp.	.....do	Do.
Kingwood, Township of, Hunterdon County.	340499	November 21, 1973, Emerg; November 4, 1981, Reg; May 2, 2012, Susp.	.....do	Do.
Lambertville, City of, Hunterdon County	340237	September 4, 1973, Emerg; April 1, 1981, Reg; May 2, 2012, Susp.	.....do	Do.
Milford, Borough of, Hunterdon County	340239	August 6, 1975, Emerg; November 18, 1981, Reg; May 2, 2012, Susp.	.....do	Do.
Stockton, Borough of, Hunterdon County.	345322	April 23, 1971, Emerg; June 16, 1972, Reg; May 2, 2012, Susp.	.....do	Do.
West Amwell, Township of, Hunterdon County.	340243	November 17, 1972, Emerg; April 1, 1981, Reg; May 2, 2012, Susp.	.....do	Do.
New York:				
Amenia, Town of, Dutchess County	361332	February 4, 1976, Emerg; September 24, 1984, Reg; May 2, 2012, Susp.	.....do	Do.
Beacon, City of, Dutchess County	360217	May 8, 1975, Emerg; March 1, 1984, Reg; May 2, 2012, Susp.	.....do	Do.
Beekman, Town of, Dutchess County ...	361333	February 5, 1976, Emerg; September 5, 1984, Reg; May 2, 2012, Susp.	.....do	Do.
Clinton, Town of, Dutchess County	361334	March 1, 1976, Emerg; July 5, 1984, Reg; May 2, 2012, Susp.	.....do	Do.
Dover, Town of, Dutchess County	361335	March 22, 1976, Emerg; August 15, 1984, Reg; May 2, 2012, Susp.	.....do	Do.
East Fishkill, Town of, Dutchess County	361336	July 24, 1975, Emerg; June 15, 1984, Reg; May 2, 2012, Susp.	.....do	Do.
Fishkill, Town of, Dutchess County	361337	September 19, 1975, Emerg; June 1, 1984, Reg; May 2, 2012, Susp.	.....do	Do.
Fishkill, Village of, Dutchess County	360218	August 20, 1975, Emerg; March 15, 1984, Reg; May 2, 2012, Susp.	.....do	Do.
Hyde Park, Town of, Dutchess County	361338	May 6, 1976, Emerg; June 15, 1984, Reg; May 2, 2012, Susp.	.....do	Do.
LaGrange, Town of, Dutchess County ..	361011	February 26, 1975, Emerg; September 28, 1979, Reg; May 2, 2012, Susp.	.....do	Do.
Milan, Town of, Dutchess County	361339	November 6, 1975, Emerg; August 10, 1979, Reg; May 2, 2012, Susp.	.....do	Do.
Millbrook, Village of, Dutchess County	360219	March 25, 1975, Emerg; February 27, 1984, Reg; May 2, 2012, Susp.	.....do	Do.
Millerton, Village of, Dutchess County ..	360220	June 24, 1975, Emerg; January 3, 1985, Reg; May 2, 2012, Susp.	.....do	Do.
North East, Town of, Dutchess County	361340	August 8, 1975, Emerg; September 5, 1984, Reg; May 2, 2012, Susp.	.....do	Do.
Pawling, Town of, Dutchess County	361341	June 1, 1976, Emerg; January 3, 1985, Reg; May 2, 2012, Susp.	.....do	Do.
Pawling, Village of, Dutchess County ...	361517	March 4, 1976, Emerg; August 1, 1984, Reg; May 2, 2012, Susp.	.....do	Do.
Pine Plains, Town of, Dutchess County	361141	June 16, 1976, Emerg; October 5, 1984, Reg; May 2, 2012, Susp.	.....do	Do.
Pleasant Valley, Town of, Dutchess County.	360221	July 2, 1975, Emerg; January 16, 1980, Reg; May 2, 2012, Susp.	.....do	Do.
Poughkeepsie, City of, Dutchess County.	360222	May 1, 1975, Emerg; January 5, 1984, Reg; May 2, 2012, Susp.	.....do	Do.
Poughkeepsie, Town of, Dutchess County.	361142	October 21, 1974, Emerg; November 15, 1978, Reg; May 2, 2012, Susp.	.....do	Do.
Red Hook, Town of, Dutchess County ..	361143	May 19, 1975, Emerg; October 16, 1984, Reg; May 2, 2012, Susp.	.....do	Do.
Red Hook, Village of, Dutchess County	361614	May 10, 1985, Emerg; May 10, 1985, Reg; May 2, 2012, Susp.	.....do	Do.
Rhinebeck, Town of, Dutchess County	361144	September 12, 1975, Emerg; September 5, 1984, Reg; May 2, 2012, Susp.	.....do	Do.
Rhinebeck, Village of, Dutchess County	361999	February 9, 1984, Emerg; February 1, 1985, Reg; May 2, 2012, Susp.	.....do	Do.
Stanford, Town of, Dutchess County	361145	March 19, 1976, Emerg; January 21, 1983, Reg; May 2, 2012, Susp.	.....do	Do.
Tivoli, Village of, Dutchess County	361507	March 18, 1976, Emerg; August 1, 1984, Reg; May 2, 2012, Susp.	.....do	Do.

State and location	Community No.	Effective date authorization/cancellation of sale of flood insurance in community	Current effective map date	Date certain Federal assistance no longer available in SFHAs
Union Vale, Town of, Dutchess County	361146	July 28, 1975, Emerg; September 2, 1988, Reg; May 2, 2012, Susp.	.....do	Do.
Wappinger, Town of, Dutchess County	361387	February 12, 1975, Emerg; June 15, 1979, Reg; May 2, 2012, Susp.	.....do	Do.
Wappinger Falls, Village of, Dutchess County.	360223	April 18, 1975, Emerg; September 1, 1978, Reg; May 2, 2012, Susp.	.....do	Do.
Washington, Town of, Dutchess County	361147	December 11, 1975, Emerg; August 17, 1979, Reg; May 2, 2012, Susp.	.....do	Do.
Region IV				
Florida:				
Bradford County, Unincorporated Areas	120015	May 23, 1975, Emerg; November 15, 1989, Reg; May 2, 2012, Susp.	.....do	Do.
Brooker, Town of, Bradford County	120016	N/A, Emerg; April 16, 1990, Reg; May 2, 2012, Susp.	.....do	Do.
Hampton, City of, Bradford County	120627	N/A, Emerg; January 15, 1999, Reg; May 2, 2012, Susp.	.....do	Do.
Lawtey, City of, Bradford County	120628	N/A, Emerg; March 19, 1998, Reg; May 2, 2012, Susp.	.....do	Do.
Starke, City of, Bradford County	120017	June 27, 1975, Emerg; June 18, 1987, Reg; May 2, 2012, Susp.	.....do	Do.
Mississippi:				
Arcola, Town of, Washington County	280178	May 14, 1973, Emerg; August 1, 1986, Reg; May 2, 2012, Susp.	.....do	Do.
Greenville, City of, Washington County	280179	April 10, 1973, Emerg; August 1, 1979, Reg; May 2, 2012, Susp.	.....do	Do.
Hollandale, City of, Washington County	280180	May 4, 1973, Emerg; January 14, 1983, Reg; May 2, 2012, Susp.	.....do	Do.
Leland, City of, Washington County	280181	May 2, 1973, Emerg; February 15, 1979, Reg; May 2, 2012, Susp.	.....do	Do.
Washington County, Unincorporated Areas.	280177	May 4, 1973, Emerg; September 3, 1980, Reg; May 2, 2012, Susp.	.....do	Do.
Region V				
Ohio:				
Lisbon, Village of, Columbiana County	390085	February 8, 1977, Emerg; September 30, 1988, Reg; May 2, 2012, Susp.	.....do	Do.
Wisconsin:				
Burlington, City of, Racine County	550348	July 18, 1973, Emerg; May 15, 1978, Reg; May 2, 2012, Susp.	.....do	Do.
Caledonia, Village of, Racine County ...	550628	N/A, Emerg; December 5, 2008, Reg; May 2, 2012, Susp.	.....do	Do.
Mount Pleasant, Village of, Racine County.	550322	N/A, Emerg; April 28, 2008, Reg; May 2, 2012, Susp.	.....do	Do.
Racine, City of, Racine County	555575	March 26, 1971, Emerg; June 1, 1973, Reg; May 2, 2012, Susp.	.....do	Do.
Racine County, Unincorporated Areas ..	550347	July 5, 1973, Emerg; April 1, 1982, Reg; May 2, 2012, Susp.	.....do	Do.
Rochester, Village of, Racine County ...	550352	March 21, 1975, Emerg; January 2, 1981, Reg; May 2, 2012, Susp.	.....do	Do.
Sturtevant, Village of, Racine County ...	550353	N/A, Emerg; April 28, 2008, Reg; May 2, 2012, Susp.	.....do	Do.
Union Grove, Village of, Racine County	550586	March 15, 1979, Emerg; June 17, 1986, Reg; May 2, 2012, Susp.	.....do	Do.
Waterford, Village of, Racine County	550354	June 10, 1975, Emerg; January 2, 1981, Reg; May 2, 2012, Susp.	.....do	Do.
Wind Point, Village of, Racine County ..	550355	March 18, 1975, Emerg; September 30, 1980, Reg; May 2, 2012, Susp.	.....do	Do.
Region VI				
Arkansas:				
Bald Knob, City of, White County	050222	September 19, 1975, Emerg; April 3, 1987, Reg; May 2, 2012, Susp.	.....do	Do.
Beebe, City of, White County	050223	October 9, 1975, Emerg; September 1, 1981, Reg; May 2, 2012, Susp.	.....do	Do.
Biggers, Town of, Randolph County	050388	November 20, 1975, Emerg; August 24, 1982, Reg; May 2, 2012, Susp.	.....do	Do.
Bradford, City of, White County	050131	January 14, 1983, Emerg; October 15, 1985, Reg; May 2, 2012, Susp.	.....do	Do.

State and location	Community No.	Effective date authorization/cancellation of sale of flood insurance in community	Current effective map date	Date certain Federal assistance no longer available in SFHAs
Georgetown, Town of, White County	050605	February 21, 2001, Emerg; May 13, 2004, Reg; May 2, 2012, Susp.	do	Do.
Higginson, Town of, White County	050225	October 18, 2007, Emerg; December 1, 2007, Reg; May 2, 2012, Susp.	do	Do.
Judsonia, City of, White County	050226	May 9, 1975, Emerg; September 1, 1987, Reg; May 2, 2012, Susp.	do	Do.
Kensett, City of, White County	050227	January 19, 1976, Emerg; August 1, 1987, Reg; May 2, 2012, Susp.	do	Do.
Maynard, Town of, Randolph County	050265	August 7, 1975, Emerg; September 21, 1982, Reg; May 2, 2012, Susp.	do	Do.
McRae, City of, White County	050228	August 20, 1975, Emerg; June 25, 1976, Reg; May 2, 2012, Susp.	do	Do.
Pocahontas, City of, Randolph County	050183	September 25, 1974, Emerg; January 20, 1982, Reg; May 2, 2012, Susp.	do	Do.
Randolph County, Unincorporated Areas.	050460	March 10, 1983, Emerg; April 1, 1988, Reg; May 2, 2012, Susp.	do	Do.
Reyno, Town of, Randolph County	050283	February 26, 1976, Emerg; August 24, 1982, Reg; May 2, 2012, Susp.	do	Do.
Searcy, City of, White County	050229	May 6, 1975, Emerg; February 4, 1981, Reg; May 2, 2012, Susp.	do	Do.
White County, Unincorporated Areas	050467	October 7, 1997, Emerg; March 1, 2000, Reg; May 2, 2012, Susp.	do	Do.
Texas:				
Llano County, Unincorporated Areas	481234	January 9, 1980, Emerg; September 18, 1991, Reg; May 2, 2012, Susp.	do	Do.
Sunrise Beach Village, City of, Llano County.	481531	April 16, 1990, Emerg; September 27, 1991, Reg; May 2, 2012, Susp.	do	Do.
Region VII				
Kansas:				
Goddard, City of, Sedgwick County	200500	November 30, 1977, Emerg; June 10, 1980, Reg; May 2, 2012, Susp.	do	Do.
Maize, City of, Sedgwick County	200520	N/A, Emerg; December 24, 2002, Reg; May 2, 2012, Susp.	do	Do.
Sedgwick County, Unincorporated Areas.	200321	July 17, 1975, Emerg; June 3, 1986, Reg; May 2, 2012, Susp.	do	Do.
Wichita, City of, Sedgwick County	200328	March 24, 1972, Emerg; May 15, 1986, Reg; May 2, 2012, Susp.	do	Do.
Region VIII				
Colorado:				
Fort Collins, City of, Larimer County	080102	August 14, 1974, Emerg; July 16, 1979, Reg; May 2, 2012, Susp.	do	Do.
Larimer County, Unincorporated Areas	080101	July 2, 1974, Emerg; April 2, 1979, Reg; May 2, 2012, Susp.	do	Do.
Utah:				
Carbon County, Unincorporated Areas	490032	November 27, 1974, Emerg; November 15, 1979, Reg; May 2, 2012, Susp.	do	Do.
East Carbon, City of, Carbon County	490225	March 7, 1975, Emerg; May 1, 1986, Reg; May 2, 2012, Susp.	do	Do.
Ephraim, City of, Sanpete County	490112	January 31, 1975, Emerg; April 3, 1987, Reg; May 2, 2012, Susp.	do	Do.
Fairview, City of, Sanpete County	490113	June 12, 1975, Emerg; February 1, 1987, Reg; May 2, 2012, Susp.	do	Do.
Gunnison, City of, Sanpete County	490115	August 27, 1975, Emerg; January 30, 1984, Reg; May 2, 2012, Susp.	do	Do.
Helper, City of, Carbon County	490034	June 10, 1975, Emerg; March 1, 1979, Reg; May 2, 2012, Susp.	do	Do.
Manti, City of, Sanpete County	490116	July 10, 1975, Emerg; August 4, 1987, Reg; May 2, 2012, Susp.	do	Do.
Mayfield, Town of, Sanpete County	490117	July 15, 2010, Emerg; N/A, Reg; May 2, 2012, Susp.	do	Do.
Moroni, City of, Sanpete County	490118	July 9, 1975, Emerg; August 5, 1980, Reg; May 2, 2012, Susp.	do	Do.
Mount Pleasant, City of, Sanpete County.	490213	February 25, 1976, Emerg; September 24, 1984, Reg; May 2, 2012, Susp.	do	Do.
Price, City of, Carbon County	490036	April 26, 1974, Emerg; March 1, 1979, Reg; May 2, 2012, Susp.	do	Do.
Sanpete County, Unincorporated Areas	490111	March 2, 1976, Emerg; June 1, 1986, Reg; May 2, 2012, Susp.	do	Do.

State and location	Community No.	Effective date authorization/cancellation of sale of flood insurance in community	Current effective map date	Date certain Federal assistance no longer available in SFHAs
Spring City, City of, Sanpete County	490119	May 7, 1976, Emerg; August 5, 1980, Reg; May 2, 2012, Susp.	.....do	Do.
Sunnyside, City of, Carbon County	490205	June 16, 1975, Emerg; September 29, 1978, Reg; May 2, 2012, Susp.	.....do	Do.
Wellington, City of, Carbon County	490037	February 9, 1977, Emerg; February 2, 1984, Reg; May 2, 2012, Susp.	.....do	Do.

* do = Ditto.
Code for reading third column: Emerg.—Emergency; Reg.—Regular; Susp.—Suspension.

Dated: April 12, 2012.

David L. Miller,

Associate Administrator, Federal Insurance and Mitigation Administration, Department of Homeland Security, Federal Emergency Management Agency.

[FR Doc. 2012–10001 Filed 4–25–12; 8:45 am]

BILLING CODE 9110–12–P

DEPARTMENT OF TRANSPORTATION

Federal Motor Carrier Safety Administration

49 CFR Part 386

[Docket No. FMCSA–2011–0259]

RIN 2126–AB38

Amendment to Agency Rules of Practice

AGENCY: Federal Motor Carrier Safety Administration, DOT.

ACTION: Final rule.

SUMMARY: The Federal Motor Carrier Safety Administration (FMCSA) amends its Rules of Practice for Motor Carrier, Intermodal Equipment Provider, Broker, Freight Forwarder, and Hazardous Materials proceedings. The Agency clarifies that paying the full proposed civil penalty in an enforcement proceeding, either in response to a Notice of Claim (NOC) or later in the proceeding, does not allow respondents to unilaterally avoid an admission of liability for the violations charged. Additionally, the Agency establishes procedures for issuing out-of-service orders to motor carriers, intermodal equipment providers, brokers, and freight forwarders it determines are reincarnations of other entities with a history of failing to comply with statutory or regulatory requirements; these procedures will provide for an administrative review before the out-of-service order takes effect. Finally, the Agency establishes a process for consolidating Agency records of reincarnated companies with their predecessor entities.

DATES: This rule is effective May 29, 2012.

ADDRESSES: For access to the docket to read background documents, including those referenced in this document, or to read comments received, go to *http://www.regulations.gov* at any time and insert ''FMCSA–2011–0259'' in the ''Keyword'' box, and then click ''Search.'' You may also view the docket online by visiting the Docket Management Facility in Room W12–140, DOT Building, 1200 New Jersey Avenue SE., Washington, DC, between 9 a.m. and 5 p.m., ET Monday through Friday, except Federal holidays.

Anyone is able to search the electronic form for all comments received into any of our dockets by the name of the individual submitting the comment (or signing the comment, if submitted on behalf of an association, business, labor union, etc.). You may review the U.S. Department of Transportation's (DOT) complete Privacy Act Statement in the **Federal Register** published on January 17, 2008 (73 FR 3316), or you may visit *http://edocket.acces.gpo.gov/2008/pdf/E8-785.pdf.*

FOR FURTHER INFORMATION CONTACT: Sabrina Redd, Office of Chief Counsel, Federal Motor Carrier Safety Administration, 1200 New Jersey Avenue SE., Washington, DC 20590–0001, by telephone at (202) 366–6424 or via email at *sabrina.redd@dot.gov.* Office hours are from 9 a.m. to 5 p.m. ET, Monday through Friday, except Federal holidays. If you have questions on viewing or submitting material to the docket, contact Renee V. Wright, Program Manager, Docket Operations, telephone (202) 366–9826.

SUPPLEMENTARY INFORMATION:

Table of Contents for Preamble

I. Abbreviations
II. Legal Basis for the Rulemaking
III. Background
A. Section 386.18
B. Section 386.73
IV. Discussion of Comments
A. Comments to Section 386.18
B. Comments to Section 386.73
C. Small Business Impact
V. Discussion of Rule
VI. Regulatory Analyses

I. Abbreviations

Advocates Advocates for Highway and Auto Safety
AMSA American Moving and Storage Association
ATA American Trucking Associations, Inc.
HMSP Hazardous Materials Safety Permit Program
IME Institute of Makers of Explosives
NATC North American Transportation Consultants, Inc.
OOIDA Owner-Operator Independent Drivers Association
TIA Transportation Intermediaries Association

II. Legal Basis for the Rulemaking

Congress has delegated certain powers to regulate interstate commerce to DOT in numerous pieces of legislation, most notably in section 6 of the Department of Transportation Act (DOT Act) (Pub. L. 89–670, 80 Stat. 931 (1966)). Section 6(e)(6)(C) of the DOT Act transferred to DOT the authority of the Interstate Commerce Commission (ICC) to regulate the qualifications and maximum hours of service of motor carrier employees, the safety of operations, and the equipment of motor carriers in interstate commerce. This authority, first granted to the ICC in the Motor Carrier Act of 1935 (Pub. L. 74–255, 49 Stat. 543), now appears in chapter 315 of title 49 of the U.S. Code. The regulations issued under this authority became known as the Federal Motor Carrier Safety Regulations (FMCSRs), appearing generally at 49 CFR parts 350–399. The administrative powers to enforce chapter 315 were also transferred from the ICC to the DOT in 1966 and appear in chapter 5 of title 49 of the U.S. Code. The Secretary of DOT (Secretary) delegated oversight of these provisions

to the FHWA, the predecessor agency to FMCSA.

Between 1984 and 1999, a number of statutes added to FHWA's authority. Various statutes authorize the enforcement of the FMCSRs, the Hazardous Materials Regulations (HMRs), and the Federal Motor Carrier Commercial Regulations (FMCCRs) and provide both civil and criminal penalties for violations. These statutes include the Motor Carrier Safety Act of 1984 (Pub. L. 98–554, 98 Stat. 2832), codified at 49 U.S.C. Chapter 311, Subchapter III; the Commercial Motor Vehicle Safety Act of 1986 (Pub. L. 99–570, 100 Stat. 3207–170), codified at 49 U.S.C. Chapter 313; the Hazardous Materials Transportation Uniform Safety Act of 1990 (Pub. L. 101–615, 104 Stat. 3244), codified at 49 U.S.C. Chapter 51; and the ICC Termination Act of 1995 (Pub. L. 104–88, 109 Stat. 803), codified at 49 U.S.C. Chapters 135–149. Specifically, the Secretary is authorized to prescribe regulations ensuring that commercial motor vehicles (CMVs) are operated safely under 49 U.S.C. 31136 (a)(1), and to determine whether an owner or operator is fit to safely operate CMVs under 49 U.S.C 31144. In order to ensure that carriers are fit to safely operate, it is necessary to monitor the safety performance history of individual carriers. FMCSA needs to monitor the safety performance history of carriers who ''reincarnate'' as a new carrier when faced with enforcement action in order to focus Agency enforcement efforts. This rule will ensure that carriers who have a proven history of unsafe operations are not able to evade regulation by simply forming a new company or obtaining new registration.

III. Background

On December 13, 2011, FMCSA published a notice of proposed rulemaking (76 FR 77458), with the intent to amend its rules of practice for motor carrier, intermodal equipment provider, broker, freight forwarder, and hazardous materials proceedings. FMCSA received seven public comment submissions regarding the NPRM. These comments are discussed in part IV, Discussion of Comments.

A. Section 386.18

FMCSA published a comprehensive revision of its Rules of Practice on May 18, 2005. This revision can be found in 49 CFR part 386 (70 FR 28467). The revision was intended to increase the efficiency of Agency administrative enforcement procedures, enhance due process, improve public understanding of the Agency's procedures, and accommodate recent programmatic changes.

Under § 386.11(c) of the revised Rules of Practice, civil penalty enforcement proceedings are initiated through service of an NOC, which is usually issued by the FMCSA Division Administrator for the State in which the respondent maintains its principal place of business. The NOC, which is usually based on a compliance review or other type of investigation or enforcement intervention, sets forth the provisions of law allegedly violated by the respondent and the underlying facts pertinent to the alleged violations; proposes a civil penalty; and provides information regarding the time, form, and manner whereby the respondent could pay, contest, or otherwise seek resolution of the claim. Prior to 2005, the Rules of Practice were silent on whether payment of the proposed civil penalty in response to the NOC, or at a subsequent stage of the proceeding, constituted an admission of the violations alleged in the NOC.

The 2005 revision of the Rules of Practice added a new § 386.18 titled ''Payment of the claim.'' That section provided that payment of the full amount claimed may be made at any time before issuance of a Final Agency Order. After the issuance of a Final Agency Order, claims are subject to interest, penalties, and administrative charges in accordance with 31 U.S.C. 3717; 49 CFR part 89; and 31 CFR 901.9. If respondent elects to pay the full amount as its response to the Notice of Claim, payment must be served upon the Field Administrator at the Service Center designated in the Notice of Claim within 30 days following service of the Notice of Claim. No written reply is necessary if respondent elects the payment option during the 30-day reply period. Failure to serve full payment within 30 days of service of the Notice of Claim when this option has been chosen may constitute a default and may result in the Notice of Claim, including the civil penalty assessed by the Notice of Claim, becoming the Final Agency Order in the proceeding pursuant to § 386.14(c). Unless objected to in writing, submitted at the time of payment, payment of the full amount in response to the Notice of Claim constitutes an admission by the respondent of all facts alleged in the Notice of Claim. Payment waives respondent's opportunity to further contest the claim, and will result in the Notice of Claim becoming the Final Agency Order.

In a small number of enforcement proceedings, respondents paid the full amount of the claim with written objection, either in their reply to the NOC or at a later stage of the proceeding. In such cases, the respondents argued that payment with written objection terminated the proceeding without an admission of liability. The FMCSA Field Administrators, who were responsible for prosecuting enforcement proceedings before the Agency, contended that respondents could not unilaterally terminate an enforcement proceeding by making full payment without an admission of liability.

In a case decided on November 3, 2010, *In the Matter of Homax Oil Sales, Inc.,* Docket No. FMCSA–2006–26000, Order Denying Petition for Reconsideration (*Homax*), FMCSA's Assistant Administrator reasoned that allowing respondents to unilaterally terminate proceedings by paying the proposed penalty in full and lodging an objection under § 386.18(c) was inconsistent with the Agency's enforcement policy and section 222 of the Motor Carrier Safety Improvement Act (MCSIA), which requires that the Agency assess the maximum statutory penalty for each violation of law by any person ''who is found to have committed a pattern of violations of critical or acute regulations issued to carry out such a law or to have previously committed the same or related violation of critical or acute regulations issued to carry out such a law.'' The Assistant Administrator concluded that if a carrier was allowed to unilaterally terminate an enforcement proceeding without an admission, the case could not count as prior history for future civil penalty calculations under section 222 of MCSIA or under 49 U.S.C. 521(b)(2)(D), which requires the Agency to consider, among other things, a respondent's history of prior offenses. Allowing unilateral termination of a proceeding by a respondent without an admission would permit carriers with abundant financial resources to repeatedly violate the Agency's regulations without facing escalating civil penalties despite a history of noncompliance with the regulations. The Assistant Administrator acknowledged that the regulatory text of § 386.18(c) was less than clear regarding the consequences of full payment with written objection and recommended that the meaning of the paragraph be clarified through rulemaking.

As was noted in *Homax,* in an April 1996 Notice of Proposed Rulemaking (NPRM), FHWA proposed the following language with respect to the full payment issue: ''Unless otherwise provided in writing by mutual consent of the parties, payment and/or

compliance with the order constitutes an admission of all facts alleged in the notice of violation [called a Notice of Claim under the current Rules of Practice] and a waiver of the respondent's opportunity to contest the claim, and results in the notice of violation becoming the final agency order.'' (61 FR 18865, Apr. 29, 1996)

FHWA's reasoning for this language was that ''future agency enforcement actions may be based on, and certain consequences may flow from, prior and continued violations of the safety regulations.'' (61 FR 18875–76, Apr. 29, 1996)

FMCSA revised this proposal, renumbered as § 386.18(c), in an October 2004 Supplemental Notice of Proposed Rulemaking (SNPRM) (69 FR 61628, Oct. 20, 2004) to read as follows: ''Unless objected to in writing, payment of the full amount in its reply constitutes an admission by the respondent of all facts alleged in the notice of claim. Payment waives respondent's opportunity to further contest the claim, and will result in the notice of claim becoming the final agency order.''

This proposed change was intended to make ''it clear that, unless the parties otherwise agree in writing, respondent's payment of the full claim amount as its reply to the notice of claim constitutes an admission.'' (69 FR 61622)

The final rule published on May 18, 2005 (70 FR 28467), adopted that provision with little change. In the 2010 *Homax* Order, the Assistant Administrator concluded that, notwithstanding the removal of the language requiring mutual consent of the parties from the regulatory text, the preamble of the rule showed that the Agency intended to adopt the mutual consent requirement originally proposed in 1996.

In a subsequent case, *In the Matter of Associated Pipe Contractors, Inc.,* Docket No. FMCSA–2008–0159, Order Terminating Proceeding and Closing Docket, January 10, 2011, the Agency addressed the implications of full payment of the proposed civil penalty at any time before issuance of a Final Agency Order, in accordance with 49 CFR 386.18(a). In *Associated Pipe Contractors,* the carrier paid the full penalty with written objection several months after contesting the NOC and requesting administrative adjudication. Section 386.18(a), which applied to this situation rather than Section 386.18(c), was silent regarding whether a carrier could unilaterally terminate an enforcement proceeding without an admission of liability under those circumstances. The Agency concluded that the same concerns expressed in the *Homax* decision apply to such a payment and that § 386.18(a) should be clarified to be consistent with that decision.

To address these concerns, therefore, FMCSA proposed to revise its Rules of Practice by amending 49 CFR 386.18(a) and (c) to clarify that payment of the full amount of the proposed civil penalty constitutes an admission of all facts alleged in the NOC, unless otherwise agreed by the parties.

B. Section 386.73

FMCSA discovered that a number of motor carriers have submitted new applications for registration, often under a new name, in order to continue operating after having been placed out of service for safety-related reasons; to avoid paying civil penalties; to circumvent denial of applications for operating authority based on a determination that they were not fit, willing, or able to comply with the applicable statutes or regulations; or to otherwise avoid a negative compliance history. Other motor carriers attempt to avoid enforcement or other consequences associated with a negative compliance history by creating or using an affiliated company under common operational control. They then shift customers, vehicles, drivers, and other operational activities to that affiliated company when FMCSA places one of the commonly controlled companies out of service. The practice of ''reincarnating'' as a new carrier or of operating affiliated companies to circumvent Agency enforcement actions and avoid a negative compliance history or enforcement action has created an unacceptable risk of harm to the public because it results in the continued operation of at-risk carriers and thwarts FMCSA's ability to carry out its safety mission.

The danger posed by ''reincarnation'' became evident following a fatal bus crash in Sherman, Texas in 2008. Investigation revealed that the motor carrier involved did not have operating authority from FMCSA. Instead, it had an application for authority pending with the Agency, but was a reincarnation of another bus company that FMCSA had recently placed out of service. Following the Sherman, Texas bus crash, FMCSA began a vetting process that involves a comprehensive review of applications for passenger carrier and household goods operating authority to determine whether the applicants are reincarnations or affiliates of other motor carriers with negative compliance histories or are otherwise not fit, willing, and able to comply with the applicable regulations. Although the vetting program is a significant improvement to the operating authority review process, it is not a complete solution to the reincarnation problem. Accordingly, in this rule FMCSA establishes new procedures to prohibit reincarnated or affiliated carriers from successfully evading accountability for their compliance history.

FMCSA is authorized to suspend, amend, or revoke a motor carrier's registration for willful failure to comply with applicable safety regulations, an FMCSA order, or a condition of its registration pursuant to 49 U.S.C. 13905. Motor carriers that obtain registration by creating a new company or an affiliate company for the purpose of avoiding FMCSA orders, regulations, or enforcement actions procure the registration by fraud—by knowingly misrepresenting and/or withholding material information. FMCSA has authority to sanction these motor carriers, which have already demonstrated an unwillingness or inability to comply with applicable safety regulations, by suspending, amending, or revoking their registration and/or by imposing applicable civil penalties.

To address these challenges, FMCSA proposed to revise its Rules of Practice by adding new section 386.73. This section authorizes FMCSA to issue out-of-service orders to motor carriers, intermodal equipment providers, brokers, and, freight forwarders determined to be reincarnated or operating as affiliates to avoid enforcement action or a negative compliance history, and it would provide a mechanism for administrative review of such orders. The rule would also establish procedures to consolidate the compliance records of reincarnated or affiliated entities. These procedures more fully implement the Agency's current authority to prohibit unsafe entities from operating while, at the same time, providing due process for companies that seek to challenge a finding that they are reincarnated.

IV. Discussion of Comments

FMCSA received seven comments in response to the NPRM (76 FR 77458, Dec. 13, 2011). The commenters included a highway safety advocacy organization, a transportation consultant, and associations representing third party logistics professionals, moving and storage companies, explosives manufacturers and distributors, trucking companies, and independent owner operators.

Overall, most commenters supported FMCSA's objectives for changing its rules of practice. Several commenters expressed concerns with the Agency's proposal regarding the payment of claims. A couple of commenters strongly supported the proposed provisions for ''reincarnated carriers.'' These comments are discussed in greater detail below.

A. Comments to Section 386.18

Comments

The Agency received three comments in response to its proposal to amend 49 CFR 386.18(a) and (c) to clarify that full payment of a proposed civil penalty at any stage of an enforcement proceeding will be considered an admission of liability, unless the parties otherwise agree in writing. The Owner-Operator Independent Drivers Association (OOIDA) supported this proposal, stating that ''[t]he proposed modification shifts the focus back to safety, and does so while affording full due process to those responding to claims.'' OOIDA noted, however, that the elimination of a ''*nolo contendre* plea option (payment without admitting guilt)'' would likely increase the number of negotiated or litigated claims and require additional Agency resources to handle this increase.

The American Trucking Associations, Inc. (ATA) had reservations about, and the American Moving and Storage Association (AMSA) opposed, the proposed amendments to § 386.18. Although ATA stated that it generally agrees with the safety objectives underlying the proposal, it believes that the proposal would result in a ''reversal of the increased efficiency in enforcement procedures that [the] Rules of Practice were intended to achieve'' and divert FMCSA enforcement resources from high-risk carriers. ATA also urges that FMCSA establish a clear and reasonable policy directing Agency officials to agree to settlements of enforcement claims without admissions of guilt in appropriate cases where there is not likely to be a significantly deleterious effect on public safety. AMSA believes that the proposal, by eliminating the *nolo contendre* plea option, is unfair to innocent carriers that make a business decision to pay the penalty in order to resolve a case in the most cost-efficient manner. AMSA also believes that the proposal may result in an increased burden on FMCSA resources because carriers are less likely to settle cases where an admission of liability could result in civil litigation or personal injury suits arising out of the admitted violations.

FMCSA Response

The FMCSA is committed to the expeditious resolution of enforcement proceedings, and continues to believe that allowing unilateral termination of such proceedings without an admission of liability conflicts with important Agency policies and statutory mandates designed to hold carriers accountable for regulatory violations when calculating penalties in potential future enforcement cases. This is particularly important in the context of maximum civil penalty cases subject to section 222 of MCSIA. The Agency's policy statements regarding implementation of section 222 have stated that in order for maximum penalties to be assessed under that section based on previously closed enforcement cases, the violations in those cases must have been adjudicated or admitted.[1]

Thus, allowing a respondent to terminate a proceeding without either an adjudication or admission would permit a carrier with abundant financial resources to repeatedly violate the regulations without running the risk of being penalized as a repeat offender, either for purposes of applying section 222 of MCSIA or calculating the appropriate penalty under 49 U.S.C. 521(b)(2)(D), which requires the Agency to consider, among other things, the respondent's history of prior offenses. This not only impedes the Agency's ability to implement important statutory mandates, but also gives an unfair advantage to those carriers with greater financial resources, who may be tempted to treat civil penalties as merely a cost of doing business.

In 2011, the year following the *Homax* decision, the number of cases resolved through payment of the penalty in full increased more than 85% over the previous year.[2] In contrast, carriers have resisted admissions of liability by making full payment of the civil penalty with written objection in only a handful of cases. Consequently, we do not anticipate a significant increase in the number of contested cases coming before the Agency as a result of the modifications to § 386.18 and believe that ATA's and AMSA's concerns about diversion of agency resources from high-risk carriers are unwarranted. Even if these modifications result in a small increase in the Agency's enforcement case backlog, enhancing motor carrier safety by holding repeat offenders accountable is more important than maintaining a potentially slightly reduced docket of administrative adjudications.

The Agency disagrees with AMSA that the proposal adopts a ''bit of a guilty-until-proven innocent approach * * *.'' Innocent carriers will continue to have the opportunity to contest the allegations in the NOC in accordance with the procedures established in the Agency's Rules of Practice. The FMCSA enforcement program and counsel will continue to have the burden of proving any contested allegations. Although in some circumstances a motor carrier may decide it is less expensive to settle a case than to contest a NOC, that is a business decision, and the carrier's desire to avoid future consequences of the settlement should not take precedence over the need to protect the public against potentially unsafe carriers and to comply with statutory mandates.

In response to ATA's request that FMCSA establish clear and reasonable policies governing the circumstances under which the Agency will settle enforcement claims without requiring an admission of guilt, FMCSA may establish internal policies that will identify appropriate cases that may be settled without including an admission of liability in the Settlement Agreement.

B. Comments to Section 386.73 Carrier Intent

Comment

Advocates for Highway and Auto Safety (Advocates) disagrees with proposed § 386.73(c)(1), which requires FMCSA to consider whether the new or affiliated entity was created for the purpose of evading statutory, regulatory, or other legal requirements. Advocates propose that FMCSA consider only the results of the carrier's conduct without regard to the carrier's intent or motivation behind the conduct. Advocates believe that requiring consideration of motivation and intent could unreasonably burden the Agency's evaluation of the factors in § 386.73(c) because proving intent is difficult and the same activity can be ambiguous if intent must be considered. Advocates suggests, therefore, that the agency eliminate the wording ''for the purpose of'' from the language proposed for § 386.73(c)(1), and replace it with the phrase ''and has resulted in the evasion of'' in referencing the creation of an affiliate that was involved in evading the law.

ATA, on the other hand, supports FMCSA's inclusion of a motor carrier's

[1] *See* 69 FR 77828, 77829, Dec. 24, 2004; 74 FR 14184, 14185, Mar. 30, 2009.

[2] Enforcement data show that 3,237 civil penalty cases were resolved by payment in full without a settlement agreement in 2011, compared to 1,741 such cases in 2010. Approximately 400 more Notices of Claim were issued in 2011 than in 2010.

intent or motivation as a factor for FMCSA to consider when determining whether a motor carrier attempted to avoid a statutory or regulatory requirement. ATA requests, however, that FMCSA weight the factors listed in § 386.73(c), with the first factor concerning the motor carrier's intent being weighted the heaviest.

FMCSA Response

A motor carrier's intent behind a particular course of conduct should be relevant if it shows an attempt to avoid compliance with applicable regulations or the consequences of past violations. A motor carrier would not, however, be able to avoid liability merely by asserting it had some legitimate business purpose for the corporate transaction or affiliate structure. Under the final rule, FMCSA will evaluate the motor carrier's stated purpose in light of all the available evidence and by considering each of the 13 factors identified in § 386.73(c). If the totality of the available information demonstrates that the carrier's stated business purpose is consistent with the evidence, then the motor carrier would not be subject to an out-of-service order and/or record consolidation order. Conversely, if the totality of the available information demonstrates that the carrier's stated purpose is inconsistent with the evidence, then the motor carrier would be subject to an out-of-service order and/or record consolidation order.

FMCSA does not take lightly its authority to place a motor carrier's operations out of service, and the Agency recognizes that such orders pose a significant penalty. Accordingly, FMCSA intends to apply § 386.73 to those motor carriers that engage in egregious instances of noncompliance and evasion. Advocates' proposed modification (removing consideration of intent) is contrary to the intent of the rule, that is, to ensure that carriers that form a new company to purposely evade regulation are identified and put out of service. FMCSA is authorized to establish such a standard but declines to exert its regulatory authority in this manner. ATA's proposed modification (weighting the factors, with intent being weighted the heaviest) could result in a rigid application of the rule and require FMCSA to disregard relevant evidence that a motor carrier attempted to avoid a statutory or regulatory requirement. For these reasons, FMCSA declines to modify the § 386.73 as proposed by either Advocates or ATA.

Comment

IME expressed concerns over how the factors listed in § 386.73(c) and (d) will be applied. IME noted that some of its members operate multiple fleets that have common ownership, but are considered to be separate entities. IME further notes that these motor carriers may engage in one or even all of the activities described in § 386.73(c)(3) through (13). IME requests that FMCSA explain the circumstances under which the factors contained in § 386.73(c) and (d) will be applied.

FMCSA Response

A motor carrier would not be subject to an out-of-service order under § 386.73 unless the motor carrier created or attempted to create a new identity or affiliate relationship for the purpose of avoiding a statutory or regulatory requirement or FMCSA enforcement action. Motor carriers who change their operational model for a legitimate business purpose and not to avoid FMCSA regulation or enforcement would not be affected by this rule. Section 386.73(c) describes the factors FMCSA will evaluate to determine whether a motor carrier created or attempted to create a new identity or affiliate relationship to avoid FMCSA regulation or enforcement. Section 386.73(d) describes the potential sources of information FMCSA may use to make its determination. FMCSA's determination will be based on consideration of all relevant information, and one factor or potential source of evidence is not necessarily more significant than another. Where the greater weight of the evidence shows that a motor carrier created a new identity or shifted its operations to another, commonly owned and controlled, entity to avoid FMCSA authority or negative safety performance history, the motor carrier will be placed out of service and/or have its records consolidated with the records of the preexisting or affiliated entity.

FMCSA modified § 386.73(c)(13), now 386.73(c)(2), to clarify that the safety performance history FMCSA will consider to determine whether a motor carrier created a new identity or affiliate relationship to avoid FMCSA enforcement is the past safety performance history of the original motor carrier. FMCSA also modified § 386.73(d) to clarify that FMCSA will consider all information relevant to the motor carrier operations and the factors identified in § 386.73(c). The original rule text provided that FMCSA would consider information related to the motor carrier's operations, but did not reference information that might be relevant to the factors in § 386.73(c). FMCSA corrected this by clarifying that FMCSA will consider all information relevant to the motor carrier's operations and the factors in § 386.73(c).

Comment

The Transportation Intermediaries Association (TIA) supports FMCSA's efforts to target motor carriers who attempt to avoid statutory or regulatory requirements. TIA suggests, however, that FMCSA implement a timely administrative review process and place carriers in a probation status pending the administrative review.

FMCSA Response

Section 386.73(g) describes the administrative review procedures available to motor carriers served with an operations-out-of service or record consolidation order. In reviewing TIA's comment, FMCSA determined that administrative review procedure should be clarified by adding language to explain when an out-of-service order or record consolidation order is effective. FMCSA modified the rule accordingly. The administrative review procedure is explained below.

Under § 386.73(g), an order is effective 21 days after it is served, unless the motor carrier requests administrative review within 15 days of service of the order. If the motor carrier fails to request administrative review, or requests administrative review after the 15-day period, the motor carrier must cease operations and its records may be consolidated. If the motor carrier requests administrative review within 15 days, however, the order is automatically stayed and the motor carrier may continue operating and its records will not be consolidated during the period of administrative review. The Agency Official may file a motion with the Assistant Administrator to vacate the automatic stay. The motion must be served on the motor carrier who may respond in opposition the motion within 15 days. The Assistant Administrator may grant the motion only if he or she finds good cause to vacate the stay.

The administrative review procedures ensure motor carriers receive notice of FMCSA's intended action and have a fair opportunity to be heard. The procedures also ensure that FMCSA can efficiently and expeditiously address motor carriers that attempt to avoid FMCSA authority or enforcement action. Accordingly, FMCSA declines to establish a ''probation'' status for motor carriers who are permitted to operate

during the administrative review process.

Operating Authority

Comment

TIA recommends that every licensed company (broker, forwarder, and carrier) be required to re-register its operating authority annually and that failure to comply with this requirement should result in cancellation of the company's authority. The commenter asserts that Congress is considering legislation supported by TIA, ATA, and OOIDA that would tie continuation of authority to an existing requirement, either the Unified Carrier Registration Agreement or the Unified Registration System (URS).

FMCSA Response

TIA's suggested annual registration recommendation is beyond the scope of this rulemaking, which does not involve the DOT registration process. The Agency has a rulemaking proceeding in progress regarding the DOT registration process, under Docket No. FMCSA–97–2349, which proposes to replace certain existing DOT registration systems with a new URS. TIA submitted comments in that proceeding on December 20, 2011, in which it made similar recommendations. TIA's comments on this issue, therefore, will be addressed in the URS rulemaking proceeding.

Statutory Authority

Comment

ATA recommends that the Agency wait for more specific statutory authority before finalizing § 386.73.

FMCSA Response

FMCSA does not require additional statutory authority to establish this new section. As stated in the ''Legal Basis for the Rulemaking'' section of the rule, FMCSA has statutory authority to prescribe regulations ensuring that CMVs are operated safely and to determine whether an owner or operator is fit to operate a CMV safely. Section 386.73 of the Agency's Rules of Practice is issued under that rulemaking authority and lays out procedures for placing out of service and/or consolidating the safety records of carriers that avoid FMCSA's regulations.

Comment

Advocates suggests that FMCSA impose criminal sanctions on reincarnated motor carriers engaging in fraud and evading regulation as part of this regulatory initiative.

FMCSA Response

Advocates note that criminal sanctions against reincarnated carriers cannot be sought as part of an administrative proceeding. Because Part 386 applies only to administrative proceedings, this comment is outside the scope of this rulemaking. In any event, FMCSA does not currently have the statutory authority to independently seek criminal sanctions, but will continue to cooperate with both State and Federal law enforcement partners in seeking criminal penalties against unsafe carriers where appropriate.

Out of Scope

Comment

OOIDA requested that a subsection (6) be added to the proposed § 386.73(b), which describes when record consolidation is appropriate, to require consolidation when new or affiliated entities are registered primarily to ''[a]void paying liabilities owed to creditors, including but not limited to the parties actually providing transportation services.'' OOIDA requested that FMCSA add this subsection to protect its members from carriers that reincarnate to escape financial obligations to drivers. This change is outside the scope of the current rulemaking, which is focused on safety rather than financial regulation. Our current legal authority does not provide for determinations of the legal rights between third parties in payment disputes.

TIA suggests that FMCSA should apply § 386.73 to ''broker trust fund providers'' as well as motor carriers, intermodal equipment providers, brokers and freight forwarders. This comment is outside the scope of the current rulemaking, which is focused on safety rather than financial regulation. Moreover, FMCSA has no jurisdiction over broker trust fund providers.

IME suggests that FMCSA focus its efforts on correcting problems in existing programs, rather than proceeding with this rule. IME suggests FMCSA address its petition regarding the Hazardous Materials Safety Permit Program (HMSP), which it states is directly affected by the proposed rulemaking. This comment is outside the scope of the current rulemaking. But FMCSA is planning to address the HMSP in a future rulemaking, as stated in FMCSA's response to IME's petition in that matter.

OOIDA commented that FMCSA's DataQ dispute resolution process does not afford due process to carriers and drivers. DataQ's is the process by which carriers may challenge the accuracy of enforcement data uploaded into the Agency's information systems (e.g., does the report accurately identify the carrier, driver and vehicle and date and location of the intervention). OOIDA's comments regarding the DataQ dispute resolution process are outside the scope of this section of the rulemaking, which is limited to the notice of claim resolution process.

C. Small Business Impact

Comment

North American Transportation Consultants, Inc. (NATC) believes the analysis presented in the NPRM concerning the impact that all aspects of the rule would have on small businesses did not take into consideration the difficulties small businesses encounter in being able to afford legal counsel to provide protection of their rights.

FMCSA Response

First, as mentioned in the Regulatory Flexibility Act section, only six carriers paid a civil penalty with a written objection from 2008 thru 2011, indicating a minimal economic impact that would arise from changes to § 386.18 (a) and (c). Second, the regulatory changes adopted here do not significantly alter the position of small businesses. This is a procedural rule that would not affect entities already in compliance, or those that are out of compliance but do not attempt to avoid the consequences of non-compliance by reincarnating as a new or affiliated entity.

Although small businesses are entitled to retain legal representation during enforcement proceedings initiated under 49 CFR part 386, in most cases they choose to represent themselves. The changes do not increase the burden on motor carriers with respect to their options concerning legal representation.

V. Discussion of Rule

This rule amends regulations in 49 CFR part 386 pertaining to administrative practices and procedures and civil penalties. FMCSA adopts the language from the NPRM into the final rule with additional clarifying language to § 386.73(c) and (d).

FMCSA added language to § 386.73 (g)(8) to clarify the administrative review procedure regarding the Assistant Administrator's authority to vacate the automatic stay of any order issued under § 386.73.

VI. Regulatory Analyses

Executive Order (E.O.) 12866 (Regulatory Planning and Review) and DOT Regulatory Policies and Procedures

FMCSA has determined that this rule is not a significant regulatory action within the meaning of Executive Order (E.O.) 12866, as supplemented by E.O. 13563 (76 FR 3821, January 21, 2011), or within the meaning of DOT regulatory policies and procedures. The estimated cost of the rule is not expected to exceed the $100 million annual threshold for economic significance; any costs associated with the rule are expected to be minimal. Moreover, the Agency does not expect the rule to generate substantial congressional or public interest. The rule would not impose new requirements upon carriers and thus should result in minimal or no economic burdens. The revisions clarify existing rules and implement procedures that would not require a change in the business practices of already compliant motor carriers.

Regulatory Flexibility Act

The Regulatory Flexibility Act of 1980 (5 U.S.C. 601–612) requires Federal agencies to consider the effects of the regulatory action on small business and other small entities and to minimize any significant economic impact. The term ''small entities'' includes small businesses and not-for-profit organizations that are independently owned and operated and are not dominant in their fields, and governmental jurisdictions with populations of less than 50,000.[3] Accordingly, the DOT policy titled, ''Proper Consideration of Small Entities in Agency Rulemaking'' requires an analysis of the impact of all regulations on small entities and mandates that agencies strive to lessen any adverse effects on these businesses.

Under the Regulatory Flexibility Act, as amended by the Small Business Regulatory Enforcement Fairness Act of 1996 (Pub. L. 104–121, 110 Stat. 857), this rule is not expected to have a significant economic impact on a substantial number of small entities. The rule's clarification of how payment of claims affects admissions of liability reflects current FMCSA policy, as discussed in the background section. Even before the current policy was enunciated through administrative adjudication, this portion of the rule did not have a significant impact. From 2008 through 2011, the Agency adjudicated only six cases in which the respondent motor carrier paid a civil penalty with written objection, which indicates the minimal impact the rule is expected to have.

FMCSA estimates that fewer than 50 carriers annually will be affected and placed out of service by the rule as it pertains to reincarnated or affiliated carriers, from data provided by the U.S. General Accountability Office (GAO) Engagement Report (June 2008–July 2011).[4] Therefore, this rule would not disproportionately impact small entities. Consequently, I certify that a regulatory flexibility analysis is not necessary.

Assistance for Small Entities

In accordance with section 213(a) of the Small Business Regulatory Enforcement Fairness Act of 1996, FMCSA wants to assist small entities in understanding this rule so that they can better evaluate its effects on them. If the rule affects your small business, organization, or governmental jurisdiction and you have questions concerning its provisions or options for compliance, please consult the FMCSA point of contact, Sabrina Redd, listed in the **FOR FURTHER INFORMATION CONTACT** section of this rule.

Small businesses may send comments on the actions of Federal employees who enforce or otherwise determine compliance with Federal regulations to the Small Business Administration's Small Business and Agriculture Regulatory Enforcement Ombudsman and the Regional Small Business Regulatory Fairness Boards. The Ombudsman evaluates these actions annually and rates each agency's responsiveness to small business. If you wish to comment on actions by employees of FMCSA, call 1–888–REG–FAIR (1–888–734–3247). FMCSA will not retaliate against small entities that question or complain about this rule or any policy or action of the Agency.

Unfunded Mandates Reform Act

This rule will not impose an unfunded Federal mandate, as defined by the Unfunded Mandates Reform Act of 1995 (2 U.S.C. 1532 *et seq.*), that would result in the expenditure by State, local, and tribal governments, in the aggregate, or by the private sector, of $141.3 million (which is the value of $100 million in 2010 after adjusting for inflation) or more in any 1 year.

E.O. 13132 (Federalism)

A rule has implications for Federalism under Section 1(a) of E.O. 13132 if it has ''substantial direct effects on the States, on the relationship between the national government and the States, or on the distribution of power and responsibilities among the various levels of government.'' FMCSA has determined that this rule will not have substantial direct effects on States, nor would it limit the policymaking discretion of States. Nothing in this document preempts any State law or regulation.

Indian Tribal Governments

This rule does not have tribal implications under E.O. 13175, Consultation and Coordination with Indian Tribal Governments, because it does not have a substantial direct effect on one or more Indian tribes, on the relationship between the Federal Government and Indian tribes, or on the distribution of power and responsibilities between the Federal Government and Indian tribes.

Paperwork Reduction Act

Under the Paperwork Reduction Act of 1995 (44 U.S.C. 3501 et seq.), Federal agencies must obtain approval from the Office of Management and Budget (OMB) for each collection of information they conduct, sponsor, or require through regulations. FMCSA has determined that there is no new information collection requirement associated with this rule.

National Environmental Policy Act

FMCSA analyzed this rule for the purpose of the National Environmental Policy Act of 1969 (42 U.S.C. 4321 *et seq.*) and determined this action is categorically excluded from further analysis and documentation in an environmental assessment or environmental impact statement under FMCSA Order 5610.1 (69 FR 9680, March 1, 2004), Appendix 2, paragraphs (6)(u)(1), (6)(u)(2), and (6)(y)(7). The Categorical Exclusion (CE) in paragraph (6)(u)(1) addresses rules concerning compliance with regulations; the CE in paragraph (6)(u)(2) addresses regulations concerning civil penalties; and the CE in paragraph (6)(y)(7) addresses rules for record keeping. The various changes in this rule are covered by one or a combination of these three CEs. Therefore, this action does not have any effect on the quality of the environment. The Categorical Exclusion determination is available for inspection or copying in the *Regulations.gov* Web site listed under **ADDRESSES.**

[3] Regulatory Flexibility Act (5 U.S.C. 601 *et seq.*) see National Archives at *http://www.archives.gov/federal-register/laws/regulatory-flexibility/601.html.*

[4] FMCSA Eastern Service Center/Division Field Enforcement Action—Reincarnated Carrier Cases—GAO Engagement 541079 July 1, 2011.

FMCSA also analyzed this rule under the Clean Air Act, as amended (CAA), section 176(c) (42 U.S.C. 7401 *et seq.*), and implementing regulations promulgated by the Environmental Protection Agency. Approval of this action is exempt from the CAA's general conformity requirement since it does not affect direct or indirect emissions of criteria pollutants.

E.O. 13211 (Energy Effects)

FMCSA analyzed this rule under E.O. 13211, Actions Concerning Regulations That Significantly Affect Energy Supply, Distribution, or Use. The Agency has determined that it is not a ''significant energy action'' under that order because it is not a ''significant regulatory action'' under E.O. 12866 and is not likely to have a significant adverse effect on the supply, distribution, or use of energy. Therefore, no Statement of Energy Effects is required.

E.O. 13045 (Protection of Children)

E.O. 13045, Protection of Children from Environmental Health Risks and Safety Risks (62 FR 19885, Apr. 23, 1997), requires agencies issuing ''economically significant'' rules, if the regulation also concerns an environmental health or safety risk that an agency has reason to believe may disproportionately affect children, to include an evaluation of the regulation's environmental health and safety effects on children. As discussed previously, this rule is not economically significant. Therefore, no analysis of the impacts on children is required. In any event, we do not anticipate that this regulatory action could in any respect present an environmental or safety risk that could disproportionately affect children.

E.O. 12988 (Civil Justice Reform)

This action meets applicable standards in sections 3(a) and 3(b)(2) of E.O. 12988, Civil Justice Reform, to minimize litigation, eliminate ambiguity, and reduce burden.

E.O. 12630 (Taking of Private Property)

This rule would not effect a taking of private property or otherwise have taking implications under E.O. 12630, Governmental Actions and Interference with Constitutionally Protected Property Rights.

National Technology Transfer and Advancement Act (Technical Standards)

The National Technology Transfer and Advancement Act (15 U.S.C. 272 note) directs agencies to use voluntary consensus standards in their regulatory activities unless the agency provides Congress, through OMB, with an explanation of why using these standards would be inconsistent with applicable law or otherwise impractical. Voluntary consensus standards are technical standards (e.g., specifications of materials, performance, design, or operation; test methods; sampling procedures; and related management systems practices) that are developed or adopted by voluntary consensus standards bodies.

FMCSA is not aware of any technical standards used to address Agency rules of practice by motor carriers, intermodal equipment providers, brokers, freight forwarders, and handlers of hazardous materials and therefore, did not consider any such standards.

Privacy Impact Assessment

FMCSA conducted a privacy impact assessment of this rule as required by section 522(a)(5) of the FY 2005 Omnibus Appropriations Act, Public Law 108–447, 118 Stat. 3268 (Dec. 8, 2004) [set out as a note to 5 U.S.C. 552a]. The assessment considers any impacts of the rule on the privacy of information in an identifiable form and related matters. FMCSA has determined this rule would have no privacy impacts.

List of Subjects in 49 CFR Part 386

Administrative practice and procedure, Brokers, Freight forwarders, Hazardous materials transportation, Highway safety, Motor carriers, Motor vehicle safety penalties.

For the reasons discussed in the preamble, FMCSA amends 49 CFR part 386 as follows:

PART 386—RULES OF PRACTICE FOR MOTOR CARRIER, INTERMODAL EQUIPMENT PROVIDER, BROKER, FREIGHT FORWARDER, AND HAZARDOUS MATERIALS PROCEEDINGS

■ 1. The authority citation for part 386 continues to read as follows:

Authority: 49 U.S.C. 113, chapters 5, 51, 59, 131–141, 145–149, 311, 313, and 315; Sec. 204, Pub. L. 104–88, 109 Stat. 803, 941 (49 U.S.C. 701 note); Sec. 217, Pub. L. 105–159, 113 Stat. 1748, 1767; Sec. 206, Pub. L. 106–159, 113 Stat. 1763; subtitle B, title IV of Pub. L. 109–59; and 49 CFR 1.45 and 1.73.

■ 2. Amend § 386.18 by revising paragraphs (a) and (c) to read as follows:

§ 386.18 Payment of the claim.

(a) Payment of the full amount claimed may be made at any time before issuance of a Final Agency Order and will constitute an admission of liability by the respondent of all facts alleged in the Notice of Claim, unless the parties agree in writing that payment shall not be treated as an admission. After the issuance of a Final Agency Order, claims are subject to interest, penalties, and administrative charges, in accordance with 31 U.S.C. 3717; 49 CFR part 89; and 31 CFR 901.9.

* * * * *

(c) Unless otherwise agreed in writing by the parties, payment of the full amount in response to the Notice of Claim constitutes an admission of liability by the respondent of all facts alleged in the Notice of Claim. Payment waives respondent's opportunity to further contest the claim and will result in the Notice of Claim becoming the Final Agency Order.

■ 3. Add § 386.73 to subpart F to read as follows:

§ 386.73 Operations out of service and record consolidation proceedings (reincarnated carriers).

(a) *Out-of-service order.* An FMCSA Field Administrator or the Director of FMCSA's Office of Enforcement and Compliance (Director) may issue an out-of-service order to prohibit a motor carrier, intermodal equipment provider, broker, or freight forwarder from conducting operations subject to FMCSA jurisdiction upon a determination by the Field Administrator or Director that the motor carrier, intermodal equipment provider, broker, or freight forwarder or an officer, employee, agent, or authorized representative of such an entity, operated or attempted to operate a motor carrier, intermodal equipment provider, broker, or freight forwarder under a new identity or as an affiliated entity to:

(1) Avoid complying with an FMCSA order;

(2) Avoid complying with a statutory or regulatory requirement;

(3) Avoid paying a civil penalty;

(4) Avoid responding to an enforcement action; or

(5) Avoid being linked with a negative compliance history.

(b) *Record consolidation order.* In addition to, or in lieu of, an out-of-service order issued under this section, the Field Administrator or Director may issue an order consolidating the records maintained by FMCSA concerning the current motor carrier, intermodal equipment provider, broker, and freight forwarder and its affiliated motor carrier, intermodal equipment provider, broker, or freight forwarder or its previous incarnation, for all purposes, upon a determination that the motor carrier, intermodal equipment provider, broker, and freight forwarder or officer,

employee, agent, or authorized representative of the same, operated or attempted to operate a motor carrier, intermodal equipment provider, broker, or freight forwarder under a new identity or as an affiliated entity to:

(1) Avoid complying with an FMCSA order;

(2) Avoid complying with a statutory or regulatory requirement;

(3) Avoid paying a civil penalty;

(4) Avoid responding to an enforcement action; or

(5) Avoid being linked with a negative compliance history.

(c) *Standard.* The Field Administrator or Director may determine that a motor carrier, intermodal equipment provider, broker, or freight forwarder is reincarnated if there is substantial continuity between the entities such that one is merely a continuation of the other. The Field Administrator or Director may determine that a motor carrier, intermodal equipment provider, broker, or freight forwarder is an affiliate if the business operations are under common ownership and/or common control. In making this determination, the Field Administrator or Director may consider, among other things, the following factors:

(1) Whether the new or affiliated entity was created for the purpose of evading statutory or regulatory requirements, an FMCSA order, enforcement action, or negative compliance history. In weighing this factor, the Field Administrator or Director may consider the stated business purpose for the creation of the new or affiliated entity.

(2) The previous entity's safety performance history, including, among other things, safety violations and enforcement actions of the Secretary, if any;

(3) Consideration exchanged for assets purchased or transferred;

(4) Dates of company creation and dissolution or cessation of operations;

(5) Commonality of ownership between the current and former company or between current companies;

(6) Commonality of officers and management personnel;

(7) Identity of physical or mailing addresses, telephone, fax numbers, or email addresses;

(8) Identity of motor vehicle equipment;

(9) Continuity of liability insurance policies or commonality of coverage under such policies;

(10) Commonality of drivers and other employees;

(11) Continuation of carrier facilities and other physical assets;

(12) Continuity or commonality of nature and scope of operations, including customers for whom transportation is provided;

(13) Advertising, corporate name, or other acts through which the company holds itself out to the public;

(d) *Evaluating factors.* The Field Administrator or Director may examine, among other things, the company management structures, financial records, corporate filing records, asset purchase or transfer and title history, employee records, insurance records, and any other information related to the general operations of the entities involved and factors in paragraph (c) of this section.

(e) *Effective dates.* An order issued under this section becomes the Final Agency Order and is effective on the 21st day after it is served unless a request for administrative review is served and filed as set forth in paragraph (g) of this section. Any motor carrier, intermodal equipment provider, broker, or freight forwarder that fails to comply with any prohibition or requirement set forth in an order issued under this section is subject to the applicable penalty provisions for each instance of noncompliance.

(f) *Commencement of proceedings.* The Field Administrator or Director may commence proceedings under this section by issuing an order that:

(1) Provides notice of the factual and legal basis of the order;

(2) In the case of an out-of-service order, identifies the operations prohibited by the order;

(3) In the case of an order that consolidates records maintained by FMCSA, identifies the previous entity and current or affiliated motor carriers, intermodal equipment providers, brokers, or freight forwarders whose records will be consolidated;

(4) Provides notice that the order is effective upon the 21st day after service;

(5) Provides notice of the right to petition for administrative review of the order and that a timely petition will stay the effective date of the order unless the Assistant Administrator orders otherwise for good cause; and

(6) Provides notice that failure to timely request administrative review of the order constitutes waiver of the right to contest the order and will result in the order becoming a Final Agency Order 21 days after it is served.

(g) *Administrative review.* A motor carrier, intermodal equipment provider, broker, or freight forwarder issued an order under this section may petition for administrative review of the order. A petition for administrative review is limited to contesting factual or procedural errors in the issuance of the order under review and may not be submitted to demonstrate corrective action. A petition for administrative review that does not identify factual or procedural errors in the issuance of the order under review will be dismissed. Petitioners seeking to demonstrate corrective action may do so by submitting a Petition for Rescission under paragraph (h) of this section.

(1) A petition for administrative review must be in writing and served on the Assistant Administrator, Federal Motor Carrier Safety Administration, 1200 New Jersey Ave. SE., Washington, DC 20590–0001, Attention: Adjudications Counsel, or by electronic mail to *FMCSA.Adjudication@dot.gov*. A copy of the petition for administrative review must also be served on the Field Administrator or Director who issued the order, at the physical address or electronic mail account identified in the order.

(2) A petition for administrative review must be served within 15 days of the date the Field Administrator or Director served the order issued under this section. Failure to timely request administrative review waives the right to administrative review and constitutes an admission of the facts alleged in the order.

(3) A petition for administrative review must include:

(i) A copy of the order in dispute; and

(ii) A statement of all factual and procedural issues in dispute.

(4) If a petition for administrative review is timely served and filed, the petitioner may supplement the petition by serving documentary evidence and/or written argument that supports its position regarding the procedural or factual issues in dispute no later than 30 days from the date the disputed order was served. The supplementary documentary evidence or written argument may not expand the issues on review and need not address every issue identified in the petition. Failure to timely serve supplementary documentary evidence and/or written argument constitutes a waiver of the right to do so.

(5) The Field Administrator or Director must serve written argument and supporting documentary evidence, if any, in defense of the disputed order no later than 15 days following the period in which petitioner may serve supplemental documentary evidence and/or written argument in support of the petition for administrative review.

(6) The Assistant Administrator may ask the parties to submit additional information or attend a conference to facilitate administrative review.

(7) The Assistant Administrator will issue a written decision on the request

for administrative review within 30 days of the close of the time period for the Field Administrator or the Director to serve written argument and supporting documentary evidence in defense of the order, or the actual filing of such written argument and documentary evidence, whichever is earlier.

(8) If a petition for administrative review is timely served in accordance with this subsection, the disputed order is stayed, pending the Assistant Administrator's review. The Assistant Administrator may enter an order vacating the automatic stay in accordance with the following procedures:

(i) The Agency Official may file a motion to vacate the automatic stay demonstrating good cause why the order should not be stayed. The Agency Official's motion must be in writing, state the factual and legal basis for the motion, be accompanied by affidavits or other evidence relied on, and be served on the petitioner and Assistant Administrator.

(ii) The petitioner may file an answer in opposition, accompanied by affidavits or other evidence relied on. The answer must be served within 10 days of service of the motion.

(iii) The Assistant Administrator will issue a decision on the motion to vacate the automatic stay within 10 days of the close of the time period for serving the answer to the motion. The 30-day period for review of the petition for administrative review in paragraph (g)(5) of this section is tolled from the time the Agency Official's motion to lift a stay is served until the Assistant Administrator issues a decision on the motion.

(9) The Assistant Administrator's decision on a petition for administrative review of an order issued under this section constitutes the Final Agency Order.

(h) *Petition for rescission.* A motor carrier, intermodal equipment provider, broker, or freight forwarder may petition to rescind an order issued under this section if action has been taken to correct the deficiencies that resulted in the order.

(1) A petition for rescission must be made in writing to the Field Administrator or Director who issued the order.

(2) A petition for rescission must include a copy of the order requested to be rescinded, a factual statement identifying all corrective action taken, and copies of supporting documentation.

(3) Upon request and for good cause shown, the Field Administrator or Director may grant the petitioner additional time, not to exceed 45 days, to complete corrective action initiated at the time the petition for rescission was filed.

(4) The Field Administrator or Director will issue a written decision on the petition for rescission within 60 days of service of the petition. The written decision will include the factual and legal basis for the determination.

(5) If the Field Administrator or Director grants the request for rescission, the written decision is the Final Agency Order.

(6) If the Field Administrator or Director denies the request for rescission, the petitioner may file a petition for administrative review of the denial with the Assistant Administrator, Federal Motor Carrier Safety Administration, 1200 New Jersey Ave. SE., Washington, DC 20590–0001, Attention: Adjudication Counsel or by electronic mail to *FMCSA.Adjudication@dot.gov*. The petition for administrative review of the denial must be served and filed within 15 days of the service of the decision denying the request for recession. The petition for administrative review must identify the disputed factual or procedural issues with respect to the denial of the petition for rescission. The petition may not, however, challenge the underlying basis of the order for which rescission was sought.

(7) The Assistant Administrator will issue a written decision on the petition for administrative review of the denial of the petition for rescission within 60 days. The Assistant Administrator's decision constitutes the Final Agency Order.

(i) *Other orders unaffected.* If a motor carrier, intermodal equipment provider, broker, or freight forwarder subject to an order issued under this section is or becomes subject to any other order, prohibition, or requirement of the FMCSA, an order issued under this section is in addition to, and does not amend or supersede such other order, prohibition, or requirement. A motor carrier, intermodal equipment provider, broker, or freight forwarder subject to an order issued under this section remains subject to the suspension and revocation provisions of 49 U.S.C. 13905 for violations of regulations governing their operations.

(j) *Inapplicability of subparts.* Subparts B, C, D, and E of this part, except § 386.67, do not apply to this section.

■ 4. Amend Appendix A to part 386, section IV, by redesignating paragraph h. as paragraph i. and adding a new paragraph h. to read as follows:

Appendix A to Part 386—Penalty Schedule; Violations of Notices and Orders

* * * * *

IV. * * *

h. Violation — Operating in violation of an order issued under § 386.73. Penalty—Up to $16,000 per day the operation continues after the effective date and time of the out-of-service order.

* * * * *

Issued on: April 18, 2012.

Anne S. Ferro,

Administrator.

[FR Doc. 2012–10162 Filed 4–25–12; 8:45 am]

BILLING CODE P

Proposed Rules

Federal Register

Vol. 77, No. 81

Thursday, April 26, 2012

This section of the FEDERAL REGISTER contains notices to the public of the proposed issuance of rules and regulations. The purpose of these notices is to give interested persons an opportunity to participate in the rule making prior to the adoption of the final rules.

DEPARTMENT OF AGRICULTURE

Food Safety and Inspection Service

9 CFR Parts 381 and 500

[Docket No. FSIS–2011–0012]

RIN 0583–AD32

Modernization of Poultry Slaughter Inspection

AGENCY: Food Safety and Inspection Service, USDA.

ACTION: Proposed rule; extension of comment period.

SUMMARY: The Food Safety and Inspection Service (FSIS) is extending the comment period for the proposed rulemaking ''Modernization of Poultry Slaughter Inspection'' and responding to questions and addressing issues that have been raised concerning the proposed rule. The comment period was scheduled to close on April 26, 2012. During the comment period, a coalition of consumer advocacy organizations and two trade associations representing the poultry industry asked that FSIS clarify certain aspects of the proposed rule to help inform their comments. This document summarizes the issues raised by these groups and FSIS's response. FSIS is also soliciting additional comments on how it should implement the final rule resulting from the proposal and requesting available data on any worker safety issues associated with increased line speeds.

FSIS received a request to hold a public technical meeting on the proposed rule. FSIS does not believe that such a meeting would be useful. The Agency will, however, assess public understanding of the proposed rule in connection with its review and evaluation of the comments submitted and will respond as appropriate.

DATES: The proposed rule published January 27, 2012 (77 FR 4408) is extended. Comments are due May 29, 2012.

ADDRESSES: Comments may be submitted by either of the following methods:

- *Federal eRulemaking Portal:* This Web site provides the ability to type short comments directly into the comment field on this Web page or attach a file for lengthier comments. Go to *http://www.regulations.gov*. Follow the online instructions at that site for submitting comments.
- *Mail, including floppy disks or CD–ROMs, and hand- or courier-delivered items:* Send to Docket Clerk, U.S. Department of Agriculture (USDA), FSIS, Docket Clerk, Patriots Plaza 3, 355 E. Street SW., 8–163A, Mailstop 3782, Washington, DC 20250–3700.

Instructions: All items submitted by mail or electronic mail must include the Agency name and docket number FSIS–2011–0012. Comments received in response to this docket will be made available for public inspection and posted without change, including any personal information, to *http://www.regulations.gov*.

FOR FURTHER INFORMATION CONTACT: Dr. Daniel Engeljohn, Assistant Administrator, Office of Policy and Program Development, FSIS, U.S. Department of Agriculture, 1400 Independence Avenue SW., Washington, DC 20250–3700, (202) 720–2709.

SUPPLEMENTARY INFORMATION:

Background

On January 27, 2012, FSIS published a proposed rule, ''Modernization of Poultry Slaughter Inspection'' (77 FR 4408). In that document, the Agency proposed a new inspection system for young chicken and turkey slaughter establishments that would replace all of the existing inspection systems except for traditional inspection. Key elements of the proposed new inspection system include: (1) Requiring that establishment personnel sort carcasses and remove unacceptable carcasses and parts before the birds are presented to the FSIS carcass inspector; (2) reducing the number of on-line carcass inspectors to one; (3) permitting faster line speeds than are permitted under the existing inspection systems; and (4) replacing the existing Finished Product Standards (FPS) with a requirement that establishments that operate under the new inspection system maintain records to document that the products resulting from their slaughter operations meet the definition of ready-to-cook poultry. In addition to the proposed new inspection system, FSIS also proposed changes that would require, among other things, that all establishments that slaughter poultry other than ratites develop, implement, and maintain written procedures to prevent contamination of carcasses and parts by enteric pathogens and fecal material, and that they incorporate these procedures into their HACCP plan or sanitation standard operating procedures (SOP) or other prerequisite programs.

During the comment period for the proposal, FSIS officials met with representatives from a coalition of consumer advocacy organizations and two trade associations representing the poultry industry. The consumer advocacy coalition and one of the trade associations had requested that FSIS clarify certain aspects of the proposed rule to inform their comments on the proposal. Because the issues addressed in these meetings may be relevant to the development of comments from other stakeholders, a brief summary of these issues and the Agency's response are described below. The other trade association requested that FSIS provide additional information on how the Agency intends to implement the proposed new poultry inspection system. The groups submitted written questions to the Agency to consider before each meeting. The issues raised on implementation are summarized in a separate section of this document that outlines and requests comments on how the Agency plans to implement the final rule.

Summary of Issues Raised and FSIS Response

In addition to the questions outlined below, certain members of consumer advocacy organizations requested that FSIS hold a public technical meeting on the proposed rule. FSIS is clarifying certain aspects of the proposed rule in this **Federal Register** notice and will assess public understanding of the proposed rule in connection with its review and evaluation of the comments submitted. The Agency will provide any needed clarification if a final rule is adopted.

Following is a summary of the issues raised and FSIS's response.

1. Issues Raised by the Consumer Advocacy Coalition

Comment: Why does FSIS believe that it is preferable for plant employees to sort carcasses?

FSIS response: Under the existing inspection systems, on-line inspectors conduct activities that do not have a direct impact on public health. If the proposal is finalized, and the establishment conducts sorting activities, the only birds presented to the carcass inspector (CI) would be those that are likely to pass inspection. Therefore, the CI will be able to focus on food safety-related activities, such as verifying that carcasses affected by septicemia or toxemia or contaminated with visible fecal material do not enter the chiller. For these reasons, the Agency is proposing to remove certain on-line inspection activities that are not directly related to public health.

Comment: Is there any guarantee that FSIS inspectors would be performing more food safety-related activities under the proposed new inspection system?

FSIS response: Yes, generally inspectors would be performing more food safety-related activities. There are three important aspects of the proposed rule that would allow FSIS inspectors to conduct more food safety-related activities. First, because the on-line CI would not be responsible for sorting carcasses for quality-related defects, the amount of time that the CI spends focusing on food safety-related activities would increase. Second, under the proposed new inspection system, the offline verification inspector (VI) would primarily conduct food safety-related activities, such as verifying compliance with HACCP and sanitation SOP requirements and collecting product samples. Third, because FSIS considers contamination by enteric pathogens and fecal contamination to be hazards that are reasonably likely to occur, FSIS is proposing to require that all establishments that slaughter poultry have written programs to address sanitary dressing procedures, and that, at a minimum, these procedures include microbiological testing at pre-chill and post-chill to monitor process control. In addition to conducting verification checks on carcasses, FSIS off-line inspectors would be reviewing the establishment's records and test results to verify that the establishment maintains process control.

Comment: What type of training would FSIS require for establishment employees assigned to sort carcasses?

FSIS response: The proposed rule does not prescribe training for establishment employees. However, as noted in the preamble to the proposed rule, FSIS expects to convert the current instructions that it provides to Agency inspectors into guidance for industry to use to train plant sorters (77 FR 4419).

Comment: What would establishment employees be required to do as part of their sorting activities?

FSIS response: Should the rule become final, establishment sorters would be required to identify carcasses with septicemia/toxemia and other condemnable conditions and to remove them from the line before they reach the CI. Establishment employees would also need to conduct trimming and re-processing before the birds reach the CI.

Comment: Will establishment employees need to look inside the bird as part of their sorting responsibilities?

FSIS response: Septicemic/toxemic birds exhibit signs on the outside of the carcass, so there is no need to look at the viscera. The regulations that prescribe conditions for condemnation in 9 CFR 381.81–381.93 would still apply. Establishment personnel would need to conduct sorting activities to address these condemnable conditions before the birds reach the CI. The conditions described in these regulations can be readily identified by examining the outside of the carcass.

Lesions on the viscera do not require condemnation of the entire carcass except for lesions associated with visceral leukosis. The proposed rule provides for a 300-bird inspection of young chickens with the viscera (77 CFR 4421–4422). If the inspector finds signs or symptoms associated with visceral leukosis, then the entire flock would be inspected for the disease. All growers vaccinate birds for visceral leukosis. Therefore, it is seen only on rare occasions if the vaccine fails.

Comment: How does the proposed rule address other consumer protection (OCP) issues, such as digestive tract contents found on products, that may affect internal parts of the carcass?

FSIS response: There is a difference between fecal material and ingesta as digestive tract contents. We have no evidence to show that ingesta carries the same microbes as fecal contamination. Under the proposal, FSIS would enforce OCP processing defects that are associated with digestive tract contents, other than fecal contamination, in enforcing the ready-to-cook (RTC) poultry standard.

Comment: Where would the establishment's critical control point (CCP) for visible fecal contamination be located?

FSIS response: FSIS does not prescribe where establishments must locate CCPs. The CI would be located before the chiller. Visible fecal contamination would need to be removed before the carcass is presented to the CI. The VI would be conducting verification checks for fecal contamination off-line. If the VI detects fecal contamination offline, the plant has exceeded the zero tolerance for visible fecal contamination.

The present inspection system is similar to the proposed system in that there are inspectors located upstream, and zero tolerance is enforced at a point at final wash, before the carcass enters the chiller. However, under the proposed new system the CI is more likely to observe visible fecal contamination because the carcasses would be free from animal diseases and trim and processing defects.

Comment: Under the proposed rule, can FSIS take regulatory action throughout the entire dressing process?

FSIS Response: The proposed rule would require that establishments develop, implement, and maintain procedures to address contamination by enteric pathogens and fecal material throughout the entire slaughter and dressing process. Through inspection activities, FSIS would ensure that the establishment's procedures are effective, and the Agency would take appropriate regulatory action when necessary.

Comment: Would there be an approval process for the establishment's procedures to prevent contamination with enteric pathogens and fecal material?

FSIS response: There would be no pre-approval of an establishment's procedures. However, establishments would need to ensure that their procedures for preventing contamination are effective. To verify that an establishment's procedures are effective, FSIS would consider: (1) The microbiological data that the establishment would be required to collect pre-chill and post-chill to demonstrate process control; (2) presence of visible fecal contamination; and (3) FSIS sampling results for *Salmonella* and *Campylobacter.*

Comment: What was the basis for the baseline sampling numbers presented in the preamble to the proposed rule (74 FR 4442)?

FSIS response: The estimates for sampling come from the economic analysis and reflect what we estimate to be the amount of sampling that plants would conduct if the proposed rule is adopted by the Agency. We are not proposing to prescribe how often establishments must test. Establishments would need to determine the frequency and type of sampling that would be sufficient to

demonstrate that they are maintaining process control.

Comment: Why is FSIS not mandating a frequency for testing?

FSIS response: As stated in the preamble to the proposed rule, FSIS is proposing to require that an establishment's sampling frequency be adequate to monitor the effectiveness of its process control for enteric pathogens (77 FR 4428). The frequency with which establishments would need to conduct such testing would depend on a number of factors, including their production volume, the source of their flocks, their slaughter and dressing process, and the consistency of their microbial test results over time. Because the testing frequency would be an integral part of an establishment's HACCP system verification procedures, establishments would need to collect and maintain data to demonstrate that their testing frequency is adequate to verify the effectiveness of their process control procedures.

Comment: Why did the Agency propose two points for microbiological testing instead of three?

FSIS response: As noted in the preamble to the proposed rule, FSIS had considered requiring testing at three points in the process, i.e., re-hang, pre-chill and post-chill (77 FR 4428). The proposed rule provides for testing at pre-chill and post-chill because the Agency tentatively concluded that verification testing conducted at these two points would provide the evidence establishments need to verify that their process control measures are effective in preventing carcasses from becoming contaminated with pathogens. In the preamble to the proposed rule, the Agency explained that it considered requiring a third verification test at the re-hang position to monitor the incoming load of pathogens but tentatively decided that it was not necessary to impose the additional costs that would be associated with testing at this point (77 FR 4428). FSIS also considered requiring only one verification test at any position along the production line to provide maximum flexibility but concluded this approach may not be sufficient to monitor the effectiveness of an establishment's procedures to prevent contamination throughout the slaughter and dressing operation. The Agency requests comments on these alternatives.

Comment: Can CI inspectors stop or slow the line?

FSIS response: If the CI observes a condemnable condition, either food safety or generalized OCP condition requiring condemnation of the entire carcass, the CI would be authorized to stop the line to prevent such carcasses from entering the chiller. The CI would communicate the findings to the VI and inspector-in-charge (IIC). The IIC would consider available data to reset the line speed. Line speed would be determined by IIC's assessment of the frequency of carcass defects identified by the CI and the VI and the plant's control of its processes.

Comment: Would offline inspectors be available to visually inspect carcasses under the proposed new system.

FSIS response: The off-line VI would be checking carcasses to verify that they do not contain food safety-related contamination or defects.

Comment: How many HACCP verification activities would occur under the new system versus the old system?

FSIS Response: HACCP and sanitation verification activities would be a higher fraction of inspection activities under the proposed new inspection system as the Agency reduces its focus on quality and other OCP defects.

Comment: What is the relationship between the ready-to-cook (RTC) poultry standard in the proposed rule and the existing Finished Product Standards (FPS)?

FSIS response: Poultry products that comply with the FPS meet the definition of RTC poultry under the existing regulations; i.e., they are suitable for cooking without the need for further processing. The FPS have been in place for many years and were used to inform the OCP standards in the HIMP pilot. These OCP standards reflect OCP performance in establishments before HIMP. Establishments operating under HIMP maintained OCP defect levels that average about half the corresponding OCP performance standards. Therefore, FSIS has determined that it is not necessary to require that establishments operating under the proposed new inspection system meet prescriptive OCP performance standards in order to produce RTC poultry. Under the proposed rule, establishments operating under the proposed new inspection system would have the flexibility to implement the process controls that they have determined would best allow them to produce RTC poultry.

Comment: What happens to the carcasses and parts that are rejected by the plant?

FSIS response: All regulations that apply to condemned carcasses/parts would still apply under the new inspection system, e.g., denaturing and diverting away from human food. The off-line VI would verify that the plant is properly disposing of inedible and condemned carcasses and parts.

Comment: For OCP defects under HIMP, there is a moving window in which there is non-compliance if the plant exceeds OCP standards. What about under the proposed rule?

FSIS response: The Agency is moving away from using the moving window to meet OCP performance standards. Under the proposed rule, establishments would determine how they would document that they are producing RTC poultry. The Agency is not prescribing where or how establishments would address OCP defects.

Comment: If establishments under the proposed new inspection system are permitted to increase the line speed, would the CI continue to detect problems?

FSIS response: Analysis of HIMP data shows that CIs are able to detect fecal contamination and septicemia/toxemia at line speeds of up to 175 birds per minute (bpm) for young chickens.

Comment: Did the Agency consider the effects of faster line speeds on worker safety?

FSIS response: FSIS did consider potential effects on safety. The Agency is prepared to address worker safety within the bounds of its regulatory authority and will coordinate with the Occupational Safety and Health Administration (OSHA) as the regulatory process moves forward. The National Institute for Occupational Safety and Health (NIOSH) study described in the proposed rule is a start to determine what the current baseline performance indicators for worker safety in plants are before an increase in line speeds. We will use the NIOSH assessment tool and consider ways that we can supplement the NIOSH study. We are interested in comments on the effects of line speed and worker safety.

Comment: Why did the Agency propose to reduce the length of the CI inspection station so that there is no room for a helper?

FSIS response: Helpers are necessary under the existing inspection systems because the inspectors are sorting, and the birds have more defects. The proposed rule does not preclude an establishment from assigning a helper, but because the birds presented to the CI would have fewer defects, there is no need for a helper. Therefore, under the proposed rule, the requirement for the helper stand at the inspection CI inspection station would be removed.

Comment: The *Salmonella* results in the HIMP report compare HIMP plants with comparison plants. How many of the HIMP plants, and how many of the comparison plants, had received

waivers for on-line reprocessing (OLR) in each year since the HIMP pilot began? Is it possible that OLR was responsible for lower *Salmonella* positive rates?

FSIS response: Before November 2011, FSIS did not track the date of implementation of approved waivers for OLR systems. In November 2011, all establishments with existing waivers were required to participate in the *Salmonella* Initiative Project (SIP) or forfeit their waivers. FSIS is able to track the dates that OLR waivers were implemented under SIP. Based on information obtained under SIP, as of March 2011, 15 of the 20 HIMP plants had waivers for OLR (75%), and 61 of the 64 comparison plants had waivers for OLR (95.3%).

2. Issues Raised by the Trade Association

Comment: Can FSIS clarify how visible fecal contamination would be handled under the new poultry inspection system?

FSIS response: An important aspect of the proposed rule is the provision that requires that all poultry establishments develop procedures to prevent fecal contamination and contamination by enteric pathogens throughout the entire process and not just cleaning up the birds at the end of the process. These written procedures would need to be incorporated into the HACCP system. Therefore, FSIS would not just be checking at the end of the line to verify that the establishment's procedures for preventing contamination are effective. FSIS would be conducting verification activities throughout the entire process to assess whether the process is in control, including proper implementation and effective corrective actions. Findings of fecal contamination throughout the process would indicate a lack of process control. The proposed rule also requires that all poultry slaughter establishments have procedures to prevent carcasses with visible fecal contamination from entering the chiller, and that they incorporate these procedures into their HACCP system. FSIS would consider these procedures to be ineffective if a contaminated carcass entered the chiller.

Comment: How were the line speeds referenced in the proposed rule determined? Do you have any additional data on how maximum line speeds for turkey plants were determined?

FSIS response: The line speeds were based on our experience under HIMP. We are interested in comments and data on the proposed line speeds.

Comment: What are the expectations for validation under the proposed rule, particularly for the proposed changes to the time and temperature chilling requirements?

FSIS response: The validation requirement under the proposed rule would be the same as what is required under the existing regulations (9 CFR 417.4(a)). There would not be any special validation requirement under the new poultry slaughter rule.

Comment: Should establishments continue to apply for SIP waivers if they are interested in pursuing new technologies in their slaughter operations, or should they wait until FSIS issues a final rule on the new poultry inspection system?

FSIS response: Establishments should continue to request waivers of regulations that impact slaughter operations, such as OLR and alternative chilling procedures, if they are interested in operating under such waivers. Existing SIP waivers would continue until FSIS implements the final rule. If a waiver is not addressed in any final rule resulting from this proposal, then it would remain in effect until another final rule is published.

Comment: What is pre-chill? When would the pre-chill testing occur? Is post-chill testing supposed to be conducted after the final intervention?

FSIS response: Pre-chill occurs just before the chilling operation, at the end of the evisceration process. The pre-chill testing is intended to monitor the effectiveness of all process controls up to the point of the chilling operation. Therefore, pre-chill testing should be conducted before the chiller, at the end of the evisceration process. Post-chill testing would be at the same point in the process as it is now for FSIS *Salmonella* and *Campylobacter* verification testing, that is, after all interventions.

Comment: What would the parameters for faster or slower line speeds be?

FSIS response: The on-line inspector would be authorized to stop the line to prevent adulterated carcasses from entering the chiller. The IIC would be authorized to slow the line. This is the same as in current HIMP and non-HIMP establishments. The on-line CI and off-line VI would communicate and inform the IIC if they observe excessive food safety or non-food safety- related defects, and the IIC would assess the need to reduce the line speed or take other appropriate measures.

Comment: If the final rule becomes effective, would plants be able to start running at the faster line speeds right away or would there be a gradual increase in line speeds?

FSIS response: To operate at faster line speeds, plants would need to comply with all of the requirements in any final rule that results from this rulemaking. The establishment's maximum line speed would depend on the ability of the establishment to maintain process control, and whether conditions are affecting the ability of the CI to properly inspect.

Implementation of the Proposed New Inspection System

1. Proposed Implementation Approach

In the preamble to the proposed rule, FSIS invited interested persons to submit comments on how the Agency should implement the new poultry inspection system if it finalizes the proposed rule. The Agency specifically requested comment on whether it should phase-in the implementation of the final rule to provide additional time for small and very small establishments to adjust their operations to comply with the new requirements (77 FR 4408). The Agency also requested comments on how it can make the phased implementation most effective. In this document, FSIS is providing additional information on how it intends to implement the new poultry inspection system to solicit more focused comments on this issue.

The Agency has tentatively decided that if it finalizes the proposed rule, it would then provide a time period in which all young chicken and turkey slaughter establishments would have an opportunity to contact the Agency to indicate whether they are interested in operating under the proposed new inspection system. Those establishments that choose to operate under the new inspection system would then inform the Agency concerning when they wish to begin implementing the new inspection system in their facilities. The Agency is considering giving establishments six months to decide whether they would operate under the new inspection system and up to 3 years to switch to the new system. FSIS requests comments on this proposed implementation approach and the proposed time periods.

2. Issues Raised on Implementation

Comment: How would the district offices direct their resources to implement the final rule?

FSIS response: The FSIS implementation plan would be coordinated from headquarters through the districts to ensure resource availability and fair and equitable

implementation across all interested establishments.

Comment: Does the Agency anticipate making additional resources available to implement a final rule, even if only on a temporary basis?

FSIS response: As discussed in the preamble to the proposed rule, there would be two consumer safety inspector (CSI) positions for every slaughter evisceration line assigned to establishments that choose to adopt the new poultry slaughter inspection system, one CI and one VI (77 FR 4421–4422). This represents a reduction in the number of inspectors because under the existing system, inspectors conduct sorting activities. At this time, the Agency does not anticipate that additional resources would be needed to implement the new poultry inspection system but would make additional resources available, such as guidance for industry and training to FSIS inspectors, as needed to ensure smooth implementation of the final rule.

Comment: In the preamble to the proposed rule, the Agency estimated that 219 poultry slaughter establishments would choose to operate under the proposed new inspection system. How does the Agency intend to implement the proposed new system in all 219 establishments in a smooth and fair manner?

FSIS Response: The Agency is interested in comments on the implementation phase-in and would use comments to inform implementation planning, including strategies for recruitment, staffing, training, and other actions needed to ensure FSIS readiness to implement the proposed rule in an efficient and fair manner. The Agency intends to begin implementing the proposed NPIS when it finalizes the rule. However, implementation would not take place at all eligible plants at the same time. It would be phased in over time to ensure proper FSIS inspection force readiness to successfully implement the new system.

Comment: How does the Agency intend to train inspectors in the new inspection system and familiarize them with the new requirements?

FSIS response: Inspectors assigned to work in poultry slaughter establishments converting to the proposed new inspection system would receive training on the new system before the establishments they are assigned to convert to the new system. The Agency is considering various approaches to ensure effectiveness and uniformity in its workforce training.

Comment: Is the Agency planning to provide any type of standardized programs to assist in training the establishment sorters in disease recognition and disposition for trimmable defects or is this responsibility being left up to the establishments?

FSIS response: As noted in the preamble to the proposed rule, FSIS plans to convert the current instructions that it provides to Agency inspectors into guidance for industry to use to train plant sorters.

Comment: Does the Agency anticipate developing a framework by which establishments or inspectors can receive quick and consistent clarification on requirements or feedback on inspectional decisions from headquarters?

FSIS response: The Agency would continue to provide technical support to its workforce and industry through its standard channels. For example, FSIS would continue to encourage referring questions to its Policy Development Division through askFSIS at *http://askfsis.custhelp.com* or by telephone at 1–800–233–3935. The Agency would develop appropriate instructions to inspectors as well as appropriate compliance guides.

Worker Safety Issues

FSIS's direct legal authority with respect to regulating working conditions extends only to inspection personnel. The Department of Labor's OSHA is the lead Federal agency responsible for establishment worker safety issues. However, FSIS recognizes the importance of establishment worker safety and is interested in additional information about the potential intersection of increased line speeds and worker safety.

As noted in the preamble to the proposed rule, FSIS has asked NIOSH to evaluate the effects of increased line speed by collecting data from one to five non-HIMP plants that requested waivers from line speed restrictions under the *Salmonella* Initiative Project (SIP) (77 FR 4422). NIOSH expressed its willingness to evaluate the effects of increased production volume on employee health, with a focus on musculoskeletal disorders and acute traumatic injuries. NIOSH will prepare a report based on its findings of short-, intermediate-, and long-term effects from the process modifications. We expect that the NIOSH report will also make recommendations to the Agency as appropriate. FSIS, in collaboration with OSHA, will consider the available data on employee effects collected from NIOSH activities when implementing the final rule resulting from the proposal.

To facilitate further evaluation of this issue, FSIS requests specific comments on the effects of increased line speeds and production volume on worker safety. The Agency is particularly interested in comments on the availability of records or studies that contain data that NIOSH may be able to use to assist the Agency in analyzing the effects of increased line speed on the safety and health of employees throughout the establishment, including effects prior to and following the evisceration line. The Agency is interested in the availability of records and studies that include documentation on employees' work, injuries, and illnesses, as well as plant production, both before and after establishments made changes to their operations to increase production volume. Such records and studies include, but are not limited to:

- Human resources and payroll data for all employees on hours worked per year, department, job title, hire date, separation date, and position responsibilities;
- OSHA logs, workers' compensation claims, first reports of injury or illness, dispensary logs and records, and other injury or illness narratives for all employees; and
- Daily production hours;
- Results of ergonomic or industrial engineering studies, such as time-and-motion analyses that document the actual pace of work or physical stresses on workers; and
- Any self-assessments of worker safety conducted by establishments.

Comments on this issue should describe the type of data available, whether the data are available in an electronic or paper format, where the records are maintained, (e.g., at the establishment or at corporate headquarters), and any other information that can be used to assess the utility of the data. The comments should provide information, including contact information, on how FSIS or NIOSH can gain access to the data or studies.

In addition, FSIS will continue its collaboration with NIOSH and OSHA, developing guidance materials on measures that establishments could adopt and implement to promote and better ensure worker safety. To facilitate the development of such guidance, FSIS requests comments on best practices and other measures that establishments can take to protect workers throughout the plant, including possible protective factors such as increasing the size of the workforce, rotating assignments, increased automation, or improved tools and techniques.

Additional Public Notification

FSIS will announce the availability of this **Federal Register** notice on-line through the FSIS Web page located at *http://www.fsis.usda.gov/regulations_&_policies/Proposed_Rules/index.asp.*

FSIS also will make copies of this **Federal Register** publication available through the *FSIS Constituent Update,* which is used to provide information regarding FSIS policies, procedures, regulations, **Federal Register** notices, FSIS public meetings, and other types of information that could affect or would be of interest to our constituents and stakeholders. The *Update* is communicated via Listserv, a free email subscription service consisting of industry, trade, and farm groups, consumer interest groups, allied health professionals, scientific professionals, and other individuals who have requested to be included. The *Update* also is available on the FSIS Web page. Through Listserv and the Web page, FSIS is able to provide information to a much broader, more diverse audience.

In addition, FSIS offers an email subscription service which provides automatic and customized access to selected food safety news and information. This service is available at *http://www.fsis.usda.gov/news_&_events/email_subscription/.* Options range from recalls to export information to regulations, directives and notices. Customers can add or delete subscriptions themselves, and have the option to password protect their accounts.

Done in Washington, DC on April 23, 2012.

Alfred V. Almanza,

Administrator.

[FR Doc. 2012–10111 Filed 4–25–12; 8:45 am]

BILLING CODE 3410–DM–P

DEPARTMENT OF JUSTICE

28 CFR Part 16

[CPCLO Order No. 008–2012]

Privacy Act of 1974; Implementation

AGENCY: Bureau of Prisons, Department of Justice.

ACTION: Notice of proposed rulemaking.

SUMMARY: In the **Federal Register**, the Bureau of Prisons (Bureau or BOP), a component of the Department of Justice, has published a notice of a revised Privacy Act system of records, Inmate Central Records System (JUSTICE/BOP–005). In this notice of proposed rulemaking, the Bureau proposes to amend its Privacy Act regulations for the Inmate Central Records System (JUSTICE/BOP–005) by now exempting this system from subsections (c)(3) and (4); (d); (e)(1), (2), (3), (4)(G), (H), and (I), (5), and (8); (f); and (g) of the Privacy Act of 1974 pursuant to 5 U.S.C. 552a(j) and (k) for the reasons set forth in the following text. The exemptions are necessary to avoid interference with the law enforcement and functions and responsibilities of the Bureau.

Public comment is invited.

DATES: Comments must be received by May 29, 2012.

ADDRESSES: Address all comments to the Privacy Analyst, Office of Privacy and Civil Liberties, National Place Building, Suite 1000, Washington, DC 20530, or by facsimile 202–307–0693. To ensure proper handling, please reference the CPCLO Order number in your correspondence. You may review an electronic version of the proposed rule at *http://www.regulations.gov.* You may also submit a comment via the Internet by using the comment form for this regulation at *http://www.regulations.gov.* Please include the CPCLO Order number in the subject box.

Please note that the Department is requesting that electronic comments be submitted before midnight Eastern Standard Time on the day the comment period closes because *http://www.regulations.gov* terminates the public's ability to submit comments at that time. Commenters in time zones other than Eastern Standard Time may want to consider this so that their electronic comments are received. All comments sent via regular or express mail will be considered timely if postmarked on the day the comment period closes.

Posting of Public Comments: Please note that all comments received are considered part of the public record and made available for public inspection online at *http://www.regulations.gov* and in the Department's public docket. Such information includes personally identifying information (such as name, address, etc.,) voluntarily submitted by the commenter.

If you want to submit personally identifying information (such as your name, address, etc.) as part of your comment, but do not want it to be posted online or made available in the public docket, you must include the term ''PERSONALLY IDENTIFYING INFORMATION'' in the first paragraph of your comment. You must also place all the personally identifying information you do not want posted online or made available in the public docket in the first paragraph of your comment and identify what information you want redacted.

If you want to submit confidential business information as part of your comment, but do not want it to be posted online or made available in the public docket, you must include the term ''CONFIDENTIAL BUSINESS INFORMATION'' in the first paragraph of your comment. You must also prominently identify confidential business information to be redacted within the comment. If a comment has so much confidential business information that it cannot be effectively redacted, all or part of that comment may not be posted online or made available in the public docket.

Personally identifying information and confidential business information identified and located as set forth above will be redacted and the comment, in redacted form, will be posted online and placed in the Department's public docket file. Please note that the Freedom of Information Act applies to all comments received. If you wish to inspect the agency's public docket file in person by appointment, please see the **FOR FURTHER INFORMATION CONTACT** paragraph.

FOR FURTHER INFORMATION CONTACT: C. Darnell Stroble, Attorney-Advisor, Federal Bureau of Prisons, 202–514–9180.

SUPPLEMENTARY INFORMATION: In the Notice section of today's **Federal Register**, the Bureau published a revised Privacy Act system of records notice, Inmate Central Records System (JUSTICE/BOP–005). This system assists the Attorney General and the Bureau of Prisons in meeting statutory responsibilities for the safekeeping, care and custody of incarcerated persons. It serves as the primary record system on these individuals and includes information critical to the continued safety and security of federal prisons and the public.

In this rulemaking, the Bureau proposes to exempt this Privacy Act system of records from certain provisions of the Privacy Act pursuant to 5 U.S.C. 552a(j) and (k). Although this system of records was previously exempt from certain provisions of the Privacy Act pursuant to 5 U.S.C. 552a(j)(2), the Bureau is seeking additional exemptions pursuant to 5 U.S.C. 552a(j)(2), adding exemptions pursuant to 5 U.S.C. 552a(k), and consolidating the exemptions together in one location of the Code of Federal Register. Therefore, the proposed rule seeks to delete all references of the Inmate Central Records System (JUSTICE/BOP–005) from paragraphs (a)

and (b) of 28 CFR 16.97 and replace paragraphs (j) and (k) of 28 CFR 16.97 with new exemption language as set forth in the following text.

Regulatory Flexibility Act

This proposed rule relates to individuals, as opposed to small business entities. Pursuant to the requirements of the Regulatory Flexibility Act, 5 U.S.C. 601–612, therefore, the proposed rule will not have a significant economic impact on a substantial number of small entities.

Small Entity Inquiries

The Small Business Regulatory Enforcement Fairness Act (SBREFA) of 1996, 5 U.S.C. 601 et seq., requires the Bureau to comply with small entity requests for information and advice about compliance with statutes and regulations within Bureau jurisdiction. Any small entity that has a question regarding this document may contact the person listed in **FOR FURTHER INFORMATION CONTACT**. Persons can obtain further information regarding SBREFA on the Small Business Administration's Web page at *http://archive.sba.gov/advo/laws/sbrefa.html.*

Paperwork Reduction Act

The Paperwork Reduction Act of 1995, 44 U.S.C. 3507(d), requires that the BOP consider the impact of paperwork and other information collection burdens imposed on the public. There is no current or new information collection requirement associated with this proposed rule. The records that are contributed to the Inmate Central Records system would be created in any event by law enforcement entities and their sharing of this information electronically will not increase the paperwork burden on the public.

Unfunded Mandates

Title II of the Unfunded Mandates Reform Act of 1995 (UMRA), Public Law 104–4, 109 Stat. 48, requires Federal agencies to assess the effects of certain regulatory actions on State, local, and tribal governments, and the private sector. UMRA requires a written statement of economic and regulatory alternatives for proposed and final rules that contain Federal mandates. A ''Federal mandate'' is a new or additional enforceable duty, imposed on any State, local, or tribal government, or the private sector. If any Federal mandate causes those entities to spend, in aggregate, $100 million or more in any one year the UMRA analysis is required. This proposed rule would not impose Federal mandates on any State, local, or tribal government or the private sector.

List of Subjects in 28 CFR Part 16

Administrative practices and procedures, Courts, Freedom of Information Act, Government in the Sunshine Act, and the Privacy Act.

Pursuant to the authority vested in the Attorney General by 5 U.S.C. 552a and delegated to me by Attorney General Order 2940–2008, it is proposed to amend 28 CFR Part 16 as follows:

PART 16—[AMENDED]

1. The authority citation for part 16 continues to read as follows:

Authority: 5 U.S.C. 301, 552, 552a, 552b(g), 553; 18 U.S.C. 4203(a)(1); 28 U.S.C. 509, 510, 534; 31 U.S.C. 3717, 9701.

Subpart E—Exemption of Records Systems Under the Privacy Act

2. Section 16.97 is amended to delete all references to ''Inmate Central Record System (JUSTICE/BOP–005)'' from paragraphs (a) and (b) and replace (j) and (k) with the following:

§ 16.97 Exemption of Bureau of Prisons Systems—limited access.

* * * * *

(j) The following system of records is exempt pursuant to 5 U.S.C. 552a(j) and (k) from subsections (c)(3) and (4); (d); (e)(1), (2), (3), (4)(G), (H), and (I), (5), (8); (f); and (g): The Inmate Central Records System (JUSTICE/BOP–005).

(k) These exemptions apply only to the extent that information in this system is subject to exemption pursuant to 5 U.S.C. 552a(j)(2) and/or (k)(2). Where compliance would not appear to interfere with or adversely affect the law enforcement process, and/or where it may be appropriate to permit individuals to contest the accuracy of the information collected, the applicable exemption may be waived, either partially or totally, by the BOP. Exemptions from the particular subsections are justified for the following reasons:

(1) From subsection (c)(3), the requirement that an accounting be made available to the named subject of a record, because this system is exempt from the access provisions of subsection (d). Also, because making available to a record subject the accounting of disclosures from records concerning him/her would specifically reveal any investigative interest in the individual. Revealing this information may thus compromise ongoing law enforcement efforts, as well as efforts to identify and defuse any potential acts of terrorism. Revealing this information may also permit the record subject to take measures to impede the investigation, such as destroying evidence, intimidating potential witnesses, or fleeing the area to avoid the investigation.

(2) From subsection (c)(4) notification requirements because this system is exempt from the access and amendment provisions of subsection (d).

(3) From subsections (d)(1), (2), (3), and (4), because these provisions concern individual access to and amendment of records, compliance with which could jeopardize the legitimate correctional interests of safety, security, and good order of prison facilities; alert the subject of a suspicious activity report of the fact and nature of the report and any underlying investigation and/or the investigative interest of the BOP and other law enforcement agencies; interfere with the overall law enforcement process by leading to the destruction of evidence, improper influencing of witnesses, and/or flight of the subject; possibly identify a confidential source or disclose information which would constitute an unwarranted invasion of another's personal privacy; reveal a sensitive investigative or intelligence technique; or constitute a potential danger to the health or safety of law enforcement personnel, confidential informants, and witnesses. Although the BOP has rules in place emphasizing that records should be kept up to date, requirement of amendment of these records would interfere with ongoing law enforcement activities and impose an impossible administrative burden by requiring investigations, analyses, and reports to be continuously reinvestigated and revised.

(4) From subsection (e)(1) because it is not always possible to know in advance what information is relevant and necessary for the proper safekeeping, care, and custody of incarcerated persons, and for the proper security and safety of federal prisons and the public. In addition, to the extent that the BOP may collect information that may also be relevant to the law enforcement operations of other agencies, in the interests of overall, effective law enforcement, such information should be retained and made available to those agencies with such relevant responsibilities.

(5) From subsections (e)(2) because the nature of criminal investigative and correctional activities is such that vital information about an individual can be obtained from other persons who are familiar with such individual and his/her activities. In such investigations and activities, it is not feasible to rely solely

upon information furnished by the individual concerning his/her own activities since it may result in inaccurate information and compromise ongoing criminal investigations or correctional management decisions.

(6) From subsections (e)(3) because in view of BOP's operational responsibilities, the application of this provision would provide the subject of an investigation or correctional matter with substantial information which may in fact impede the information gathering process or compromise ongoing criminal investigations or correctional management decisions.

(7) From subsections (e)(4)(G) and (H) because this system is exempt from the access provisions of subsection (d) pursuant to subsections (j) and (k) of the Privacy Act.

(8) From subsection (e)(4)(I) because publishing further details regarding categories of sources of records in the system would compromise ongoing investigations, reveal investigatory techniques and descriptions of confidential informants, or constitute a potential danger to the health or safety of law enforcement personnel.

(9) From subsection (e)(5) because in the collection and maintenance of information for law enforcement purposes, it is impossible to determine in advance what information is accurate, relevant, timely, and complete. Data which may seem unrelated, irrelevant or incomplete when collected may take on added meaning or significance during the course of an investigation or with the passage of time, and could be relevant to future law enforcement decisions. In addition, because many of these records come from the courts and other state and local criminal justice agencies, it is administratively impossible for them and the Bureau to ensure compliance with this provision. The restrictions of subsection (e)(5) would restrict and delay trained correctional managers from timely exercising their judgment in managing the inmate population and providing for the safety and security of the prisons and the public.

(10) From subsection (e)(8), because to require individual notice of disclosure of information due to a compulsory legal process would pose an impossible administrative burden on BOP and may alert subjects of investigations, who might otherwise be unaware, to the fact of those investigations.

(11) From subsection (f) to the extent that this system is exempt from the provisions of subsection (d).

(12) From subsection (g) to the extent that this system is exempted from other provisions of the Act.

Dated: April 18, 2012.

Nancy C. Libin,

Chief Privacy and Civil Liberties Officer, United States Department of Justice.

[FR Doc. 2012–9774 Filed 4–25–12; 8:45 am]

BILLING CODE 4410–05–P

DEPARTMENT OF HOMELAND SECURITY

Coast Guard

33 CFR Part 165

[Docket No. USCG–2012–0072]

RIN 1625–AA00

Safety Zone; Jet Express Triathlon, Sandusky Bay, Lake Erie, Lakeside, OH

AGENCY: Coast Guard, DHS.

ACTION: Notice of proposed rulemaking.

SUMMARY: The Coast Guard proposes to establish a temporary safety zone on the waters of Lake Erie in the vicinity of East Harbor State Park, OH, from 8 a.m. until 10 a.m. on September 9, 2012. This proposed safety zone is intended to restrict vessels from portions of Lake Erie during the Jet Express Triathlon. This proposed safety zone is necessary to protect participants, spectators and vessels from the hazards associated with triathlon event.

DATES: Comments and related materials must be received by the Coast Guard on or before May 29, 2012.

ADDRESSES: You may submit comments identified by docket number USCG–2012–0072 using any one of the following methods:

(1) *Federal eRulemaking Portal: http://www.regulations.gov.*

(2) *Fax:* 202–493–2251.

(3) *Mail:* Docket Management Facility (M–30), U.S. Department of Transportation, West Building Ground Floor, Room W12–140, 1200 New Jersey Avenue SE., Washington, DC 20590–0001.

(4) *Hand delivery:* Same as mail address above, between 9 a.m. and 5 p.m., Monday through Friday, except Federal holidays. The telephone number is 202–366–9329.

To avoid duplication, please use only one of these four methods. See the ''Public Participation and Request for Comments'' portion of the **SUPPLEMENTARY INFORMATION** section below for instructions on submitting comments.

FOR FURTHER INFORMATION CONTACT: If you have questions on this proposed rule, call or email ENS Benjamin Nessia, Response Department, Marine Safety Unit Toledo, Coast Guard; telephone (419) 418–6040, email *Benjamin.B.Nessia@uscg.mil.* If you have questions on viewing or submitting material to the docket, call Renee V. Wright, Program Manager, Docket Operations, telephone 202–366–9826.

SUPPLEMENTARY INFORMATION:

Public Participation and Request for Comments

We encourage you to participate in this rulemaking by submitting comments and related materials. All comments received will be posted without change to *http://www.regulations.gov* and will include any personal information you have provided.

Submitting Comments

If you submit a comment, please include the docket number for this rulemaking (USCG–2012–0072), indicate the specific section of this document to which each comment applies, and provide a reason for each suggestion or recommendation. You may submit your comments and material online (via *http://www.regulations.gov*) or by fax, mail or hand delivery, but please use only one of these means. If you submit a comment submitted online via *www.regulations.gov,* it will be considered received by the Coast Guard when you successfully transmit the comment. If you fax, hand deliver, or mail your comment, it will be considered as having been received by the Coast Guard when it is received at the Docket Management Facility. We recommend that you include your name and a mailing address, an email address, or a telephone number in the body of your document so that we can contact you if we have questions regarding your submission.

To submit your comment online, go to *http://www.regulations.gov,* click on the ''submit a comment'' box, which will then become highlighted in blue. In the ''Document Type'' drop down menu select ''Proposed Rule'' and insert ''USCG–2012–0072'' in the ''Keyword'' box. If you submit your comments by mail or hand delivery, submit them in an unbound format, no larger than 8½ by 11 inches, suitable for copying and electronic filing. If you submit comments by mail and would like to know that they reached the Facility, please enclose a stamped, self-addressed postcard or envelope. We will consider all comments and material received during the comment period and may change the rule based on your comments.

Viewing Comments and Documents

To view comments, as well as documents mentioned in this preamble as being available in the docket, go to *http://www.regulations.gov,* click on the ''read comments'' box, which will then become highlighted in blue. In the ''Keyword'' box insert ''USCG–2012–0072'' and click ''Search.'' Click the ''Open Docket Folder'' in the ''Actions'' column. You may also visit the Docket Management Facility in Room W12–140 on the ground floor of the Department of Transportation West Building, 1200 New Jersey Avenue SE., Washington, DC 20590, between 9 a.m. and 5 p.m., Monday through Friday, except Federal holidays. We have an agreement with the Department of Transportation to use the Docket Management Facility.

Privacy Act

Anyone can search the electronic form of comments received into any of our dockets by the name of the individual submitting the comment (or signing the comment, if submitted on behalf of an association, business, labor union, etc.). You may review a Privacy Act notice regarding our public dockets in the January 17, 2008 issue of the **Federal Register** (73 FR 3316).

Public Meeting

We do not now plan to hold a public meeting, but you may submit a request for one using one of the four methods specified under **ADDRESSES**. Please explain why you believe a public meeting would be beneficial. If we determine that one would aid this rulemaking, we will hold one at a time and place announced by a later notice in the **Federal Register**.

Background and Purpose

The organization Endurance Sports Productions is sponsoring a triathlon: A bike, swim and run event. The swim portion of the event will take place in Lake Erie. The participants will begin by jumping off the ferry boat JET EXPRESS II at the designated position, then swim to the dedicated position on shore. This swim portion will take place on September 9, 2012 at approximately 8 a.m. and will last about an hour. The Captain of the Port Detroit has determined that the swim portion of the event will pose certain public hazards. Such hazards include obstructions to the waterway that may cause marine casualties and vessels colliding with swimmers that may cause death or serious bodily harm.

Discussion of Proposed Rule

With aforementioned hazards in mind, the Captain of the Port Detroit believes that a temporary safety zone is necessary to ensure the safety of participants and vessels during the practice, the half triathlon, and the triathlon events. This proposed temporary safety zone would be effective and enforced from 8 a.m. until 10 a.m. on September 9, 2012. The safety zone would encompass all waters of Lake Erie within a direct line from 41–33′–49″ N, 082–47–8″ W to 41–33′–25″ N, 82–48′–8″ W and 15 yards on either side of direct line. All geographic coordinates are North American Datum of 1983 (NAD 83).

All persons and vessels would have to comply with the instructions of the Coast Guard Captain of the Port or the designated on scene patrol personnel. Entry into, transiting, or anchoring within the safety zone would be prohibited unless authorized by the Captain of the Port Detroit or his designated on scene representative. The Captain of the Port or his designated on scene representative may be contacted via VHF Channel 16.

Regulatory Analyses

We developed this proposed rule after considering numerous statutes and executive orders related to rulemaking. Below we summarize our analyses based on 13 of these statutes or executive orders.

Regulatory Planning and Review

This proposed rule is not a significant regulatory action under section 3(f) of Executive Order 12866, Regulatory Planning and Review, and does not require an assessment of potential costs and benefits under section 6(a)(3) of that Order. The Office of Management and Budget has not reviewed it under that Order. It is not ''significant'' under the regulatory policies and procedures of the Department of Homeland Security (DHS). We conclude that this proposed rule is not a significant regulatory action because we anticipate that it will have minimal impact on the economy, will not interfere with other agencies, will not adversely alter the budget of any grant or loan recipients, and will not raise any novel legal or policy issues. The safety zone created by this proposed rule will be relatively small and enforced for a relatively short time. Also, the safety zone is designed to minimize its impact on navigable waters. Furthermore, the safety zone has been designed to allow vessels to transit around it. Thus, restrictions on vessel movement within that particular area are expected to be minimal. Under certain conditions, moreover, vessels may still transit through the safety zone when permitted by the Captain of the Port.

Small Entities

Under the Regulatory Flexibility Act (5 U.S.C. 601–612), we have considered whether this proposed rule would have a significant economic impact on a substantial number of small entities. The term ''small entities'' comprises small businesses, not-for-profit organizations that are independently owned and operated and are not dominant in their fields, and governmental jurisdictions with populations of less than 50,000.

The Coast Guard certifies under 5 U.S.C. 605(b) that this proposed rule would not have a significant economic impact on a substantial number of small entities.

This proposed rule would affect the following entities, some of which may be small entities: The owners or operators of vessels intending to transit or anchor in the above portion of the Sandusky Bay of Lake Erie near Lakeside, OH between 8 a.m. and 10 a.m. on September 9, 2012.

This proposed safety zone will not have a significant economic impact on a substantial number of small entities for the following reasons: This proposed rule will be in effect for only approximately two hours. Also, in the event that this temporary safety zone affects shipping, commercial vessels may request permission from the Captain of the Port Detroit to transit through the safety zone. Additionally, the Coast Guard will give advanced notice to the public via a local Broadcast Notice to Mariners that the regulation is in effect. Moreover, the COTP will suspend enforcement of the safety zone if the event for which the zone is established ends earlier than the expected time.

If you think that your business, organization, or governmental jurisdiction qualifies as a small entity and that this proposed rule would have a significant economic impact on it, please submit a comment (see **ADDRESSES**) explaining why you think it qualifies and how and to what degree this rule would economically affect it.

Assistance for Small Entities

Under section 213(a) of the Small Business Regulatory Enforcement Fairness Act of 1996 (Pub. L. 104–121), we want to assist small entities in understanding this proposed rule so that they can better evaluate its effects on them and participate in the rulemaking. If this proposed rule would affect your small business, organization, or governmental jurisdiction and you have

questions concerning its provisions or options for compliance, please contact ENS Benjamin Nessia, Response Department, Marine Safety Unit Toledo, Coast Guard; telephone (419) 418–6040, email *Benjamin.B.Nessia@uscg.mil.* The Coast Guard will not retaliate against small entities that question or complain about this proposed rule or any policy or action of the Coast Guard.

Collection of Information

This proposed rule would call for no new collection of information under the Paperwork Reduction Act of 1995 (44 U.S.C. 3501–3520).

Federalism

A rule has implications for federalism under Executive Order 13132, Federalism, if it has a substantial direct effect on State or local governments and would either preempt State law or impose a substantial direct cost of compliance on them. We have analyzed this proposed rule under that Order and have determined that it does not have implications for federalism.

Unfunded Mandates Reform Act

The Unfunded Mandates Reform Act of 1995 (2 U.S.C. 1531–1538) requires Federal agencies to assess the effects of their discretionary regulatory actions. In particular, the Act addresses actions that may result in the expenditure by a State, local, or tribal government, in the aggregate, or by the private sector of $100,000,000 (adjusted for inflation) or more in any one year. Though this proposed rule would not result in such an expenditure, we do discuss the effects of this proposed rule elsewhere in this preamble.

Taking of Private Property

This proposed rule would not affect a taking of private property or otherwise have taking implications under Executive Order 12630, Governmental Actions and Interference with Constitutionally Protected Property Rights.

Civil Justice Reform

This proposed rule meets applicable standards in sections 3(a) and 3(b)(2) of Executive Order 12988, Civil Justice Reform, to minimize litigation, eliminate ambiguity, and reduce burden.

Protection of Children

We have analyzed this proposed rule under Executive Order 13045, Protection of Children from Environmental Health Risks and Safety Risks. This rule is not an economically significant rule and would not create an environmental risk to health or risk to safety that might disproportionately affect children.

Indian Tribal Governments

This proposed rule does not have tribal implications under Executive Order 13175, Consultation and Coordination with Indian Tribal Governments, because it does not have a substantial direct effect on one or more Indian tribes, on the relationship between the Federal Government and Indian tribes, or on the distribution of power and responsibilities between the Federal Government and Indian tribes.

Energy Effects

We have analyzed this proposed rule under Executive Order 13211, Actions Concerning Regulations That Significantly Affect Energy Supply, Distribution, or Use. We have determined that it is not a ''significant energy action'' under that order because it is not a ''significant regulatory action'' under Executive Order 12866 and is not likely to have a significant adverse effect on the supply, distribution, or use of energy. The Administrator of the Office of Information and Regulatory Affairs has not designated it as a significant energy action. Therefore, it does not require a Statement of Energy Effects under Executive Order 13211.

Technical Standards

The National Technology Transfer and Advancement Act (NTTAA) (15 U.S.C. 272 note) directs agencies to use voluntary consensus standards in their regulatory activities unless the agency provides Congress, through the Office of Management and Budget, with an explanation of why using these standards would be inconsistent with applicable law or otherwise impractical. Voluntary consensus standards are technical standards (e.g., specifications of materials, performance, design, or operation; test methods; sampling procedures; and related management systems practices) that are developed or adopted by voluntary consensus standards bodies.

This proposed rule does not use technical standards. Therefore, we did not consider the use of voluntary consensus standards.

Environment

We have analyzed this proposed rule under Department of Homeland Security Management Directive 023–01 and Commandant Instruction M16475.lD, which guide the Coast Guard in complying with the National Environmental Policy Act of 1969 (NEPA) (42 U.S.C. 4321–4370f), and have made a preliminary determination that this action is one of a category of actions that do not individually or cumulatively have a significant effect on the human environment. A preliminary environmental analysis checklist supporting this determination is available in the docket where indicated under **ADDRESSES**. This proposed rule involves the establishment of a safety zone, and thus, paragraph (34)(g) of the Instruction applies. We seek any comments or information that may lead to the discovery of a significant environmental impact from this proposed rule.

List of Subjects in 33 CFR Part 165

Harbors, Marine safety, Navigation (water), Reporting and recordkeeping requirements, Security measures, Waterways.

For the reasons discussed in the preamble, the Coast Guard proposes to amend 33 CFR part 165 as follows:

PART 165—REGULATED NAVIGATION AREAS AND LIMITED ACCESS AREAS

1. The authority citation for part 165 continues to read as follows:

Authority: 33 U.S.C. 1231; 46 U.S.C. Chapters 701, 3306, 3703; 50 U.S.C. 191, 195; 33 CFR 1.05–1, 6.04–1, 6.04–6, and 160.5; Pub. L. 107–295, 116 Stat. 2064; Department of Homeland Security Delegation No. 0170.1.

2. Add § 165.T09–0072 as follows:

§ 165.T09–0072 Safety Zone; Jet Express Triathlon, Sandusky Bay, Lake Erie, Lakeside, OH.

(a) *Location.* The following area is a temporary safety zone: All waters of Lake Erie within a direct line from 41–33′–49″ N 082–47′–8″ W to 41–33′–25″ N 82–48′–8″ W and 15 yards on either side of direct line. All geographic coordinates are North American Datum of 1983 (NAD 83).

(b) *Effective and Enforcement Period.* This regulation will be enforced from 8 a.m. until 10 a.m. on September 9, 2012.

(c) *Regulations.*

(1) In accordance with the general regulations in section 165.23 of this part, entry into, transiting, or anchoring within this safety zone is prohibited unless authorized by the Captain of the Port Detroit, or his designated on-scene representative.

(2) This safety zone is closed to all vessel traffic, except as may be permitted by the Captain of the Port Detroit or his designated on-scene representative.

(3) The ''on-scene representative'' of the Captain of the Port Detroit is any Coast Guard commissioned, warrant, or

petty officer who has been designated by the Captain of the Port to act on his behalf. The on-scene representative of the Captain of the Port Detroit will be aboard either a Coast Guard or Coast Guard Auxiliary vessel. The Captain of the Port Detroit or his designated on scene representative may be contacted via VHF Channel 16.

(4) Vessel operators desiring to enter or operate within the safety zone shall contact the Captain of the Port Detroit or his on-scene representative to obtain permission to do so. Vessel operators given permission to enter or operate in the safety zone must comply with all directions given to them by the Captain of the Port Detroit or his on-scene representative.

Dated: March 29, 2012.

J.E. Ogden,

Captain, U.S. Coast Guard, Captain of the Port Detroit.

[FR Doc. 2012–10021 Filed 4–25–12; 8:45 am]

BILLING CODE 9110–04–P

ENVIRONMENTAL PROTECTION AGENCY

40 CFR Part 52

[EPA–R03–OAR–2012–0024; FRL–9664–3]

Approval and Promulgation of Air Quality Implementation Plans; Virginia; Removal of Transcontinental Gas Pipe Line Corporation Permit From State Implementation Plan

AGENCY: Environmental Protection Agency (EPA).

ACTION: Proposed rule.

SUMMARY: EPA proposes to approve the State Implementation Plan (SIP) revision submitted by the Commonwealth of Virginia removing the operating permit for the Transcontinental Gas Pipe Line Corporation (Transco) Station 175 from the Virginia SIP. In the Final Rules section of this **Federal Register**, EPA is approving the State's SIP submittal as a direct final rule without prior proposal because the Agency views this as a noncontroversial submittal and anticipates no adverse comments. A detailed rationale for the approval is set forth in the direct final rule. If no adverse comments are received in response to this action, no further activity is contemplated. If EPA receives adverse comments, the direct final rule will be withdrawn and all public comments received will be addressed in a subsequent final rule based on this proposed rule. EPA will not institute a second comment period. Any parties interested in commenting on this action should do so at this time.

DATES: Comments must be received in writing by May 29, 2012.

ADDRESSES: Submit your comments, identified by Docket ID Number EPA–R03–OAR–2012–0024 by one of the following methods:

A. *www.regulations.gov.* Follow the on-line instructions for submitting comments.

B. *Email: fernandez.cristina@epa.gov.*

C. *Mail:* EPA–R03–OAR–2012–0024, Cristina Fernandez, Associate Director, Office of Air Quality Planning, Mailcode 3AP30, U.S. Environmental Protection Agency, Region III, 1650 Arch Street, Philadelphia, Pennsylvania 19103.

D. *Hand Delivery:* At the previously-listed EPA Region III address. Such deliveries are only accepted during the Docket's normal hours of operation, and special arrangements should be made for deliveries of boxed information.

Instructions: Direct your comments to Docket ID No. EPA–R03–OAR–2012–0024. EPA's policy is that all comments received will be included in the public docket without change, and may be made available online at *www.regulations.gov,* including any personal information provided, unless the comment includes information claimed to be Confidential Business Information (CBI) or other information whose disclosure is restricted by statute. Do not submit information that you consider to be CBI or otherwise protected through *www.regulations.gov* or email. The *www.regulations.gov* Web site is an ''anonymous access'' system, which means EPA will not know your identity or contact information unless you provide it in the body of your comment. If you send an email comment directly to EPA without going through *ww.regulations.gov,* your email address will be automatically captured and included as part of the comment that is placed in the public docket and made available on the Internet. If you submit an electronic comment, EPA recommends that you include your name and other contact information in the body of your comment and with any disk or CD–ROM you submit. If EPA cannot read your comment due to technical difficulties and cannot contact you for clarification, EPA may not be able to consider your comment. Electronic files should avoid the use of special characters, any form of encryption, and be free of any defects or viruses.

Docket: All documents in the electronic docket are listed in the *www.regulations.gov* index. Although listed in the index, some information is not publicly available, i.e., CBI or other information whose disclosure is restricted by statute. Certain other material, such as copyrighted material, is not placed on the Internet and will be publicly available only in hard copy form. Publicly available docket materials are available either electronically in *www.regulations.gov* or in hard copy during normal business hours at the Air Protection Division, U.S. Environmental Protection Agency, Region III, 1650 Arch Street, Philadelphia, Pennsylvania 19103. Copies of the State submittal are available at the Virginia Department of Environmental Quality, 629 East Main Street, Richmond, Virginia 23219.

FOR FURTHER INFORMATION CONTACT: Marilyn Powers, (215) 814–2308, or by email at *powers.marilyn@epa.gov.*

SUPPLEMENTARY INFORMATION: For further information, please see the information provided in the direct final action, with the same title, that is located in the ''Rules and Regulations'' section of this **Federal Register**. publication.

Dated: April 12, 2012.

W.C. Early,

Acting, Regional Administrator, Region III.

[FR Doc. 2012–9974 Filed 4–25–12; 8:45 am]

BILLING CODE 6560–50–P

ENVIRONMENTAL PROTECTION AGENCY

40 CFR Part 52

[EPA–R09–OAR–2012–0266; FRL–9665–4]

Revisions to the California State Implementation Plan, San Joaquin Valley Unified Air Pollution Control District

AGENCY: Environmental Protection Agency (EPA).

ACTION: Proposed rule.

SUMMARY: EPA is proposing to approve revisions to the San Joaquin Valley Unified Air Pollution Control District (SJVUAPCD) portion of the California State Implementation Plan (SIP). These revisions concern oxides of nitrogen (NO_X) from solid fuel fired boilers, steam generators and process heaters. We are approving a local rule that regulates these emission sources under the Clean Air Act as amended in 1990 (CAA or the Act). We are taking comments on this proposal and plan to follow with a final action.

DATES: Any comments must arrive by May 29, 2012.

ADDRESSES: Submit comments, identified by docket number EPA–R09–

OAR–2012–0266, by one of the following methods:

1. *Federal eRulemaking Portal: www.regulations.gov.* Follow the on-line instructions.

2. *Email: steckel.andrew@epa.gov.*

3. *Mail or deliver:* Andrew Steckel (Air-4), U.S. Environmental Protection Agency Region IX, 75 Hawthorne Street, San Francisco, CA 94105–3901.

Instructions: All comments will be included in the public docket without change and may be made available online at *www.regulations.gov,* including any personal information provided, unless the comment includes Confidential Business Information (CBI) or other information whose disclosure is restricted by statute. Information that you consider CBI or otherwise protected should be clearly identified as such and should not be submitted through *www.regulations.gov* or email. *www.regulations.gov* is an ''anonymous access'' system, and EPA will not know your identity or contact information unless you provide it in the body of your comment. If you send email directly to EPA, your email address will be automatically captured and included as part of the public comment. If EPA cannot read your comment due to technical difficulties and cannot contact you for clarification, EPA may not be able to consider your comment.

Docket: Generally, documents in the docket for this action are available electronically at *www.regulations.gov* and in hard copy at EPA Region IX, 75 Hawthorne Street, San Francisco, California. While all documents in the docket are listed at *www.regulations.gov,* some information may be publicly available only at the hard copy location (e.g., copyrighted material, large maps), and some may not be publicly available in either location (e.g., CBI). To inspect the hard copy materials, please schedule an appointment during normal business hours with the contact listed in the **FOR FURTHER INFORMATION CONTACT** section.

FOR FURTHER INFORMATION CONTACT: Andrew Steckel, EPA Region IX, (415) 947–4115, *steckel.andrew@epa.gov.*

SUPPLEMENTARY INFORMATION: Throughout this document, ''we,'' ''us'' and ''our'' refer to EPA.

Table of Contents

I. The State's Submittal
A. What rule did the State submit?
B. Are there other versions of this rule?
C. What is the purpose of the submitted rule?
II. EPA's Evaluation
A. How is EPA evaluating the rule?
B. Does the rule meet the evaluation criteria?
C. EPA Recommendations To Further Improve the Rule
III. EPA's Proposed Action
IV. Statutory and Executive Order Reviews

I. The State's Submittal

A. What rule did the State submit?

Table 1 identifies the rule addressed by this proposal with the date that it was adopted by the local air agency and submitted by the California Air Resources Board (CARB).

TABLE 1—SUBMITTED RULE

Local agency	Rule No.	Rule title	Amended	Submitted
SJVUAPCD	4352	Solid Fuel Fired Boilers, Steam Generators and Process Heaters	12/15/11	02/23/12

On March 13, 2012, EPA determined that the submittal for SJVUAPCD Rule 4352 met the completeness criteria in 40 CFR Part 51 Appendix V, which must be met before formal EPA review.

B. Are there other versions of this rule?

We finalized a limited approval and limited disapproval of an earlier version of Rule 4352 on October 1, 2010 (75 FR 60623). That action incorporated Rule 4352 into the California SIP, including those provisions identified as deficient.

C. What is the purpose of the submitted rule?

NO_X emissions help produce ground-level ozone, smog and particulate matter, which harm human health and the environment. Section 110(a) of the CAA requires States to submit regulations that control NO_X emissions. Rule 4352 limits NO_X and carbon monoxide (CO) emissions from solid fuel fired boilers, steam generators and process heaters. EPA's technical support document (TSD) has more information about this rule.

II. EPA's Evaluation

A. How is EPA evaluating the rule?

Generally, SIP rules must be enforceable (see section 110(a) of the Act), must require Reasonably Available Control Technology (RACT) for each category of sources covered by a Control Techniques Guidelines (CTG) document and each major source of NO_X or VOC emissions in ozone nonattainment areas classified as moderate or above (see CAA sections 182(b)(2) and 182(f)), and must not relax existing requirements (see CAA sections 110(l) and 193). Section 172(c)(1) of the Act also requires implementation of all reasonably available control measures (RACM) as expeditiously as practicable in nonattainment areas.

Because the San Joaquin Valley (SJV) area is designated nonattainment for the 1997 and 2006 fine particulate matter ($PM_{2.5}$) National Ambient Air Quality Standards (NAAQS) and for the 1-hour and 8-hour ozone NAAQS (see 40 CFR 81.305), the RACM requirement in CAA section 172(c)(1) applies to this area.[1] In addition, because SJV is classified as ''extreme'' nonattainment for the 1-hour and 8-hour ozone NAAQS (see 40 CFR 81.305), the specific RACT requirement in CAA sections 182(b)(2) and (f) applies to all major sources of NO_X or VOC in the SJV area. We are evaluating Rule 4352 for compliance with the NO_X RACT requirement in CAA section 182 because the rule applies to major NO_X emission sources.

Guidance and policy documents that we use to evaluate enforceability and RACT requirements consistently include the following:

1. ''State Implementation Plans; General Preamble for the Implementation of Title I of the Clean Air Act Amendments of 1990,'' 57 FR 13498 (April 16, 1992) (the General Preamble) and 57 FR 18070 (April 28, 1992) (Appendices).

2. ''State Implementation Plans; Nitrogen Oxides Supplement to the General Preamble; Clean Air Act Amendments of 1990 Implementation of Title I; Proposed Rule,'' 57 FR 55620, November 25, 1992 (the NO_X Supplement).

2. ''Issues Relating to VOC Regulation Cutpoints, Deficiencies, and Deviations,'' EPA, May 25, 1988 (the Bluebook).

[1] EPA generally takes action on a RACM demonstration as part of our action on the State's attainment demonstration for the relevant NAAQS, based on an evaluation of the control measures submitted as a whole and their overall potential to advance the applicable attainment date in the area. *See, e.g.,* 76 FR 69896 (November 9, 2011) (final rule partially approving and partially disapproving $PM_{2.5}$ attainment plan for SJV); 77 FR 12652 (March 1, 2012) (final rule approving 8-hour ozone attainment plan for SJV).

3. ''Guidance Document for Correcting Common VOC & Other Rule Deficiencies,'' EPA Region 9, August 21, 2001 (the Little Bluebook).

4. ''Determination of Reasonably Available Control Technology and Best Available Retrofit Control Technology for Industrial, Institutional, and Commercial Boilers, Steam Generators, and Process Heaters,'' CARB, July 18, 1991.

5. ''Alternative Control Techniques Document—NO_X Emissions from Industrial/Commercial/Institutional (ICI) Boilers,'' US EPA 453/R–94–022, March 1994.

6. ''Alternative Control Techniques Document— NO_X Emissions from Utility Boilers,'' US EPA 452/R–93–008, March 1994.

B. Does the rule meet the evaluation criteria?

We believe this rule is consistent with the relevant policy and guidance regarding enforceability, RACT, and SIP relaxations. The TSD has more information on our evaluation.

On January 10, 2012, EPA partially approved and partially disapproved the RACT SIP submitted by California on June 18, 2009 for the SJV extreme ozone nonattainment area (2009 RACT SIP), based in part on our conclusion that the State had not fully satisfied CAA section 182 RACT requirements for solid fuel fired boiler operations. See 77 FR 1417, 1425 (January 10, 2012). Final approval of Rule 4352 would satisfy California's obligation to implement RACT under CAA section 182 for this source category for the 1-hour ozone and 1997 8-hour ozone NAAQS and thereby terminate both the sanctions clocks and the Federal Implementation Plan (FIP) clock associated with this rule.

C. EPA Recommendations To Further Improve the Rule

The TSD describes additional rule revisions that we recommend for the next time the local agency modifies the rule.

III. EPA's Proposed Action

Because EPA believes the submitted rule fulfills all applicable requirements and corrects all deficiencies identified in our October 1, 2010 action, we are proposing to fully approve it under section 110(k)(3) of the Act. We will accept comments from the public on this proposal for the next 30 days.

IV. Statutory and Executive Order Reviews

Under the Clean Air Act, the Administrator is required to approve a SIP submission that complies with the provisions of the Act and applicable Federal regulations. 42 U.S.C. 7410(k); 40 CFR 52.02(a). Thus, in reviewing SIP submissions, EPA's role is to approve State choices, provided that they meet the criteria of the Clean Air Act. Accordingly, this proposed action merely proposes to approve State law as meeting Federal requirements and does not impose additional requirements beyond those imposed by State law. For that reason, this proposed action:

- Is not a ''significant regulatory action'' subject to review by the Office of Management and Budget under Executive Order 12866 (58 FR 51735, October 4, 1993);
- Does not impose an information collection burden under the provisions of the Paperwork Reduction Act (44 U.S.C. 3501 *et seq.*);
- Is certified as not having a significant economic impact on a substantial number of small entities under the Regulatory Flexibility Act (5 U.S.C. 601 *et seq.*);
- Does not contain any unfunded mandate or significantly or uniquely affect small governments, as described in the Unfunded Mandates Reform Act of 1995 (Pub. L. 104–4);
- does not have Federalism implications as specified in Executive Order 13132 (64 FR 43255, August 10, 1999);
- Is not an economically significant regulatory action based on health or safety risks subject to Executive Order 13045 (62 FR 19885, April 23, 1997);
- Is not a significant regulatory action subject to Executive Order 13211 (66 FR 28355, May 22, 2001);
- Is not subject to requirements of Section 12(d) of the National Technology Transfer and Advancement Act of 1995 (15 U.S.C. 272 note) because application of those requirements would be inconsistent with the Clean Air Act; and
- Does not provide EPA with the discretionary authority to address disproportionate human health or environmental effects with practical, appropriate, and legally permissible methods under Executive Order 12898 (59 FR 7629, February 16, 1994).

In addition, this proposed action does not have tribal implications as specified by Executive Order 13175 (65 FR 67249, November 9, 2000), because the SIP is not approved to apply in Indian country located in the State, and EPA notes that it will not impose substantial direct costs on tribal governments or preempt tribal law.

List of Subjects in 40 CFR Part 52

Environmental protection, Air pollution control, Intergovernmental relations, Nitrogen dioxide, Ozone, Particulate matter, Reporting and recordkeeping requirements.

Authority: 42 U.S.C. 7401 *et seq.*

Dated: April 13, 2012.

Jared Blumenfeld,

Regional Administrator, Region IX.

[FR Doc. 2012–10076 Filed 4–25–12; 8:45 am]

BILLING CODE 6560–50–P

DEPARTMENT OF TRANSPORTATION

Pipeline and Hazardous Materials Safety Administration

49 CFR Parts 105, 171, 172, 173, 177, 178, and 180

[Docket No. PHMSA–2011–0138 (HM–218G)]

RIN 2137–AE78

Hazardous Materials; Miscellaneous Amendments (RRR)

AGENCY: Pipeline and Hazardous Materials Safety Administration (PHMSA), DOT.

ACTION: Notice of proposed rulemaking (NPRM).

SUMMARY: PHMSA proposes to make miscellaneous amendments to the Hazardous Materials Regulations to update and clarify certain regulatory requirements. These proposed amendments are designed to promote safer transportation practices; eliminate unnecessary regulatory requirements; address a petition for rulemaking; incorporate a special permit into the Hazardous Materials Regulations; facilitate international commerce; and simplify the regulations. Among other provisions, PHMSA is proposing to update various entries in the Hazardous Materials Table and corresponding special provisions, clarify the lab pack requirements for temperature-controlled materials, and revise the training requirements to require that a hazardous material employer must make hazardous materials employee training records available upon request to an authorized official of the Department of Transportation (DOT) or the Department of Homeland Security (DHS).

DATES: Comments must be received by June 25, 2012.

ADDRESSES: You may submit comments by any of the following methods:

- *Federal Rulemaking Portal: http://www.regulations.gov.* Follow the instructions for submitting comments.
- *Fax:* 202–493–2251.
- *Mail:* Dockets Management System; U.S. Department of Transportation, Dockets Operations, M–30, Ground

Floor, Room W12–140, 1200 New Jersey Avenue SE., Washington, DC 20590–0001.

• *Hand Delivery:* To U.S. Department of Transportation, Dockets Operations, M–30, Ground Floor, Room W12–140, 1200 New Jersey Avenue SE., Washington, DC 20590–0001, between 9 a.m. and 5 p.m., Monday through Friday, except Federal holidays.

Instructions: Include the agency name and docket number PHMSA–2011–0138 (HM–218G) or rule identification number (RIN 2137–AE78) for this rulemaking at the beginning of your comment. Note that all comments received will be posted without change to *http://www.regulations.gov* including any personal information provided. If sent by mail, comments must be submitted in duplicate. Persons wishing to receive confirmation of receipt of their comments must include a self-addressed stamped postcard.

Privacy Act: Anyone is able to search the electronic form of any written communications and comments received into any of our dockets by the name of the individual submitting the document (or signing the document, if submitted on behalf of an association, business, labor union, etc.). You may review DOT's complete Privacy Act Statement in the **Federal Register** published on April 11, 2000 (65 FR 19477), or you may visit *http://www.regulations.gov.*

Docket: You may view the public docket through the Internet at *http://www.regulations.gov* or in person at the Docket Operations office at the above address (See **ADDRESSES**).

FOR FURTHER INFORMATION CONTACT: Rob Benedict, Standards and Rulemaking Division, (202) 366–8553, Pipeline and Hazardous Materials Safety Administration, U.S. Department of Transportation, 1200 New Jersey Avenue SE., Washington, DC 20590–0001.

SUPPLEMENTARY INFORMATION:

Contents

I. Background
II. Section-by-Section Review
III. Regulatory Analyses and Notices
A. Statutory/Legal Authority for the Rulemaking
B. Executive Order 12866, Executive Order 13563 and DOT Regulatory Policies and Procedures
C. Executive Order 13132
D. Executive Order 13175
E. Regulatory Flexibility Act, Executive Order 13272, and DOT Procedures and Policies
F. Paperwork Reduction Act
G. Regulatory Identifier Number (RIN)
H. Unfunded Mandates Reform Act
I. Environmental Assessment
J. Privacy Act
K. International Trade Analysis

I. Background

The purpose of this NPRM is to update and clarify existing requirements by incorporating changes into the Hazardous Materials Regulations (HMR; 49 CFR parts 171–180) based on PHMSA's own initiatives. The proposed amendments were identified through an extensive review of the HMR and previously-issued letters of interpretation to the regulated hazardous materials transportation community. In addition, this NPRM proposes to incorporate a widely-held special permit with a longstanding history of safety into the HMR and respond to a petition for rulemaking. To this end, PHMSA is proposing to revise, clarify, and relax certain regulatory requirements.

Specifically, PHMSA is proposing to:

• Permit designated agents for non-residents to submit designation requests by electronic mail in addition to traditional mail.

• Add the Sulphur Institute's (TSI) ''Molten Sulphur Rail Tank Car Guidance'' document to the list of informational materials not requiring incorporation by reference in § 171.7 (Responds to petition for rulemaking P–1581).

• Revise the § 172.101 Hazardous Materials Table (HMT) to correct an error in the transportation requirements for entries listed under the proper shipping name, ''Hydrazine Dicarbonic Acid Diazide.''

• Revise the § 172.101 HMT to remove the entry for ''Zinc ethyl, see Diethylzinc'' which was superseded by proper shipping names adopted in a previous rulemaking.

• Revise special provision 138 in § 172.102 to clarify the lead solubility calculation utilized for classification of material as a Marine Pollutant.

• Remove references to special provisions B72 and B74 in § 172.102. These special provisions were removed in a previous rulemaking; however, twelve entries in the § 172.101 HMT still contain references to these special provisions.

• Revise the shipping paper requirements in § 172.203(e) to permit the phrase ''Residue last contained'' to be placed before or after the basic shipping description sequence, or for rail shipments, directly preceding the proper shipping name in the basic shipping description sequence.

• Update the training recordkeeping requirements in § 172.704 to specify that a hazardous materials (hazmat) employer must make hazmat employee training records available upon request, at a reasonable time and location, to an authorized official of the Department of Transportation or the Department of Homeland Security.

• Clarify that the material of trade exception in § 173.6 may be used when transporting Division 2.1 and 2.2 gases in Dewar flasks.

• Clarify the lab pack provisions in § 173.12 pertaining to temperature-controlled materials contained in a lab pack.

• Clarify the exceptions for external emergency self-closing valves on cargo tank motor vehicles (CTMVs) in § 173.33(g) to specify that external emergency self-closing valves on MC 338 cargo tanks containing cryogenic liquids may remain open during transportation.

• Correct an inadvertent deletion of the § 173.62 packaging requirements for explosives.

• Incorporate special permit DOT SP–13556 into § 173.134, to authorize the transportation by motor vehicle of certain regulated medical wastes, designated as sharps, in non-DOT specification containers fitted into wheeled racks.

• Revise the requirements for cargo air transport of alcoholic beverages § 173.150 to harmonize with the International Civil Aviation Organization's (ICAO) Technical Instructions (TI).

• Clarify the exceptions in § 173.159a for non-spillable batteries secured to skids or pallets.

• Revise § 178.2(c) to clarify the applicability of the notification requirements for packages containing residues.

• Clarify the inspection record requirements in § 180.416 for discharge systems of cargo tanks transporting liquefied compressed gases.

• Clarify the requirements for the Flame Penetration Resistance test required for chemical oxygen generators and certain compressed gases in Appendix E to Part 178.

II. Section-by-Section Review

Part 105

Section 105.40

This section provides the requirements for designated agents for non-residents. In specific instances, such as the approval of fireworks manufactured by a foreign entity, the HMR require non-residents of the United States who perform hazmat operations within the United States to designate a permanent resident of the United States to act as an agent and receive documents on behalf of the non-

resident. As specified in the HMR, non-residents of the United States must prepare a designation notification and file it with PHMSA in accordance with § 105.40.

Currently, the HMR only permits designated agent notification documents to be mailed to the Approvals and Permits Division, Pipeline and Hazardous Materials Safety Administration, Attn: PHH–30, U.S. Department of Transportation, East Building, 1200 New Jersey Avenue SE., Washington, DC 20590–0001, as specified in § 105.40(d). Revising this requirement to allow an agent designation to be transmitted by electronic mail would provide greater regulatory flexibility and align the submission of these documents with the procedures currently in place for the submission of other documents required by PHMSA.

In this NPRM, PHMSA is proposing to amend § 105.40(d) to permit agent designations to be submitted by electronic mail to the special permits or approvals office, as appropriate. The option to submit a completed agent designation to the Approvals and Permits Division by mail would remain unchanged.

Part 171

Section 171.7

The National Technology Transfer and Advancement Act of 1995 (15 U.S.C. 272) directs agencies to use voluntary consensus standards in lieu of government-unique standards except where inconsistent with law or otherwise impractical. Section 171.7 lists all standards incorporated by reference into the HMR and informational materials not requiring incorporation by reference. The informational materials not requiring incorporation by reference are noted throughout the HMR and provide best practices and additional safety measures that while not mandatory, may enhance safety and compliance.

The Sulphur Institute (TSI) represents the sulphur industry in the United States on a variety of issues including the safe transportation of sulphur in commerce. TSI submitted petition P–1581 requesting that PHMSA incorporate by reference TSI's ''Molten Sulphur Tank Rail Car Guidance Document.'' TSI also requested that we amend § 173.24(b)(4) to add the sentence ''Dried residue of molten sulfur on tank cars shall meet the 'Molten Sulphur Rail Car Guidance Document' incorporated by reference in § 171.7.'' TSI recognizes that molten sulphur rail tank cars with formed, solid sulphur obscuring tank car markings, labels, and stencils can present a safety risk. Furthermore, markings and labels with diminished visibility due to molten sulphur residue present an obstacle to not only those responsible for the safe handling of these rail tank cars, but also to first responders who rely on rapid and accurate identification of a material through hazard communication markings in the event of an accident or incident. Further, the presence of an excessive amount of formed, solid sulphur on molten sulphur tank car safety appliances may also lead to decreased effectiveness of safety equipment. To address these issues, TSI has created a document entitled ''Molten Sulphur Rail Tank Car Guidance'' which provides best practices for the safe transport of molten sulphur in rail tank cars.

In this rulemaking, PHMSA proposes to adopt ''Molten Sulphur Rail Tank Car Guidance'' in the list of informational materials not requiring incorporation by reference in § 171.7(b). The inclusion of this document as reference material in the HMR should provide rail shippers of molten sulfur with a greater situational awareness of safe transport conditions for this particular commodity and reduce rail incidents for this hazardous material. In addition, PHMSA proposes to revise the entries for ''Sulfur, Molten'' specified in the § 172.101 HMT to reference special provision ''R1'' and add special provision ''R1'' to the R codes specified in § 172.102(c)(6). This new special provision will recommend the use of the Molten Sulphur Rail Tank Car Guidance document when transporting ''Sulfur, Molten'' residues by rail; however, it will not make its use mandatory. By referencing this document, we believe a greater level of safety may be achieved during the transportation of rail tanks cars which have held or currently hold molten sulfur.

Part 172

Section 172.101

This section contains the HMT and explanatory text for each of the columns in the table. In this NPRM, PHMSA is proposing a number of revisions to the § 172.101 HMT, and the special provisions specified in § 172.102 to clarify the regulations and correct inadvertent errors. Proposed changes to the § 172.101 HMT will appear as an, ''add,'' ''remove,'' or ''revise,'' and include the following:

- Hydrazine dicarbonic acid diazide
- Zinc ethyl, *see* Diethylzinc
- Hydrazine dicarbonic acid diazide
- UN3469 Paint related material, flammable, corrosive *(including paint thinning or reducing compound)*
- UN2484 tert-Butyl isocyanate
- NA2927 Ethyl phosphonothioic dichloride, anhydrous
- NA2845 Ethyl phosphonous dichloride, anhydrous pyrophoric liquid
- NA2927 Ethyl phosphorodichloridate
- NA2845 Methyl phosphonous dichloride, pyrophoric liquid
- UN1831 Sulfuric acid, fuming with 30 percent or more free sulfur trioxide
- NA2448 Sulfur, molten
- UN2448 Sulfur, molten
- UN3492 Toxic by inhalation liquid, corrosive, flammable, n.o.s. *with an inhalation toxicity lower than or equal to 200 ml/m3 and saturated vapor concentration greater than or equal to 500 LC50*
- UN3493 Toxic by inhalation liquid, corrosive, flammable, n.o.s. *with an inhalation toxicity lower than or equal to 1000 ml/m^3 and saturated vapor concentration greater than or equal to 10 LC50*
- UN3488 Toxic by inhalation liquid, flammable, corrosive, n.o.s. *with an inhalation toxicity lower than or equal to 200 ml/m^3 and saturated vapor concentration greater than or equal to 500 LC50*
- UN3489 Toxic by inhalation liquid, flammable, corrosive, n.o.s. *with an inhalation toxicity lower than or equal to 1000 ml/m^3 and saturated vapor concentration greater than or equal to 10 LC50*
- UN3490 Toxic by inhalation liquid, water-reactive, flammable, n.o.s. *with an inhalation toxicity lower than or equal to 200 ml/m^3 and saturated vapor concentration greater than or equal to 500 LC50*
- UN3491 Toxic by inhalation liquid, water-reactive, flammable, n.o.s. *with an inhalation toxicity lower than or equal to 1000 ml/m^3 and saturated vapor concentration greater than or equal to 10 LC50*

On January 28, 2008, PHMSA published a final rule under Docket Number PHMSA–2005–21812 (HM–218D) [73 FR 4699] entitled ''Hazardous Materials; Miscellaneous Amendments.'' In this final rule, one of the two duplicate entries in the § 172.101 HMT for ''Hydrazine, aqueous solution, *with more than 37% hydrazine, by mass''* was intended to be eliminated. Although one entry in the § 172.101 HMT for ''Hydrazine, aqueous solution, *with more than 37% hydrazine, by mass''* was deleted, during the table revisions of this final rule, Columns 5 through 10 for the

entries for ''Hydrazine, aqueous solution, *with more than 37% Hydrazine, by mass''* Packing Groups II and III were inadvertently relocated below the entry ''Hydrazine dicarbonic acid diazide.'' ''Hydrazine dicarbonic acid diazide'' should not have any entries in Columns 5 through 10 as it is forbidden for transport in the HMR. The appearance of these entries in the § 172.101 HMT is confusing and could potentially lead to the mistaken belief that ''Hydrazine dicarbonic acid diazide'' is not a forbidden material, but, rather authorized for transport as a Packing Group II or III material. Therefore, in this NPRM, we are proposing to remove the Packing Group II and III entries for the proper shipping name, ''Hydrazine dicarbonic acid diazide'' in the § 172.101 HMT.

On January 14, 2009, PHMSA published a final rule under Docket Numbers PHMSA–2007–0065 (HM–224D) and PHMSA–2008–0005 (HM–215J) [74 FR 220] entitled ''Hazardous Materials: Revision to Requirements for the Transportation of Batteries and Battery-Powered Devices; and Harmonization with the United Nations Recommendations, International Maritime Dangerous Goods Code, and International Civil Aviation Organization's Technical Instructions.'' Among other revisions, PHMSA removed various specific entries for organometallic compounds and substances in the § 172.101 HMT because these entries were superseded by more appropriate generic entries. As part of these revisions, the entry for ''UN1366 Diethylzinc'' was removed from the § 172.101 HMT. However, the entry for ''Zinc ethyl, see Diethylzinc'' was inadvertently overlooked.

In this NPRM, we are proposing to remove the proper shipping name, ''Zinc ethyl, see Diethylzinc'' since ''UN1366 Diethylzinc'' is no longer listed in the § 172.101 HMT. Individuals offering ''Zinc ethyl'' should choose one of the more appropriate generic entries for organometallic compounds and substances added to the § 172.101 HMT under the January 14, 2009 final rule.

On January 13, 2009, PHMSA, in coordination with the Federal Railroad Administration (FRA), published a final rule under Docket Number FRA–2006–25169 [74 FR 1770], entitled ''Hazardous Materials: Improving the Safety of Railroad Tank Car Transportation of Hazardous Materials.'' Among other revisions, this final rule revised the HMR to improve the crashworthiness protection of railroad tank cars designed to transport poisonous inhalation hazard (PIH) materials. As part of this final rule, the § 172.101 HMT and special provisions specified in § 172.102 were amended to consolidate and update the special provisions applicable to the rail tank car transportation of PIH materials. The revisions to the § 172.101 HMT were for ease of reference only and did not substantively change the requirements applicable to the transportation of PIH materials by railroad tank cars. Specifically, special provisions B71, B72, and B74 were removed from the § 172.101 HMT and § 172.102, while § 172.244(a) was revised to incorporate the language from these eliminated special provisions. However, twelve additional references to special provisions B72, and B74 for selected entries in the § 172.101 HMT were not removed at the time of publication of this final rule. Therefore, in this NPRM, PHMSA proposes to make the following amendments to the Column (7) special provisions of the § 172.101 HMT:

Special provision B72 is removed from Column (7) for the following entries:

UN2484 tert-Butyl isocyanate;

UN3492 Toxic by inhalation liquid, corrosive, flammable, n.o.s. *with an inhalation toxicity lower than or equal to 200 ml/m³ and saturated vapor concentration greater than or equal to 500 LC50;*

UN3488 Toxic by inhalation liquid, flammable, corrosive, n.o.s. *with an inhalation toxicity lower than or equal to 200 ml/m³ and saturated vapor concentration greater than or equal to 500 LC50;* and

UN3490 Toxic by inhalation liquid, water-reactive, flammable, n.o.s. *with an inhalation toxicity lower than or equal to 200 ml/m³ and saturated vapor concentration greater than or equal to 500 LC50.*

Special provision B74 is removed from Column (7) for the following entries:

NA2927 Ethyl phosphonothioic dichloride, anhydrous;

NA2845 Ethyl phosphonous dichloride, anhydrous *pyrophoric liquid;*

NA2927 Ethyl phosphorodichloridate;

NA2845 Methyl phosphonous dichloride, *pyrophoric liquid;*

UN1831 Sulfuric acid, fuming *with 30 percent or more free sulfur trioxide;*

UN3493 Toxic by inhalation liquid, corrosive, flammable, n.o.s. *with an inhalation toxicity lower than or equal to 1000 ml/m³ and saturated vapor concentration greater than or equal to 10 LC50;*

UN3489 Toxic by inhalation liquid, flammable, corrosive, n.o.s. *with an inhalation toxicity lower than or equal to 1000 ml/m³ and saturated vapor concentration greater than or equal to 10 LC50;* and

UN3491 Toxic by inhalation liquid, water-reactive, flammable, n.o.s. *with an inhalation toxicity lower than or equal to 1000 ml/m³ and saturated vapor concentration greater than or equal to 10 LC50.*

In addition, as discussed above, PHMSA proposes to revise the entries for ''Sulfur, Molten'' specified in the § 172.101 HMT to reference special provision ''R1.''

Section 172.102

This section contains the special provisions listed in column (7) of the § 172.101 HMT. These special provisions contain packaging provisions, prohibitions, exceptions from requirements for particular quantities or forms of materials, and requirements or prohibitions applicable to specific modes of transportation. In this NPRM, PHMSA is proposing revisions to the special provisions specified in § 172.102 to clarify the regulations and correct inadvertent errors.

As discussed above, PHMSA proposes to add special provision ''R1'' to the R codes specified in § 172.102(c)(6). This new special provision will reference the ''Molten Sulphur Rail Tank Car Guidance'' document as a resource for best practices for the cleaning of tank cars containing ''Sulfur, Molten.'' By referencing this document, we believe a greater level of safety can be achieved when transporting rail tanks cars which have held or currently hold molten sulfur.

In this rulemaking, we propose to revise special provision 138 to harmonize the HMR with the International Maritime Dangerous Goods (IMDG) code and to clarify that the solubility calculation provided in special provision 138 should be applied when determining when to utilize the lead compounds, soluble n.o.s. entry in the List of Marine Pollutants found in § 172.101, Appendix B.

The defining criteria for the solubility of a lead compound is specified in special provision 138 in § 172.102(c)(1). Special provision 138 specifies that a lead compound is soluble when it exhibits a solubility greater than 5 percent after being mixed with a 0.07 M (molar concentration) of hydrochloric acid and is stirred for one hour. If the material exhibits a solubility of 5 percent or less after the test is completed, it is considered insoluble and not subject to the HMR. The IMDG Code identifies ''Lead compounds, soluble, n.o.s.,'' in Columns 4 and 6 of

the Dangerous Goods List (DGL; Chapter 3.2) as a marine pollutant, and simultaneously refers to the definition for the solubility of lead compounds under Chapter 3.3.1, special provision 199.

On March 5, 1999, the Research and Special Programs Administration (RSPA), the predecessor agency to PHMSA, published a final rule under Docket Number RSPA–98–4185 (HM–215C) [64 FR 10741], entitled ''Harmonization with the United Nations Recommendations, International Maritime Dangerous Goods Code, and International Civil Aviation Organization's Technical Instructions.'' In HM–215C, when PHMSA incorporated the IMDG code's definition for ''Lead compounds, soluble, n.o.s.,'' in special provision 138 into the HMR, our intent was to mirror special provision 199 of the IMDG code and to permit the definition provided in this special provision to apply to both the ''lead compounds, soluble n.o.s.'' entry in the § 172.101 HMT and the entry in the List of marine pollutants in § 172.101, Appendix B. However, as adopted in the HMR, special provision 138 is unclear with regard to whether this criteria applies to marine pollutants.

On December 29, 2006, PHMSA published a final rule under Docket Number PHMSA–2006–25476 (HM–215I) [71 FR 78596], entitled ''Harmonization with the United Nations Recommendations, International Maritime Dangerous Goods Code, and International Civil Aviation Organization's Technical Instructions.'' The HM–215I final rule revised the HMR to maintain alignment with international standards by incorporating various amendments, including changes to proper shipping names, hazard classes, packing groups, special provisions, packaging authorizations, air transport quantity limitations, and vessel stowage requirements. These revisions also harmonized the HMR with certain changes to the IMDG Code, the ICAO Technical Instructions, and the United Nations (UN) Recommendations. As part of the revisions in that final rule, new entries, ''UN3469, Paint related material, flammable, corrosive *(including paint thinning or reducing compound),''* PG II, and PG III were added to the § 172.101 HMT. However, these entries were never published in subsequent versions of the HMR. Therefore, in this NPRM, we are proposing to add the entries for ''Paint related material, flammable, corrosive *(including paint thinning or reducing compound)''* UN3469, PG II, and PG III.

Section 172.203

Section 172.202 specifies the requirements that a shipping description of a hazardous material must be indicated on a shipping paper. On December 29, 2006, PHMSA published a final rule under PHMSA–06–25476 (HM–215I) [71 FR 78595] that permitted the continued use for domestic shipments of either one of two shipping description sequences in effect in the HMR on December 31, 2006, until January 1, 2013. Specifically, the HMR authorizes the basic description of a hazardous material to consist of either the identification number first, followed by the proper shipping name, hazard class, and packing group, or as an alternative description sequence, the proper shipping name, hazard class, ID number and packing group. In addition, the basic description described above and specified in paragraphs § 172.202(a)(1)–(4) must be shown in the sequences described with no additional information interspersed. After January 1, 2013, only the basic shipping description sequence consisting of the identification number first, followed by the proper shipping name, hazard class, and packing group (in that order) is authorized.

However, § 172.203 provides allowances for a shipping paper to contain information in addition to the basic shipping description specified in § 172.202. Specifically, § 172.203(e)(1) permits that the shipping paper for a packaging containing the residue of a hazardous material may include the words ''RESIDUE: LAST CONTAINED * * *'' in association with the basic description of the hazardous material last contained in the packaging. Further, the shipping papers for tank cars containing the residue of a hazardous material must include the phrase, ''RESIDUE: LAST CONTAINED * * *'' before the basic description. While the HMR provides such a general provision, various international standards provide more specific guidance on the location of this phrase. Currently the ICAO TI, IMDG Code, and UN Model Regulations require this phrase, if used, to be placed either before or after the basic shipping description.

In this NPRM, PHMSA proposes to revise § 172.203(e)(1) to permit the shipping paper for a packaging containing the residue of a hazardous material to include the words ''RESIDUE: LAST CONTAINED * * *'' before or after the basic shipping description of the hazardous material last contained in the packaging. PHMSA also proposes to remove the language ''in association with'' and replace it with the language ''before or after'' to align with various international standards. This proposed revision harmonizes the HMR with the ICAO TI, IMDG Code and UN Model Regulations.

For rail shipments of tank cars, § 172.203(e)(2) requires that the description on the shipping paper for a tank car containing the residue of a hazardous material must include the phrase, ''RESIDUE: LAST CONTAINED * * *'' before the basic description. Prior to the publication of the HM–215I final rule, the proper shipping name was the first piece of information required in the basic shipping description, and therefore, the phrase, ''RESIDUE: LAST CONTAINED * * *'' preceded the proper shipping name.

Effective January 1, 2013, rail shipments coming from Canada to the United States will be unable to comply with both the current requirements in the HMR for rail tank cars and the Transportation of Dangerous Goods (TDG) requirements. As stated above, after January 1, 2013, the proper shipping name will no longer be permitted to be the first piece of shipping information in the basic shipping description. Subsequently, the phrase, ''RESIDUE: LAST CONTAINED * * *'' will no longer immediately precede the proper shipping name. Furthermore the phrase, ''RESIDUE: LAST CONTAINED * * *'' may not be inserted into the basic description, as § 172.202(b) specifies the basic shipping description may not contain any additional information interspersed in the sequence described in § 172.202(a). Canada's TDG regulations currently permit a residue of hazardous material to be described as ''Residue—Last Contained'' or ''Résidu—dernier contenu,'' followed by the shipping name of the dangerous goods last contained in the means of containment.

Therefore, in this NPRM, PHMSA proposes to revise § 172.203(e)(2) to require the description on the shipping paper for a tank car containing the residue of a hazardous material to include the phrase, ''RESIDUE: LAST CONTAINED * * *'' before or after the basic shipping description, or immediately preceding the proper shipping name. This change maintains the HMR's harmonization with the ICAO TI, IMDG Code and UN Model Regulations while permitting shipments transported to, from or within the United States to remain in compliance with the Canadian TDG shipping paper requirements. This revision will foster commerce between rail systems in the United States and Canada.

Section 172.704

The requirements for hazardous materials training are specified in § 172.704. This section includes a description of the applicability for hazardous materials training, the necessary components of a training program, and the recurrent training and recordkeeping requirements.

Currently, 49 CFR Part 172, Subpart I describes the requirements for security plans. Specifically, §§ 172.802(d) and 172.820(i)(1) require that a copy of the security plan must be maintained and that security plan documentation be made available upon request, at a reasonable time and location, to an authorized official of the Department of Transportation (DOT) or the Department of Homeland Security (DHS).

Similar to the security plan requirements, the training requirements include a recordkeeping component. Specifically, as specified in § 172.704(d), a record of current training, inclusive of the preceding three years, must be created and retained by each hazmat employer for as long as that employee is employed by that employer as a hazmat employee and for 90 days thereafter. However, unlike the security plan documentation, the HMR currently do not stipulate that the training records must be made available upon request to authorized officials of the DOT or DHS.

The Federal hazardous materials transportation law (Federal hazmat law, 49 U.S.C. 5101 *et seq.*) authorizes the Secretary of Transportation to prescribe regulations for the safe transportation of hazardous material in intrastate, interstate, and foreign commerce. The Secretary has delegated this authority to PHMSA. Authority to enforce the HMR has been delegated to the Federal Aviation Administration ''with particular emphasis on the transportation or shipment of hazardous materials by air;'' the Federal Railroad Administration ''with particular emphasis on the transportation or shipment of hazardous materials by railroad;'' PHMSA ''with particular emphasis on the shipment of hazardous materials and the manufacture, fabrication, marking, maintenance, reconditioning, repair or test of multi-modal containers that are represented, marked, certified, or sold for use in the transportation of hazardous materials;'' and the Federal Motor Carrier Safety Administration ''with particular emphasis on the transportation or shipment of hazardous materials by highway'' (CFR part 1, subpart C). In addition, as provided in the Homeland Security Act and as defined in a Memorandum of Agreement between the DHS and the DOT, the United States Coast Guard retained the ability to enforce the HMR with particular emphasis on the transportation or shipment of hazardous materials by vessel. Thus, enforcement of the HMR, including the training regulations, is shared among the DOT operating administrations, United States Coast Guard and DHS, with each placing particular emphasis on their respective authorities.

Federal hazmat law, 49 U.S.C. 5121(b)(2), states that a person subject to this law shall make the records, property, reports, and information available for inspection when the Secretary undertakes an investigation or makes a request. The completion of training in accordance with Subpart H of Part 172 is essential for hazmat employees handling hazardous materials and ensures proper compliance with the HMR resulting in a greater level of safety. The recordkeeping requirements specified in § 172.704(d) allow for hazmat employers and PHMSA personnel to verify that only individuals knowledgeable in the applicable regulations are handling hazardous materials.

In an effort to foster greater compliance with the training requirements specified in Subpart H of Part 172, in this rulemaking we are proposing to revise § 172.704(d) to require that an employer must make hazmat employee training records required by Subpart H of Part 172 available upon request, at a reasonable time and location, to an authorized official of DOT or DHS.

Part 173

Section 173.6

Section 173.6 specifies the exceptions for shipments of materials of trade. A material of trade, is defined in § 171.8 as ''a hazardous material, other than a hazardous waste, that is carried on a motor vehicle for the purpose of protecting the health and safety of the motor vehicle operator or passengers; for the purpose of supporting the operation or maintenance of a motor vehicle (including its auxiliary equipment); or by a private motor carrier (including vehicles operated by a rail carrier) in direct support of a principal business that is other than transportation by motor vehicle.'' Section 173.6 authorizes only specific hazard classes and quantities to utilize the materials of trade exception. A hazardous material that meets the definition of a material of trade and is transported by motor vehicle in conformance with § 173.6 is not subject to any other requirements of the HMR except for those explicitly set forth or referenced in § 173.6.

PHMSA recently received a request for a formal letter of interpretation pertaining to the application of the materials of trade exception (Reference No.: 10–0101). The letter expressed confusion and concern regarding whether the exception would apply to Division 2.1 and Division 2.2 compressed gas transported in Dewar flasks. Dewar flasks are not considered cylinders but are often used to transport Division 2.2 cryogenic liquids. Currently, § 173.6(a)(2) states that a Division 2.1 or 2.2 material in a cylinder with a gross weight not over 100 kg (220 pounds), may be transported as a material of trade provided it meets the definition of a material of trade specified in § 171.8 and all other requirements of § 173.6. As noted in PHMSA's response to this letter, Dewar flasks are permitted to utilize the exception specified in § 173.6 provided they meet all the requirements of that section. PHMSA did not intend to limit the materials of trade exception solely to Division 2.1 or 2.2 materials packaged in cylinders.

PHMSA acknowledges that this requirement needs additional clarification, and believes that increased clarity will help to ensure the proper intended application of the materials of trade exception. Therefore, in this NPRM, we are proposing to modify § 173.6(a)(2) to clarify that Dewar flasks may be transported as materials of trade provided these materials meet all the requirements specified in § 173.6.

Section 173.12

Section 173.12 specifies the exceptions for shipment of waste materials including the requirements for waste packages known as ''lab packs.'' A lab pack, although not specifically defined in § 171.8, is considered a large outer packaging containing small inner packagings that are filled with various compatible laboratory hazardous wastes. In accordance with § 173.12, a lab pack is a combination packaging consisting of a glass inner packaging, not exceeding 4 L (1 gallon) rated capacity, or a metal or plastic inner packaging, not exceeding 20 L (5.3 gallons) rated capacity. Inner packagings containing liquid must be surrounded by a chemically-compatible absorbent material in sufficient quantity to absorb the total liquid contents. These inner packagings are then further packed in specification outer packaging and the completed package must not exceed a gross weight of 205 kilograms. The requirements and regulatory relief

provided for the transportation of waste hazardous materials under the lab pack exception are specified in § 173.12(b) of the HMR.

The requirements for lab packs were adopted in a final rule published under Docket Number HM–181 entitled, ''Performance Oriented Packaging Standards; Changes to Classification, Hazard Communication, Packaging and Handling Requirements Based on UN Standards and Agency Initiative'' and published on December 21, 1990 [55 FR 52402]. These requirements were adopted to align the HMR with regulations on lab packs issued by the Environmental Protection Agency.

The lab packing section was recently amended in a final rule published on May 14, 2010, in the **Federal Register** under Docket Number PHMSA–2009–0289 (HM–233A) [74 FR 53413] entitled, ''Hazardous Materials: Incorporation of Special Permits into Regulations.'' As part of these amendments, certain widely-used and longstanding special permits that had an established safety record were incorporated into the HMR. Special Permit DOT SP–13192 was among these special permits, and it authorized the transport of additional hazardous materials not previously authorized for transport under § 173.12. Specifically, the incorporation of this special permit authorized the transport of waste Division 4.2, Packing Group (PG) I material and Division 5.2 (organic peroxide) material in lab packs.

PHMSA recently received a request for a formal letter of interpretation pertaining to the recent changes of the lab pack exception (Reference No.: 10–0233). The writer expressed confusion and concern regarding whether the amendments of the HM–233A final rule authorized the transportation, as lab packs, of Division 4.1 and Division 5.2 materials that were also required to be temperature-controlled. PHMSA explained that § 173.12(b) permits certain waste materials to be placed in non-specification packagings which conform to the requirements of that section. Furthermore, hazardous materials placed in lab packs are also subject to additional safety control measures designed to mitigate the risks presented by these materials, such as quantity limitations, additional packaging, and segregation requirements. However, these control measures do not eliminate the requirement that lab packs containing materials required to be temperature-controlled must also comply with temperature-control requirements specified in § 173.21(f)(1).

PHMSA acknowledges that this requirement needs additional clarification, and believes that increased clarity will help to ensure that individuals transporting lab packs containing temperature-controlled materials are aware that such packagings are not excepted from other safety measures. Therefore, in this NPRM, we are proposing to modify § 173.12 to clarify that temperature-controlled materials may be transported in lab packs provided these materials also meet the requirements in § 173.21(f)(1).

Section 173.33

Section 173.33 provides the requirements for hazardous materials transported in Cargo Tank Motor Vehicles (CTMVs). This section includes general requirements for CTMVs, as well as more specific requirements for loading, maximum lading pressure, relief systems, and closing valves.

Section 173.33(g) requires each liquid filling and liquid discharge line in a specification MC 338 cargo tank must be provided with a remotely-controlled internal self-closing stop valve except when the MC 338 cargo tank is used to transport argon, carbon dioxide, helium, krypton, neon, nitrogen, and xenon.

The discharge control device requirements for a MC 338 cargo tank are found in § 178.338–11(b) and state that each liquid filling and liquid discharge line must be provided with a shut-off valve located as close to the tank as practicable and, unless the valve is manually operable at the valve, the line must also have a manual shut-off valve.

PHMSA received a request for a formal letter of interpretation regarding the current requirements for MC 338 cargo tanks (Reference No.: 06–0243). According to the request, most vacuum insulated MC 338 cargo tanks operate at temperatures below the reliable operating temperature of available internal self-closing stop valves, and currently no manufacturer builds an internal self-closing stop valve that will operate reliably at temperatures that may reach minus 452 °F. The requestor asked if a MC 338 cargo tank is required to have a remotely-controlled internal self-closing stop valve as specified in § 173.33(g), provided an external stop valve is present in accordance with § 178.338–11(b).

PHMSA does not intend to require a remotely-controlled internal self-closing stop valve if the MC 338 cargo tank already utilizes an external self-closing stop valve to meet the requirements in § 178.338–11(b). Therefore, in this rulemaking, we are proposing to revise the provisions in § 173.33(g) to clarify this exception.

Section 173.62

Section 173.62 specifies packaging requirements for explosives. Specifically, § 173.62 provides a table that specifies the packaging instructions, and corresponding authorized inner, intermediate and outer packagings based on the assigned identification number of the explosive.

In a final rule published on September 13, 2011, under Docket Number PHMSA–2011–0134 (HM–244D) [76 FR 56304], entitled ''Minor Editorial Corrections and Clarifications,'' PHMSA revised § 173.63(c)(5) packaging instruction 130 to authorize the use of aluminum boxes (4B) and natural wood, sift-proof walls boxes (4C2). However, the following language was inadvertently removed from the first column of the packing instruction:

> 2. Subject to approval by the Associate Administrator, large explosive articles, as part of their operational safety and suitability tests, subjected to testing that meets the intentions of Test Series 4 of the UN Manual of Tests and Criteria with successful test results, may be offered for transportation in accordance with the requirements of this subchapter.''

PHMSA did not intend to remove this portion of the packaging instruction and unnecessarily limit the transport of large explosive articles. Therefore, in this NPRM, PHMSA is proposing to revise § 173.63(c)(5) packing instruction 130 to reinstate the language inadvertently removed from the first column of packing instruction 130.

Section 173.134

Section 173.134 provides definitions and exceptions for infectious substances. Paragraph (c)(2) of this section requires a Regulated Medical Waste (RMW) that contains Category B cultures and stocks to be transported on a vehicle ''used exclusively'' to transport RMW. A Category B substance is defined as ''an infectious substance that is not in a form generally capable of causing permanent disability or life-threatening or fatal disease in otherwise healthy humans or animals when exposure to it occurs.''

As amended on July 20, 2011, in a final rule published under Docket Number PHMSA–2009–0151 (HM–218F) [76 FR 43510], entitled ''Miscellaneous Amendments,'' PHMSA revised § 173.134(c)(2) to incorporate the clarifications from a March 19, 2007 letter of interpretation (Ref. No. 07-0057). Specifically, PHMSA specified that the following materials may be

transported on a vehicle used exclusively to transport RMW: (1) Plant and animal waste regulated by the Animal and Plant Health Inspection Service (APHIS); (2) waste pharmaceutical materials; (3) laboratory and recyclable wastes; (4) infectious substances that have been treated to eliminate or neutralize pathogens; (5) forensic materials being transported for final destruction; (6) rejected or recalled health care products; and (7) documents intended for destruction in accordance with Health Insurance Portability and Accountability Act of 1996 (HIPAA) requirements.

In response to the proposals in the HM–218F Notice of Proposed Rulemaking, Stericycle commented that the rationale underlying PHMSA's decision to authorize the transportation of multiple waste streams from medical facilities should also apply to other regulated activities, specifically to those covered under special permit DOT SP–13556, which authorizes the transportation of sharps in specialized containers. At the time of the July 20, 2011 final rule, PHMSA determined that incorporating special permit DOT SP-13556 into the HMR was beyond the scope of that rulemaking, but this issue would be addressed in a future NPRM. We are addressing the issue in this rulemaking. Therefore, in this NPRM, PHMSA is proposing to revise § 173.134(c)(2) to incorporate special permit DOT SP–13556 relating to the transport of regulated medical waste into the HMR.

Specifically, PHMSA is proposing to add the phrase ''sharps containers containing sharps'' to § 173.134(c)(2) to permit certain materials to be transported on a vehicle used exclusively to transport RMW. PHMSA is also proposing to include certain operational controls for shipments of sharps containers that are detailed in special permit DOT SP–13556.

Section 173.150

Section 173.150 provides exceptions from the HMR for certain Class 3 flammable liquid material. Specifically, § 173.150(d) provides exceptions for alcoholic beverages for all modes of transport. An alcoholic beverage (as defined in 27 CFR §§ 4.10 and 5.11) that meets one of three conditions specified in § 173.150(d) is not subject to the requirements of the HMR for a Class 3 flammable liquid material.

Currently, the ICAO Technical Instructions (TI) provide exceptions for alcoholic beverages transported via aircraft in Chapter 3; 3.1.1, Table 3–2, special provision A9 and Chapter 8; 8.1.2 paragraph (l). Specifically, Chapter 3; 3.1.1 states that alcoholic beverages containing not more than 70 percent alcohol by volume, when packaged in receptacles of 5 liters or less are not subject to the ICAO TI when carried by cargo aircraft. In addition, as specified in Chapter 8; 1.1.2 paragraph (l) of the ICAO TI, alcohol beverages with less than 24 percent alcohol by volume or alcohol beverages in retail packaging and alcoholic beverages containing more than 24 percent but not more than 70 percent alcohol by volume in receptacles not exceeding 5 liters are permitted to be carried by passengers or crew in carry-on or checked luggage and are not otherwise subject to the ICAO TI.

Generally, the HMR is harmonized with the ICAO TI with regard to the exceptions provided for alcoholic beverages shipped by passenger carrying and cargo aircraft. However, for cargo aircraft, the HMR does not align with the ICAO TI. For example, as specified in § 173.150(d), the HMR excepts alcoholic beverages in an inner packaging of 5 L (1.3 gallons) or less from regulation regardless of the alcohol percent on cargo aircraft. In contrast, the ICAO TI limits this exception to alcoholic beverages not exceeding 70 percent alcohol by volume. This lack of harmonization can lead to frustration of shipments of these types of materials in international air transport.

Therefore, in this NPRM, we propose to revise the exceptions in § 173.150(d) to harmonize the alcoholic beverages exception via aircraft with the requirements in the ICAO TI and to restructure the exceptions in § 173.150(d) to provide clarity on the requirements for the transport of alcoholic beverages by each mode of transport including passenger carrying and cargo aircraft. Specifically, PHMSA proposes to revise § 173.150(d) by separating the requirements for alcoholic beverages into two subparagraphs: one paragraph pertaining to the transport of alcoholic beverages via motor vehicle, rail, and vessel; and one paragraph pertaining to the transport of alcoholic beverages via air transport. We believe that separating the requirements for alcoholic beverages by mode promotes clarity and allows for the current requirements to remain in effect for motor vehicle, rail and vessel transport while fully harmonizing the air requirements in the HMR with the ICAO TI.

PHMSA proposes to harmonize with the ICAO technical instructions by stipulating that for transport via cargo aircraft, in addition to the current 5 liter limitation in the HMR, the alcohol beverage must not exceed 70 percent alcohol by volume. In addition, we propose to move the requirements for the transport of alcoholic beverages by passenger carrying aircraft by passengers and crew into a standalone sub-subparagraph to improve clarity.

A cost may be incurred by the alcoholic beverage industry for certain high alcohol content (70 percent and up) beverages shipped by cargo aircraft which are currently excepted from the requirements of the HMR. However, PHMSA anticipates this cost to the alcoholic beverage industry will be minimized by three factors. First, due to the non-perishable nature of alcoholic beverages, the vast majority of alcoholic beverages are transported by ground transport or, if required to be exported, by vessel transport. Second, the majority of alcohols and distilled spirits manufactured and transported have a percentage of alcoholic content of, at, or below 40 percent (80 proof). Thus the proposed change would affect only a small segment of high alcohol content liquors. Lastly, in the rare instances these beverages are shipped by air, many air carriers already require compliance with ICAO TI, thus the impact of this harmonization should be minimal. The derived benefit from this revision would be realized from increased harmonization with the ICAO TI and greater hazard communication and packaging standards on high content alcoholic beverages which pose a risk in transport. A summary of the proposed revisions to the requirements for alcoholic beverages can be seen in the table below.

	Current HMR alcohol beverage exceptions	Current ICAO TI alcohol beverage exceptions	Proposed HMR change
Highway	(1) Contains 24 percent or less alcohol by volume. (2) Is in an inner packaging of 5 L (1.3 gallons) or less.	N/A	No change. Restructure the paragraph.

	Current HMR alcohol beverage exceptions	Current ICAO TI alcohol beverage exceptions	Proposed HMR change
	(3) Is a Packing Group III alcoholic beverage in a packaging of 250 L (66 gallons) or less.		
Rail	(1) Contains 24 percent or less alcohol by volume. (2) Is in an inner packaging of 5 L (1.3 gallons) or less. (3) Is a Packing Group III alcoholic beverage in a packaging of 250 L (66 gallons) or less.	N/A	No change. Restructure the paragraph.
Vessel	(1) Contains 24 percent or less alcohol by volume. (2) Is in an inner packaging of 5 L (1.3 gallons) or less. (3) Is a Packing Group III alcoholic beverage in a packaging of 250 L (66 gallons) or less.	N/A	No change. Restructure the paragraph.
Passenger Air	(1) Contains 24 percent or less alcohol by volume. (2) More than 24 percent and not more than 70 percent alcohol by volume when in unopened retail packagings not exceeding 5 liters (1.3 gallons) carried in carry-on or checked baggage, with a total net quantity per person of 5 liters (1.3) gallons for such beverages.	(1) Contains 24 percent or less alcohol by volume. (2) More than 24 percent and not more than 70 percent alcohol by volume when in unopened retail packagings not exceeding 5 liters (1.3 gallons) carried in carry-on or checked baggage, with a total net quantity per person of 5 liters (1.3) gallons for such beverages.	No change. Restructure the paragraph.
Cargo Air	(1) Contains 24 percent or less alcohol by volume. (2) Is in an inner packaging of 5 L (1.3 gallons) or less.	(1) Contains 24 percent or less alcohol by volume. (2) Alcoholic beverages not exceeding 70 percent alcohol content by volume when packaged in 5 liters or less.	An upper limit of 70 percent alcohol by volume is proposed to be added to alcoholic beverages shipped by cargo aircraft to harmonize with the ICAO requirements.

Section 173.159a

Section 173.159 specifies requirements for the transportation of wet batteries, including non-spillable batteries. Further exceptions for non-spillable batteries are specified in § 173.159a. If certain transport conditions specified in §§ 173.159 and 173.159a are met, such as specific packaging and securement requirements, non-spillable batteries are excepted from the HMR.

In a final rule published on January 14, 2009, under Docket Nos. PHMSA–2007–0065 (HM–224D) and PHMSA–2008–0005 (HM–215J) [74 FR 2200], entitled ''Hazardous Materials: Revision to Requirements for the Transportation of Batteries and Battery-Powered Devices; and Harmonization With the United Nations Recommendations, International Maritime Dangerous Goods Code, and International Civil Aviation Organization's Technical Instructions,'' PHMSA amended § 173.159(f) to describe the conditions under which a battery is considered ''non-spillable,'' and relocated the exceptions pertaining to non-spillable batteries from §§ 173.159(d) and 173.159(f), to a new § 173.159a.

However, when these exceptions were relocated, PHMSA inadvertently required that excepted non-spillable batteries must be securely packaged in strong outer packagings. This modification, in essence, prohibited excepted batteries from being palletized or placed on a skid. Therefore, in this NPRM, PHMSA is proposing to revise § 173.159a(c)(1) to except from the packaging requirements of § 173.159, non-spillable batteries that are secured to skids or pallets and capable of withstanding the shocks normally incident to transportation, provided the batteries meet the requirements of § 173.159(a) and are loaded or braced so as to prevent damage and short circuits in transit. Further, any other material loaded in the same vehicle must be blocked, braced, or otherwise secured to prevent contact with or damage to the batteries.

Part 177

Section 177.834

Section 177.834 provides the general requirements for the loading and unloading of vehicles intended to transport hazardous materials via ground transportation. Paragraph (j) of this section requires CTMVs to be transported with all valves and other closures in liquid discharge systems to be closed and free of leaks unless transported in accordance with the requirements for empty packages specified in § 173.29(b)(2).

The provision specified in § 177.834(j) was added on May 30, 1996, in a final rule published under Docket Number HM–222B [61 FR 27166] to consolidate the closure requirements for cargo tanks transporting Class 3 (flammable liquid) materials, Class 8 (corrosive) materials, and Division 6.1 (poisonous) materials. This rule inadvertently overlooked the impact the closure requirement would have on MC 338 cargo tanks that transport cryogenic liquids. These tanks have external self-closing valves that are normally transported in an open position and are designed to close with a tremendous amount of force to ensure proper closure. Subsequently, these valves require a large amount of force and effort to open. As a result, the potential for physical injury to employee personnel is increased and the ability of the valve system to operate is potentially compromised as a result of repeated cycling (opening, closing, and testing).

Therefore, in this NPRM, we propose to revise § 177.834(j) to permit external emergency self-closing valves on MC 338 cargo tanks containing residues of cryogenic liquids to remain either open or closed during transit.

Part 178

Section 178.2

Section 178.2 specifies the responsibilities of the manufacturer or other person certifying compliance with the specification packaging requirements of Part 178. As part of these requirements, the manufacturer or other person certifying compliance with the requirements of Part 178 must provide both notification to each person to whom a packaging is transferred of all requirements in Part 178 not met at the time of transfer, and closure requirements for the packaging. These closure requirements include information specifying the type(s) and dimensions of the closures, including gaskets and any other components needed to ensure that the packaging is capable of successfully passing the applicable performance tests. This information must include any procedures to be followed, including closure instructions for inner packagings and receptacles, to effectively assemble and close the packaging for the purpose of preventing leakage in transportation. Closure instructions must provide for a consistent and repeatable means of closure that is sufficient to ensure the packaging is closed in the same manner as it was tested.

A package, as defined in § 171.8, ''means a packaging plus its contents.'' Ensuring that a package is closed in a manner which precludes the release of a hazardous material is essential to safe transportation, regardless of whether the package is completely filled or contains only residue. In accordance with § 173.29, an empty packaging containing only the residue of a hazardous material must be offered for transportation and transported in the same manner as when it previously contained a greater quantity of that hazardous material. This includes properly closing the packaging for transportation and providing closure notification requirements to each person whom a packaging is transferred in accordance with § 178.2(c).

In April 2006, PHMSA received a request (Reference No.: 06–0123) seeking clarification of the closure notification requirements specified in § 178.2(c) for packages containing residues. In response, we indicated that packages containing residues must meet the notification requirements of § 178.2(c) and that we would clarify this issue in a future rulemaking.

In this rulemaking, PHMSA is addressing this issue by proposing to revise § 178.2(c) to clarify that the notification requirements apply to packagings containing a residue of a hazardous materials unless these packagings of hazardous materials meet the exceptions provided in § 173.29(b). This clarification will ensure packages containing residues are properly closed and increase compliance with the intent of this regulation. This increased compliance should also result in fewer packages being improperly closed, and thereby reduce the potential for leaks in transportation.

Certain CTMVs require as part of their specification both a CTMV manufacturer's data report and a certificate stating that the completed cargo tank motor vehicle conforms in all respects to the appropriate specification and the American Society of Mechanical Engineers (ASME) Code. Section 178.2(c) currently excepts CTMVs which require a manufacturer's data report and certificate from the notification requirements. Specifically, § 178.2(c) states that CTMV's in compliance with §§ 178.337–18 and 178.345–10 are excepted from the notification requirements specified in § 178.2(c). The current reference to § 178.345–10 in paragraph § 178.2 (c) refers to pressure relief, not the CTMV manufacturer's data report and certificates for DOT 406, 407 and 412 (CTMVs), and is in error. The correct citation should read § 178.345–15, which refers to the manufacturer's data report and certification of DOT 406, 407 and 412 CTMVs. In addition, it was brought to PHMSA's attention that a reference to a MC 338 cargo tank manufacturer's data report certificate in § 178.338–19 is missing in § 178.2(c).

We agree and believe that a reference to a MC 338 cargo tank manufacturer's data report certificate would be appropriate in § 178.2(c). Therefore, in this rulemaking, we propose to correct these errors and omissions by replacing the reference to § 178.345–10 with § 178.345–15 and adding a reference to § 178.338–19.

Appendix E to Part 178

Appendix E to Part 178 describes the Flame Penetration Resistance Test referenced throughout the HMR with regard to the outer packaging for chemical oxygen generators and cylinders containing compressed oxygen. This appendix specifies requirements for the Flame Penetration Resistance Test and includes criteria for acceptance of a passing test result, a summary of the test method and procedure, details on the preparation of test specimens, and construction and calibration specifications for the test equipment.

On January 31, 2007, PHMSA published a final rule under docket number RSPA–04–17664 (HM–224B) [72 FR 4442] entitled ''Transportation of Compressed Oxygen, Other Oxidizing Gases and Chemical Oxygen Generators on Aircraft,'' which included amendments that changed packaging and marking requirements for air shipments of compressed oxygen cylinders and chemical oxygen generators. As of October 1, 2009, certain compressed gases shipped by air, and chemical oxygen generators must be placed in a rigid outer packaging demonstrated to withstand both flame penetration and thermal resistance testing requirements.

Appendix E specifies the procedures to follow to conduct the Flame Penetration Resistance Test. The test procedure is described in sections (g)(2) of this Appendix and references a ''Figure 1,'' but HMR, Figure 1 is omitted. In sections (d)(3) and (f)(2) of this Appendix, the design and calibration of the calorimeter is described and refers to a ''Figure 2,'' but Figure 2 is also omitted. Therefore, in this NPRM, PHMSA is proposing to add Figures 1 and 2 that were referenced but inadvertently omitted from Appendix E.

Part 180

Section 180.416

Section 180.416 details the requirements for a discharge system inspection and maintenance program for cargo tanks transporting liquefied compressed gases. Specifically, § 180.416 applies to operators using specification MC 330, MC 331, and non-specification cargo tanks authorized under § 173.315(k) for transportation of liquefied compressed gases other than carbon dioxide. As part of the discharge system inspection specified in this section, the operator must visually inspect each delivery hose assembly at least once each calendar month in which the delivery hose assembly is in service and keep a record of each inspection. In accordance with § 180.416(d), that record must include the inspection date, the name of the person performing the inspection, the hose assembly identification number, the company name, the date the hose was assembled and tested, and an indication that the delivery hose assembly and piping system passed or failed the tests and inspections.

There has been some confusion among the regulated community pertaining to the requirement to include ''the company name'' in the record as specified in § 180.416(d). Specifically, there was concern over whether ''the

company name'' refers to the name of the operator or the name of the manufacturer of the hose.

In this NPRM, PHMSA proposes to revise § 180.416(d) to clarify that the reference to the ''company name'' on the inspection record is the name of the hose manufacturer. We believe this proposed revision will clarify the requirement for discharge system inspection records, resulting in more accurate records for specification MC 330, MC 331, and non-specification cargo tanks authorized under § 173.315(k) transporting of liquefied compressed gases other than carbon dioxide.

III. Regulatory Analyses and Notices

A. Statutory/Legal Authority for This Rulemaking

This NPRM is published under authority of Federal hazardous materials transportation law (Federal hazmat law; 49 U.S.C. 5101 et seq.). Section 5103(b) of Federal hazmat law authorizes the Secretary of Transportation to prescribe regulations for the safe transportation, including security, of hazardous materials in intrastate, interstate, and foreign commerce. If adopted as proposed, this NPRM would make miscellaneous amendments to the HMR. In addition, if adopted as proposed, this NPRM would correct errors in the hazardous materials table and corresponding special provisions, clarify the requirements for lab packing temperature controlled materials and clarify various cargo tank provisions and revise the training requirements to require that a hazmat employer must make hazmat employee training records available upon request to an authorized officials. These amendments clarify regulatory requirements and, where appropriate, decrease the regulatory burden without compromising the safe transportation of hazardous materials in commerce.

B. Executive Order 12866, Executive Order 13563 and DOT Regulatory Policies and Procedures

This proposed rule is not considered a significant regulatory action under section 3(f) and was not reviewed by the Office of Management and Budget (OMB). The proposed rule is not considered a significant rule under the Regulatory Policies and Procedures order issued by the Department of Transportation [44 FR 11034].

In this notice of proposed rulemaking, we propose to amend miscellaneous provisions in the HMR to clarify the provisions and to relax overly burdensome requirements. PHMSA anticipates the proposals contained in this rule will have economic benefits to the regulated community. This NPRM is designed to increase the clarity of the HMR, thereby increasing voluntary compliance while reducing compliance costs.

Executive Order 13563 is supplemental to and reaffirms the principles, structures, and definitions governing regulatory review that were established in Executive Order 12866 Regulatory Planning and Review of September 30, 1993. In addition, Executive Order 13563 specifically requires agencies to: (1) Involve the public in the regulatory process; (2) promote simplification and harmonization through interagency coordination; (3) identify and consider regulatory approaches that reduce burden and maintain flexibility; (4) ensure the objectivity of any scientific or technological information used to support regulatory action; and (5) consider how to best promote retrospective analysis to modify, streamline, expand, or repeal existing rules that are outmoded, ineffective, insufficient, or excessively burdensome.

In this NPRM, PHMSA has involved the public in the regulatory process in a variety of ways. Specifically, in this rulemaking PHMSA is addressing issues and errors that were identified and tagged for future rulemaking consideration in letters of interpretation issued to the regulated community and through other correspondence with PHMSA stakeholders. In addition, PHMSA has responded to the TSI's request to incorporate a guidance document designed to assist the sulphur industry in ensuring the safe transport of molten sulphur (P–1581). PHMSA is asking for public comments based on the proposals in this NPRM. Upon receipt of public comment, PHMSA will address all substantive comments in the next rulemaking action under this docket number.

The amendments in the NPRM promote simplification and harmonization through interagency coordination. Specifically, in this NPRM, PHMSA is simplifying the lab packing requirements, the hazardous materials table and special provisions and the requirements for cargo tank transportation. These revisions are expected to produce a safety benefit derived from the increased clarity and reduced ambiguity in the special provisions to the § 172.101 HMT, and the lab packaging and cargo tank requirements of the HMR. There are minimal additional costs. The clarity will result in net benefits.

This NPRM also promotes harmonization with international standards, such as the IMDG Code, Canada's TDG requirements and the ICAO TI with regard to the handling of ''Lead compounds, soluble n.o.s.'' via vessel, rail shipments of residue between the United States and Canada and alcoholic beverages via aircraft.

These revisions to the § 172.101 HMT will eliminate errors in the § 172.101 HMT, reduce ambiguity, harmonize the HMR with international regulations, and improve clarity. Many of these revisions were brought to PHMSA's attention through letters of interpretation requested from the regulated community. Although these revisions are minor, they are expected to produce a safety benefit derived from the increased clarity and accuracy of the text in the § 172.101 HMT.

This NPRM proposes approaches that reduce the regulatory burden on the regulated community, allows for flexibility in achieving compliance and maintains an appropriate level of safety. This NPRM permits flexibility in achieving compliance when transporting cargo tanks while maintaining an appropriate level of safety. This NPRM also incorporates a special permit DOT SP–13556 that has a strong record of safety. Incorporating this permit into the HMR will provide wider access to the benefits of the provisions granted in this special permit, therefore, fostering greater regulatory flexibility without compromising transportation safety.

A majority of the amendments in this rulemaking are simple clarifications and do not require significant scientific or technological information. However, when necessary in this NPRM, PHMSA used scientific or technological information to support its regulatory action. Specifically, such data was considered when structuring alternatives on how to best deal with issues regarding the safe transport of cargo tanks and the transport of alcoholic beverages with greater than 70 percent alcohol by volume via cargo aircraft. This information was used in the evaluation of alternative proposals and ultimately this information determined how best to promote retrospective analysis to modify and streamline existing requirements that are outmoded, ineffective, insufficient, or excessively burdensome.

C. Executive Order 13132

This proposed rule was analyzed in accordance with the principles and criteria contained in Executive Order 13132 (''Federalism''). This proposed rule would preempt state, local and

Indian tribe requirements but does not propose any regulation that has substantial direct effects on the states, the relationship between the national government and the states, or the distribution of power and responsibilities among the various levels of government. Therefore, the consultation and funding requirements of Executive Order 13132 do not apply.

The Federal hazardous material transportation law, 49 U.S.C. 5125(b)(1), contains an express preemption provision (49 U.S.C. 5125(b)) preempting state, local, and Indian tribe requirements on certain covered subjects. Covered subjects are:

(i) The designation, description, and classification of hazardous materials;

(ii) The packing, repacking, handling, labeling, marking, and placarding of hazardous materials;

(iii) The preparation, execution, and use of shipping documents related to hazardous materials and requirements related to the number, content, and placement of those documents;

(iv) The written notification, recording, and reporting of the unintentional release in transportation of hazardous materials; or

(v) The design, manufacture, fabrication, marking, maintenance, reconditioning, repair, or testing of a packaging or container which is represented, marked, certified, or sold as qualified for use in the transport of hazardous materials.

This proposed rule concerns the classification, packaging, and handling of hazardous materials, among other covered subjects. If adopted, this rule would preempt any state, local, or Indian tribe requirements concerning these subjects unless the non-Federal requirements are ''substantively the same''(see 49 CFR 107.202(d) as the Federal requirements.)

Federal hazardous materials transportation law provides at 49 U.S.C. 5125(b)(2) that if PHMSA issues a regulation concerning any of the covered subjects, PHMSA must determine and publish in the **Federal Register** the effective date of Federal preemption. That effective date may not be earlier than the 90th day following the date of issuance of the final rule and not later than two years after the date of issuance. PHMSA proposes the effective date of federal preemption be 90 days from publication of a final rule in this matter in the **Federal Register**.

D. Executive Order 13175

This proposed rule has been analyzed in accordance with the principles and criteria contained in Executive Order 13175 (''Consultation and Coordination with Indian Tribal Governments''). Because this proposed rule does not have tribal implications and does not impose substantial direct compliance costs on Indian tribal governments, the funding and consultation requirements of Executive Order 13175 do not apply, and a tribal summary impact statement is not required.

E. Regulatory Flexibility Act, Executive Order 13272, and DOT Procedures and Policies

The Regulatory Flexibility Act (5 U.S.C. 601 *et seq.*) requires an agency to review regulations to assess their impact on small entities unless the agency determines the rule is not expected to have a significant impact on a substantial number of small entities. This proposed rule would amend miscellaneous provisions in the HMR to clarify provisions based on our PHMSA's initiatives and correspondence with the regulated community. While maintaining safety, it would relax certain requirements that are overly burdensome. The proposed changes are generally intended to provide relief to shippers, carriers, and packaging manufacturers, including small entities.

Consideration of alternative proposals for small businesses. The Regulatory Flexibility Act directs agencies to establish exceptions and differing compliance standards for small businesses, where it is possible to do so and still meet the objectives of applicable regulatory statutes. In the case of hazardous materials transportation, it is not possible to establish exceptions or differing standards and still accomplish our safety objectives.

The impact of this proposed rule is not expected to be significant. The proposed changes are generally intended to provide relief to shippers, carriers, and packaging manufactures and testers, including small entities. This relief will provide marginal positive economic benefits to shippers, carriers, and packaging manufactures and testers, including small entities however; these benefits are not at a level that can be considered economically significant. Therefore, this proposed rule will not have a significant economic impact on a substantial number of small entities.

This proposed rule has been developed in accordance with Executive Order 13272 (''Proper Consideration of Small Entities in Agency Rulemaking'') and DOT's procedures and policies to promote compliance with the Regulatory Flexibility Act to ensure that potential impacts of draft rules on small entities are properly considered.

F. Paperwork Reduction Act

This proposed rule does not impose any new information collection requirements and in three instances marginally decreases the information collection burden on the reregulated community. Specifically the following information collections affected by this rulemaking are:

- Office of Management and Budget (OMB) Control Number 2137–0051; Rulemaking and Special Permit Petitions: A slight reduction in information collection burden is anticipated due to the incorporation of a DOT SP–13556 into § 173.134. This permit will allow individuals more flexibility when transporting sharps and decrease the need for special permits applications when transporting sharps as regulated medical wastes.
- OMB Control Number 2137–0034; Hazardous Materials Shipping Papers and Emergency Response Information: A negligible reduction in information collection burden due to relaxation of the shipping paper description requirements for residues specified in § 172.203. Specifically, this will allow individuals more flexibility on the shipping paper descriptions when shipping waste internationally, and will correct a regulatory inconsistency between the HMR and Canadian Hazardous materials regulations, fostering international transport of residues.
- OMB Control Number 2137–0557; Approvals for Hazardous Materials: A slight reduction in information collection burden is anticipated due to relaxation of approval submittal requirements specified in § 105.40. Specifically, this relaxation will permit individuals wishing to apply with PHMSA to be an approved designated agent to submit their applications either by standard mail or electronic mail. Currently, the HMR only permits submission through standard mail. This change will result in a decrease in duplicate hard copies submitted to PHMSA as well as a decrease in the processing time for such applications.

G. Regulation Identifier Number (RIN)

A regulation identifier number (RIN) is assigned to each regulatory action listed in the Unified Agenda of Federal Regulations. The Regulatory Information Service Center publishes the Unified Agenda in April and October of each year. The RIN number contained in the heading of this document can be used to cross-reference this action with the Unified Agenda.

H. Unfunded Mandates Reform Act

This proposed rule does not impose unfunded mandates under the Unfunded Mandates Reform Act of 1995. It does not result in costs of $141,300,000 or more to either state, local, or tribal governments, in the aggregate, or to the private sector, and is the least burdensome alternative that achieves the objective of the rule.

I. Environmental Assessment

The National Environmental Policy Act, 42 U.S.C. 4321–4375, requires federal agencies to analyze proposed actions to determine whether the action will have a significant impact on the human environment. The Council on Environmental Quality (CEQ) regulations require federal agencies to conduct an environmental review considering: (1) The need for the proposed action; (2) alternatives to the proposed action; (3) probable environmental impacts of the proposed action and alternatives; and (4) the agencies and persons consulted during the consideration process. PHMSA proposes to make miscellaneous amendments to the HMR based on PHMSA's own initiatives including a review of the HMR, previous letters of interpretation and special permits we issued. The proposed amendments are intended to update, clarify, or provide relief from certain existing regulatory requirements to promote safer transportation practices; eliminate unnecessary regulatory requirements; facilitate international commerce; and make these requirements easier to understand.

Description of Action:

Docket No. PHMSA–2011–0138 (HM–218G), NPRM

Transportation of hazardous materials in commerce is subject to requirements in the HMR, issued under authority of Federal hazardous materials transportation law, codified at 49 U.S.C. 5001 et seq. To facilitate the safe and efficient transportation of hazardous materials in international commerce, the HMR provide that both domestic and international shipments of hazardous materials may be offered for transportation and transported under provisions of the international regulations.

Proposed Amendments to the HMR:

In this NPRM, PHMSA is proposing to:

- Permit designated agents for non-residents to submit designation requests by electronic mail in addition to traditional mail.
- Add the TSI ''Molten Sulphur Rail Tank Car Guidance'' document to the list of informational materials not requiring incorporation by reference in § 171.7.
- Revise the § 172.101 HMT to correct an error in the transportation requirements for entries listed under the proper shipping name, ''Hydrazine Dicarbonic Acid Diazide.''
- Revise the § 172.101 HMT to remove the entry for ''Zinc ethyl, see Diethylzinc'' which was superseded by proper shipping names adopted in a previous rulemaking.
- Revise special provision 138 in § 172.102 to clarify the lead solubility calculation utilized for classification of material as a Marine Pollutant.
- Remove references to special provisions B72 and B74 in § 172.102. These special provisions were removed in a previous rulemaking, however, twelve entries in the § 172.101 HMT still contain references to these special provisions.
- Revise the shipping paper requirements in § 172.203(e) to permit the phrase ''Residue last contained'' to be placed before or after the basic shipping description sequence, or for rail shipment, directly preceding the proper shipping name in the basic shipping description sequence.
- Update the training recordkeeping requirements in § 172.704 to specify that a hazardous materials (hazmat) employer must make hazmat employee training records available upon request, at a reasonable time and location, to an authorized official of the Department of Transportation or the Department of Homeland Security.
- Clarify that the material of trade exception in § 173.6 may be used when transporting Division 2.1 and 2.2 gases in Dewar flasks.
- Clarify the lab pack provisions in § 173.12 pertaining to temperature-controlled materials contained in a lab pack.
- Clarify the exceptions for external emergency self-closing valves on CTMVs in § 173.33(g) to specify that external emergency self-closing valves on MC 338 cargo tanks containing cryogenic liquids may remain open during transportation.
- Correct an inadvertent deletion of the § 173.62 packaging requirements for explosives.
- Incorporate DOT SP–13556 into § 173.134, to authorize the transportation by motor vehicle of certain regulated medical wastes, designated as sharps, in non-DOT specification containers fitted into wheeled racks.
- Revise the requirements for cargo air transport of alcoholic beverages § 173.150 to harmonize with the ICAO TI.
- Clarify the exceptions in § 173.159a for non-spillable batteries secured to skids or pallets.
- Revise § 178.2(c) to clarify the applicability of the notification requirements for packages containing residues.
- Clarify the inspection record requirements in § 180.416 for discharge systems of cargo tanks transporting liquefied compressed gases.
- Clarify the requirements for the Flame Penetration Resistance test required for chemical oxygen generators and certain compressed gases in Appendix E to Part 178.

Alternatives Considered:

Alternative (1): Do nothing.

Our goal is to update, clarify and provide relief from certain existing regulatory requirements to promote safer transportation practices, eliminate unnecessary regulatory requirements, and facilitate international commerce. We rejected the do-nothing alternative.

Alternative (2): Go forward with the proposed amendments to the HMR in this NPRM.

This is the selected alternative.

Environmental Consequences

Hazardous materials are substances that may pose a threat to public safety or the environment during transportation because of their physical, chemical, or nuclear properties. The hazardous materials regulatory system is a risk management system that is prevention oriented and focused on identifying a safety hazard and reducing the probability and quantity of a hazardous material release. Hazardous materials are categorized by hazard analysis and experience into hazard classes and packing groups. The regulations require each shipper to classify a material in accordance with these hazard classes and packing groups. The process of classifying a hazardous material is itself a form of hazard analysis. Further, the regulations require the shipper to communicate a material's hazards through use of the hazard class, packing group, and proper shipping name on the shipping paper and the use of labels on packages and placards on transport vehicles. Thus, the shipping paper, labels, and placards communicate the most significant findings of the shipper's hazard analysis. A hazardous material is assigned to one of three packing groups based upon its degree of hazard, from a high hazard, Packing Group I to a low

hazard, Packing Group III material. The quality, damage resistance, and performance standards of the packaging in each packing group are appropriate for the hazards of the material transported.

Under the HMR, hazardous materials are transported by aircraft, vessel, rail, and highway. The potential for environmental damage or contamination exists when packages of hazardous materials are involved in accidents or en route incidents resulting from cargo shifts, valve failures, package failures, loading, unloading, collisions, handling problems, or deliberate sabotage. The release of hazardous materials can cause the loss of ecological resources (e.g. wildlife habitats) and the contamination of air, aquatic environments, and soil. Contamination of soil can lead to the contamination of ground water. Compliance with the HMR substantially reduces the possibility of accidental release of hazardous materials.

Conclusion

PHMSA proposes to make miscellaneous amendments to the HMR based on comments from the regulated community and PHMSA's own rulemaking initiatives. The proposed amendments are intended to update, clarify, or provide relief from certain existing regulatory requirements to promote safer transportation practices; eliminate unnecessary regulatory requirements; facilitate international commerce; and make these requirements easier to understand. These proposed clarifications of regulatory requirements, if adopted, will foster a greater level of compliance with the HMR and thus, diminished levels of hazardous materials transportation incidents affecting the health and safety of the environment. Therefore, the net environmental impact of this proposal will be positive.

J. Privacy Act

Anyone is able to search the electronic form of any written communications and comments received into any of our dockets by the name of the individual submitting the document (or signing the document, if submitted on behalf of an association, business, labor union, etc.). You may review DOT's complete Privacy Act Statement in the **Federal Register** published on April 11, 2000 (65 FR 19477), or you may visit *http://www.regulations.gov/search/footer/privacyanduse.jsp.*

K. International Trade Analysis

The Trade Agreements Act of 1979 (Pub. L. 96–39), as amended by the Uruguay Round Agreements Act (Pub. L. 103–465), prohibits Federal agencies from establishing any standards or engaging in related activities that create unnecessary obstacles to the foreign commerce of the United States. Pursuant to these Acts, the establishment of standards are not considered unnecessary obstacles to the foreign commerce of the United States, so long as the standards have a legitimate domestic objective, such as the protection of safety, and do not operate in a manner that excludes imports that meet this objective. The statute also requires consideration of international standards and, where appropriate, that they be the basis for U.S. standards. PHMSA notes the purpose is to ensure the safety of the American public, and has assessed the effects of this rule to ensure that it does not exclude imports that meet this objective. As a result, this proposed rule is not considered as creating an unnecessary obstacle to foreign commerce.

List of Subjects

49 CFR Part 105

Administrative practice and procedure, Hazardous materials transportation, Penalties, Reporting and recordkeeping requirements.

49 CFR Part 171

Exports, Hazardous materials transportation, Hazardous waste, Imports, Incorporation by reference, Reporting and recordkeeping requirements.

49 CFR Part 172

Education, Hazardous materials transportation, Hazardous waste, Incorporation by reference, Labeling, Markings, Packaging and containers, Reporting and recordkeeping requirements.

49 CFR Part 173

Hazardous materials transportation, Incorporation by reference, Packaging and containers, Radioactive materials, Reporting and recordkeeping requirements, Uranium.

49 CFR Part 177

Hazardous materials transportation, Loading and unloading, Segregation and separation.

49 CFR Part 178

Hazardous materials transportation, Incorporation by reference, Motor vehicle safety, Packaging and containers, Reporting and recordkeeping requirements.

49 CFR Part 180

Hazardous materials transportation, Motor carriers, Motor vehicle safety, Packaging and containers, Railroad safety, Reporting and recordkeeping requirements.

In consideration of the foregoing, we propose to amend 49 CFR chapter I as follows:

PART 105—HAZARDOUS MATERIALS PROGRAM PROCEDURES

1. The authority citation for part 105 continues to read as follows:

Authority: 49 U.S.C. 5101–5127; 49 CFR 1.53.

2. In § 105.40, paragraph (d) is revised to read as follows:

§ 105.40 Designated agents for non-residents.

* * * * *

(d) Each designation must be submitted to: Approvals and Permits Division, Pipeline and Hazardous Materials Safety Administration, Attn: PHH–30, U.S. Department of Transportation, East Building, 1200 New Jersey Avenue SE., Washington, DC 20590–0001 or by electronic mail to: *specialpermits@dot.gov* or *approvals@dot.gov* as appropriate.

* * * * *

PART 171—GENERAL INFORMATION, REGULATIONS, AND DEFINITIONS

3. The authority citation for part 171 continues to read as follows:

Authority: 49 U.S.C. 5101–5128, 44701; 49 CFR 1.45 and 1.53; Pub. L. 101–410 section 4 (28 U.S.C. 2461 note); Pub. L. 104–134, section 31001.

4. In § 171.7, in the paragraph (b) table, the following entry is added:

§ 171.7 Reference material.

(b) * * *

Source and name of material	49 CFR reference
* * * * * * *	
The Sulphur Institute, 1140 Connecticut Avenue NW., Washington, DC 20036	
Molten Sulphur Rail Tank Car Guidance document, November 2011 final edition	172.102
* * * * * * *	

* * * * *

PART 172—HAZARDOUS MATERIALS TABLE, SPECIAL PROVISIONS, HAZARDOUS MATERIALS COMMUNICATIONS, EMERGENCY RESPONSE INFORMATION, AND TRAINING REQUIREMENTS

5. The authority citation for part 172 continues to read as follows:

Authority: 49 U.S.C. 5101–5128, 44701; 49 CFR 1.53.

6. In § 172.101, the Hazardous Materials Table is amended by removing the entries under ''[REMOVE]'', by adding the entries under ''[ADD]'' and revising entries under ''[REVISE]'' in the appropriate alphabetical sequence to read as follows:

§ 172.101 Purpose and use of hazardous materials table.

* * * * *

§ 172.101—HAZARDOUS MATERIALS TABLE

Symbols	Hazardous materials descriptions and proper shipping names	Hazard class or division	Identification numbers	PG	Label codes	Special provisions (§ 172.102)	(8) Packaging (§ 173.***) Exceptions	Non-bulk	Bulk	(9) Quantity limitations Passenger aircraft/rail	Cargo aircraft only	(10) Vessel stowage Location	Other
(1)	(2)	(3)	(4)	(5)	(6)	(7)	(8A)	(8B)	(8C)	(9A)	(9B)	(10A)	(10B)
	[REMOVE]												
	*		*		*	*	*		*	*			
	Hydrazine dicarbonic acid diazide.	Forbidden											
			II	8, 6.1	B16, B53, IB2, T7, TP2, TP13.	None	202	243	Forbidden	30 L	D	40	II
			III	8, 6.1	B16, B53, IB3, T4, TP1.	154	203	241	5 L	60 L	D	40	III
	*		*		*	*	*		*	*			
	Zinc ethyl, see Diethylzinc.												
	*		*		*	*	*		*	*			
	[ADD]												
	*		*		*	*	*		*	*			
	Hydrazine dicarbonic acid diazide.	Forbidden											
	*		*		*	*	*		*	*			
	Paint related material, flammable, corrosive *(including paint thinning or reducing compound).*	3	UN3469	II	3, 8	IB2, T7, TP2, TP8, TP28.	150	202	243	1 L	5 L	B	40
				III	3, 8	IB3, T4, TP1, TP29.	150	203	242	5 L	60 L	A	40
	*		*		*	*	*		*	*			
	[REVISE]												
	*		*		*	*	*		*	*			
	tert-Butyl isocyanate	6.1	UN2484	I	6.1, 3	1, B9, B14, B30, T20, TP2, TP13, TP38, TP44.	None	226	244	Forbidden	Forbidden	D	40
	*		*		*	*	*		*	*			
D	Ethyl phosphonothioic dichloride, anhydrous.	6.1	NA2927	I	6.1, 8	2, B9, B14, B32, T20, TP4, TP12, TP13, TP38, TP45.	None	227	244	Forbidden	Forbidden	D	40
D	Ethyl phosphonous dichloride, anhydrous *pyrophoric liquid.*	6.1	NA2845	I	6.1, 4.2	2, B9, B14, B32, T20, TP4, TP12, TP13, TP38, TP45.	None	227	244	Forbidden	Forbidden	D	18
D	Ethyl phosphorodichloridate.	6.1	NA2927	I	6.1, 8	2, B9, B14, B32, T20, TP4, TP12, TP13, TP38, TP45.	None	227	244	Forbidden	Forbidden	D	40

		*	*		*	*	*		*		*			
D	Methyl phosphonous dichloride, *pyrophoric liquid*.	6.1	NA2845	I	6.1, 4.2	2, B9, B14, B16, B32, T20, TP4, TP12, TP13, TP38, TP45.	None	227	244	Forbidden	Forbidden	D	18
		*	*		*	*	*		*		*			
+	Sulfuric acid, fuming *with 30 percent or more free sulfur trioxide*.	8	UN1831	I	8, 6.1	2, B9, B14, B32, B77, B84, N34, T20, TP2, TP12, TP13.	None	227	244	Forbidden	Forbidden	C	14, 40
		*	*		*	*	*		*		*			
D	Sulfur, molten	9	NA2448	III	9	30, B13, IB3, R1, T1, TP3.	None	213	247	Forbidden	Forbidden	C	61
I	Sulfur, molten	4.1	UN2448	III	4.1	30, B13, IB1, R1 T1, TP3.	None	213	247	Forbidden	Forbidden	C	74
		*	*		*	*	*		*		*			
G	Toxic by inhalation liquid, corrosive, flammable, n.o.s. *with an inhalation toxicity lower than or equal to 200 ml/m3 and saturated vapor concentration greater than or equal to 500 LC50*.	6.1	UN3492	I	6.1, 8, 3	1, B9, B14, B30, T22, TP2, TP13, TP27, TP38, TP44.	None	226	244	Forbidden	Forbidden	D	40, 125
G	Toxic by inhalation liquid, corrosive, flammable, n.o.s. *with an inhalation toxicity lower than or equal to 1000 ml/m3 and saturated vapor concentration greater than or equal to 10 LC50*.	6.1	UN3493	I	6.1, 8, 3	2, B9, B14, B32, T20, TP2, TP13, TP27, TP38, TP45.	None	227	244	Forbidden	Forbidden	D	40, 125
G	Toxic by inhalation liquid, flammable, corrosive, n.o.s. *with an inhalation toxicity lower than or equal to 200 ml/m3 and saturated vapor concentration greater than or equal to 500 LC50*.	6.1	UN3488	I	6.1, 3, 8	1, B9, B14, B30, T22, TP2, TP13, TP27, TP38, TP44.	None	226	244	Forbidden	Forbidden	D	40, 125
G	Toxic by inhalation liquid, flammable, corrosive, n.o.s. *with an inhalation toxicity lower than or equal to 1000 ml/m3 and saturated vapor concentration greater than or equal to 10 LC50*.	6.1	UN3489	I	6.1, 3, 8	2, B9, B14, B32, T20, TP2, TP13, TP27, TP38, TP45.	None	227	244	Forbidden	Forbidden	D	40, 125

§ 172.101—HAZARDOUS MATERIALS TABLE—Continued

Symbols	Hazardous materials descriptions and proper shipping names	Hazard class or division	Identification numbers	PG	Label codes	Special provisions (§ 172.102)	(8) Packaging (§ 173.***)			(9) Quantity limitations		(10) Vessel stowage	
							Exceptions	Non-bulk	Bulk	Passenger aircraft/rail	Cargo aircraft only	Location	Other
(1)	(2)	(3)	(4)	(5)	(6)	(7)	(8A)	(8B)	(8C)	(9A)	(9B)	(10A)	(10B)
*		*		*		*	*		*	*			
G	Toxic by inhalation liquid, water-reactive, flammable, n.o.s. *with an inhalation toxicity lower than or equal to 200 ml/m3 and saturated vapor concentration greater than or equal to 500 LC50.*	6.1	UN3490	I	6.1, 4.3, 3	1, B9, B14, B30, T22, TP2, TP13, TP27, TP38, TP44.	None	226	244	Forbidden	Forbidden	D	21, 28, 40, 49
G	Toxic by inhalation liquid, water-reactive, flammable, n.o.s. *with an inhalation toxicity lower than or equal to 1000 ml/m3 and saturated vapor concentration greater than or equal to 10 LC50.*	6.1	UN3491	I	6.1, 4.3, 3	2, B9, B14, B32, T20, TP2, TP13, TP27, TP38, TP45.	None	227	244	Forbidden	Forbidden	D	21, 28, 40, 49
*		*		*		*	*		*	*			

* * * * *

7. In § 172.102, special provision 138 is added in paragraph (c)(1) and special provision R1 in paragraph (c)(6) is revised to read as follows:

§ 172.102 Special Provisions.

* * * * *

(c) * * *

(1) * * *

138 This entry applies to lead compounds which, when mixed in a ratio of 1:1,000 with 0.07 M (Molar concentration) hydrochloric acid and stirred for one hour at a temperature of 23 °C ± 2 °C, exhibit a solubility of more than 5 percent. Lead compounds which, when mixed in a ratio of 1:1,000 with 0.07 M (Molar concentration) hydrochloric acid and stirred for one hour at a temperature of 23 °C ± 2 °C, exhibit a solubility of 5 percent or less are not subject to the requirements of this subchapter unless they meet criteria as another hazard class or division. Lead compounds that have a solubility of 5 percent or less in accordance with this special provision are not subject to the requirements of this subchapter that pertain to Marine Pollutants.

* * * * *

(6) * * *

R1 A person who offers for transportation tank cars containing sulfur, molten or residue of sulfur, molten may reference the Sulphur Institute's, ''Molten Sulphur Rail Tank Car Guidance document'' (see § 171.7 of this subchapter) to indentify tank cars that may pose a risk in transportation due to the accumulation of molten sulfur on the outside of the tank.

* * * * *

8. In § 172.203 paragraph (e) is revised to read as follows:

§ 172.203 Additional description requirements.

* * * * *

(e) * * * (1) The description on the shipping paper for a packaging containing the residue of a hazardous material may include the words ''RESIDUE: Last Contained * * *'' immediately before or after the basic shipping description on the shipping paper.

(2) The description on the shipping paper for a tank car containing the residue of a hazardous material must include the phrase, ''RESIDUE: LAST CONTAINED * * *'' immediately before or after the basic shipping description or immediately preceding the proper shipping name of the material on the shipping paper.

9. In § 172.704, paragraph (d) is revised to read as follows:

§ 172.704 Training requirements.

* * * * *

(d) Recordkeeping. Each hazmat employer must create and retain a record of current training of each hazmat employee, inclusive of the preceding three years, in accordance with this section for as long as that employee is employed by that employer as a hazmat employee and for 90 days thereafter. A hazmat employer must make a hazmat employee's record of current training available upon request, at a reasonable time and location, to an authorized official of the Department of Transportation or the Department of Homeland Security. The record must include:

* * * * *

PART 173—SHIPPERS—GENERAL REQUIREMENTS FOR SHIPMENTS AND PACKAGINGS

10. The authority citation for part 173 continues to read as follows:

Authority: 49 U.S.C. 5101–5128, 44701; 49 CFR 1.45 and 1.53.

11. In § 173.6, paragraph (a)(2) is revised to read as follows:

§ 173.6 Materials of trade exceptions.

* * * * *

(a) * * *

(2) A Division 2.1 or 2.2 material in a cylinder with a gross weight not over 100 kg (220 pounds), in a Dewar flask meeting the requirements of § 173.320, or a permanently mounted tank manufactured to the ASME Code of not more than 70 gallon water capacity for a non-liquefied Division 2.2 material with no subsidiary hazard.

* * * * *

12. In § 173.12, paragraph (b)(3) is revised to read as follows:

§ 173.12 Exceptions for shipment of waste materials.

* * * * *

(b) * * *

(3) *Prohibited materials.* The following waste materials may not be packaged or described under the provisions of this paragraph (b): a material poisonous-by-inhalation, a temperature controlled material unless it complies with § 173.21(f)(1), a Division 6.1, Packing Group I material, chloric acid, and oleum (fuming sulfuric acid).

* * * * *

13. In § 173.33, paragraph (g) is revised to read as follows:

§ 173.33 Hazardous materials in cargo tank motor vehicles.

* * * * *

(g) *Remote control of self-closing stop valves—MC 330, MC 331 and MC 338 cargo tanks.* Each liquid or vapor discharge opening in an MC 330 or MC 331 cargo tank and each liquid filling and liquid discharge line in an MC 338 cargo tank must be provided with a remotely controlled internal self-closing stop valve, except when an MC 330 or MC 331 cargo tank is marked and used exclusively to transport carbon dioxide, or except when an MC 338 is used to transport argon, carbon dioxide, helium, krypton, neon, nitrogen, and xenon, or except when an MC 338 utilizes an external self-closing stop valve to comply with the requirements in § 178.338–11(b). However, if the cargo tank motor vehicle was certified before January 1, 1995, this requirement is applicable only when an MC 330 or MC 331 cargo tank is used to transport a flammable liquid, flammable gas, hydrogen chloride (refrigerated liquid), or anhydrous ammonia; or when an MC 338 cargo tank is used to transport flammable ladings.

* * * * *

14. In § 173.62, in paragraph (c)(5), in the Table of Packing Methods, Packing Instructions 130 is revised to read as follows:

§ 173.62 Specific packaging requirements for explosives.

* * * * *

(c) * * *

(5) * * *

TABLE OF PACKING METHODS

Packaging instruction	Inner packagings	Intermediate packagings	Outer packaging
* *	* *	*	* *
130 ..... Particular Packaging Requirements: 1. The following applies to UN 0006, 0009, 0010, 0015, 0016, 0018, 0019, 0034, 0035, 0038, 0039, 0048, 0056, 0137, 0138, 0168, 0169, 0171, 0181, 0182, 0183, 0186, 0221, 0238, 0243, 0244, 0245, 0246, 0254, 0280, 0281, 0286, 0287, 0297, 0299, 0300, 0301, 0303, 0321, 0328, 0329, 0344, 0345, 0346, 0347, 0362, 0363, 0370, 0412, 0424, 0425, 0434, 0435, 0436, 0437, 0438, 0451, 0459 and 0488. Large and robust explosives articles, normally intended for military use, without their means of initiation or with their means of initiation containing at least two effective protective features, may be carried unpackaged. When such articles have propelling charges or are self-propelled, their ignition systems must be protected against stimuli encountered during normal conditions of transport. A negative result in Test Series 4 on an unpackaged article indicates that the article can be considered for transport unpackaged. Such unpackaged articles may be fixed to cradles or contained in crates or other suitable handling devices.. 2. Subject to approval by the Associate Administrator, large explosive articles, as part of their operational safety and suitability tests, subjected to testing that meets the intentions of Test Series 4 of the UN Manual of Tests and Criteria with successful test results, may be offered for transportation in accordance with the requirements of this subchapter.	Not necessary	Not necessary	Boxes. Steel (4A). Aluminum (4B) Wood natural, ordinary (4C1). Wood natural, sift-proof walls (4C2) Plywood (4D). Reconstituted wood (4F). Fiberboard (4G). Plastics, expanded (4H1). Plastics, solid (4H2). Drums. Steel, removable head (1A2). Aluminum, removable head (1B2). Plywood (1D). Fiber (1G). Plastics, removable head (1H2). Large Packagings. Steel (50A) Aluminum (50B) Metal other than steel or aluminum (50N) Rigid plastics (50H) Natural wood (50C) Plywood (50D) Reconstituted wood (50F) Rigid fiberboard (50G).
* *	* *	*	* *

15. In § 173.134, paragraph (c)(2) is revised to read as follows:

§ 173.134 Class 6, Division 6.2—Definitions and exceptions.

* * * * *

(c) * * *

(2) * * *

(viii) Documents intended for destruction in accordance with the Health Insurance Portability and Accountability Act of 1996 (HIPAA) requirements;

(ix) Medical or clinical equipment and laboratory products provided they are properly packaged and secured against exposure or contamination; and

(x) Sharps in sharp containers provided the containers are securely closed to prevent leaks or punctures; do not exceed 18 gallons capacity; registered under the Medical Device Regulations of FDA; made of puncture resistant plastic that meets ASTM Standard F2132–01, Standard Specification for Puncture Resistance of Materials Used in Containers for Discarded Medical Needles and Other Sharps; and are securely fitted into wheeled racks that hold them in an upright position. The wheeled racks must contain full rows of sharps containers secured in place by a moveable bar; and must be securely held in place on the motor vehicle by straps or load bars during transportation. No shelf in any wheeled rack may exceed the manufacturer's recommended load capacity.

* * * * *

16. In § 173.150, paragraph (d) is revised to read as follows:

§ 173.150 Exceptions for Class 3 (flammable and combustible liquids).

* * * * *

(d) Alcoholic beverages. (1) An alcoholic beverage (wine and distilled spirits as defined in 27 CFR §§ 4.10 and 5.11), when transported via motor vehicle, vessel, or rail, is not subject to the requirements of this subchapter if the alcoholic beverage:

(i) Contains 24 percent or less alcohol by volume;

(ii) Is contained in an inner packaging of 5 L (1.3 gallons) or less; or

(iii) Is a Packing Group III alcoholic beverage contained in a packaging 250 liters (66 gallons) or less;

(2) An alcoholic beverage (wine and distilled spirits as defined in 27 CFR §§ 4.10 and 5.11), when transported via aircraft, is not subject to the requirements of this subchapter if the alcoholic beverage:

(i) Contains 24 percent or less alcohol by volume;

(ii) For transportation aboard a passenger-carrying aircraft, contains more than 24 percent but less than 70 percent alcohol by volume when in unopened retail packagings not exceeding 5 liters (1.3 gallons) carried in

carry-on or checked baggage, with a total net quantity per person of 5 liters (1.3 gallons) (See § 175.10(a)(4)).

(iii) For transportation aboard a cargo aircraft contains more than 24 percent but less than 70 percent alcohol by volume in an inner packaging of 5 L (1.3 gallons) or less.

* * * * *

17. In § 173.159a, paragraph (c)(1) is revised to read as follows:

§ 173.159a Exceptions for non-spillable batteries.

* * * * *

(c) Non-spillable batteries are excepted from the packaging requirements of § 173.159 under the following conditions:

(1) Non-spillable batteries must be securely packed in strong outer packagings or secured to skids or pallets capable of withstanding the shocks normally incident to transportation. The batteries must meet the requirements of § 173.159(a), be loaded or braced so as to prevent damage and short circuits in transit, and any other material loaded in the same vehicle must be blocked, braced, or otherwise secured to prevent contact with or damage to the batteries. A non-spillable battery which is an integral part of and necessary for the operation of mechanical or electronic equipment must be securely fastened in the battery holder on the equipment.

* * * * *

PART 177—CARRIAGE BY PUBLIC HIGHWAY

18. The authority citation for part 177 continues to read as follows:

Authority: 49 U.S.C. 5101–5127; 49 CFR 1.53.

19. In § 177.834, paragraph (j)(2) is revised to read as follows:

§ 177.834 General requirements.

* * * * *

(j) * * *

(2) All valves and other closures in liquid discharge systems are closed and free of leaks, except external emergency self-closing valves on MC 338 cargo tanks containing the residue of cryogenic liquids may remain either open or closed during transit.

* * * * *

PART 178—SPECIFICATIONS FOR PACKAGINGS

20. The authority citation for part 178 continues to read as follows:

Authority: 49 U.S.C. 5101–5128; 49 CFR 1.53.

21. In § 178.2, paragraph (c)(1) is revised to read as follows:

§ 178.2 Applicability and responsibility.

* * * * *

(c) *Notification.* (1) Except as specifically provided in §§ 178.337–18, 178.338–19 and 178.345–15 of this part or for empty packagings meeting the requirements specified in§ 173.29(b), the manufacturer or other person certifying compliance with the requirements of this part, and each subsequent distributor of that packaging must:

* * * * *

22. In Appendix E to part 178 Figure 1 and Figure 2 are added following the text.

Appendix E to Part 178—Flame Penetration Resistance Test

* * * * *

BILLING CODE 4910–60–P

Figure 1: Test Apparatus for Horizontal and Vertical Mounting

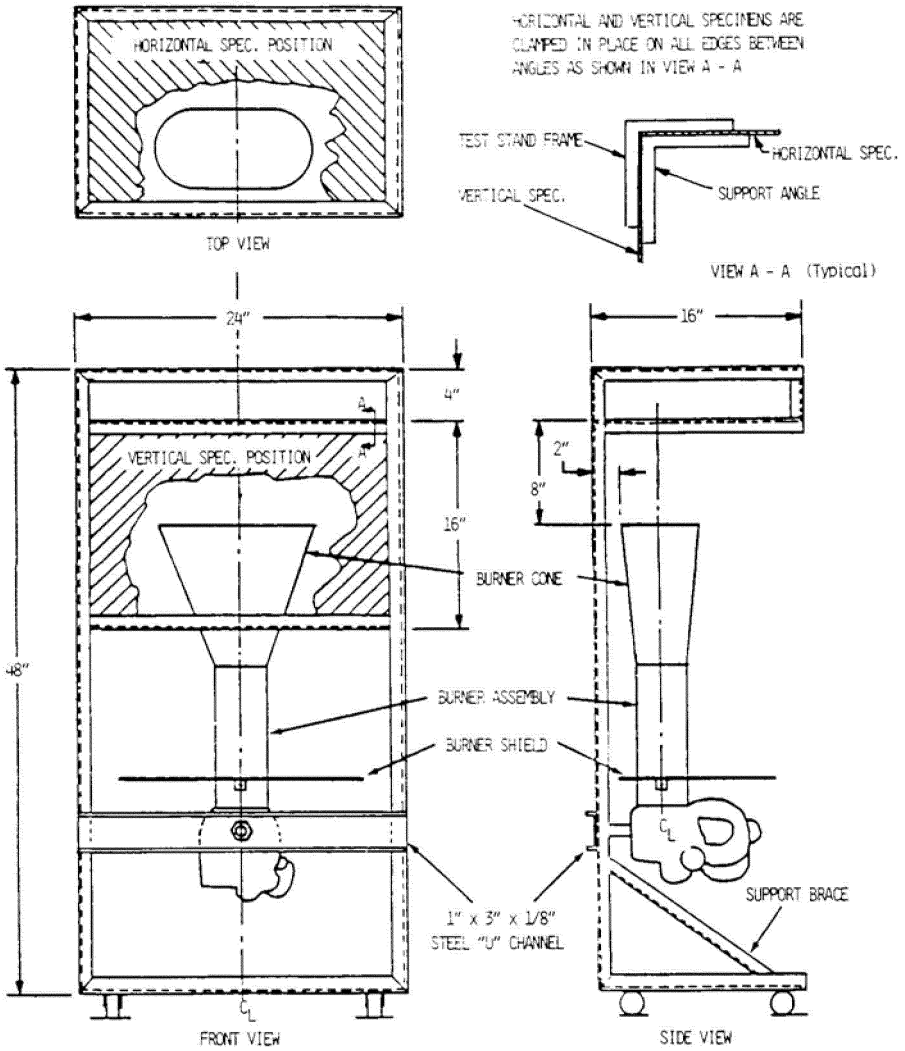

TEST STAND IS CONSTRUCTED WITH 1" x 1" x 1/8" STEEL ANGLES, ALL JOINTS WELDED
SUPPORT ANGLES ARE 1" x 1" x 1/8" CUT TO FIT

FIGURE 1. TEST APPARATUS FOR HORIZONTAL AND VERTICAL MOUNTING

BILLING CODE 4910–60–C

Figure 2: Calorimeter Bracket

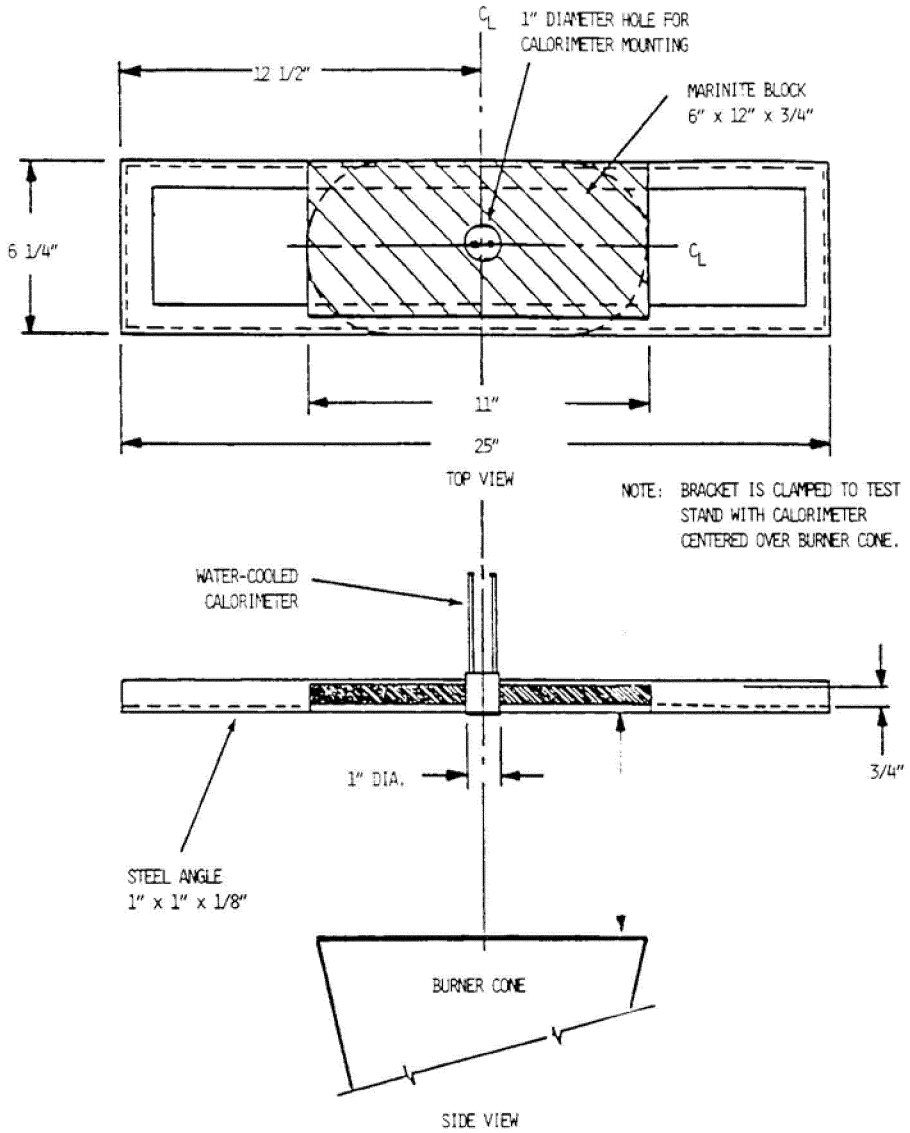

FIGURE 2. CALORIMETER BRACKET

BILLING CODE 4910–60–C

PART 180—CONTINUING QUALIFICATION AND MAINTENANCE OF PACKAGINGS

23. The authority citation for part 180 continues to read as follows:

Authority: 49 U.S.C. 5101–5128; 49 CFR 1.53.

24. In § 180.416, paragraph (d)(5) is revised to read as follows:

§ 180.416 Discharge system inspection and maintenance program for cargo tanks transporting liquefied compressed gases.

* * * * *

(d) * * *

(5) The operator must note each inspection in a record. That record must include the inspection date, the name of the person performing the inspection, the hose assembly identification number, the manufacturer of the hose assembly, the date the hose was assembled and tested, and an indication that the delivery hose assembly and piping system passed or failed the tests and inspections. A copy of each test and inspection record must be retained by the operator at its principal place of business or where the vehicle is housed or maintained until the next test of the same type is successfully completed.

* * * * *

Issued in Washington, DC, on April 19, 2012, under authority elegated in 49 CFR part 106.

R. Ryan Posten,

Deputy Associate Administrator for Hazardous Materials Safety, Pipeline and Hazardous Materials Safety Administration.

[FR Doc. 2012–9895 Filed 4–25–12; 8:45 am]

BILLING CODE 4910–60–P

DEPARTMENT OF THE INTERIOR

Fish and Wildlife Service

50 CFR Part 17

[Docket No. FWS–R2–ES–2012–0016; 4500030114]

Endangered and Threatened Wildlife and Plants; 90-Day Finding on a Petition To List *Aliciella formosa* (Aztec gilia) as Endangered or Threatened With Critical Habitat

AGENCY: Fish and Wildlife Service, Interior.

ACTION: Notice of 90-day petition finding.

SUMMARY: We, the U.S. Fish and Wildlife Service (Service), announce a 90-day finding on a petition to list *Aliciella formosa* (Aztec gilia) as endangered or threatened under the Endangered Species Act of 1973, as amended (Act), and designate critical habitat. Based on our review, we find that the petition does not present substantial information indicating that listing Aztec gilia may be warranted. Therefore, we are not initiating a status review in response to this petition. However, we ask the public to submit to us any new information that becomes available concerning the status of, or threats to, Aztec gilia or its habitat at any time.

DATES: We made the finding announced in this document on April 26, 2012.

ADDRESSES: This finding is available on the Internet at *http://www.regulations.gov* at Docket Number FWS–R2–ES–2012–0016. Supporting documentation we used in preparing this finding is available for public inspection, by appointment, during normal business hours at the U.S. Fish and Wildlife Service, New Mexico Ecological Services Field Office, 2105 Osuna NE., Albuquerque, NM 87113. Please submit any new information, materials, comments, or questions concerning this finding to the above street address.

FOR FURTHER INFORMATION CONTACT: Wally ''J'' Murphy, Field Supervisor, New Mexico Ecological Services Field Office (see **ADDRESSES**) by telephone (505–346–2525) or by facsimile (505–346–2542). Persons who use a telecommunications device for the deaf (TTD) may call the Federal Information Relay Service (FIRS) at 800–877–8339.

SUPPLEMENTARY INFORMATION:

Background

Section 4(b)(3)(A) of the Act (16 U.S.C. 1531 *et seq.*) requires that we make a finding on whether a petition to list, delist, or reclassify a species presents substantial scientific or commercial information indicating that the petitioned action may be warranted. We are to base this finding on information provided in the petition, supporting information submitted with the petition, and information otherwise available in our files. To the maximum extent practicable, we are to make this finding within 90 days of our receipt of the petition and publish our notice of this finding promptly in the **Federal Register**.

Our standard for substantial information within the Code of Federal Regulations (CFR) with regard to a 90-day petition finding is ''that amount of information that would lead a reasonable person to believe that the measure proposed in the petition may be warranted'' (50 CFR 424.14(b)). If we find that substantial scientific and commercial information was presented, we are required to promptly conduct a species status review, which we subsequently summarize in our 12-month finding.

Petition History

On February 12, 2010, we received a petition from the WildEarth Guardians, dated February 12, 2010, requesting that the *Aliciella formosa* (Aztec gilia) be listed as endangered or threatened and that critical habitat be designated under the Act. The petition clearly identified itself as such and included the requisite identification information for the petitioner, as required at 50 CFR 424.14(a). In a July 19, 2010, letter to WildEarth Guardians, we acknowledged receipt of the petition, and reviewed the information presented in the petition and determined that issuing an emergency regulation temporarily listing the species under section 4(b)(7) of the Act was not warranted. This finding addresses the petition.

Previous Federal Actions

For the purposes of this document, we will refer to *Aliciella formosa* by its common name, Aztec gilia.

In September 1985, we published our candidate notice of review (CNOR) classifying Aztec gilia (identified as *Gilia formosa*) as a Category 2 species (50 FR 39526, September 27, 1985). Category 2 status included those taxa for which information in the Service's possession indicated that a proposed listing rule was possibly appropriate, but for which sufficient data on biological vulnerability and threats were not available to support a proposed rule. In the February 1990 CNOR, we retained a Category 2 designation for Aztec gilia (again identified as *Gilia formosa*) (55 FR 6184; February 21, 1990); in the September 1993 CNOR, we announced that the status of Aztec gilia (again identified as *Gilia formosa*) was ''declining,'' but was still considered a Category 2 species (58 FR 51144, September 30, 1993).

In the 1996 CNOR, we announced a revised list of animal and plant taxa that were regarded as candidates for possible addition to the Lists of Endangered and Threatened Wildlife and Plants (61 FR 7596, February 28, 1996). The revised candidate list included only former Category 1 species. All former Category 2 species were dropped from the list in order to reduce confusion about the conservation status of these species, and to clarify that the Service no longer regarded these species as candidates for listing. Because Aztec gilia was a Category 2 species, it was removed from the candidate list in 1996, and was no longer recognized as a candidate species.

Species Information

The Aztec gilia (originally *Gilia formosa*) type specimen was collected prior to 1907, near Aztec, New Mexico (San Juan County), and was subsequently described by E. L. Greene in 1907 (Greene 1907, p. 119; Martin and Hutchins 1980, p. 1584; Kartesz 1994, p. 468). Additional collections are at the U.S. National Herbarium and the Missouri Botanical Gardens (Knight and Cully 1986, p. 5). In 1998, *G. formosa* was reclassified to *Aliciella formosa* (family Polemoniaceae) (Porter 1998, p. 33).

Aztec gilia is a monocarpic herbaceous perennial (a plant that lives for more than 2 years, flowers, sets seed, and then dies) (Porter 1998, p. 33). The plant is up to 30 centimeters (cm) (12 inches (in)) tall. Older plants are woody at the base, are glandular (sticky), and have numerous branched stems with long, sharp-pointed, smooth-edged leaves that are about 25 millimeters (mm) (1.0 in) tall. Flowers are up to 22 mm (0.87 in) long, pinkish-purple, and trumpet-shaped. Aztec gilia blooms from late April through May and is distinguished from several closely related species by its perennial nature, woody base of older plants, entire leaves, and pinkish-purple flowers (New Mexico Native Plants Protection Advisory Committee (NMNPPAC) 1984, p. 218; Knight and Cully 1986, p. 7; Porter 1998, p. 33).

Aztec gilia is only known to occur in San Juan County, near the towns of Aztec and Bloomfield, New Mexico (Knight and Cully 1986, p. 8). This species appears to be found only in

sandy clay soils of the Animas Formation, specifically the Nacimiento Formation, mostly on slopes, benches, and summits of gently rolling hills between 1,740 to 1,890 meters (m) (5,800 to 6,200 feet (ft)) (Knight and Cully 1986, p. 17; Porter 1998, p. 33). The Nacimiento Formation (the southern extension of the Animas Formation of the San Juan Basin) is made up of black and gray shales, with occasional channel sandstone beds (Fassett 1974, p. 229).

Aztec gilia is commonly associated with *Erigeron bistiensis* (Bisti fleabane) and *Sclerocactus cloverae* ssp. *brackii* (Brack's cactus) (Sivinski 1997, pp. 10–12; New Mexico Rare Plant Technical Council (NMRPTC) 2005, p. 2). General habitat associates found in areas inhabited by this species include *Juniperus osteosperma* (Utah juniper), *Pinus edulis* (Pinyon pine), *Purshia tridentata* (antelope bitterbrush), *Cercocarpus montanus* (mountain mahogany), *Amelanchier utahensis* (Utah serviceberry), *Ephedra* spp. (Mormon tea), *Yucca angustissima* (narrowleaf yucca), and *Atriplex confertifolia* (shadscale saltbush) (Sivinski 1997, pp. 10–12).

The petition provided no specific information on Aztec gilia populations. However, the Service's files reflect that Aztec gilia is known from more than 75 populations, ranging in size from a few dozen to thousands of plants (Knight and Cully 1986, p. 18; The Nature Conservancy 1990, p. A–3; DeBruin 1995, p. 6; Ecosphere Environmental Services (Ecosphere) 1995, p. 15; 1997, p. 3; Sivinski 1997, pp. 10–12; Marron *et al.* 2008, p. 26). Surveys estimated about 15,000 plants occur on Bureau of Land Management (BLM) lands, but several surveys only counted the number of populations, indicating that the total number of plants on BLM lands may be higher than 15,000. There are 5 populations of approximately 1,400 total plants on lands owned by the State of New Mexico and 14 populations (unknown number of plants) on private lands (Knight and Cully 1986, p. 20; Sivinski 1997, pp. 10–12). Finally, several Aztec gilia populations are known to occur on Navajo Nation lands in Kutz Canyon (mixed land ownership with BLM), but the number of plants is unknown (Navajo Nation 2008, p. 3; Navajo Natural Heritage Program 2008, p. 89). The petitioner provides no information indicating that any of these populations are declining or have been extirpated. In fact, Knight and Cully (1986, p. 16) reported no populations have ever been extirpated. We do not have any additional information on abundance or long-term monitoring data from populations throughout the range of the species.

In addition to the known populations described above, there appears to be a large amount of potentially suitable habitat unoccupied by the species (Knight and Cully 1986, pp. 16, 23; Sivinski 1997, p. 35). In 1990, the BLM contracted with the Nature Conservancy to conduct survey work within the Farmington Resource Area for several federally listed and sensitive species, including the Aztec gilia. This survey concluded that approximately 5,700 hectares (ha) (14,000 acres (ac)) of public land support thousands of individual plants (The Nature Conservancy 1990, P. A–3). An additional 51,000 ha (125,000 ac) of BLM lands were described as unoccupied potential habitat (The Nature Conservancy 1990, p. A–3). We have no information on the amount of Aztec gilia habitat outside of BLM lands.

Evaluation of Information for This Finding

Section 4 of the Act (16 U.S.C. 1533) and its implementing regulations at 50 CFR 424 set forth the procedures for adding species to, or removing a species from, the Federal Lists of Endangered and Threatened Wildlife and Plants. A species may be determined to be an endangered or threatened species due to one or more of the five factors described in section 4(a)(1) of the Act:

(A) The present or threatened destruction, modification, or curtailment of its habitat or range;

(B) Overutilization for commercial, recreational, scientific, or educational purposes;

(C) Disease or predation;

(D) The inadequacy of existing regulatory mechanisms; or

(E) Other natural or manmade factors affecting its continued existence.

In considering what factors might constitute threats, we must look beyond the mere exposure of the species to the factor to determine whether the species responds to the factor in a way that causes actual impacts to the species. If there is exposure to a factor, but no response, or only a positive response, that factor is not a threat. If there is exposure and the species responds negatively, the factor may be a threat and we then attempt to determine how significant a threat it is. If the threat is significant, it may drive or contribute to the risk of extinction of the species such that the species may warrant listing as endangered or threatened as those terms are defined by the Act. This does not necessarily require empirical proof of a threat. The combination of exposure and some corroborating evidence of how the species is likely impacted could suffice. The mere identification of factors that could impact a species negatively may not be sufficient to compel a finding that listing may be warranted. The information must contain evidence sufficient to suggest that these factors may be operative threats that act on the species to the point that the species may meet the definition of endangered or threatened under the Act.

In making this 90-day finding, we evaluated whether information on threats to the Aztec gilia, as presented in the petition and other information readily available in our files, is substantial, thereby indicating that the petitioned action may be warranted. Our evaluation of this information is presented below.

A. Present or Threatened Destruction, Modification, or Curtailment of the Species' Habitat or Range

The petition states that Aztec gilia and its habitat are threatened by the following: Oil and gas development; surface mining; road construction and use; off-road vehicle (ORV) use; electric transmission line installation; livestock grazing; human population growth; and BLM land uses. Each of these topics is discussed below.

Oil and Gas Development

The petitioner claims that extensive oil and gas development has occurred within the range of Aztec gilia in the San Juan Basin (WildEarth Guardians 2010, pp. 9–12, citing Engler *et al.* 2001; BLM 2003; GO–TECH 2010a-e). The petitioner states that oil and gas extraction causes destruction and degradation of Aztec gilia habitat, and also kills plants. Moreover, the petitioner contends that associated roads, well pads, pipelines, waste pits, power lines, railroad tracks, and other infrastructure used in oil and gas operations cause significant habitat disturbance (WildEarth Guardians 2010, p. 10, citing Weller *et al.* 2002). The petitioner claims that, as of 2010, 18,000 active oil and gas wells were located within the San Juan Basin. The petitioner also claims that there are an additional 9,942 wells authorized over the next 20 years within areas known to be occupied by Aztec gilia (WildEarth Guardians 2010, pp. 9–10, citing BLM 2003). To support these additional wells, the petitioner indicates that 5,794 kilometers (km) (3,600 miles (mi)) of new gas pipeline will have a disturbance footprint of at least 4,709 ha (11,636 ac) (WildEarth Guardians 2010, p. 9, citing Engler *et al.* 2001).

Evaluation of Information Provided in the Petition and Available in Service Files

In reference to the petitioner's claims, the factual description of oil and gas development presented appears plausible. However, the petitioner provided no specific data to support that oil and gas development might impact Aztec gilia populations. Information in our files indicates that some of the oil and gas wells likely overlap with Aztec gilia habitat, but the petition did not contain, nor do we have, any information on the extent or degree of occupied habitat that has been impacted or may be impacted. The petition states that, as of 2010, there are 18,000 active oil and gas wells located in the San Juan Basin. However, the petition does not address how much Aztec gilia habitat or how many populations may have been affected by these oil and gas wells. Habitat for Aztec gilia does not encompass the entirety of the San Juan Basin.

Despite the claim that destruction and degradation of Aztec gilia habitat has occurred from oil and gas activities, the petitioner does not provide citations or other substantial information to support their assertions regarding the present or threatened destruction, modification, or curtailment of habitat or range from oil and gas activities. On the contrary, the petitioner cites that this plant tolerates and recovers from some habitat disturbance (NatureServe 2009). Similarly, Sivinski (1997, p. 11) found a re-establishing occurrence of about 100 plants on a gas well pad and several other healthy populations near well pads and roads. Our files also contain BLM reports that summarize 4 years of monitoring (1991–1995) indicating a significant overall increase in the abundance of Aztec gilia, including those plots associated with oil and gas extraction activities (BLM 1996, pp. 6–8; DeBruin 1995, entire). The BLM concluded that oil and gas, among other activities, did not cause the extirpation of plants, but populations associated with oil and gas activities contained younger individuals (seedlings and juveniles) (DeBruin 1995, p. 8; BLM 1996, pp. 6–8). This information illustrates that the species may be tolerant of disturbance. Based on this review, we find that the information provided in the petition, as well as other information readily available in our files, does not present substantial scientific or commercial information indicating that oil and gas development constitutes a threat to the destruction, modification, or curtailment of Aztec gilia's habitat or range.

Surface Mining

The petitioner claims that surface mining has occurred within the range of Aztec gilia in the San Juan Basin (WildEarth Guardians 2010, pp. 2 and 18). The petitioner states that surface mining causes destruction and degradation of Aztec gilia habitat, and causes direct plant mortality. The BLM's 2003 Resource Management Plan (RMP) indicates that surface mining, specifically coal leases, will continue to be managed as specified in their 1988 RMP, with new coal leases considered on a case-by-case basis (BLM 2003, p. 8). The extent of surface mining leases that overlap with occupied Aztec gilia habitat was not provided by the petitioner nor do we have any readily available information on the extent or degree of occupied habitat that has been or may be impacted by surface mining activities.

Evaluation of Information Provided in the Petition and Available in Service Files

In reference to the petitioner's claims, the factual description of surface mining presented appears plausible. The petitioner cites the BLM's 2003 RMP in the discussion of multiple use activities, which includes surface mining, on BLM land; however, the petitioner provided no specific data to support how surface mining might impact Aztec gilia populations. Despite the claim that surface mining could detrimentally affect Aztec gilia habitat, the petitioner does not provide citations or other substantial information to support their assertions regarding the present or threatened destruction, modification, or curtailment of habitat or range from surface mining. Therefore, we find that the information provided in the petition, as well as other information readily available in our files, does not present substantial scientific or commercial information indicating that surface mining constitutes a threat to the destruction, modification, or curtailment of Aztec gilia's habitat or range.

Road Construction and Use

The petitioner states that road construction and use can detrimentally impact imperiled plants, including Aztec gilia, through soil compaction, soil erosion, spread of noxious weeds, heavy metals, and dust pollution, which can alter water flows, destabilize slopes, and offer increased access by ORVs (WildEarth Guardians 2010, p. 14, citing Forman and Alexander 1998; Trombulak and Frissell 2000; Glebard and Belknap 2003). The petitioner asserts that road density is high in the Aztec gilia's range and is increasing due to oil and gas activities (WildEarth Guardians 2010, p. 15, citing BLM 2008b). The petition does not define or quantify the parameters used to describe road density as ''high''. The petitioner claims that one of the objectives in the 2003 BLM RMP is to improve existing roads, and that the maintenance activities associated with road improvement would increase disturbance to adjacent areas (WildEarth Guardians 2010, p. 14). The petitioner also asserts that the human populations in the towns of Farmington, Bloomfield, and Aztec, New Mexico, increased approximately 9 to 13 percent between the years 2000 and 2008, which may suggest that more roads will be constructed (WildEarth Guardians 2010, p. 14). The petitioner provides one example of a proposed road construction project within the City of Aztec, where 16 Aztec gilia plants might potentially be destroyed incidentally (WildEarth Guardians 2010, p. 14, citing Marron *et al.* 2008), but no further information was provided by the petitioner or found in our files.

Evaluation of Information Provided in the Petition and Available in Service Files

In reference to the petitioner's claims concerning impacts from road construction and use, the factual description presented appears plausible. However, we reviewed citations provided by the petitioner and assertions regarding road construction and use, and find that the petitioner's statements concerning detrimental impacts from road construction and use to be unsubstantiated. The petition fails to describe how and to what extent roads may be affecting the species. There is no information with regards to whether the proposed City of Aztec road was built or if any plants were impacted. Nonetheless, the majority of habitat is on Federal land, and the potential loss of plants on City of Aztec lands is likely not significant to the overall population. On BLM lands, surveys are required prior to project implementation (see discussion under Factor D, below). Under the BLM's Special Status Species policy, if Aztec gilia individuals are discovered on BLM lands, the agency requires that the project proponent minimize or avoid impacts. Therefore, we find that the information provided in the petition, as well as other information readily available in our files, does not present substantial scientific or commercial information indicating that road use and construction constitutes a threat to the

destruction, modification, or curtailment of Aztec gilia's habitat or range.

Off-Road Vehicles

The petitioner asserts that ORV use is detrimental to native vegetation and imperiled plants (Stokowski and Lapointe 2000; WildEarth Guardians 2010, p. 17 citing BLM 2006) and that the amount of ORV use on the Farmington Field Office BLM lands is increasing (BLM 2003). The petitioner claims that ORVs can access BLM lands that are occupied by Aztec gilia, or contain potentially suitable habitat, and that ORVs could run over and kill plants (WildEarth Guardians 2010, pp. 17, 19). Further, the petitioner believes that ORV use is not limited to designated trails within a large, unquantified area of potentially suitable Aztec gilia habitat (WildEarth Guardians 2010, p. 17). The petitioner suggests that the number of juvenile Aztec gilia is reduced in these areas with high ORV use (WildEarth Guardians 2010, p. 19, citing NatureServe 2009).

Evaluation of Information Provided in the Petition and Available in Service Files

In reference to the petitioner's claim concerning impacts from ORVs, the factual description of impacts from ORV use presented appears plausible. Information in the petition discusses that ORV use can impact native vegetation and imperiled plants, in general (Stokowsi and Lapointe 2000, p. 3; BLM 2006, p. 58).

No information was presented indicating that ORV use is detrimental to Aztec gilia. ORV users can likely access areas with Aztec gilia populations and potentially suitable habitat (BLM 2003, pp. 3, 7; BLM 2006, pp. 42, 66). We also reviewed NatureServe (2009, p. 2) but could not substantiate the petitioner's claim that higher ORV use resulted in reduced juvenile Aztec gilia plants. In fact, DeBruin (1995, p. 7) found that plots disturbed by ORV use had the greatest increase in new recruits of Aztec gilia. Nevertheless, we acknowledge that ORVs partially damaged one monitoring plot of Aztec gilia, but note that the majority of the damage is likely due to a combination of drought and pipeline construction (Floyd-Hanna 1993, p. 8). We believe that this level of impact may not be significant to the species, because it did not result in the extirpation of Aztec gilia at this location. Moreover, Sivinski (1997, p. 11) reported healthy populations of Aztec gilia adjacent to an area heavily impacted by ORV traffic and in an area with a single gas well pad, road, and a motorcycle trail through the middle of the species' habitat. Based on this review, we find that the information provided in the petition, as well as other information readily available in our files, does not present substantial scientific or commercial information indicating that ORV use constitutes a threat to the destruction, modification, or curtailment of Aztec gilia's habitat or range.

Electric Transmission Lines

The petitioner claims that in 2008, the city of Farmington, New Mexico, and their electric company, Kinder Morgan, proposed to construct a 14-mile electric transmission line that had known occurrences of Aztec gilia within the project area (WildEarth Guardians 2010, p. 17, citing City of Farmington 2008). The transmission line right-of-way is mostly on Federal land administered by the BLM with a few sections on State and private land (City of Farmington 2008).

Evaluation of Information Provided in the Petition and Available in Service Files

In reference to the petitioner's claim concerning impacts from an electric transmission line installation by the City of Farmington, New Mexico, the factual information presented appears plausible. No information was presented that indicates there were direct impacts on plants, nor is there any documentation of direct or indirect impacts to Aztec gilia from this project in our files. We reviewed information provided by the petitioner and found that 10 Aztec gilia plants were located within the preliminary right-of-way for the project; however, the final design avoided all plants (City of Farmington 2008, p. 32). Under the BLM's 2003 RMP, if Aztec gilia individuals are discovered on BLM lands, the agency requires that the project proponent minimize or avoid impacts (see discussion under Factor D, below) (City of Farmington 2008, Exhibit A, p. 5). Also, readily available information in our files indicates that other transmission line projects have similarly avoided damaging or destroying Aztec gilia plants. In 1987, Aztec gilia plants were also avoided along a proposed transmission line associated with the Navajo Dam project (City of Farmington 1987, p. 1). Additionally, Farmington Electric Utility Services, in coordination with the BLM, also avoided 21 populations with approximately 550 plants near the Potter Canyon compressor station electric utility powerline (Ecosphere 1997, p. 1). For these reasons, we find that the information provided in the petition, as well as other information readily available in our files, does not present substantial scientific or commercial information indicating that electric transmission line construction constitutes a threat to the destruction, modification, or curtailment of Aztec gilia's habitat or range.

Livestock Grazing

The petitioner claims that domestic livestock grazing occurs within Aztec gilia's habitat on private, Navajo Nation, New Mexico State, and BLM lands (WildEarth Guardians 2010, p. 17). The petitioner asserts that the BLM disregarded livestock grazing as a potential threat in an environmental assessment for two grazing allotments within areas that potentially contain suitable habitat for Aztec gilia, because neither plant surveys nor mitigation measures were mentioned in that assessment (WildEarth Guardians 2010, p. 17, citing BLM 2009; WildEarth Guardians 2010a, b). The petitioner believes that livestock grazing spreads noxious weeds and invasive plants that could alter the habitat for Aztec gilia (WildEarth Guardians 2010, p. 17, citing Fleischner 1994; Belsky and Gelbard 2000; DiTomaso 2000; Parker *et al.* 2006). The petitioner further claims that grazing compacts soil, increases erosion, and results in soil degradation. Moreover, the petitioner asserts that livestock trample and eat Aztec gilia.

Evaluation of Information Provided in the Petition and Available in Service Files

In reference to the petitioner's claim concerning impacts from domestic livestock grazing, the factual information presented appears plausible. The petitioner states that domestic livestock grazing occurs on private, BLM, New Mexico State, and Navajo Nation lands. The petitioner states that grazing can destroy and degrade Aztec gilia habitat by promoting the spread of noxious weeds and invasive plants that could outcompete the Aztec gilia and by trampling the soil, leading to compaction and erosion of Aztec gilia habitat (WildEarth Guardians 2010, p. 17). In addition, Aztec gilia plants may be trampled and eaten by livestock.

However, the citations listed for this statement do not involve New Mexico private or State land, or BLM or Navajo Nation land, further, they are not citations specific to Aztec gilia (WildEarth Guardians 2010, p. 17, citing Fleischner 1994; Belsky and Gelbard 2000; DiTomaso 2000; Parker *et al.*

2006). Likewise, we have no substantial readily available information in our files regarding grazing as a possible threat to Aztec gilia, or whether grazing co-occurs with the species on New Mexico State or private lands. Additionally, DeBruin (1995, p. 7) monitored Aztec gilia over 4 years and found the species responded positively (*i.e.,* increased in number) when disturbed by livestock. Finally, we have no readily available information in our files regarding the threat to Aztec gilia and its habitat from noxious weeds and invasive species that may be spread by livestock grazing. The BLM's 2003 RMP outlines that the goals of the Livestock Management program include promoting native plant health, and soil stability, and providing the basic requirements of rangeland ecological sites. Based on this review, we find that the information provided in the petition, as well as other information readily available in our files, does not present substantial scientific or commercial information indicating that the livestock grazing, and the possible spread of noxious weeds and invasive species constitutes a threat to the destruction, modification, or curtailment of Aztec gilia's habitat or range.

Human Population Growth

The petitioner asserts that human population growth of Aztec, Bloomfield, and Farmington, New Mexico, will increase commercial and residential construction, farming, and recreational impacts and will result in a threat to Aztec gilia and its habitat (WildEarth Guardians 2010, p. 18).

Evaluation of Information Provided in the Petition and Available in Service Files

The petitioner provided no specific information, nor do we have any readily available information in our files, to substantiate the extent of human population growth and its potential impact on Aztec gilia. Furthermore, the petitioner provided no specific information, nor do we have any readily available information in our files, to substantiate if human population growth would result in any increase in commercial and residential construction, farming, or recreational impacts and their potential impact on Aztec gilia. Therefore, we find that the information provided in the petition, as well as other information readily available in our files, does not present substantial scientific or commercial information indicating that human population growth constitutes a threat to the destruction, modification, or curtailment of Aztec gilia's habitat or range.

Other BLM Land Uses

The petitioner asserts that a variety of activities occur on BLM land that could detrimentally affect Aztec gilia habitat including mining, motorized and non-motorized vehicle use on roads and trails, hiking, horseback riding, camping, and infrastructure developments such as picnic ground and camping areas (WildEarth Guardians 2010, p. 18).

Evaluation of Information Provided in the Petition and Available in Service Files

In reference to the petitioner's claim concerning impacts from other BLM land uses, the factual information presented appears plausible. The petitioner cites the BLM's 2003 RMP in the discussion of multiple use activities on BLM land; however, the petitioner provided no specific data to support how these other land uses might impact Aztec gilia populations. Despite the claim that these other land uses could detrimentally affect Aztec gilia habitat, the petitioner does not provide citations or other substantial information to support their assertions regarding the present or threatened destruction, modification, or curtailment of habitat or range from other BLM land uses. Therefore, we find that the information provided in the petition, as well as other information readily available in our files, does not present substantial scientific or commercial information indicating that other BLM land uses constitute a threat to the destruction, modification, or curtailment of Aztec gilia's habitat or range.

In summary, on the basis of a review of the information provided by the petitioner and readily available in our files, we determined that the petition does not present substantial information to indicate that listing Aztec gilia may be warranted due to the present or threatened destruction, modification, or curtailment of its habitat or range by any threats, including oil and gas development, surface mining, road construction and use, off-road vehicles, electric transmission line construction, livestock grazing, human population growth, or other BLM land uses.

B. Overutilization for Commercial, Recreational, Scientific, or Educational Purposes

Information Provided in the Petition

The petitioner cites that plants and seeds of Aztec gilia have been collected in the past by permit for mitigation efforts. However, the petioner does characterize the collection of Aztec gilia plants and seeds for mitigation purposes as overutilization (WildEarth Guardians 2010, p. 19).

Evaluation of Information Provided in the Petition and Available in Service Files

Readily available information in our files confirms that plants and seeds have been collected under a BLM permit (Floyd-Hanna 1994, entire; Ecosphere 1996, entire; BLM 1996, p. 5; Reeves 1996, entire; Murray 2006, p. 1). We do not know how many seeds were collected on BLM lands, thus we have no evidence of possible overutilization impacts to the species resulting from these activities. In addition, based on Service experience, the amount of seeds and plants collected for mitigation purposes is usually collected in a sustainable fashion so as not to impact the extant populations. In summary, on the basis of a review of the information provided by the petitioner and readily available in our files, we determined that the petition does not present substantial information to indicate that listing Aztec gilia may be warranted due to overutilization for commercial, recreational, scientific, or educational purposes. Therefore, we have determined that the petition does not present substantial information to indicate that listing may be warranted under this factor.

C. Disease or Predation

Information Provided in the Petition

The petitioner provides no information pertaining to Factor C.

Evaluation of Information Available in Service Files

Information in our files indicates that moth larvae (family Gelechiidae) may at times bore into the lower, woody caudex of Aztec gilia, contributing to mortality (Porter and Floyd 1992, p. 246; Floyd-Hanna 1993, p. 8). However, we have no information indicating that any populations have been significantly affected by moth larvae. We have no information of any other disease or predation potentially affecting the species. In summary, on the basis of a review of the information provided by the petitioner and readily available in our files, we determined that the petition does not present substantial information to indicate that listing Aztec gilia may be warranted due to disease or predation. Therefore, we have determined that the petition does not present substantial information to

indicate that listing may be warranted under this factor.

D. The Inadequacy of Existing Regulatory Mechanisms

Information Provided in the Petition

The petitioner asserts that Aztec gilia is not adequately protected by Federal or State laws or policies to prevent its endangerment or extinction. The petition reports that Aztec gilia is listed as endangered by the State of New Mexico; however, the petitioner claims that this designation provides little regulatory protection for the habitat of the species (WildEarth Guardians 2010, p. 18, citing New Mexico Energy, Minerals, and Natural Resources Department 1995). The petitioner states that the Navajo Nation lists the species as endangered (WildEarth Guardians 2010, p. 18, citing Navajo Nation 2008). This information is incorrect. The Navajo Nation has this species listed as G4, which is defined as any species or subspecies for which the Navajo Nation Department of Fish and Wildlife (NNDFWL) does not currently have sufficient information to support listing the species as G2 or G3 (endangered), but is actively seeking information to determine if this species warrants further protection on the Navajo Nation. The petition also states that NatureServe classifies this species as G2, globally imperiled; N2, nationally imperiled; S1 critically imperiled in the Navajo Nation; and S1, imperiled in the State of New Mexico (WildEarth Guardians 2010, p. 18, citing NatureServe 2009). The G2 status is defined as imperiled because it is a very narrow endemic dependent on soil type and has a high risk for extinction. The N2 status defined as imperiled due to a restricted range and very few populations; with a high risk for extirpation. The S1 status is critically imperiled because of extreme rarity or because of some factor(s), such as very steep declines, making it especially vulnerable to extirpation. The petition reports that the plant was previously a Category 2 species, indicating that the Service believed that listing the species may be appropriate; now Aztec gilia is considered a species of concern by the Service (WildEarth Guardians 2010, p. 18). The petitioner cites that Aztec gilia is also a BLM sensitive species and special management species; however, the petitioner further claims that these designations provide no protection or mitigation for impacts (WildEarth Guardians 2010, pp. 18–19, citing BLM 2009).

Finally, the petitioner states that inadequate regulatory protection exists for an area managed by the BLM and known to be occupied by Aztec gilia. That area, designated as the Aztec Gilia Area of Environmental Concern (ACEC) is approximately 2,833 ha (7,000 ac) in size; however, the BLM rescinded the designation in 2003 (WildEarth Guardians 2010, pp. 9–10). The petitioner claims that oil and gas development, of up to 153 well sites, could occur within the former ACEC. Moreover, an additional 395 well sites could potentially be developed within Kutz Canyon on the Navajo Nation, another area where Aztec gilia occurs (WildEarth Guardians 2010, pp. 9–10, citing BLM 2003).

Evaluation of Information Provided in the Petition and Available in Service Files

In reference to the petitioner's claim concerning the inadequacy of existing regulatory mechanisms, the information is not factually correct, particularly related to the statements regarding the Navajo Nation's status of the species, as explained above. The information in the petition and currently available in our files does not indicate that Aztec gilia is threatened by the inadequacy of existing regulatory mechanisms. This petition identifies risk classifications made by other organizations such as NatureServe or State Agencies, as evidence of extinction risk for a species. Risk classifications by other organizations or made under other Federal or State statutes may be informative, but the classification alone does not provide the rationale for a positive 90-day finding under the Act. For example, as explained by NatureServe, their assessments of a species' conservation status do ''not constitute a recommendation by NatureServe for listing under the U.S. Endangered Species Act'' because NatureServe assessments ''have different criteria, evidence requirements, purposes and taxonomic coverage than government lists of endangered and threatened species, and therefore these two types of lists should not be expected to coincide'' (*http://www.natureserve.org/prodServices/statusAssessment.jsp*).

We find that Aztec gilia receives no protection from the NatureServe designations because these lists only serve to notify the public of the species' status and do not require any conservation or management actions or provide any regulatory authority for conservation of species.

The State of New Mexico lists Aztec gilia as endangered. As such, Aztec gilia is protected from unauthorized collection, transport, or sale by the New Mexico Endangered Plant Species Act, 75–6–1 NMSA 1978. This law prohibits the taking, possession, transportation and exportation, selling or offering for sale any listed plant species. Listed species can only be collected under permit from the State of New Mexico for scientific studies and impact mitigation; however, this law does not provide any protection for Aztec gilia habitat. There are no statutory requirements under the jurisdiction of the State of New Mexico that serve as an effective regulatory mechanism for reducing or eliminating the threats that may adversely affect Aztec gilia habitat. There are also no requirements under the New Mexico State statutes to develop a recovery plan that will restore and protect existing habitat for the species.

The petitioner incorrectly claims that Aztec gilia is listed as an endangered species on the Navajo Nation. The species is classified as a G4 species, which means that the NNDFWL does not currently have sufficient information to support it being listed as an endangered species (Navajo Nation 2008, pp. 1, 3). As such, the NNDFWL actively seeks information on this species to determine if it warrants protection. Because Aztec gilia is listed as a G4 species, there is no regulatory protection provided to the species on the Navajo Nation.

The ACEC was established in the BLM's Farmington Field Office 1988 RMP, but was rescinded in 2003, when the RMP was revised (2003 RMP). During the revision, the BLM determined that lands within the ACEC were already leased for oil and gas exploration prior to the 1988 designation and the ACEC contained poor quality habitat for Aztec gilia (DeBruin 1991, entire; DeBruin 1995, pp. 10–11; BLM 2003, p. 3). The petition implicitly relies on a general assumption that rescinding the ACEC would be detrimental to the species, but does not include any information regarding the improved protections from the species-specific measures provided by the 2003 RMP.

Nearly 70 percent (52 of 75) of the Aztec gilia occurrences are completely or partially on Federal land, and are therefore protected under the 2003 RMP and the Aztec gilia's status as a BLM special management species. For example, on BLM lands, Aztec gilia is managed as a candidate for Federal listing in order to minimize impacts and preclude listing. As a BLM special management species, all of the protections provided by the pre-2003 ACEC apply. Additionally, the BLM's Special Management Species Policy requires biological surveys prior to project implementation in known or

suitable Aztec gilia habitat. If plants or suitable habitat are found, the pad or pipeline must be relocated and directional drilling can be used as needed. Avoidance is the primary conservation measure; transplanting plants is only used as a last resort. As such, the BLM currently provides protective measures throughout habitat with the potential to support Aztec gilia. Based on our evaluation, we conclude that the 2003 RMP is more protective than the 1988 RMP and previous ACEC designation. The current guidelines under the 2003 RMP will minimize various impacts to Aztec gilia across the San Juan Basin (BLM 2003, pp. 3, 2.32; BLM 2008a, entire). Consequently, the petition fails to present substantial information indicating that the withdrawal of the ACEC designation is a threat. Further, we have no information concerning the potential well sites within the previous ACEC or Kutz Canyon, nor is there any documentation that if these sites were developed the species would be threatened.

The petitioner correctly notes that the Service identifies Aztec gilia as a species of concern (Service 2010). While not a formal legal designation under Service regulations, a species of concern is defined as a taxon for which further biological research and field study are needed to resolve its conservation status or which is considered sensitive, rare, or declining on lists maintained by Natural Heritage Programs, State wildlife agencies, other Federal agencies, or professional and academic scientific societies. Species of concern are identified for planning purposes only, and the title confers no regulatory protection.

The information in the petition and currently available in our files indicates that the existing regulatory mechanisms are providing adequate protection for the species. We find that the petitioner's claim that there are few protections within the range of Aztec gilia does not constitute an argument for inadequacy of existing regulations, because we do not find substantial evidence that there are any threats to Aztec gilia. Based on our evaluation of the information presented in the petition and readily available in our files, we have determined that the petition does not present substantial information to indicate that listing Aztec gilia may be warranted due to the inadequacy of existing regulatory mechanisms.

E. Other Natural or Manmade Factors Affecting the Species' Continued Existence

The petitioner asserts that the following conditions under Factor E threaten Aztec gilia: Mitigation techniques; climate change; and the plant's narrow range. Each of these potential threats is discussed below.

Mitigation Techniques

The petitioner asserts there has been difficulty with mitigation efforts involving transplanting or reseeding of Aztec gilia and collection of seeds (WildEarth Guardians 2010, pp. 19–20). The petitioner indicates that Federal agencies generally avoid transplanting for mitigation purposes because they rarely succeed (WildEarth Guardians 2010, p. 19, citing U.S. Army Corp of Engineers 1997).

Evaluation of Information Provided in the Petition and Available in Service Files

In reference to the petitioner's claim concerning difficulties with mitigation techniques, the factual information presented appears plausible. Our records indicate that for one project, Aztec gilia was transplanted and monitored from 1990 to 1995 (BLM 1996, pp. 5–6). The transplants had a 5 percent survival rate (Ecosphere 1996, p. 6). Another project in 1991, transplanted 92 Aztec gilia; by 1994, only 5 individuals survived, and by 1996, only 2 individuals survived (BLM 1996, p. 7; Floyd-Hanna 1994, pp. 5–6). As a result of these attempts, the BLM does not consider transplanting to be viable mitigation. We found one reseeding report in our files that summarized Aztec gilia germination efforts in a greenhouse where there was 100 percent mortality before seedlings reached transplantable size (Reeves 1996, entire). Another report demonstrated that seed collection can be difficult in some years (Murray 2006, entire). No specific information was provided or is readily available in our files, to indicate that population size, range, and number of populations are so restricted that the limited success of transplanting, reseeding, or seed collection efforts are detrimental to the species. In addition, the petition did not provide evidence that mitigation techniques may pose a threat to Aztec gilia. Therefore, we find that the information provided in the petition, as well as other information readily available in our files, does not present substantial scientific or commercial information indicating that the petitioned action may be warranted due to concerns about mitigation techniques.

Climate Change

The petitioner claims that, because of its restricted range, Aztec gilia is threatened by climate change predictions of rising temperatures and increased duration of drought (WildEarth Guardians 2010, p. 20, citing Parmesan *et al.* 2000; National Safety Council (NSC) 2003; Intergovernmental Panel on Climate Change (IPCC) 2007; U.S. Climate Change Science Program (CCSP) 2008; Karl *et al.* 2009). The petitioner cites Allen and Breshears (1998), who predict that climate change would cause unprecedented rates of vegetation shifts due to increased warming, especially along boundaries of semi-arid ecosystems (WildEarth Guardians 2010, p. 21). The petitioner states that climate change effects are being tracked in New Mexico, and temperatures are warming at a rate comparable to projections for the next century with continued increases of greenhouse gases (WildEarth Guardians 2010, p. 20, citing Enquist and Gori 2008).

Evaluation of Information Provided in the Petition and Available in Service Files

In reference to the petitioner's claim concerning impacts from climate change, the factual information presented appears plausible. The petitioner does not cite any information or publications in support of the claim that there is a substantiated relationship between climate change and the persistence of Aztec gilia. At a global or regional scale, the Service acknowledges that climate change could result in rising temperatures and increased drought periods, based on models and research cited in the petitioner's references (IPCC 2007a, pp. 30, 48; Karl *et al.* 2009, pp. 129–134; NSC 2003, p. 38; Parmesan *et al.* 2000, entire; CCSP 2008, pp. 37–46). The Service also recognizes that vegetation shifts could occur in semi-arid ecosystems as a result of climate change, even though citations provided by the petitioner (Allen and Breshears 1998, entire) discuss forest-woodland ecotones where Aztec gilia does not occur. Enquist and Gori (2008, pp. 4–7) used 30-year climate data from New Mexico to develop trend climatology maps applied to specific conservation areas. Their results indicate that the Colorado Plateau ecoregion in the far northwestern portion of New Mexico, where Aztec gilia does occur, had a climate exposure score in the 78th percentile, which is considered a

moderate to high ranking, meaning this ecoregion is more likely to have negative ecological impacts from warming (Enquist and Gori 2008, pp. 20, 32).

We acknowledge that current climate projections indicate that warming in the U.S. Southwest will persist, and may worsen (IPCC 2007b, p. 15; IPCC 2007c, p. 887). However, we find the information presented in the petition and readily available in our files on the subject of climate change to be insufficiently specific to Aztec gilia to be considered substantial. Additionally, no data are available to evaluate whether long-term weather patterns have negatively affected the habitat or population sizes of Aztec gilia. In fact, we are not aware of any Aztec gilia populations that have been extirpated since 1986, nor are we aware of monitoring data to compare population sizes to determine whether there has been a downward trend in the number of plants across the range of the species. Based on these results, we find that the information provided in the petition, as well as other information readily available in our files, does not present substantial scientific or commercial information indicating that the petitioned action may be warranted due to threats from climate change.

Narrow Range

The petitioner states that because the Service routinely recognizes small population size and restricted range as increasing the likelihood of extinction, Aztec gilia should be considered particularly vulnerable (WildEarth Guardians 2010, p. 21). The petitioner asserts that the species' limited range indicates vulnerability to weather events, such as drought and storms, suggesting the Service should consider this plant's narrow range a threat to the taxon (WildEarth Guardians 2010, p. 21).

Evaluation of Information Provided in the Petition and Available in Service Files

No specific information was provided or is available in our files to indicate that Aztec gilia may be imperiled by its population size or narrow range. The petitioner provides information about generalized threats to other species with limited population size or small geographic ranges, but they are located on islands in the Pacific Ocean and not relevant to Aztec gilia. Therefore, we find that the information provided in the petition, as well as other information readily available in our files, does not present substantial scientific or commercial information indicating that the petitioned action may be warranted due to concerns about small population sizes and a narrow range.

Finding

The petition does not present substantial information on whether oil and gas activities, surface mining, road construction and use, off-road vehicle use, electric transmission line construction, domestic livestock grazing, human population growth, other BLM land uses, inadequate regulatory mechanisms, limited ability to reseed or transplant, climate change, small population size, or a restricted range may threaten Aztec gilia populations and their habitat. Even though Aztec gilia and its habitat may be exposed to the factors listed above, this does not necessarily mean that the species may be threatened by those factors. We found very few negative impacts to the plant resulting, or documented, from the potential threats cited in the petition or in our review of information readily available in our files. The petitioner cites generalized information about potential impacts that can occur due to these situations and stressors. Little information is presented in the petition regarding the magnitude of potential impacts on the species, or whether the potential impacts may have population-level effects. The loss of a few individuals does not necessarily mean that the species may be in danger of extinction. Our review of the readily available information indicates that the species appears to be maintaining its presence in all known locations throughout its range.

In summary, we find no information to suggest that threats are acting on Aztec gilia such that the species may be in danger of extinction now or in the foreseeable future. On the basis of our determination under section 4(b)(3)(A) of the Act, we conclude that the petition does not present substantial scientific or commercial information to indicate that listing Aztec gilia under the Act as endangered or threatened may be warranted at this time.

Although we will not review the status of the species at this time, we encourage interested parties to continue to gather data that will assist with the conservation of Aztec gilia. If you wish to provide information regarding Aztec gilia, you may submit your information or materials to the Field Supervisor/Listing Coordinator, New Mexico Ecological Services Field Office, U.S. Fish and Wildlife Service (see **ADDRESSES** section, above), at any time.

References Cited

A complete list of all references cited in this finding is available upon request from the New Mexico Ecological Services Field Office (see **ADDRESSES** section, above).

Authors

The primary authors of this rule are the staff members of the New Mexico Ecological Services Office (see **FOR FURTHER INFORMATION CONTACT**).

Authority

The authority for this action is the Endangered Species Act of 1973, as amended (16 U.S.C. 1531 *et seq.*).

Dated: April 18, 2012.

Gregory E. Siekaniec,

Deputy Director, Fish and Wildlife Service.

[FR Doc. 2012–10049 Filed 4–25–12; 8:45 am]

BILLING CODE 4310–55–P

DEPARTMENT OF THE INTERIOR

Fish and Wildlife Service

50 CFR Part 17

[Docket No. FWS–R6–ES–2011–0030; FXES11130900000C6–123–FF09E30000; 92220–1113–0000–C6]

RIN 1018–AW02

Endangered and Threatened Wildlife and Plants; Revising the Proposed Special Rule for the Utah Prairie Dog

AGENCY: Fish and Wildlife Service, Interior.

ACTION: Supplemental notice of proposed rulemaking; reopening of public comment period and notice of document availability.

SUMMARY: We, the U.S. Fish and Wildlife Service (Service) notify the public that we are making changes to our proposed rule of June 2, 2011, to revise the special rule for the Utah prairie dog (*Cynomys parvidens*). We are reopening the comment period because we are making substantive changes and one addition to our proposed rule based on public and peer review comments received. Comments previously submitted will be considered and do not need to be resubmitted now. However, we invite comments on the new information presented in this announcement relevant to our consideration of these changes, as described below. We encourage those who may have commented previously to submit additional comments, if appropriate, in light of this new information. We are also making available for public review the draft

Environmental Assessment (EA) on our proposed actions, in accordance with the National Environmental Policy Act.

DATES: To ensure that we are able to consider your comments and information, we request that we receive them no later than May 29, 2012. Please note that, if you are using the Federal eRulemaking Portal (see **ADDRESSES**, below), the deadline for submitting an electronic comment is 11:59 p.m., Eastern Daylight Saving Time on this date. We may not be able to address or incorporate information that is submitted after the above requested date. We must receive requests for public hearings, in writing, at the address shown in **FOR FURTHER INFORMATION CONTACT** by May 11, 2012.

ADDRESSES: Electronic copies of the 2011 proposed revision to the special rule for the Utah prairie dog, comments received on that proposal, and the draft EA for the proposed special rule can be obtained at *http://www.regulations.gov,* Docket No. [FWS–R6–ES–2011–0030]. You may submit comments by one of the following methods:

Electronically: Go to the Federal eRulemaking Portal: *http://www.regulations.gov*. In the Search box, enter Docket No. [FWS–R6–ES–2011–0030], which is the docket number for this rulemaking. Follow the instructions for submitting a comment.

By hard copy: Submit by U.S. mail or hand-delivery: to Public Comments Processing, Attention: [FWS–R6–ES–2011–0030]; Division of Policy and Directives Management; U.S. Fish and Wildlife Service; 4401 North Fairfax Drive, MS 2042–PDM; Arlington, VA 22203.

We will post all comments on *http://www.regulations.gov.* This generally means that we will post any personal information you provide us (see the Public Comments section below for more details).

Copies of Documents: The June 2, 2011, proposed rule and draft EA are available on *http://www.regulations.gov.* In addition, the supporting files for the proposed rule and draft EA will be available for public inspection, by appointment, during normal business hours, at the Utah Ecological Services Field Office, 2369 West Orton Circle, West Valley City, Utah 84119, telephone 801–975–3330. Persons who use a telecommunications device for the deaf (TDD) may call the Federal Information Relay Service (FIRS) at 800–877–8339.

FOR FURTHER INFORMATION CONTACT: Larry Crist, Field Supervisor, (telephone 801–975–3330; facsimile 801–975–3331). Direct all questions or request for additional information to: UTAH PRAIRIE DOG SPECIAL RULE QUESTIONS, U.S. Fish and Wildlife Service, Utah Ecological Services Field Office, 2369 West Orton Circle, Suite 50, West Valley City, UT 84119. Individuals who are hearing-impaired or speech-impaired may call the Federal Information Relay Service (FIRS) at 800–877–8339 for TTY assistance.

SUPPLEMENTARY INFORMATION:

Public Comments

We want any final rule resulting from this proposal to be as effective as possible. Therefore, we invite tribal and governmental agencies, the scientific community, industry, and other interested parties to submit comments regarding our recommendations regarding the six substantive changes to our proposed rule, and comments on our draft EA associated with our proposed revised special rule for the Utah prairie dog. Comments should be as specific as possible.

Before issuing a final rule to implement this proposed action, we will take into account all comments and any additional information we receive. Such communications may lead to a final rule that differs from our proposal. All comments, including commenters' names and addresses, if provided to us, will become part of the supporting record.

You may submit your comments and materials concerning our changes to the proposed rule, and/or our draft Environmental Assessment by one of the methods listed in the **ADDRESSES** section. Comments must be submitted to *http://www.regulations.gov* before 11:59 p.m. (Eastern Time) on the date specified in the **DATES** section.

We will post your entire comment—including your personal identifying information—on *http://www.regulations.gov.* If you provide personal identifying information in your comment, you may request at the top of your document that we withhold this information from public review. However, we cannot guarantee that we will be able to do so.

Comments and materials we receive, as well as supporting documentation we used in preparing this proposed rule, will be available for public inspection on *http://www.regulations.gov,* or by appointment, during normal business hours at the U.S. Fish and Wildlife Service, Utah Ecological Services Field Office (see **FOR FURTHER INFORMATION CONTACT**).

Background

The Endangered Species Act of 1973, as amended (Act or ESA) (16 U.S.C. 1531 *et seq.*), provides measures to prevent the loss of species and their habitats. Section 4 of the Act sets forth the procedures for adding species to the Lists of Endangered and Threatened Wildlife and Plants, and section 4(d) authorizes the Secretary of the Interior (Secretary) to extend to threatened species the prohibitions provided for endangered species under section 9. Our implementing regulations for threatened wildlife, found at title 50 of the Code of Federal Regulations (CFR) in § 17.31, incorporate the section 9 prohibitions for endangered wildlife, except when a special rule is promulgated. Under section 4(d) of the Act, the Secretary may specify the prohibitions and any exceptions to those prohibitions that are appropriate for a threatened species, provided that those prohibitions and exceptions are necessary and advisable to provide for the species' conservation. A special rule issued under section 4(d) of the Act for a threatened species includes provisions tailored specifically for the conservation needs of that species, and these provisions may be more or less restrictive than the general provisions at 50 CFR 17.31.

Since 1984, the Service has implemented a special rule for the Utah prairie dog. This special rule (also referred to as a ''4(d) rule'') is found in 50 CFR 17.40(g). We published a proposed rule to revise the current special rule for the Utah prairie dog on June 2, 2011 (76 FR 31906). It is our intent in this document to discuss only those topics directly relevant to (1) our substantive changes to our June 2, 2011, proposed rule (76 FR 31906) to revise the special rule for the Utah prairie dog, and (2) information related to our draft environmental assessment. For more information on previous Federal actions concerning the special rule for Utah prairie dogs and species information, refer to the June 2, 2011, proposed rule, which is available online at *http://www.regulations.gov* at Docket Number FWS–R6–ES–2011–0030, or by appointment during normal business hours, at the U.S. Fish and Wildlife Service, Utah Ecological Services Field Office (see **FOR FURTHER INFORMATION CONTACT**).

Previous Federal Actions

Our 1984 special regulations for the Utah prairie dog, as amended in 1991, did not apply the take prohibitions described in section 9 of the ESA to activities occurring on private lands across the range of the species, under a permit system developed by the Utah Division of Wildlife Resources (UDWR), as authorized by Utah Code R657–19–6 and R657–19–7. Our June 2, 2011 (76 FR 31906), proposed rule would revise the

1991 rule to provide limits to the allowable take and to expand the range of otherwise legal activities where applying the take prohibitions in section 9 of the Act is not necessary and advisable. Our June 2, 2011, proposal had a 60-day comment period, ending August 2, 2011. We received no requests for a public hearing; therefore, no public hearing was held.

Draft Environmental Assessment

We have prepared a draft EA analyzing the proposed revisions to our 4(d) regulations. The draft EA incorporates the substantive changes to our proposed rule, as described in the following section. We evaluated three alternatives in the draft EA:

1. Alternative 1 (No Action)—continuation of the current special rule as implemented by the UDWR permitting process under Utah State Code R657–19–6 and R657–19–7.

2. Alternative 2 (Preferred Action)—limiting where direct take can be permitted, limiting the amount of rangewide direct take allowed, providing site-specific limits on the amount of direct take, identifying timing of permitted direct take, identifying methods allowed to implement direct take, and adding incidental take authorization for standard agricultural practices.

3. Alternative 3—promulgating the blanket 4(d) rule that applies all Endangered Species Act section 9(a) take prohibitions to the Utah prairie dog. Under this alternative, lethal take would not be allowed unless permitted pursuant to section 10(a)(1)(A) of the Act.

We are seeking comment on the draft EA, which is available upon request or online at *http://www.regulations.gov* at Docket No. FWS–R6–ES–2011–0030 or at *http://www.fws.gov/mountain-prairie/species/mammals/UTprairiedog/index.htm.*

Addition to the Proposed Rule—Allowing Take Where Utah Prairie Dogs Cause Serious Human Safety Hazards or Disturb the Sanctity of Significant Human Cultural or Burial Sites

Public comments received on our June 2, 2011, proposed rule included a recommendation that we should amend the proposed 4(d) rule to allow take in situations where human safety is at risk and in cemeteries. We are now proposing to include properties where Utah prairie dogs create serious human safety hazards or disturb the sanctity of significant cultural or human burial sites as locations where take would not be prohibited.

Take would be allowed in these areas when Utah prairie dogs are determined, with the written approval of the Service to be presenting a serious human safety hazard (e.g., airport safety areas, recreational sports fields, nursing homes, schools), or disturbing the sanctity of a significant human cultural or human burial site sites (e.g., public cemetery, sacred tribal sites) if these lands are determined not necessary for the conservation of the species. No UDWR permit would be required in these instances. This change would only apply to areas where a credible, serious public safety hazard or harm to significant human cultural or human burial sites could be clearly demonstrated. Areas of serious human safety hazards would not include public rangelands or properties being developed for residential or commercial uses. In addition, we would not intend for this rule to be used to eliminate prairie dogs because of concerns regarding plague transmission to humans, unless this disease becomes a proven human safety issue in the future, and is directly linked to the presence of Utah prairie dogs in specific circumstances.

Lethal take in these situations would be used as a last resort, and only allowable after all practicable measures to resolve the conflict are implemented. All practicable measures means, with respect to these situations, the (1) construction of a prairie-dog proof fence, above and below grade to specifications approved by the Service, around the area in which there is concern, and (2) translocation of Utah prairie dogs out of the area in which there is a concern. Lethal take would be allowed only to remove prairie dogs that remain in these areas after the measures to fence and translocate are successfully carried out. Despite our best engineering efforts, prairie-dog proof fences may still be breached by prairie dogs. The local communities or private entities would be required to maintain the fence, fix any breaches, or modify the fences as necessary to limit access of prairie dogs in order for the lethal take authorization to be sustained long-term. These qualifying circumstances would be certified in writing by the Service following any necessary site visits and coordination with the requesting entity. As stated above, a UDWR permit would not be required to allow take under these conditions.

We would not limit the amount, timing, or methods of lethal take allowed on lands where Utah prairie dogs create serious human safety hazards or disturb the sanctity of significant human cultural or human burial sites, as long as the qualifying circumstances described above are met. These sites are relatively small areas, would be fenced, and prairie dogs would be removed by translocation prior to the permitting of lethal take. Thus, we expect that the numbers of Utah prairie dogs lethally removed would be small. In addition, these areas do not contribute to conservation of the species because they are generally within otherwise developed areas with substantial human activity and habitat fragmentation.

Substantive Changes to the Proposed Rule

Based on public and peer review comments received on our June 2, 2011, proposed rule, we are proposing to make substantive changes for our final rule. These changes are described below in response to the comments received, and tables comparing the provisions of the current special rule, the proposed revisions to that rule, and the Utah code follows this discussion.

Permitting Take

We received a comment from the State of Utah recommending that entities other than the UDWR be allowed to issue permits for control of Utah prairie dogs. The previous special rules (49 FR 22330, May 29, 1984; 56 FR 27438, June 14, 1991) allowed take of Utah prairie dogs when permitted by UDWR. Under these rules, UDWR biologists were required to count Utah prairie dogs, determine extent of damage, determine level of take, and issue permits to applicants who requested the ability to control prairie dogs on their lands. At the time the previous rules were published, UDWR biologists were likely the only persons with the expertise to perform these permitting tasks. However, we now have a larger partnership effort, in the form of the Utah Prairie Dog Recovery Implementation Program, in which members of other state, federal, tribal, local entities and the public are working together on various programs to facilitate the species' recovery. Because of this partnership, we can reasonably assume that other entities may be available to conduct many of the permitting responsibilities previously undertaken by the UDWR. Approved permitting entities would at a minimum be required to employ a sufficient number of professional wildlife biologists to conduct all permitting responsibilities; request and complete permitting training from the UDWR for staff assigned to permitting; complete the Service's annual Utah prairie dog survey training; maintain a complete

reporting and tracking system for take, including annual reports on the number and location of permits issued, spring population counts and boundaries of permitted colonies, number of animals allowed to be taken, number of animals actually taken, method of take, and method of disposal of all Utah prairie dogs taken. Thus, we are proposing that this special rule will allow, with the Service's written approval, other entities to perform the permitting and reporting tasks for control activities formerly only conducted by UDWR.

Limiting the Amount and Distribution of Direct Take That Can Be Permitted

In this section of the proposed rule, we propose to make changes to (1) limiting take by season and (2) limiting the amount of take—

(1) Limiting Take by Season—One commenter recommended that we revise our timing of permitted take from June 1 to July 1 on the Awapa and Paunsaugunt recovery units to protect pups in these areas, which emerge later than those within the West Desert Recovery Unit. We reviewed the available literature and discussed the permit dates with the Utah Prairie Dog Recovery Team relative to differences in pup emergence from dens in the lower elevations of the West Desert Recovery Unit as compared to the Awapa and Paunsaugunt Recovery Units. Generally, pups emerge from their dens earlier in the West Desert Recovery Unit as compared to the Awapa and Paunsaugunt Recovery Units. We propose to allow direct lethal take to start on June 15 each year throughout the range of the species, including the West Desert Recovery Area. Despite the earlier emergence of pups in the West Desert, we find it prudent for consistency and simplicity to select a range of dates best supported by the available scientific information to apply throughout the range of the species. This is a moderate change from the dates of June 1 through December 31 proposed in our June 2, 2011 proposed rule and authorized by the 1991 special rule.

Our proposed change is based on our most current knowledge of the species biology: pups emerge from their burrows by mid to late June at which time they are foraging independently (Hoogland 2003, p. 236). Therefore, the loss of female adult prairie dogs after the pups emerge from their dens would not negatively affect the survivability of the remaining young. In addition, prairie dog populations with seasonal shooting closures of March 14 to June 15 show positive population growths and low to negligible risk of extirpation (Colorado Division of Wildlife 2007, p. 135). These seasonal shooting closure dates directly correspond to our proposed timing of June 15 through December 31 for allowing direct lethal take. Thus, we can conclude that restricting use of the 4(d) rule between the dates of January 1 through June 14 would result in positive population growths with low to negligible risk of extinction. This conclusion is supported by our observations that we have never verified the loss of a Utah prairie dog colony because of take permitted by UDWR, and prairie dog counts have remained stable to increasing on sites where permits were repeatedly requested over the last 25 years (Day 2010). In this timeframe, UDWR provided permits to landowners beginning June 1. Thus, our proposed revision to June 15 is more conservative than past practice, and is based on the best current available science.

(2) Limiting the Amount of Take—We received comments from a couple of peer reviewers questioning whether our proposed rule was supported by the available modeling of population responses to shooting. Based on the comments, we reevaluated the available literature.

According to the literature, a harvest rate based on a percentage of the known population (*i.e.,* fluctuating harvest rate) can ensure the maintenance of a sustainable population, with no risk of extinction (Reeve and Vosburgh 2006, pp. 123–125). Our June 2, 2011, proposed rule limits the allowable permitted direct take on agricultural lands and properties neighboring conservation lands to no more than 10 percent of the estimated annual rangewide population (adults and juveniles)—agricultural lands would be limited to take not exceeding 7 percent of the estimated annual rangewide population and the remaining allowable take is reserved for properties neighboring conservation lands. We conclude that our proposed limit is a fluctuating harvest rate, is conservative, based on available modeling, and will continue to result in stable to increasing Utah prairie dog population trends. Therefore, we do not propose to change this portion of our proposed rule based on the available literature.

Our proposed rule of June 2, 2011, established that UDWR could only permit direct lethal take under the revised 4(d) rule on prairie dog colonies that had a minimum spring count of five animals (total population estimate = 36 animals; see our June 2, 2011, proposed rule for population calculations). After reviewing public and peer review comments, we are now proposing that a minimum spring count of seven animals (total population estimate = 50 animals) is established to ensure that permits are authorized only where resident prairie dogs have become established on agricultural lands and to ensure that shooting does not result in the loss of a colony. If the maximum amount of take (one-half of the colony's productivity = 18 prairie dogs) occurs on this size colony, it would reduce the total colony size to 32 animals prior to the following breeding season. Colonies of at least 25 prairie dogs are likely to show population growth with very little risk of extinction. Populations with 50 or greater animals show no risk of extinction and strong population growth (Colorado Division of Wildlife 2007, p. 128). Therefore, we would expect prairie dog colonies of 32 animals to continue to exist long-term with annual, regulated shooting pressure. This conclusion is supported by our observations that we have never verified the loss of a Utah prairie dog colony because of take permitted by UDWR and prairie dog counts have remained stable to increasing on sites where permits were repeatedly requested since 1985 (Day 2010).

In addition, we are proposing to include a provision that UDWR or other entities (as described above) would spatially distribute the 7 percent allowed take on agricultural lands across the three Recovery Units, based on the distribution of the total annual population estimate within each Recovery Unit. This spatial distribution will help ensure that the take is not clustered in one area, and is instead more uniform based on comparative annual population numbers.

Several commenters, including peer reviewers, were confused because we used two numeric limits to take—an upper annual limit of 6,000 Utah prairie dogs, and a limit based on calculating 10 percent of the total estimated annual rangewide Utah prairie dog population.

We propose to limit take using only the 10 percent limit. This is a fluctuating harvest rate that is supported by the available literature and based on total annual Utah prairie dog population numbers. Therefore, we do not believe there is a need to place an additional limit at 6,000 animals annually.

We conclude that these proposed changes are consistent with the available population models and ensure that our proposed rule is based on the best available science. These proposed changes are more restrictive than past practice under the 1984 special rule, as amended in 1991. In the last 25 years, Utah prairie dog population trends have remained stable to increasing. Thus, we

conclude that these proposed changes will continue to support Utah prairie dog conservation efforts and are based on the best available science.

Limiting Methods Allowed To Implement Direct Take

One peer reviewer recommended that we prohibit the use of gas cartridges, anticoagulants, and explosive devices as methods of permissible lethal control. The revised 4(d) rule would specifically prohibit the use of gas cartridges, anticoagulants, and explosive devices as methods of permissible lethal control on agricultural lands and properties adjacent to conservation lands. These types of methods could be applied across large areas and kill large numbers of prairie dogs. These techniques do not allow control agents to target a specific number of prairie dogs or track actual take. However, the use of any methodology will be allowed in areas where Utah prairie dogs create serious human safety hazards or disturb the sanctity of significant cultural or human burial sites (see *Addition to the Proposed Rule—Allowing Take at Significant Human Cultural or Burial Sites,* above).

Summary

Table 1 describes the Current Special Rule and Practice of 1991, the revisions we proposed in our June 2, 2011 rule (76 FR 311906), and the additions and changes included in this revised proposed rule. Table 2 provides a summary of our proposed amendments to the existing special rule based on both our June 2, 2011, proposed rule and the additions and changes described in this revised proposed rule.

TABLE 1—COMPARISON OF THE CURRENT RULE AND PRACTICE (1991); THE PROPOSED RULE OF JUNE 2, 2011 AND THIS REVISED PROPOSED RULE

	Current rule and practice (1991)	Proposed rule (2011)	Revised proposed rule (2012)
Who Can Allow Take.	Utah Division of Wildlife Resources (UDWR).	UDWR	UDWR, or other entities with the Service's written approval. Add that no permit is needed where prairie dogs create serious human safety hazards or disturb the sanctity of significant human cultural or burial sites. Written approval from the Service is sufficient in these circumstances.
Where Direct Take Is Allowed.	Existing Special Rule—private lands Utah Code— agricultural lands	Agricultural lands and properties adjacent to conservation lands.	Retain agricultural lands and properties adjacent to conservation lands. Add properties where prairie dogs create serious human safety hazards or disturb the sanctity of significant human cultural or burial sites.
Amount of Rangewide Direct Take Allowed.	6,000 animals annually	Maintains the current rule's upper annual permitted take limit of 6,000 animals. Adds a condition that the upper permitted take limit may not exceed 10 percent of the estimated rangewide population annually.	The upper annual permitted take limit of 6,000 animals annually is removed. The upper permitted take limit may not exceed 10 percent of the estimated rangewide population annually; and, on agricultural lands, may not exceed 7 percent of the estimated annual rangewide population annually. Take in areas where prairie dogs create serious human safety hazards or disturb the sanctity of significant human cultural or burial sites does not contribute to the take allowance.
Site Specific Limits on Amount of Direct Take.	No restrictions specified	On agricultural lands, within-colony take is limited to one-half of a colony's estimated annual production (approximately 36 percent of estimated total population). On properties neighboring conservation lands, take is restricted to animals in excess of the baseline population.	Retain limits of Proposed Rule for agricultural lands and properties neighboring conservation lands. Add that there are no limits on the amount of direct take where prairie dogs create serious human safety hazards or disturb the sanctity of significant human cultural or burial sites.
Timing of Allowed Direct Take.	June 1 to December 31	June 15 to December 31	Retain the June 15 to December 31 seasonal limits on agricultural lands and properties neighboring conservation lands. Add that there is no timing restriction where prairie dogs create serious human safety hazards or disturb the sanctity of significant human cultural or burial sites, except that translocations will be conducted before lethal measures of control are allowed.

TABLE 1—COMPARISON OF THE CURRENT RULE AND PRACTICE (1991); THE PROPOSED RULE OF JUNE 2, 2011 AND THIS REVISED PROPOSED RULE—Continued

	Current rule and practice (1991)	Proposed rule (2011)	Revised proposed rule (2012)
Methods Allowed to Implement Direct Take.	Existing Special Rule—no restrictions specified. Utah Code—limited to firearms and trapping, and chemical toxicants specifically prohibited	Limited to translocations, trapping intended to lethally remove prairie dogs, and shooting. Actions intended to drown or poison prairie dogs, and the use of gas cartridges, anticoagulants, and explosive devices are prohibited.	Retain restrictions on agricultural lands and properties neighboring conservation lands. Add that no restrictions on methods to implement direct take are applied to areas where prairie dogs create serious human safety hazards or disturb the sanctity of significant human cultural or burial sites, except that translocations will be conducted before lethal measures of control are allowed.
Service Ability to Further Restrict Direct Take.	The Service may immediately prohibit or restrict such taking as appropriate for the conservation of the species.	Unchanged	Unchanged.
Incidental Take	Not authorized	Authorized when take is incidental to otherwise legal activities associated with standard agricultural practices.	Unchanged.

TABLE 2—SUMMARY OF OUR PROPOSED AMENDMENTS

	Proposed amendments
Who Can Allow Take	UDWR or, with the Service's written approval, other entities can perform the permitting and reporting tasks for control activities on agricultural lands or properties adjacent to conservation lands. No permits are required for take in areas where prairie dogs create serious human safety hazards or disturb the sanctity of significant human cultural or burial sites.
Where Direct Take Is Allowed	Direct take is limited to: Agricultural land being physically or economically impacted by Utah prairie dogs when the spring count on the agricultural lands is seven or more individuals; private properties within 0.8 km (0.5 mi) of Utah prairie dog conservation land; and areas where human safety hazards or the sanctity of significant cultural or human burial sites are a serious concern, but only after all practicable measures to resolve the conflict are implemented.
Amount of Rangewide Direct Take Allowed.	The upper permitted take limit may not exceed 10 percent of the estimated rangewide population annually for agricultural lands and properties adjacent to conservation lands; and, on agricultural lands, may not exceed 7 percent of the estimated annual rangewide population annually. There is no limit for the amount of take in areas where prairie dogs create serious human safety hazards or disturb the sanctity of significant human cultural or burial sites, and take in these circumstances does not contribute to the upper permitted take limits described above.
Site-Specific Limits on Amount of Direct Take.	On agricultural lands, within-colony take is limited to one-half of a colony's estimated annual production (approximately 36 percent of estimated total population). On properties neighboring conservation lands, take is restricted to animals in excess of the baseline population. The baseline population is the highest estimated total (summer) population size on that property during the 5 years prior to establishment of the conservation property. There are no site-specific direct take limits in areas where prairie dogs create serious human safety hazards or disturb the sanctity of significant human cultural or burial sites.
Timing of Allowed Direct Take	The timing of permitted direct take on agricultural lands and properties adjacent to conservation lands is limited to June 15 through December 31. There is no timing restriction where prairie dogs create serious human safety hazards or disturb the sanctity of significant human cultural or burial sites, except that translocations must be completed prior to conducting any lethal take.
Methods Allowed to Implement Direct Take.	On agricultural lands and properties adjacent to conservation lands, direct take is limited to activities associated with translocation efforts by trained and permitted individuals complying with current Service-approved guidance, trapping intended to lethally remove prairie dogs, and shooting. Actions intended to drown or poison prairie dogs, and the use of gas cartridges, anticoagulants, or explosive devices is prohibited in these areas. There are no restrictions on methods to implement take in areas where prairie dogs create serious human safety hazards or disturb the sanctity of significant human cultural or burial sites, except that translocations will be conducted before lethal measures of control are allowed.
Service Ability to Further Restrict Direct Take.	Unchanged.
Incidental Take	Utah prairie dogs may be taken when take is incidental to otherwise legal activities associated with standard agricultural practices (see rule for specifics).

Required Determinations

Regulatory Planning and Review

The Office of Management and Budget (OMB) has determined that this rule is not significant and has not reviewed this proposed rule under Executive Order 12866 (E.O. 12866). OMB bases its determination upon the following four criteria:

a. Whether the rule will have an annual effect of $100 million or more on the economy or adversely affect an economic sector, productivity, jobs, the environment, or other units of the government;

b. Whether the rule will create inconsistencies with other Federal agencies' actions;

c. Whether the rule will materially affect entitlements, grants, user fees, loan programs, or the rights and obligations of their recipients; or

d. Whether the rule raises novel legal or policy issues.

Regulatory Flexibility Act

Under the Regulatory Flexibility Act (RFA; 5 U.S.C. 601 et seq., as amended by the Small Business Regulatory Enforcement Fairness Act (SBREFA) of 1996), whenever an agency publishes a notice of rulemaking for any proposed or final rule, it must prepare and make available for public comment a regulatory flexibility analysis that describes the effects of the rule on small entities (small businesses, small organizations, and small government jurisdictions). However, no regulatory flexibility analysis is required if the head of the agency certifies the rule will not have a significant economic impact on a substantial number of small entities. The SBREFA amended RFA to require Federal agencies to provide a statement of the factual basis for certifying that the rule will not have a significant economic impact on a substantial number of small entities. Thus, for a regulatory flexibility analysis to be required, impacts must exceed a threshold for ''significant impact'' and a threshold for a ''substantial number of small entities.'' See 5 U.S.C. 605(b). Based on the information that is available to us at this time, we certify that this regulation will not have a significant economic impact on a substantial number of small entities. The following discussion explains our rationale.

Utah prairie dogs have been listed under the ESA since the early 1970s (38 FR 14678, June 4, 1973; 39 FR 1158, January 4, 1974). A 4(d) special rule has been in place since 1984 that provides protections deemed necessary and advisable to provide for the conservation of the species (49 FR 22330, May 29, 1984; 56 FR 27438, June 14, 1991). These special regulations allow limited take of Utah prairie dogs on private land from June 1 through December 31, as permitted by UDWR (50 CFR 17.40(g)). While this proposed rule places limits on the current special rule, the proposed changes are largely consistent with current UDWR permitting practices. Because this proposal largely institutionalizes current practices, there should be little or no increased costs associated with this proposed regulation compared to the past similar special rules that were in effect for the last several decades.

In summary, we have considered whether the proposed rule would result in a significant economic impact on a substantial number of small entities. For the above reasons and based on currently available information, we certify that these amendments if promulgated would not have a significant economic impact on a substantial number of small entities. Therefore, an initial regulatory flexibility analysis is not required.

Unfunded Mandates Reform Act

In accordance with the Unfunded Mandates Reform Act (2 U.S.C. 1501 et seq.), we make the following findings:

a. If adopted, this proposal will not produce a Federal mandate. In general, a Federal mandate is a provision in legislation, statute, or regulation that would impose an enforceable duty upon State, local, or Tribal governments, or the private sector, and includes both ''Federal intergovernmental mandates'' and ''Federal private sector mandates.'' These terms are defined in 2 U.S.C. 658(5)–(7). ''Federal intergovernmental mandate'' includes a regulation that ''would impose an enforceable duty upon State, local, or [T]ribal governments,'' with two exceptions. It excludes ''a condition of Federal assistance.'' It also excludes ''a duty arising from participation in a voluntary Federal program,'' unless the regulation ''relates to a then-existing Federal program under which $500,000,000 or more is provided annually to State, local, and tribal governments under entitlement authority,'' if the provision would ''increase the stringency of conditions of assistance'' or ''place caps upon, or otherwise decrease, the Federal Government's responsibility to provide funding,'' and the State, local, or Tribal governments ''lack authority'' to adjust accordingly. Federal private sector mandate'' includes a regulation that ''would impose an enforceable duty upon the private sector, except (i) a condition of Federal assistance or (ii) a duty arising from participation in a voluntary Federal program.''

This proposed rule would not impose a legally binding duty on non-Federal Government entities or private parties. Instead, this proposed amendment to the existing special rule proposes to establish take authorizations and limitations deemed necessary and advisable to provide for the conservation of the Utah prairie dog. Application of the provisions within this proposed rule, as limited by existing regulations and this proposed amendment, is optional.

b. We do not believe that this rule would significantly or uniquely affect small governments. The State of Utah originally requested measures such as this proposed regulation to assist with reducing conflicts between Utah prairie dogs and local landowners on agricultural lands (49 FR 22331, May 29, 1984). In addition, the UDWR actively assists with implementation of the current special rule, and would do the same under this proposed regulation, through a permitting system. Thus, no intrusion on State policy or administration is expected; roles or responsibilities of Federal or State governments will not change; and fiscal capacity will not be substantially directly affected. The special rule operates to maintain the existing relationship between the States and the Federal Government. Furthermore, the proposed limitations on where permitted take can occur, the amount of take that can be permitted, and methods of take that can be permitted, are largely consistent with current UDWR practices. Therefore, the rule would not have a significant or unique effect on State, local, or Tribal governments or the private sector. A statement containing the information required by the Unfunded Mandates Reform Act is not required.

Takings

This action is exempt from the requirements of E.O. 12630 (Government Actions and Interference with Constitutionally Protected Private Property Rights). Specifically, according to section VI (D) (3) of the Attorney General's Guidelines for the Evaluation of Risk and Avoidance of Unanticipated Takings, regulations allowing the take of wildlife issued under the ESA are categorically exempt. This proposed amendment pertains to regulation of take (defined by the ESA as ''to harass, harm, pursue, hunt, shoot, wound, kill, trap, capture, or collect, or to attempt to engage in any such conduct'') deemed necessary and advisable to provide for the conservation of the Utah prairie dog. Thus, this exemption applies to this action.

Regardless, we do not believe this action would pose significant takings implications. This rule will substantially advance a legitimate government interest (conservation and recovery of listed species). However, it will not deny property owners economically viable use of their land, and will not present a bar to all reasonable and expected beneficial use of private property. We believe the existing special regulation and the proposed amendments provide

substantial flexibility to our partners while still providing for the conservation of the Utah prairie dog. Should additional take provisions be required, an applicant has the option to develop a Habitat Conservation Plan and request an incidental take permit (see Section 10(a)(1)(B) of the ESA). This approach would allow permit holders to proceed with an activity that is legal in all other respects, but that results in the ''incidental'' take of a listed species.

We have concluded that this action would not result in any takings of private property. Should any takings implications associated with the proposed amendment be realized, they will likely be insignificant.

Federalism

In accordance with E.O. 13132 (Federalism), this proposed rule would not have significant Federalism effects. A Federalism assessment is not required. In keeping with Department of the Interior and Department of Commerce policy, we requested information from, and coordinated development of this proposed amendment with, appropriate State resource agencies in Utah. The State of Utah originally requested measures such as this proposed regulation to assist with reducing conflicts between Utah prairie dogs and local landowners on agricultural lands (49 FR 22331, May 29, 1984). In addition, the UDWR actively assists with implementation of the current special rule, and would do the same under this proposed regulation, through a permitting system. Thus, no intrusion on State policy or administration is expected; roles or responsibilities of Federal or State governments will not change, and fiscal capacity will not be substantially directly affected. The special rule operates and, if amended, would continue to operate to maintain the existing relationship between the State and the Federal government. Therefore, this rule does not have significant Federalism effects or implications to warrant the preparation of a Federalism Assessment pursuant to the provisions of Executive Order 13132.

Civil Justice Reform

In accordance with E.O. 12988 (Civil Justice Reform), the Office of the Solicitor has determined that the rule does not unduly burden the judicial system and that it meets the requirements of sections 3(a) and 3(b)(2) of the Order. We have proposed this amendment to the existing special rule for the Utah prairie dog in accordance with the provisions of the ESA. Under section 4(d) of the ESA, the Secretary may extend to a threatened species those protections provided to an endangered species as deemed necessary and advisable to provide for the conservation of the species. The amendments proposed here satisfy this standard.

Paperwork Reduction Act

This rule does not contain any new collections of information that require approval by OMB under the Paperwork Reduction Act of 1995 (44 U.S.C. 3501 et seq.). This rule will not impose recordkeeping or reporting requirements on State or local governments, individuals, businesses, or organizations. An agency may not conduct or sponsor, and a person is not required to respond to, a collection of information unless it displays a currently valid OMB control number.

National Environmental Policy Act

In 1983, upon recommendation of the Council on Environmental Quality, the Service determined that National Environmental Policy Act (NEPA) documents need not be prepared in connection with regulations adopted pursuant to section 4(a) of the ESA. The Service subsequently expanded this determination to section 4(d) rules. A section 4(d) rule provides the appropriate and necessary prohibitions and authorizations for a species that has been determined to be threatened under section 4(a) of the ESA. It is our view that NEPA procedures unnecessarily overlay NEPA's own matrix upon the ESA section 4 decisionmaking process. For example, the opportunity for public comment—one of the goals of NEPA—is already provided through section 4 rulemaking procedures. This determination was upheld in *Center for Biological Diversity* v. *U.S. Fish and Wildlife Service,* No. 04–04324 (N.D. Cal. 2005).

However, out of an abundance of caution, we developed a draft Environmental Assessment that is available for public inspection and comment. All appropriate NEPA documents will be finalized before this rule is finalized.

Clarity of This Proposed Rule

We are required by Executive Orders 12866 and 12988 and by the Presidential Memorandum of June 1, 1998, to write all rules in plain language. This means that each rule we publish must:

a. Be logically organized;

b. Use the active voice to address readers directly;

c. Use clear language rather than jargon;

d. Be divided into short sections and sentences; and

e. Use lists and tables wherever possible.

If you feel that we have not met these requirements, send us comments by one of the methods listed in the **ADDRESSES** section. To better help us revise the rule, your comments should be as specific as possible. For example, you should tell us the numbers of the sections or paragraphs that are unclearly written, which sections or sentences are too long, and the sections where you feel lists or tables would be useful.

Government-to-Government Relationship With Tribes

In accordance with the President's memorandum of April 29, 1994, Government-to-Government Relations with Native American Tribal Governments (59 FR 22951), E.O. 13175, and the Department of the Interior's manual at 512 DM 2, we readily acknowledge our responsibility to communicate meaningfully with recognized Federal Tribes on a government-to-government basis. In accordance with Secretarial Order 3206 of June 5, 1997 (American Indian Tribal Rights, Federal-Tribal Trust Responsibilities, and the Endangered Species Act), we readily acknowledge our responsibilities to work directly with Tribes in developing programs for healthy ecosystems, to acknowledge that tribal lands are not subject to the same controls as Federal public lands, to remain sensitive to Indian culture, and to make information available to Tribes. Therefore, we intend to coordinate with affected Tribes within the range of the Utah prairie dog. We will fully consider all of the comments on the proposed special regulations that are submitted by Tribes and Tribal members during the public comment period, and we will attempt to address those concerns, new data, and new information where appropriate.

Energy Supply, Distribution, or Use

E.O. 13211, Actions Concerning Regulations That Significantly Affect Energy Supply, Distribution, or Use, requires agencies to prepare Statements of Energy Effects when undertaking certain actions. We do not expect this action to significantly affect energy supplies, distribution, or use. Therefore, this action is not a significant energy action, and no Statement of Energy Effects is required.

References Cited

A complete list of all references cited in this rulemaking is available upon request from our Utah Ecological Services Field Office (see **FOR FURTHER INFORMATION CONTACT** section).

List of Subjects in 50 CFR Part 17

Endangered and threatened species, Exports, Imports, Reporting and recordkeeping requirements, Transportation.

Proposed Regulation Promulgation

Accordingly, we propose to further amend part 17, subchapter B of chapter I, title 50 of the Code of Federal Regulations, as proposed to be amended at 76 FR 31906, June 2, 2011, as follows:

PART 17—[AMENDED]

1. The authority citation for part 17 continues to read as follows:

Authority: 16 U.S.C. 1361–1407; 16 U.S.C. 1531–1544; 16 U.S.C. 4201–4245; Pub. L. 99–625, 100 Stat. 3500; unless otherwise noted.

2. Amend § 17.40 by revising paragraphs (g)(1), (g)(2), (g)(3) introductory text, (g)(3)(i)(A), (g)(3)(ii)(A), (g)(3)(iii), (g)(4), and (g)(5) and adding paragraphs (g)(3)(iv) and (g)(6), to read as follows:

§ 17.40 Special rules—mammals.

* * * * *

(g) * * *

(1) Except as noted in paragraphs (g)(2) through (6) of this section, all prohibitions of § 17.31(a) and (b) and exemptions of § 17.32 apply to the Utah prairie dog.

(2) A Utah prairie dog may be directly or intentionally taken as described in paragraphs (g)(3) and ((4) of this section on agricultural lands, properties adjacent to conservation lands, and areas where prairie dogs create serious human safety hazards or disturb the sanctity of significant human cultural or human burial sites.

(3) *Agricultural lands and properties adjacent to conservation lands.* When permitted by the Utah Division of Wildlife Resources, or other parties as authorized in writing by the Service, direct or intentional take is allowed on agricultural land and private property near conservation land. Records on permitted take will be maintained by the State and made available to the Service upon request.

(i) * * *

(A) Take may be permitted only on agricultural land being physically or economically affected by Utah prairie dogs, only when the spring count on the agricultural lands is seven or more individuals, and only during the period of June 15 to December 31.

* * * * *

(ii) * * *

(A) Take may be permitted on private properties near (within 0.8 km (0.5 mi)) of Utah prairie dog conservation land during the period of June 15 to December 31.

* * * * *

(iii) *Amount of permitted take on agricultural lands and private property near conservation land.* (A) The Utah Division of Wildlife Resources, or other parties as authorized in writing by the Service, will ensure that permitted take on agricultural lands and properties within 0.8 km (0.5 mi) of conservation lands does not exceed 10 percent of the estimated rangewide population annually.

(B) On agricultural lands, the Utah Division of Wildlife Resources, or other parties as authorized in writing by the Service, will limit permitted take to 7 percent of the estimated annual rangewide population and will limit within-colony take to one-half of a colony's estimated annual production. The Utah Division of Wildlife Resources, or other parties as authorized in writing by the Service, will spatially distribute the 7 percent allowed take on agricultural lands across the three Recovery Units, based on the distribution of the total annual population estimate within each Recovery Unit.

(C) In setting take limits on properties near conservation lands, the Utah Division of Wildlife Resources, or other parties as authorized in writing by the Service, will consider the amount of take that occurs on agricultural lands. The State will restrict the remaining permitted take (the amount that would bring the total take up to 10 percent of the estimated annual rangewide population) on properties neighboring conservation lands to animals in excess of the baseline population. The baseline population is determined in accordance with paragraph (g)(3)(iii)(D) of this section.

(D) Take on properties within 0.8 km (0.5 mi) of conservation lands is restricted to prairie dogs in excess of the baseline population. The baseline population is the highest estimated total (summer) population size on that property during the 5 years prior to the establishment of the conservation property. The baseline population will be established by the Utah Division of Wildlife Resources, or other parties as authorized in writing by the Service.

(E) Translocated Utah prairie dogs will count toward the take limits in paragraphs (g)(3)(iii)(A) through (D) of this section.

(iv) *Methods of allowed direct take on agricultural lands and private properties near conservation land.* Methods for controlling Utah prairie dogs on agricultural lands and properties bordering conservation lands are limited to activities associated with translocation efforts by trained and permitted individuals complying with current Service-approved guidance, trapping intended for lethal removal, and shooting. Actions intended to drown or poison Utah prairie dogs and the use of gas cartridges, anticoagulants, and explosive devices are prohibited.

(4) *Human safety hazards and significant human cultural or burial sites.* Direct or intentional take is allowed where Utah prairie dogs create serious human safety hazards or disturb the sanctity of significant human cultural or human burial sites, but only after all practicable measures to resolve the conflict are implemented, and only as approved in writing by the Service. A Utah Division of Wildlife Resources permit is not required to allow take under these conditions.

(i) All practicable measures means, with respect to these situations:

(A) Construction of prairie-dog-proof fence, above and below grade to specifications approved by the Service, around the area in which there is concern.

(B) Translocation of Utah prairie dogs out of the area in which there is a concern. Lethal take is allowed only to remove prairie dogs that remain in these areas after the measures to fence and translocate are successfully carried out.

(C) Continued maintenance or modification of the fence as needed to preclude Utah prairie dogs from entering the fenced sites.

(ii) There are no restrictions on the amount, timing, or methods of lethal take allowed on lands where Utah prairie dogs create serious human safety hazards or disturb the sanctity of significant human cultural or human burial sites, as long as all qualifications in paragraphs (g)(4)(i)(A) through (C) of this section are met.

(iii) The amount of take in areas where Utah prairie dogs create serious human safety hazards or disturb the sanctity of significant human cultural or human burial sites does not contribute to the upper permitted take limits described above for agricultural lands and private properties near conservation lands.

(5) *Incidental take.* Utah prairie dogs may be taken when take is incidental to otherwise-legal activities associated with standard agricultural practices on

legitimately operating agricultural lands. Acceptable practices include plowing to depths that do not exceed 46 cm (18 in.), discing, harrowing, irrigating crops, mowing, harvesting, and bailing, as long as these activities are not intended to eradicate Utah prairie dogs. There is no numeric limit established for incidental take associated with standard agricultural practices. Incidental take is in addition to, and does not contribute to the take limits described in paragraphs (g)(2) through (4) of this section. A Utah Division of Wildlife Resources permit is not required for incidental take associated with agricultural practices.

(6) If the Service receives evidence that take pursuant to paragraphs (g)(2) through (5) of this section is having an effect that is inconsistent with the conservation of the Utah prairie dog, the Service may immediately prohibit or restrict such take as appropriate for the conservation of the species.

* * * * *

Dated: April 16, 2012.

Rachel Jacobson,

Acting Assistant Secretary for Fish and Wildlife and Parks.

[FR Doc. 2012–9884 Filed 4–25–12; 8:45 am]

BILLING CODE 4310–55–P

Notices

Federal Register

Vol. 77, No. 81

Thursday, April 26, 2012

This section of the FEDERAL REGISTER contains documents other than rules or proposed rules that are applicable to the public. Notices of hearings and investigations, committee meetings, agency decisions and rulings, delegations of authority, filing of petitions and applications and agency statements of organization and functions are examples of documents appearing in this section.

DEPARTMENT OF AGRICULTURE

Office of the Secretary

[Docket No. 2011–0001]

Privacy Act of 1974; System of Records

AGENCY: National Institute of Food and Agriculture, USDA.

ACTION: Notice of Revision of Privacy Act Systems of Records.

SUMMARY: Notice is hereby given that the United States Department of Agriculture (USDA) is revising two Privacy Act (PA) systems of records and deleting two PA systems of records maintained by the National Institute of Food and Agriculture (NIFA), formerly the Cooperative State Research, Education, and Extension Service (CSREES).

DATES: Submit comments on or before May 29, 2012. These systems will be effective May 29, 2012.

ADDRESSES: You may submit comments, identified by Docket No. 2011–0001 by one of the following methods: Federal eRulemaking Portal: *http://www.regulations.gov*. Follow the instructions for submitting comments. Email: *stasia.hutchison@ars.usda.gov*. Include the text ''NIFA Privacy Act System of Records'' in the subject line of the message. Fax: (202) 504–1647. Mail: Stasia Hutchison, Freedom of Information Act and Privacy Act Officer, Information Staff, Agricultural Research Service, Research, Education, and Economics, Department of Agriculture, Mail Stop 5128, 5601 Sunnyside Avenue, Beltsville, MD 20705–5128. Hand Delivery/Courier: Stasia Hutchison, Freedom of Information Act and Privacy Act Officer, Information Staff, Agricultural Research Service, Research, Education, and Economics, Department of Agriculture, George Washington Carver Center, Building 1, Room 2248, 5601 Sunnyside Avenue, Beltsville, MD 20705–5128. Instructions: All submissions received must include the agency name and docket number for this rulemaking. All comments received will be posted without change to *http://www.regulations.gov,* including any personal information provided. Docket: For access to the docket to read background documents or comments received, go to *http://www.regulations.gov*.

FOR FURTHER INFORMATION CONTACT: Stasia Hutchison, Freedom of Information Act and Privacy Act Officer, Information Staff, Agricultural Research Service, Research, Education, and Economics, Department of Agriculture, 5601 Sunnyside Avenue, STOP 5128, Beltsville, MD 20705–5128; Telephone (301) 504–1655; Facsimile (301) 504–1647; Email: *stasia.hutchison@ars.usda.gov*.

SUPPLEMENTARY INFORMATION:

I. Background

1. Two systems of records are being revised.

A. State Cooperative Extension Service Employees, USDA/NIFA–1. The State Cooperative Extension Service Employees System is utilized to prepare the annual salary analysis report that is used as a management tool for salary analysis purposes as well as historical purposes. Cooperative Extension Service (CES) employee records are permanently maintained in the CES Personnel Information System database of NIFA. This database is updated annually from data provided by 1862 and 1890 land-grant universities. This database is maintained by the Agricultural Research Service, Human Resources Division.

The purpose of this revision to the system of records is to change the system designation from USDA/CSREES–3 to USDA/NIFA–2; change references to the agency name to NIFA to acknowledge the reorganization; identify changes in the way records are retrieved and safeguarded; update the retention and disposal section to include Records Management Policies and Procedures; update the notification procedures, records access procedures, and contesting records procedures to direct individuals to the Freedom of Information Act Officer; modify the routine uses by adding four relating to security breaches, records management inspections, oversight operations, and access by contractors/grantees/experts/consultants/and others performing work or working on behalf of the Department; and add the following sections: Security classification, purpose, and disclosure to consumer reporting agencies.

Use of this system, as established, should not result in undue infringement of any individual's right to privacy.

The revised system of records will not be exempt from any provisions of the Privacy Act.

Proper safeguards are taken to prevent unauthorized access to the records. Authorization must be obtained from the Director, NIFA, or the Chief, MSB–HRD, ARS, before information is released. All records are accessed by unique passwords and logon procedures. Only those employees with a need-to-know in order to perform their duties are able to access the information.

Consistent with USDA's information-sharing mission, information stored in the State Cooperative Extension Service Employees system of records may be shared with other USDA components, as well as appropriate Federal, State, local, Tribal, foreign, or international government agencies. This sharing will take place only after USDA determines that the receiving component or agency has a need to know the information to carry out national security, law enforcement, immigration, intelligence, or other functions consistent with the routine uses set forth in this system of records notice.

B. National Institute of Food and Agriculture Grants Systems, USDA/NIFA–3. NIFA receives research, education, and extension grant applications each year, of which approximately a quarter are awarded. The majority of these applications are subjected to a rigorous peer-review involving technical experts (scientists, educators, farmers, engineers, and extension specialists) located worldwide. Given the highly technical nature of many of these applications, the quality of the peer-review greatly depends on the appropriate matching of the subject matter of the application with the technical expertise of the potential reviewer. NIFA maintains a database of potential reviewers. Information in the database is used to match applications with the most appropriate (potential) reviewers.

Therefore, the accuracy of the database content is integral to the success of the NIFA peer review process. In addition to the reviewer information, applicant information is maintained for the proper oversight of the Federal funds and is also used to respond to inquiries from Congress, other governmental agencies, and the grantee community. The authorities for maintaining this system of records are National Agricultural Research, Extension, and Teaching Policy Act of 1977 (NARETPA), 7 U.S.C. 3318.

The purpose of this revision to the system of records is to change the system designation from USDA/CSREES–4 to USDA/NIFA–3; change the agency name to NIFA to acknowledge the reorganization; update the safeguards to include agency rules and policies; update the retention and disposal section to include Records Management Policies and Procedures; update the notification procedures, records access procedures, and contesting records procedures to direct individuals to the Freedom of Information Act Officer; modify the routine uses by adding four relating to security breaches, records management inspections, oversight operations, and the Federal Funding Accountability and Transparency Act of 2006 reflecting loans, grants, or other payments to members of the public; and add the following sections: Security classification, purpose, and disclosure to consumer reporting agencies.

Use of this system, as established, should not result in undue infringement of any individual's right to privacy.

The revised system of records will not be exempt from any provisions of the Privacy Act.

Proper safeguards are taken to prevent unauthorized access to the records. All records containing personal information are maintained in secured file cabinets or are accessed by unique passwords and logon procedures. Only those employees with a need-to-know in order to perform their duties will be able to access the information.

Consistent with USDA's information sharing mission, information stored in the National Institute of Food and Agriculture Grants Systems system of records may be shared with other USDA components, as well as appropriate Federal, State, local, Tribal, foreign, or international government agencies. This sharing will take place only after USDA determines that the receiving component or agency has a need to know the information to carry out national security, law enforcement, immigration, intelligence, or other functions consistent with the routine uses set forth in this system of records notice.

2. Two systems are being deleted as follows:

A. Current Research Information System, USDA/CSREES–1, is being deleted as the records no longer meet the requirements for a Privacy Act system of records.

B. International Programs Recruitment Roster, USDA/CSREES–2 is being deleted as the records are no longer relevant and necessary to accomplish a purpose of the Agency. The records no longer exist.

Notice is hereby given that USDA is revising two PA systems of records and deleting two PA systems of records maintained by NIFA, formerly CSREES.

II. Privacy Act

The Privacy Act embodies fair information principles in a statutory framework governing the means by which the United States Government collects, maintains, uses, and disseminates individuals' records. The Privacy Act applies to information that is maintained in a ''system of records.'' A ''system of records'' is a group of any records under the control of an agency for which information is retrieved by the name of an individual or by some identifying number, symbol, or other identifying particular assigned to the individual. In the Privacy Act, an individual is defined to encompass United States citizens and lawful permanent residents.

The Privacy Act requires each agency to publish in the **Federal Register** a description denoting the type and character of each system of records that the agency maintains, and the routine uses that are contained in each system in order to make agency recordkeeping practices transparent, to notify individuals regarding the uses to which their records are put, and to assist individuals to more easily find such files within the agency.

Below are descriptions of the State Cooperative Extension Service Employees, USDA/NIFA–2, and the National Institute of Food and Agriculture Grant Systems, USDA/NIFA–3.

In accordance with 5 U.S.C. 552a(r), USDA has provided a report of this system of records to the Administrator, Office of Information and Regulatory Affairs, Office of Management and Budget; Chairman, Committee on Homeland Security and Governmental Affairs, United States Senate; and Chairman, Committee on Oversight and Government Reform, U.S. House of Representatives.

Dated: April 2, 2012.

Thomas J. Vilsack,

Secretary.

SYSTEM OF RECORDS NOTICE

USDA/NIFA–2

SYSTEM NAME:

State Cooperative Extension Service Employees, USDA/NIFA–2.

SECURITY CLASSIFICATION:

None.

SYSTEM LOCATION:

Records are maintained at the Department of Agriculture (USDA), Agricultural Research Service (ARS), Human Resources Division (HRD), Metropolitan Services Branch (MSB), Portals Building, 1280 Maryland Avenue SW., Washington, DC 20024.

CATEGORIES OF INDIVIDUALS COVERED BY THE SYSTEM:

Categories of individuals covered by this system include: All professional employees of the State Cooperative Extension Service from 1968 to present.

CATEGORIES OF RECORDS IN THE SYSTEM:

Categories of records in this system include: Personnel and payroll information on professional State Cooperative Extension Service employees.

AUTHORITY FOR MAINTENANCE OF THE SYSTEM:

7 U.S.C. 341, *et seq.*

PURPOSE(S):

The purpose of this system is to prepare the annual salary analysis report that is used as a management tool for salary analysis purposes as well as historical purposes.

ROUTINE USES OF RECORDS MAINTAINED IN THE SYSTEM, INCLUDING CATEGORIES OF USERS AND THE PURPOSES OF SUCH USES:

In addition to those disclosures generally permitted under 5 U.S.C. 552a(b) of the Privacy Act, all or a portion of the records or information contained in this system may be disclosed outside USDA as a routine use pursuant to 5 U.S.C. 552a(b)(3) as follows:

A. To the Department of Justice (DOJ), including United States Attorney Offices, or other Federal agency conducting litigation or in proceedings before any court, adjudicative or administrative body, when it is necessary to the litigation and one of the following is a party to the litigation or has an interest in such litigation:

1. USDA or any component thereof;

2. Any employee of USDA in his/her official capacity;

3. Any employee of USDA in his/her individual capacity where DOJ or USDA has agreed to represent the employee; or

4. The United States or any agency thereof, is a party to the litigation or has an interest in such litigation, and USDA determines that the records are both relevant and necessary to the litigation and the use of such records is compatible with the purpose for which USDA collected the records.

B. To a congressional office from the record of an individual in response to an inquiry from that congressional office made at the written request of the individual to whom the record pertains.

C. To the National Archives and Records Administration or other Federal government agencies pursuant to records management inspections being conducted under the authority of 44 U.S.C. 2904 and 2906.

D. To an agency, organization, or individual for the purpose of performing audit or oversight operations as authorized by law, but only such information as is necessary and relevant to such audit or oversight function.

E. To appropriate agencies, entities, and persons when:

1. NIFA suspects or has confirmed that the security or confidentiality of information in the system of records has been compromised;

2. USDA has determined that as a result of the suspected or confirmed compromise there is a risk of harm to economic or property interests, identity theft or fraud, or harm to the security or integrity of this system or other systems or programs (whether maintained by USDA or another agency or entity) or harm to the individuals who rely upon the compromised information; and

3. The disclosure made to such agencies, entities, and persons is reasonably necessary to assist in connection with USDA's efforts to respond to the suspected or confirmed compromise and prevent, minimize, or remedy such harm.

F. To contractors and their agents, grantees, experts, consultants, and others performing or working on a contract, service, grant, cooperative agreement, or other assignment for USDA, when necessary to accomplish an agency function related to this system of records. Individuals provided information under this routine use are subject to the same Privacy Act requirements and limitations on disclosure as are applicable to USDA officers and employees.

G. To an appropriate Federal, State, Tribal, local, international, or foreign law enforcement agency or other appropriate authority charged with investigating or prosecuting a violation or enforcing or implementing a law, rule, regulation, or order, where a record, either on its face or in conjunction with other information, indicates a violation or potential violation of law, which includes criminal, civil, or regulatory violations, whether arising by general statute or particular program statute, or by regulation, rule, or order issued pursuant thereto if the information disclosed is relevant to any enforcement, regulatory, investigative, or prosecutive responsibility of the receiving entity.

DISCLOSURE TO CONSUMER REPORTING AGENCIES:

None.

POLICIES AND PRACTICES FOR STORING, RETRIEVING, ACCESSING, RETAINING, AND DISPOSING OF RECORDS IN THE SYSTEM:

STORAGE:

Records in this system are maintained in an electronic database in a secured facility.

RETRIEVABILITY:

Records may be retrieved by a unique State identifying number or last name of the individual.

SAFEGUARDS:

Records in this system are safeguarded in accordance with applicable rules and policies, including all applicable USDA automated systems security and access policies. Strict controls have been imposed to minimize the risk of compromising the information that is being stored. Access to the computer system containing the records in this system is limited to those individuals who have a need to know the information for the performance of their official duties and who have appropriate clearances or permissions. Authorization must be obtained from the Director, NIFA, or the Chief, MSB–HRD, ARS, before information is released. All records are accessed by unique passwords and logon procedures.

RETENTION AND DISPOSAL:

Records are retained under the authority of the REE Policies and Procedures contained in REE Manual 251.8 ''Records Management'' and 251.8M ''Records Management (Manual)'', which establishes REE policies and procedures for the creation, maintenance, and disposition of records, and in accordance with the General Records Schedules issued by the National Archives and Records Administration. Records are retained indefinitely.

SYSTEM MANAGER(S) AND ADDRESS(ES):

Personnel and Data Information Specialist, MSB, HRD, ARS, USDA, Portals Building, 1280 Maryland Avenue SW., Washington, DC 20024.

NOTIFICATION PROCEDURE:

Individuals seeking notification of and access to any record contained in this system of records, or seeking to contest its content, may submit a request in writing to the Headquarters or component's Freedom of Information Act (FOIA) Officer, whose contact information can be found at *http://www.dm.usda.gov/foia_agency_pocs.htm* under ''contacts.'' If an individual believes more than one component maintains Privacy Act records concerning him or her, the individual may submit the request to the Chief FOIA Officer, Department of Agriculture, 1400 Independence Avenue SW., Washington, DC 20250.

When seeking records about yourself from this system of records or any other Departmental system of records, your request must conform with the Privacy Act regulations set forth in 6 CFR part 5. You must first verify your identity, meaning that you must provide your full name, current address, and date and place of birth. You must sign your request, and your signature must either be notarized or submitted under 28 U.S.C. 1746, a law that permits statements to be made under penalty of perjury as a substitute for notarization. While no specific form is required, you may obtain forms for this purpose from the Chief FOIA Officer, Department of Agriculture, 1400 Independence Avenue SW., Washington, DC 20250. In addition you should provide the following:

- An explanation of why you believe the Department would have information on you;
- Identify the component(s) of the Department you believe may have the information about you;
- Specify when you believe the records would have been created;
- Any additional information that will help the FOIA staff determine which USDA component agency may have responsive records;
- If your request is seeking records pertaining to another living individual, you must include a statement from that individual certifying his/her agreement for you to access his/her records.

Without this bulleted information, the component(s) may not be able to conduct an effective search, and your request may be denied due to lack of specificity or lack of compliance with applicable regulations.

RECORD ACCESS PROCEDURES:

See ''Notification procedure'' above.

CONTESTING RECORD PROCEDURES:

See ''Notification procedure'' above.

RECORD SOURCE CATEGORIES:

Information in this system comes primarily from the State Cooperative Extension Service employees with additional data provided by the employees' personnel office.

EXEMPTIONS CLAIMED FOR THE SYSTEM:

None.

SYSTEM OF RECORDS NOTICE

USDA/NIFA–3

SYSTEM NAME:

National Institute of Food and Agriculture Grants Systems, USDA/NIFA–3.

SECURITY CLASSIFICATION:

None.

SYSTEM LOCATION:

Records are maintained in Program, Grants, and Funds Management offices and in a computerized system at the National Institute of Food and Agriculture (NIFA), Department of Agriculture (USDA), Waterfront Centre, 800 9th Street SW., Washington, DC 20024.

CATEGORIES OF INDIVIDUALS COVERED BY THE SYSTEM:

Categories of individuals covered by this system include: Individuals that have submitted proposals to NIFA, either individually or through an academic or other institution, and peer reviewers that evaluate NIFA applicants and their proposals.

CATEGORIES OF RECORDS IN THE SYSTEM:

Categories of records in this system include: Records of the project director, the authorized organizational representative, potential proposal reviewers, the proposal and its identifying number, supporting data from the academic institution or other applicant, proposal evaluations from peer reviewers, a review record, financial data, and other related material such as, committee or panel discussion summaries and other agency records containing or reflecting comments on the proposal or the applicants from peer reviewers.

AUTHORITY FOR MAINTENANCE OF THE SYSTEM:

National Agricultural Research, Extension, and Teaching Policy Act of 1977 (NARETPA), 7 U.S.C. 3318.

PURPOSE(S):

NIFA receives research, education, and extension grant applications each year, of which approximately a quarter are awarded. The majority of these applications are subjected to a rigorous peer-review involving technical experts (scientists, educators, farmers, engineers, extension specialists) located world-wide. Given the highly technical nature of many of these applications, the quality of the peer-review greatly depends on the appropriate matching of the subject matter of the application with the technical expertise of the potential reviewer. NIFA maintains a database of potential reviewers. Information in the database is used to match applications with the most appropriate (potential) reviewers. Therefore, the accuracy of the database content is integral to the success of the NIFA peer review process. In addition to the reviewer information, applicant information is maintained for the proper oversight of the Federal funds and is also used to respond to inquiries from Congress, other governmental agencies, and the grantee community.

ROUTINE USES OF RECORDS MAINTAINED IN THE SYSTEM, INCLUDING CATEGORIES OF USERS AND THE PURPOSES OF SUCH USES:

In addition to those disclosures generally permitted under 5 U.S.C. 552a(b) of the Privacy Act, all or a portion of the records or information contained in this system may be disclosed outside USDA as a routine use pursuant to 5 U.S.C. 552a(b)(3) as follows:

A. To the Department of Justice (DOJ), including United States Attorney Offices, or other Federal agency conducting litigation or in proceedings before any court, adjudicative or administrative body, when it is necessary to the litigation and one of the following is a party to the litigation or has an interest in such litigation:

1. USDA or any component thereof;

2. Any employee of USDA in his/her official capacity;

3. Any employee of USDA in his/her individual capacity where DOJ or USDA has agreed to represent the employee; or

4. The United States or any agency thereof, is a party to the litigation or has an interest in such litigation, and USDA determines that the records are both relevant and necessary to the litigation and the use of such records is compatible with the purpose for which USDA collected the records.

B. To a congressional office from the record of an individual in response to an inquiry from that congressional office made at the written request of the individual to whom the record pertains.

C. To the National Archives and Records Administration or other Federal government agencies pursuant to records management inspections being conducted under the authority of 44 U.S.C. 2904 and 2906.

D. To an agency, organization, or individual for the purpose of performing audit or oversight operations as authorized by law, but only such information as is necessary and relevant to such audit or oversight function.

E. To appropriate agencies, entities, and persons when:

1. NIFA suspects or has confirmed that the security or confidentiality of information in the system of records has been compromised;

2. USDA has determined that as a result of the suspected or confirmed compromise there is a risk of harm to economic or property interests, identity theft or fraud, or harm to the security or integrity of this system or other systems or programs (whether maintained by USDA or another agency or entity) or harm to the individual that rely upon the compromised information; and

3. The disclosure made to such agencies, entities, and persons is reasonably necessary to assist in connection with USDA's efforts to respond to the suspected or confirmed compromise and prevent, minimize, or remedy such harm.

F. To contractors and their agents, grantees, experts, consultants, and others performing or working on a contract, service, grant, cooperative agreement, or other assignment for USDA, when necessary to accomplish an agency function related to this system of records. Individuals provided information under this routine use are subject to the same Privacy Act requirements and limitations on disclosure as are applicable to USDA officers and employees.

G. To an appropriate Federal, State, Tribal, local, international, or foreign law enforcement agency or other appropriate authority charged with investigating or prosecuting a violation or enforcing or implementing a law, rule, regulation, or order, where a record, either on its face or in conjunction with other information, indicates a violation or potential violation of law, which includes criminal, civil, or regulatory violations, whether arising by general statute or particular program statute, or by regulation, rule or order issued pursuant thereto if the information disclosed is relevant to any enforcement, regulatory, investigative, or prosecutive responsibility of the receiving entity.

H. USDA will disclose information about individuals from this system of records in accordance with the Federal Funding Accountability and Transparency Act of 2006 (Pub. L. No. 109–282; codified at 31 U.S.C. 6101, *et*

seq.); section 204 of the E-Government Act of 2002 (Pub. L. 107–347; 44 U.S.C. 3501 note), and the Office of Federal Procurement Policy Act (41 U.S.C. 403 *et seq.*), or similar statutes requiring agencies to make available publicly information concerning Federal financial assistance, including grants, subgrants, loan awards, cooperative agreements and other financial assistance; and contracts, subcontracts, purchase orders, task orders, and delivery orders.

I. To other Federal agencies needing names of potential reviewers or specialists in particular fields.

J. To other Federal agencies as part of the Presidential Management Initiative, E-Grants.

DISCLOSURE TO CONSUMER REPORTING AGENCIES:

None.

POLICIES AND PRACTICES FOR STORING, RETRIEVING, ACCESSING, RETAINING, AND DISPOSING OF RECORDS IN THE SYSTEM:

STORAGE:

Records are maintained on system file servers and paper files in the program offices at NIFA, USDA, Waterfront Centre, 800 9th Street SW., Washington, DC 20024.

RETRIEVABILITY:

Records can be retrieved by name, project leader, co-investigator, and any other data field such as institution or title.

SAFEGUARDS:

Records in this system are safeguarded in accordance with applicable rules and policies, including all applicable USDA automated systems security and access policies. Strict controls have been imposed to minimize the risk of compromising the information that is being stored. Access to the computer system containing the records in this system is limited to those individuals who have a need to know the information for the performance of their official duties and who have appropriate clearances or permissions. All records containing personal information are maintained in secured file cabinets or are accessed by unique passwords and logon procedures. Only those employees with a need-to-know in order to perform their duties will be able to access the information.

RETENTION AND DISPOSAL:

Records are retained under the authority of the REE Policies and Procedures contained in REE Manual 251.8 ''Records Management'' and 251.8M ''Records Management (Manual)'', which establishes REE policies and procedures for the creation, maintenance, and disposition of records, and in accordance with the General Records Schedules issued by the National Archives and Records Administration. The Data File is cumulative and is maintained indefinitely, and documents are disposed according to agency file plan and disposition schedule. Non-funded proposals are maintained onsite for 1 year and then disposed after 3 years. Funded proposals are maintained onsite for 1 year after completion of the award, and then transferred to the National Archive and Records Administration.

SYSTEM MANAGER(S) AND ADDRESS(ES):

Deputy Administrator, Office of Information Technology (OIT), NIFA, USDA, Stop 2216, 1400 Independence Avenue SW., Washington, DC 20250–2216. The address for express mail or overnight courier service is: Deputy Administrator, OIT, NIFA, USDA, Waterfront Centre, 800 9th Street SW., Washington, DC 20024.

NOTIFICATION PROCEDURE:

Individuals seeking notification of and access to any record contained in this system of records, or seeking to contest its content, may submit a request in writing to the Headquarters or component's Freedom of Information Act (FOIA) Officer, whose contact information can be found at *http://www.dm.usda.gov/foia_agency_pocs.htm* under ''contacts.'' If an individual believes more than one component maintains Privacy Act records concerning him or her, the individual may submit the request to the Chief FOIA Officer, Department of Agriculture, 1400 Independence Avenue SW., Washington, DC 20250.

When seeking records about yourself from this system of records or any other Departmental system of records your request must conform with the Privacy Act regulations set forth in 6 CFR Part 5. You must first verify your identity, meaning that you must provide your full name, current address and date and place of birth. You must sign your request, and your signature must either be notarized or submitted under 28 U.S.C. 1746, a law that permits statements to be made under penalty of perjury as a substitute for notarization. While no specific form is required, you may obtain forms for this purpose from the Chief FOIA Officer, Department of Agriculture, 1400 Independence Avenue SW., Washington, DC 20250. In addition you should provide the following:

- An explanation of why you believe the Department would have information on you;
- Identify the component(s) of the Department you believe may have the information about you;
- Specify when you believe the records would have been created;
- Any additional information that will help the FOIA staff determine which USDA component agency may have responsive records;
- If your request is seeking records pertaining to another living individual, you must include a statement from that individual certifying his/her agreement for you to access his/her records.

Without this bulleted information the component(s) may not be able to conduct an effective search, and your request may be denied due to lack of specificity or lack of compliance with applicable regulations.

RECORD ACCESS PROCEDURES:

See ''Notification procedure'' above.

CONTESTING RECORD PROCEDURES:

See ''Notification procedure'' above.

RECORD SOURCE CATEGORIES:

Information in this system is obtained from the individuals submitting the proposals and from peer reviewers.

EXEMPTIONS CLAIMED FOR THE SYSTEM:

None.

[FR Doc. 2012–10015 Filed 4–25–12; 8:45 am]

BILLING CODE 3410–22–P

DEPARTMENT OF AGRICULTURE

Office of the Secretary

Privacy Act of 1974; New System of Records

AGENCY: Office of the Secretary, USDA.

ACTION: Notice of a new system of records.

SUMMARY: In accordance with the Privacy Act of 1974, as amended, the Department of Agriculture (USDA) is proposing to add a new Forest Service system to its inventory of records systems. USDA invites public comment on this new records system.

DATES: Comments must be received in writing, on or before May 29, 2012. This system will be adopted without further notice, on June 25, 2012, unless modified to respond to comments received from the public and published in a subsequent notice.

ADDRESSES: Send written comments to the Forest Service Freedom of Information Act and Privacy Act Officer, USDA Forest Service, 1400 Independence Avenue SW., Mail Stop 1143, Washington, DC 20250–1143. Comments may also be sent via email to

wo_foia@fs.fed.us, or via facsimile to (202) 260–3245.

FOR FURTHER INFORMATION CONTACT: Brett Butler, USDA Forest Service, 160 Holdsworth Way, Amherst, Massachusetts 01003–4230, *bbutler01@fs.fed.us,* (413) 545–1387. Individuals who use telecommunication devices for the deaf (TDD) may call the Federal Relay Service (FRS) at 1 (800) 877–8339 between 8 a.m. and 8 p.m., Eastern Standard time, Monday through Friday.

SUPPLEMENTARY INFORMATION:

I. Background

Established in 1905, the Forest Service is an agency of the U.S. Department of Agriculture. The mission of the USDA's Forest Service is to sustain the health, diversity, and productivity of the Nation's forests and grasslands, which encompass 193 million acres of land, to meet the needs of present and future generations.

The purpose of this system is to allow the Forest Service to maintain records regarding contact information of private landowners in the United States who are solicited to participate in the National Woodland Owner Survey (NWOS). The contact information collected is the name, mailing address, phone number, and email address; and it is used to solicit participation in the NWOS. The information collected through the survey is used only to produce statistical reports of general trends in landowner attributes. The results from the survey are stored in a separate database and are not a part of this system of records.

Pursuant to the Privacy Act, and as part of the Forest Service's ongoing effort to review and update system of records notices, the agency proposes a new records system: National Woodland Owner Survey Database.

II. Privacy Act

The Privacy Act embodies fair information principles in a statutory framework governing the means by which the United States Government collects, maintains, uses, and disseminates individuals' records. The Privacy Act applies to information that is maintained in a ''system of records.'' A ''system of records'' is a group of any records under the control of an agency for which information is retrieved by the name of an individual or by some identifying number, symbol, or other identifying particular assigned to the individual. In the Privacy Act, an individual is defined to encompass United States citizens and lawful permanent residents.

The Privacy Act requires each agency to publish in the **Federal Register** a description denoting the type and character of each system of records that the agency maintains, and the routine uses that are contained in each system in order to make agency recordkeeping practices transparent, to notify individuals regarding the uses to which their records are put, and to assist individuals to more easily find such files within the agency. Below is the description of the USDA/FS–58 National Woodland Owner Survey Database.

A report of the proposed system of records, required by 5 U.S.C. 552a(r) as implemented by Office of Management and Budget (OMB) Circular A–130, was sent to the Chairman, Committee on Homeland Security and Governmental Affairs, United States Senate; the Chairman, Committee on Oversight and Government Reform, U.S. House of Representatives; and the Administrator, Office of Information and Regulatory Affairs, OMB.

Dated: March 30, 2012.

Thomas J. Vilsack,

Secretary.

SYSTEM NAME:

National Woodland Owners Database, USDA/FS–58.

SECURITY CLASSIFICATION:

None.

SYSTEM LOCATION:

The records in this system are collected in a database located on secure servers in Kansas City, Missouri.

CATEGORIES OF INDIVIDUALS COVERED BY THE SYSTEM:

Private woodland owners, including individuals, families, businesses, and other private groups, in the United States that are solicited to participate in the National Woodland Owner Survey.

CATEGORIES OF RECORDS IN THE SYSTEM:

Name, mailing address, phone number, email address, and a unique identification number that is internally generated.

AUTHORITY FOR MAINTENANCE OF THE SYSTEM:

16 U.S.C. 1600–1614; 16 U.S.C. 1641–1647

PURPOSE(S):

The purpose of this system is to allow the USDA Forest Service to maintain records regarding private woodland owners in the United States who are solicited to participate in the National Woodland Owner Survey.

ROUTINE USES OF RECORDS MAINTAINED IN THE SYSTEM, INCLUDING CATEGORIES OF USERS AND THE PURPOSES OF SUCH USES:

1. Disclose to the Department of Justice when (a) the agency or any component thereof; or (b) any employee of the agency in his or her official capacity where the Department of Justice has agreed to represent the employee; or (c) the United States Government, is a party to litigation or has an interest in such litigation, and by careful review, the agency determines that the records are both relevant and necessary to the litigation, and the use of such records by the Department of Justice is therefore deemed by the agency to be for a purpose that is compatible with the purpose for which the agency collected the records.

2. Disclose to a court or adjudicative body in a proceeding when (a) the agency or any component thereof; or (b) any employee of the agency in his or her official capacity; or (c) any employee of the agency in his or her individual capacity where the agency has agreed to represent the employee; or (d) the United States Government, is a party to the litigation or has an interest in such litigation, and by careful review, the agency determines that the records are both relevant and necessary to the litigation, and the use of such records is therefore deemed by the agency to be for a purpose that is compatible with the purpose for which the agency collected the records.

3. Disclose when a record on its face, or in conjunction with other records, indicates a violation or potential violation of law, whether civil, criminal, or regulatory in nature, and whether arising by general statute or particular program statute, or by regulation, rule, or order issued pursuant thereto, disclosure may be made to the appropriate agency, whether Federal, foreign, State, local, or Tribal, or other public authority responsible for enforcing or implementing the statute, or rule, regulation, or order issued pursuant thereto, if the information disclosed is relevant to any enforcement, regulatory, investigative, or prosecutive responsibility of the receiving entity.

4. Disclose to a Member of Congress or a Congressional staff member in response to an inquiry of the Congressional office made at the written request of the constituent about whom the record is maintained.

5. Disclose to the National Archives and Records Administration or to the General Services Administration for records management inspections conducted under 44 U.S.C. 2904 and 2906.

6. Disclose to employees of USDA's National Agricultural Statistics Service, agency contractors, grantees, experts, consultants, or volunteers who have been engaged by the agency to assist in the performance of a service related to this system of records and who need to have access to the records in order to perform the activity. Recipients shall be required to comply with the requirements of the Privacy Act of 1974, as amended, pursuant to 5 U.S.C. 552a(m).

7. Disclose to appropriate agencies, entities, and persons when (1) the Department suspects or has confirmed that the security or confidentiality of information in the system of records has been compromised; (2) the Department has determined that as a result of the suspected or confirmed compromise there is a risk of harm to economic or property interests, identity theft or fraud, or harm to the security or integrity of this system or other systems or programs (whether maintained by the Department or another agency or entity) that rely upon the compromised information; and (3) the disclosure made to such agencies, entities, and persons is reasonably necessary to assist in connection with the Department's efforts to respond to the suspected or confirmed compromise and prevent, minimize, or remedy such harm.

POLICIES AND PRACTICES FOR STORING, RETRIEVING, ACCESSING, RETAINING, AND DISPOSING OF RECORDS IN THE SYSTEM:

STORAGE:

Information is maintained in an electronic database and stored on secured servers in Kansas City, Missouri.

RETRIEVABILITY:

Electronic records are indexed and retrieved electronically using multiple queries including name, unique identification number, or other criteria.

SAFEGUARDS:

All electronic records are maintained in a secure, password-protected, database and stored on secured servers in Kansas City, Missouri. The server is protected by a firewall, and a password is required for access. Access is limited to the database manager and to personnel authorized by the database manager.

RETENTION AND DISPOSAL:

Records are maintained under file code 4810 and retained and disposed of in accordance with the appropriate General Records Schedules of the National Archives and Records Administration.

SYSTEM MANAGER(S) AND ADDRESS:

National Woodland Owner Survey Coordinator, USDA Forest Service, 160 Holdsworth Way, Amherst, Massachusetts 01003.

NOTIFICATION PROCEDURE:

Individuals may request information regarding this system of records, or information as to whether the system contains records pertaining to them from the System Manager (address above). When seeking records about yourself from this system of records or any other Departmental system of records, your request must conform with the Privacy Act regulations set forth in 6 CFR part 5. You must first verify your identity, meaning that you must provide your full name, current address, and date and place of birth. You must sign your request, and your signature must either be notarized or submitted under 28 U.S.C. 1746, a law that permits statements to be made under penalty of perjury as a substitute for notarization. While no specific form is required, you may obtain forms for this purpose from the Freedom of Information Act and Privacy Act Officer, USDA Forest Service, 1400 Independence Avenue SW., Mailstop 1143, Washington, DC 20250–1143, *wo_foia@fs.fed.us,* (202) 205–1542.

RECORD ACCESS PROCEDURES:

Individuals who wish to gain access to or amend records pertaining to them should submit a written request to the System Manager (address above). The envelope should be marked ''Privacy Act Request.''

CONTESTING RECORD PROCEDURES:

Use the same procedures as those described in Notification procedures.

RECORD SOURCE CATEGORIES:

Information on private woodland owners is initially collected from public records, such as property tax rolls. The information is then maintained and updated with information received from owners who voluntarily participate in the National Woodland Owner Survey.

EXEMPTIONS CLAIMED FOR THE SYSTEM:

None.

[FR Doc. 2012–10017 Filed 4–25–12; 8:45 am]

BILLING CODE 3410–11–P

DEPARTMENT OF COMMERCE

Submission for OMB Review; Comment Request

The Department of Commerce will submit to the Office of Management and Budget (OMB) for clearance the following proposal for collection of information under the provisions of the Paperwork Reduction Act (44 U.S.C. chapter 35).

Agency: International Trade Administration (ITA).

Title: Watch Duty-Exemption and 7113 Jewelry Duty-Refund Program.

Form Number(s): ITA–340P, ITA–360P, ITA–361P.

OMB Control Number: 0625–0134.

Type of Request: Regular submission (extension of a currently approved information collection).

Number of Respondents: 2.

Average Hours per Response: 6 minutes for Form ITA–340P; 10 minutes for Form ITA–361P; and 1 minute to transfer a certificate using Form ITA–360P.

Burden Hours: 4.

Needs and Uses: Public Law 97–446 as amended, requires the Department of Commerce and Department of the Interior to administer the distribution of watch duty exemptions and watch and jewelry duty refunds to program producers in the U.S. insular possessions (American Samoa, Guam, U.S. Virgin Islands, and the Northern Mariana Islands).

Form ITA–340P provides the data to assist in the verification of duty-free shipments and make certain the allocations are not exceeded. Form ITA–360P and ITA–361P are necessary to implement the duty refund program. The primary consideration in collecting information is the enforcement of the law and the information gathered is limited to that necessary to prevent abuse of the program and to permit a fair and equitable distribution of its benefits.

Affected Public: Business or other for-profit organizations.

Frequency: On occasion.

Respondent's Obligation: Required to obtain or retain a benefit.

OMB Desk Officer: Wendy Liberante, (202) 395–3647.

Copies of the above information collection proposal can be obtained by calling or writing Jennifer Jessup, Departmental Paperwork Clearance Officer, (202) 482–0336, Department of Commerce, Room 6616, 14th and Constitution Avenue NW., Washington, DC 20230 (or via the Internet at *jjessup@doc.gov*).

Written comments and recommendations for the proposed information collection should be sent within 30 days of publication of this notice to Wendy Liberante, OMB Desk Officer, Fax number (202) 395–5167 or via the Internet at *Wendy_L._Liberante@omb.eop.gov*.

Dated: April 23, 2012.

Gwellnar Banks,

Management Analyst, Office of the Chief Information Officer.

[FR Doc. 2012–10066 Filed 4–25–12; 8:45 am]

BILLING CODE 3510–DS–P

DEPARTMENT OF COMMERCE

Submission for OMB Review; Comment Request

The Department of Commerce will submit to the Office of Management and Budget (OMB) for clearance the following proposal for collection of information under the emergency provisions of the Paperwork Reduction Act (44 U.S.C. chapter 35).

Agency: International Trade Administration.

Title: Market Research to Broaden and Deepen U.S. Exporter Base.

OMB Control Number: 0625–0264.

Form Number(s): ITA–4158P (formerly 8710); ITA–4159P (formerly 8711); ITA–4160P (formerly 8712); and ITA–4161P (formerly 8713).

Type of Review: Regular submission (extension of a currently approved information collection).

Number of Respondents: 4,800.

Average Hours per Response: 15 minutes for ITA–4158P; and 30 minutes for ITA–4159P, ITA–4160P, and ITA–4161P.

Burden Hours: 2,300.

Needs and Uses: Expanding U.S. exports is a national priority essential to improving U.S. trade performance. The Department of Commerce (DOC) International Trade Administration (ITA) U.S. Commercial Service (CS) serves as the key U.S. government agency responsible for promoting exports of goods and services from the United States, particularly by small and medium-sized enterprises, and assisting U.S. exporters in their dealings with foreign governments.

Section 4721 of 15 United States Code contains several provisions that direct the CS to, ''identify United States businesses with the potential to export goods and services and provide such businesses with advice and information on establishing export businesses.'' As such, the long-term performance goal of the CS is to ''broaden and deepen the U.S. exporter base.''

Affected Public: Business or other for-profit organizations.

Frequency: Once (ITA–4158P, ITA–4159P, and ITA–4160P); Annually (ITA–4161P).

Respondent's Obligation: Voluntary.

OMB Desk Officer: Wendy Liberante, (202) 395–3647.

Copies of the above information collection proposal can be obtained by calling or writing Jennifer Jessup, Departmental Paperwork Clearance Officer, (202) 482–0336, Department of Commerce, Room 6616, 14th and Constitution Avenue NW., Washington, DC 20230 (or via the Internet at *JJessup@doc.gov*).

Written comments and recommendations for the proposed information collection should be sent within 30 days of publication of this notice to Wendy Liberante, OMB Desk Officer, Fax number (202) 395–5167 or via the Internet at *Wendy_L._Liberante@omb.eop.gov.*

Dated: April 23, 2012.

Gwellnar Banks,

Management Analyst, Office of the Chief Information Officer.

[FR Doc. 2012–10067 Filed 4–25–12; 8:45 am]

BILLING CODE 3510–13–P

DEPARTMENT OF COMMERCE

International Trade Administration

[A–427–602, A–428–806, A–475–601, A–588–704]

Brass Sheet and Strip From France, Italy, Germany and Japan: Continuation of Antidumping Duty Orders

AGENCY: Import Administration, International Trade Administration, Department of Commerce.

SUMMARY: As a result of the determinations by the Department of Commerce (the ''Department'') that revocation of the antidumping duty (''AD'') orders on brass sheet and strip from France, Germany, Italy and Japan would likely lead to continuation or recurrence of dumping, and the determinations by the International Trade Commission (the ''ITC'') that revocation of the AD orders would likely lead to a continuation or recurrence of material injury to an industry in the United States, the Department is publishing this notice of the continuation of the AD orders.

DATES: *Effective Date:* April 26, 2012.

FOR FURTHER INFORMATION CONTACT: Mahnaz Khan or Yasmin Nair, AD/CVD Operations, Office 1, Import Administration, U.S. Department of Commerce, 14th Street and Constitution Avenue NW., Washington, DC 20230; telephone (202) 482–0914 and (202) 482–3813, respectively.

SUPPLEMENTARY INFORMATION:

Background

On March 1 and 2, 2011, respectively, the Department and the ITC initiated the third sunset reviews of the antidumping duty orders on brass sheet and strip from France, Italy, Germany and Japan, pursuant to section 751(c) of the Tariff Act of 1930, as amended (''the Act''). *See Initiation of Five-Year (''Sunset'') Review,* 76 FR 11202 (March 1, 2011); and *Brass Sheet and Strip from France, Germany, Italy, and Japan,* Investigations Nos. 731–TA–313, 314, 317, and 379 (Third Review), 76 FR 11509 (March 2, 2011). As a result of this sunset review, the Department determined that revocation of the antidumping duty orders on brass sheet and strip from France, Italy, Germany and Japan would be likely to lead to continuation or recurrence of dumping and notified the ITC of the magnitude of the margins likely to prevail should the orders be revoked. *See Brass Sheet and Strip from France, Italy and Japan: Final Results of the Expedited Third Sunset Reviews of the Antidumping Duty Orders,* 76 FR 39849 (July 7, 2011); and *Brass Sheet and Strip from Germany: Final Results of the Full Third Five-Year (''Sunset'') Review of the Antidumping Duty Order,* 77 FR 4762, (January 31, 2012).

On April 19, 2012, pursuant to section 752(a) of the Act, the ITC published its determination that revocation of the antidumping duty orders on brass sheet and strip from France, Germany, Italy and Japan would likely lead to continuation or recurrence of material injury to an industry in the United States within a reasonably foreseeable time. *See Brass Sheet and Strip from France, Germany, Italy and Japan,* Investigation Nos. 731 TA 313, 314, 317 and 379 (Third Review), 77 FR 23508 (April 19, 2012).

Scope of the Orders

The product covered by the orders is brass sheet and strip, other than leaded and tinned brass sheet and strip. The chemical composition of the covered product is currently defined in the Copper Development Association (''C.D.A.'') 200 Series or the Unified Numbering System (''U.N.S.'') C2000. The orders do not cover products the chemical compositions of which are defined by other C.D.A. or U.N.S. series. In physical dimensions, the product covered by the orders has a solid rectangular cross section over 0.006 inches (0.15 millimeters) through 0.188 inches (4.8 millimeters) in finished thickness or gauge, regardless of width. Coiled, wound-on-reels (traverse wound), and cut-to-length products are

included. The merchandise is currently classified under Harmonized Tariff Schedule of the United States (''HTSUS'') item numbers 7409.21.00 and 7409.29.00.

Although the HTSUS item numbers are provided for convenience and customs purposes, the written description of the scope of the orders remains dispositive.

Continuation of the Order

As a result of the determinations by the Department and the ITC that revocation of these antidumping duty orders would likely lead to continuation or recurrence of dumping and material injury to an industry in the United States, pursuant to section 751(d)(2) of the Act, the Department hereby orders the continuation of the antidumping duty orders on brass sheet and strip from France, Italy, Germany and Japan.

U.S. Customs and Border Protection will continue to collect antidumping duty cash deposits at the rates in effect at the time of entry for all imports of subject merchandise. The effective date of continuation of these orders will be the date of publication in the **Federal Register** of this notice of continuation. Pursuant to section 751(c)(2) of the Act, the Department intends to initiate the next five-year review of this order not later than 30 days prior to the fifth anniversary of the effective date of continuation.

This five-year sunset review and this notice are in accordance with section 751(c) of the Act and published pursuant to section 777(i)(1) of the Act.

Dated: April 20, 2012.

Paul Piquado,

Assistant Secretary for Import Administration.

[FR Doc. 2012–10091 Filed 4–25–12; 8:45 am]

BILLING CODE 3510–DS–P

DEPARTMENT OF COMMERCE

National Oceanic and Atmospheric Administration

Hydrographic Services Review Panel Meeting

AGENCY: National Ocean Service, National Oceanic and Atmospheric Administration (NOAA), Department of Commerce.

ACTION: Notice of open meeting.

SUMMARY: The Hydrographic Services Review Panel (HSRP) is a Federal Advisory Committee established to advise the Under Secretary of Commerce for Oceans and Atmosphere on matters related to the responsibilities and authorities set forth in section 303 of the Hydrographic Services Improvement Act of 1998, its amendments, and such other appropriate matters that the Under Secretary refers to the Panel for review and advice.

DATES: *Date and Time:* The public meeting will be held on May 22–24, 2012. May 22nd from 8:30 a.m. to 5:45 p.m.; May 23rd from 8:30 a.m. to 5:15 p.m.; and May 24th from 8:30 a.m. to 5:00 p.m.

Location: Hilton Anchorage, 500 West Third Avenue, Anchorage, Alaska, 99501, tel: (907) 272–7411. Refer to the HSRP Web site listed below for the most current meeting agenda. Times and agenda topics are subject to change.

FOR FURTHER INFORMATION CONTACT: Kathy Watson, HSRP Program Coordinator, National Ocean Service (NOS), Office of Coast Survey, NOAA (N/CS), 1315 East West Highway, Silver Spring, Maryland 20910; Telephone: 301–713–2770 ext. 158; Fax: 301–713–4019; Email: *Hydroservices.panel@noaa.gov* or visit the NOAA HSRP Web site at *http://nauticalcharts.noaa.gov/ocs/hsrp/hsrp.htm.*

SUPPLEMENTARY INFORMATION: The meeting will be open to the public and public comment periods (on-site) will be scheduled at various times throughout the meeting. These comment periods will be included in the final agenda published before May 14, 2012, on the HSRP Web site listed above. Each individual or group making a verbal presentation will be limited to a total time of five (5) minutes. Comments will be recorded. Written comments should be submitted to *Hydroservices.panel@noaa.gov* by May 11, 2012. Written comments received after May 11, 2012 will be distributed to the HSRP, but may not be reviewed until the meeting. Approximately 30 seats will be available for the public, on a first-come, first-served basis.

Matters To Be Considered: Discussion, dialogue and deliberation on navigation services issues for the Alaska/Arctic region such as: (1) The importance and need for quality and timely delivery of NOAA's navigation products, services, and information for the Alaska/Arctic region; (2) multi-mission application of NOAA's geospatial, tide and water level, and hydrographic products, services and information for the Alaska/Arctic region; (3) the use and need of navigation services to support NOAA's Arctic Vision and Strategy; and (4) provide non-navigation users with services, data, products and expertise. Two stakeholder panels will present and identify issues, recommend improvements for and/or address concerns related to Alaska/Arctic regional navigation and geospatial, tide and water level, products, services and information, as well as environmental hazards and coastal management. There will be four breakout sessions where HSRP Panel members will meet with stakeholders and users to hear and discussn ideas/suggestions for improvements to NOAA's navigation, geospatial, tide and water level products, services and information for the Alaska/Arctic region. Other matters to be discussed will include HSRP working group updates, meeting administration, and public comments.

Dated: April 12, 2012.

John E. Lowell, Jr.,

Director, Office of Coast Survey, National Ocean Service, National Oceanic and Atmospheric Administration.

[FR Doc. 2012–9702 Filed 4–25–12; 8:45 am]

BILLING CODE 3510–JE–P

CONSUMER PRODUCT SAFETY COMMISSION

Sunshine Act Meetings

FEDERAL REGISTER CITATION OF PREVIOUS ANNOUNCEMENT: Vol. 77, No. 77, Friday, April 20, 2012, page 23666.

ANNOUNCED TIME AND DATE OF MEETING: Wednesday, April 25, 2012, 10 a.m.–11 a.m.

MEETING CANCELED. For a recorded message containing the latest agenda information, call (301) 504–7948.

CONTACT PERSON FOR ADDITIONAL INFORMATION: Todd A. Stevenson, Office of the Secretary, 4330 East West Highway, Bethesda, MD 20814 (301) 504–7923.

Dated: April 24, 2012.

Todd A. Stevenson,

Secretary.

[FR Doc. 2012–10188 Filed 4–24–12; 4:15 pm]

BILLING CODE 6355–01–P

DEPARTMENT OF EDUCATION

Notice of Proposed Information Collection Requests; Office of the Secretary; Race to the Top Annual Performance Report

SUMMARY: The Department has developed a Race to the Top Annual Performance Report that is tied directly to the Race to the Top selection criteria and priorities previously established and published in the **Federal Register**. The report is grounded in the key

performance targets included in grantees' approved Race to the Top plans. Grantees will be required to report on their progress in the four core education reform areas and in Science, Technology, Engineering, and Mathematics. This reporting includes narrative sections on progress and key performance indicators. As was the case in the completion of the Race to the Top applications, grantees will coordinate with LEAs to collect and report on school and district-level data elements.

DATES: Interested persons are invited to submit comments on or before June 25, 2012.

ADDRESSES: Written comments regarding burden and/or the collection activity requirements should be electronically mailed to *ICDocketMgr@ed.gov* or mailed to U.S. Department of Education, 400 Maryland Avenue SW., LBJ, Washington, DC 20202–4537. Copies of the proposed information collection request may be accessed from *http://edicsweb.ed.gov,* by selecting the ''Browse Pending Collections'' link and by clicking on link number 04845. When you access the information collection, click on ''Download Attachments'' to view. Written requests for information should be addressed to U.S. Department of Education, 400 Maryland Avenue SW., LBJ, Washington, DC 20202–4537. Requests may also be electronically mailed to *ICDocketMgr@ed.gov* or faxed to 202–401–0920. Please specify the complete title of the information collection and OMB Control Number when making your request.

Individuals who use a telecommunications device for the deaf (TDD) may call the Federal Information Relay Service (FIRS) at 1–800–877–8339.

SUPPLEMENTARY INFORMATION: Section 3506 of the Paperwork Reduction Act of 1995 (44 U.S.C. chapter 35) requires that Federal agencies provide interested parties an early opportunity to comment on information collection requests. The Director, Information Collection Clearance Division, Privacy, Information and Records Management Services, Office of Management, publishes this notice containing proposed information collection requests at the beginning of the Departmental review of the information collection. The Department of Education is especially interested in public comment addressing the following issues: (1) Is this collection necessary to the proper functions of the Department; (2) will this information be processed and used in a timely manner; (3) is the estimate of burden accurate; (4) how might the Department enhance the quality, utility, and clarity of the information to be collected; and (5) how might the Department minimize the burden of this collection on the respondents, including through the use of information technology. Please note that written comments received in response to this notice will be considered public records.

Title of Collection: Race to the Top Annual Performance Report.

OMB Control Number: 1894–0012.

Type of Review: Reinstatement, without change of a previously approved collection.

Total Estimated Number of Annual Responses: 19.

Total Estimated Number of Annual Burden Hours: 1,845.

Abstract: The American Recovery and Reinvestment Act provides $4.3 billion for the Race to the Top Fund (referred to in the statute as the State Incentive Grant Fund). This is a competitive grant program. The purpose of the program is to encourage and reward States that are creating the conditions for education innovation and reform; achieving significant improvement in student outcomes, including making substantial gains in student achievement, closing achievement gaps, improving high school graduation rates, and ensuring student preparation for success in college and careers; and implementing ambitious plans in four core education reform areas: (a) Adopting internationally-benchmarked standards and assessments that prepare students for success in college and and the workplace; (b) building data systems that measure student success and inform teachers and principals in how they can improve their practices; (c) increasing teacher effectiveness and achieving equity in teacher distribution; and (d) turning around our lowest-achieving schools.

In order to fulfill our responsibilities for programmatic oversight and public reporting, the Department has developed a Race to the Top Annual Performance Report that is tied directly to the Race to the Top selection criteria and priorities previously established and published in the **Federal Register**. The report is grounded in the key performance targets included in grantees' approved Race to the Top plans. Grantees will be required to report on their progress in the four core education reform areas and in Science, Technology, Engineering, and Mathematics. This reporting includes narrative sections on progress and key performance indicators. As was the case in the completion of the Race to the Top applications, grantees will coordinate with LEAs to collect and report on school and district-level data elements.

In order to robustly fulfill our programmatic and fiscal oversight responsibilities, it is essential that we gather this data from Race to the Top grantees and subgrantees. In the first year of the grant, the APR was collected through an emergency clearance approval. In order to allow for a comprehensive assessment of progress for the remaining grant period to both update the public and Congress about Race to the Top and pinpoint areas requiring technical assistance, we are requesting a three-year clearance with this form.

Additionally, through the Department of Defense and Full-Year Continuing Appropriations Act, 2011 (FY 2011 Appropriations Act), the Department made a total of $200 million in grants to seven additional States in Phase 3 to invest in a portion of their plans from the Phase 2 competition. The Department is requesting these States, who will complete a sub-set of the APR based on their approved plans, be included in the three-year clearance with this form.

Dated: April 23, 2012.

Darrin A. King,

Director, Information Collection Clearance Division, Privacy, Information and Records Management Services, Office of Management.

[FR Doc. 2012–10090 Filed 4–25–12; 8:45 am]

BILLING CODE 4000–01–P

DEPARTMENT OF EDUCATION

[CFDA Number 84.133A–01]

Proposed Priority—National Institute on Disability and Rehabilitation Research—Disability and Rehabilitation Research Projects and Centers Program—Disability and Rehabilitation Research Project (DRRP)—Employment of Individuals With Disabilities

AGENCY: Office of Special Education and Rehabilitative Services, Department of Education.

ACTION: Notice.

SUMMARY: The Assistant Secretary for Special Education and Rehabilitative Services proposes a priority under the Disability and Rehabilitation Research Projects and Centers Program administered by the National Institute on Disability and Rehabilitation Research (NIDRR). Specifically, this notice proposes a priority for a Disability and Rehabilitation Research Project (DRRP) on Employment of Individuals with Disabilities. The

Assistant Secretary may use this priority for competitions in fiscal year (FY) 2012 and later years. We take this action to focus research attention on areas of national need. We intend this priority to contribute to improved employment outcomes for individuals with disability.

DATES: We must receive your comments on or before May 29, 2012.

ADDRESSES: Address all comments about this notice to Marlene Spencer, U.S. Department of Education, 400 Maryland Avenue SW., room 5133, Potomac Center Plaza (PCP), Washington, DC 20202–2700.

If you prefer to send your comments by email, use the following address: *Marlene.Spencer@ed.gov*. You must include the phrase ''Proposed Priority for Employment of Individuals with Disabilities'' in the subject line of your electronic message.

FOR FURTHER INFORMATION CONTACT: Marlene Spencer. Telephone: (202) 245–7532 or by email: *Marlene.Spencer@ed.gov*.

If you use a telecommunications device for the deaf (TDD) or a text telephone (TTY), call the Federal Relay Service (FRS), toll free, at 1–800–877–8339.

SUPPLEMENTARY INFORMATION: This notice of proposed priority is in concert with NIDRR's currently approved Long-Range Plan (Plan). The currently approved Plan, which was published in the **Federal Register** on February 15, 2006 (71 FR 8165), can be accessed on the Internet at the following site: *http://www2.ed.gov/legislation/FedRegister/other/2006-1/021506d.pdf*.

Through the implementation of the currently approved Plan, NIDRR seeks to: (1) Improve the quality and utility of disability and rehabilitation research; (2) foster an exchange of expertise, information, and training to facilitate the advancement of knowledge and understanding of the unique needs of traditionally underserved populations; (3) determine best strategies and programs to improve rehabilitation outcomes for underserved populations; (4) identify research gaps; (5) identify mechanisms of integrating research and practice; and (6) disseminate findings.

This notice proposes a priority that NIDRR intends to use for a DRRP competition in FY 2012 and possibly later years. However, nothing precludes NIDRR from publishing additional priorities, if needed. Furthermore, NIDRR is under no obligation to make an award using this priority. The decision to make an award will be based on the quality of applications received and available funding.

Invitation to Comment: We invite you to submit comments regarding this notice. To ensure that your comments have maximum effect in developing the notice of final priority, we urge you to identify clearly the specific topic that each comment addresses.

We invite you to assist us in complying with the specific requirements of Executive Orders 12866 and 13563 and their overall requirement of reducing regulatory burden that might result from this proposed priority. Please let us know of any further ways we could reduce potential costs or increase potential benefits while preserving the effective and efficient administration of the program.

During and after the comment period, you may inspect all public comments about this notice in Room 5133, 550 12th Street SW., PCP, Washington, DC, between the hours of 8:30 a.m. and 4 p.m., Washington, DC time, Monday through Friday of each week except Federal holidays. *Assistance to Individuals with Disabilities in Reviewing the Rulemaking Record:* On request we will provide an appropriate accommodation or auxiliary aid to an individual with a disability who needs assistance to review the comments or other documents in the public rulemaking record for this notice. If you want to schedule an appointment for this type of accommodation or auxiliary aid, please contact the person listed under **FOR FURTHER INFORMATION CONTACT**.

Purpose of Program: The purpose of the Disability and Rehabilitation Research Projects and Centers Program is to plan and conduct research, demonstration projects, training, and related activities, including international activities, to develop methods, procedures, and rehabilitation technology, that maximize the full inclusion and integration into society, employment, independent living, family support, and economic and social self-sufficiency of individuals with disabilities, especially individuals with the most severe disabilities, and to improve the effectiveness of services authorized under the Rehabilitation Act of 1973, as amended (Rehabilitation Act).

Disability and Rehabilitation Research Projects

The purpose of NIDRR's DRRPs, which are funded through the Disability and Rehabilitation Research Projects and Centers Program, are to improve the effectiveness of services authorized under the Rehabilitation Act of 1973, as amended, by developing methods, procedures, and rehabilitation technologies that advance a wide range of independent living and employment outcomes for individuals with disabilities, especially individuals with the most severe disabilities. DRRPs carry out one or more of the following types of activities, as specified and defined in 34 CFR 350.13 through 350.19: research, training, demonstration, development, dissemination, utilization, and technical assistance.

An applicant for assistance under this program must demonstrate in its application how it will address, in whole or in part, the needs of individuals with disabilities from minority backgrounds (34 CFR 350.40(a)). The approaches an applicant may take to meet this requirement are found in 34 CFR 350.40(b). Additional information on the DRRP program can be found at: *http://www.ed.gov/rschstat/research/pubs/res-program.html#DRRP.*

Program Authority: 29 U.S.C. 762(g) and 764(a).

Applicable Program Regulations: 34 CFR part 350.

Proposed Priority: This notice contains one proposed priority.

DRRP on Employment of Individuals With Disabilities

Background

Despite the enactment of legislation and the implementation of a variety of policy and program efforts at the Federal and State levels to improve employment outcomes for individuals with disabilities, the employment rate for individuals with disabilities remains substantially lower than the rate for those without disabilities. The economic downturn in recent years has resulted in still greater workforce disparities. In December 2011, 17.9 percent of persons with a disability age 16 years and older were employed, compared to 63.7 percent of persons without a disability (U.S. Department of Labor, 2012). Among persons 25 to 54 years of age during the recent recession, the unemployment rate of persons with a disability ranged from 2.0 to 2.3 times that of persons without a disability (Fogg, Harrington, McMahon, 2010). These differences in employment and unemployment rates exist across all socio-demographic groups. Additionally, the median earnings for persons with a disability who are employed are $19,500 per year as compared to $29,997 per year earned by persons without a disability (U.S. Census Bureau, 2011).

NIDRR has funded a wide range of disability research and development

projects on employment topics, including on the impact of government policies and programs on employment outcomes for individuals with disabilities; employer practices and workplace environments; individual characteristics that affect employment outcomes of individuals with disabilities; technology to support employment outcomes of individuals with disabilities; and vocational rehabilitation (VR) practice. NIDRR seeks to build on this research by supporting innovative and well-designed research and development projects that fall under one or more general employment topic areas and that focus on a specific stage of research (i.e., exploration, intervention development, intervention efficacy, and scale-up evaluation). This priority would require a project to focus its research or development activities on a general employment area or areas and, to the extent an applicant proposes to conduct research activities under the priority, require that the applicant identify the stage of the proposed research in its application. NIDRR hopes to increase competition and innovation by allowing applicants to specify the research topics under the broader areas of research. NIDRR also hopes to improve the rigor of the research it funds by asking applicants to identify and justify the stage of research being proposed and the methods appropriate to that stage. Through this priority, we would fund projects that are designed to identify, develop, test, and evaluate interventions, programs, technologies, and products that increase employment rates, hours of paid work, earnings and other compensation of individuals with disabilities; and improve job and career satisfaction, or other job-related outcomes of individuals with disabilities.

References

Fogg, N. P., Harrington, P. E., & McMahon, B. T. (2011). The underemployment of persons with disabilities during the Great Recession. *The Rehabilitation Professional, 19(1),* 3–10.

U.S. Census Bureau (2010) *American Community Survey: Table B18140.* Available from: *http://factfinder.census.gov*

U.S. Department of Labor (2012a). *Economic News Release: Table A–6. Employment status of the civilian population by sex, age, and disability status, not seasonally adjusted.* Retrieved from: *http://www.bls.gov/news.release/empsit.t06.htm*

U.S. Department of Labor (2012b). *Economic News Release: Table 1. Employment status of the civilian noninstitutionalized population by disability and selected characteristics.* Retrieved from: *http://www.bls.gov/news.release/disabl.t01.htm.*

Proposed Priority

The Assistant Secretary for Special Education and Rehabilitative Services proposes a priority for a Disability and Rehabilitation Research Project (DRRP) on Employment of Individuals with Disabilities. The DRRP must contribute to the outcomes of increased employment rates, hours of paid work, earnings and other compensation for individuals with disabilities as well as improved job and career satisfaction and other work-related outcomes for individuals with disabilities.

(a) To contribute to these outcomes, the DRRP must—

(1) Conduct research activities, development activities, or both, in one or more of the following priority areas:

(i) The impact of government policies and programs on employment outcomes for individuals with disabilities.

(ii) Employer practices and workplace environments that contribute to improved employment outcomes for individuals with disabilities.

(iii) Preparedness of individuals with disabilities to participate in the current and future workforce.

(iv) Technology (including the systems that develop, evaluate, and deliver the technology) that support improved employment outcomes of individuals with disabilities.

(v) Practices and policies that contribute to improved employment outcomes for transition-aged youth.

(vi) Vocational rehabilitation (VR) practices that result in improved employment outcomes for individuals with disabilities.

(2) If conducting research under paragraph (a)(1) of this priority, focus its research on a specific stage of research. For purposes of this priority, the stages of research are as follows:

(i) *Exploration.* Exploration means the stage of research that generates hypotheses or theories by conducting new and refined analyses of data, producing observational findings, and creating other sources of research-based information. This research stage may include identifying or describing the barriers to and facilitators of improved outcomes of individuals with disabilities, as well as identifying or describing existing practices, programs, or policies that are associated with important aspects of the lives of individuals with disabilities. Results achieved under this stage of research may inform the development of interventions or lead to evaluations of interventions or policies. The results of the exploration stage of research may also be used to inform decisions or priorities.

(ii) *Intervention Development.* Intervention Development means the stage of research that focuses on generating and testing interventions that have the potential to improve employment outcomes for individuals with disabilities. Intervention development involves determining the active components of possible interventions, developing measures that would be required to illustrate outcomes, specifying target populations, conducting field tests, and assessing the feasibility of conducting a well-designed interventions study. Results from this stage of research may be used to inform the design of a study to test the efficacy of an intervention.

(iii) *Intervention Efficacy.* Intervention efficacy means the stage of research during which a project evaluates and tests whether an intervention is feasible, practical, and has the potential to yield positive outcomes for individuals with disabilities. Efficacy research may assess the strength of the relationships between an intervention and outcomes, and may identify factors or individual characteristics that affect the relationship between the intervention and outcomes. Efficacy research can inform decisions about whether there is sufficient evidence to support ''scaling-up'' an intervention to other sites and contexts. This stage of research can include assessing the training needed for wide-scale implementation of the intervention, and approaches to evaluation of the intervention in real world applications.

(iv) *Scale-Up Evaluation.* Scale-up evaluation means the stage of research during which a project analyzes whether an intervention is effective in producing improved outcomes for individuals with disabilities when implemented in a real-world setting. During this stage of research, a project tests the outcomes of an evidence-based intervention in different settings. It examines the challenges to successful replication of the intervention, and the circumstances and activities that contribute to successful adoption of the intervention in real-world settings. This stage of research may also include well-designed studies of an intervention that has been widely adopted in practice, but that lacks a sufficient evidence-base to demonstrate its effectiveness.

(3) Conduct knowledge translation activities (i.e., training, technical assistance, utilization, dissemination) in order to facilitate stakeholder (e.g., individuals with disabilities, employers, policymakers, practitioners) use of the

interventions, programs, technologies, or products that resulted from the research activities, development activities, or both, conducted under paragraph (a)(1) of this priority;

(4) Involve key stakeholder groups in the activities conducted under paragraphs (a)(1) and (a)(2) of this priority in order to maximize the relevance and usability of the interventions, programs, technologies, or products to be developed or studied under this priority.

(b) In its application, an applicant must describe how its proposed project will meet this priority. In particular, the applicant must—

(1) Identify, in its application, the priority area or areas on which its proposed research or development activities will focus; and

(2) If conducting research under paragraph (a)(1) of this priority, identify and provide a rationale for the stage of research being proposed and the research methods associated with the stage.

Types of Priorities

When inviting applications for a competition using one or more priorities, we designate the type of each priority as absolute, competitive preference, or invitational through a notice in the **Federal Register**. The effect of each type of priority follows:

Absolute priority: Under an absolute priority, we consider only applications that meet the priority (34 CFR 75.105(c)(3)).

Competitive preference priority: Under a competitive preference priority, we give competitive preference to an application by (1) awarding additional points, depending on the extent to which the application meets the priority (34 CFR 75.105(c)(2)(i)); or (2) selecting an application that meets the priority over an application of comparable merit that does not meet the priority (34 CFR 75.105(c)(2)(ii)).

Invitational priority: Under an invitational priority, we are particularly interested in applications that meet the priority. However, we do not give an application that meets the priority a preference over other applications (34 CFR 75.105(c)(1)).

Final Priority

We will announce the final priority in a notice in the **Federal Register**. We will determine the final priority after considering responses to this notice and other information available to the Department. This notice does not preclude us from proposing additional priorities, requirements, definitions, or selection criteria, subject to meeting applicable rulemaking requirements.

Note: This notice does *not* solicit applications. In any year in which we choose to use this priority, we invite applications through a notice in the **Federal Register**.

Executive Orders 12866 and 13563

Regulatory Impact Analysis

Under Executive Order 12866, the Secretary must determine whether this regulatory action is ''significant'' and, therefore, subject to the requirements of the Executive order and subject to review by the Office of Management and Budget (OMB). Section 3(f) of Executive Order 12866 defines a ''significant regulatory action'' as an action likely to result in a rule that may—

(1) Have an annual effect on the economy of $100 million or more, or adversely affect a sector of the economy, productivity, competition, jobs, the environment, public health or safety, or State, local or Tribal governments or communities in a material way (also referred to as an ''economically significant'' rule);

(2) Create serious inconsistency or otherwise interfere with an action taken or planned by another agency;

(3) Materially alter the budgetary impacts of entitlement grants, user fees, or loan programs or the rights and obligations of recipients thereof; or

(4) Raise novel legal or policy issues arising out of legal mandates, the President's priorities, or the principles stated in the Executive order.

This proposed regulatory action is not a significant regulatory action subject to review by OMB under section 3(f) of Executive Order 12866.

We have also reviewed this regulatory action under Executive Order 13563, which supplements and explicitly reaffirms the principles, structures, and definitions governing regulatory review established in Executive Order 12866. To the extent permitted by law, Executive Order 13563 requires that an agency—

(1) Propose or adopt regulations only on a reasoned determination that their benefits justify their costs (recognizing that some benefits and costs are difficult to quantify);

(2) Tailor its regulations to impose the least burden on society, consistent with obtaining regulatory objectives and taking into account—among other things and to the extent practicable—the costs of cumulative regulations;

(3) In choosing among alternative regulatory approaches, select those approaches that maximize net benefits (including potential economic, environmental, public health and safety, and other advantages; distributive impacts; and equity);

(4) To the extent feasible, specify performance objectives, rather than the behavior or manner of compliance a regulated entity must adopt; and

(5) Identify and assess available alternatives to direct regulation, including economic incentives—such as user fees or marketable permits—to encourage the desired behavior, or provide information that enables the public to make choices.

Executive Order 13563 also requires an agency ''to use the best available techniques to quantify anticipated present and future benefits and costs as accurately as possible.'' The Office of Information and Regulatory Affairs of OMB has emphasized that these techniques may include ''identifying changing future compliance costs that might result from technological innovation or anticipated behavioral changes.''

We are taking this regulatory action only on a reasoned determination that its benefits justify its costs. In choosing among alternative regulatory approaches, we selected those approaches that maximize net benefits. Based on the analysis that follows, the Department believes that this proposed priority is consistent with the principles in Executive Order 13563.

We also have determined that this regulatory action would not unduly interfere with State, local, and Tribal governments in the exercise of their governmental functions.

In accordance with both Executive orders, the Department has assessed the potential costs and benefits of this regulatory action. The potential costs associated with this regulatory action are those resulting from statutory requirements and those we have determined as necessary for administering the Department's programs and activities.

The benefits of the Disability and Rehabilitation Research Projects and Centers Programs have been well established over the years in that similar projects have been completed successfully. This proposed priority would generate new knowledge through research and development. Another benefit of this proposed priority is that the establishment of new DRRPs would improve the lives of individuals with disabilities. The new DRRP would generate, disseminate, and promote the use of new information that would improve employment opportunities for individuals with disabilities.

Intergovernmental Review: This program is not subject to Executive

Order 12372 and the regulations in 34 CFR part 79.

Accessible Format: Individuals with disabilities can obtain this document in an accessible format (e.g., braille, large print, audiotape, or computer diskette) by contacting the Grants and Contracts Services Team, U.S. Department of Education, 400 Maryland Avenue SW., room 5075, PCP, Washington, DC 20202–2550. Telephone: (202) 245–7363. If you use a TDD or a TTY, call the FRS, toll free, at 1–800–877–8339.

Electronic Access to This Document: The official version of this document is the document published in the **Federal Register**. Free Internet access to the official edition of the **Federal Register** and the Code of Federal Regulations is available via the Federal Digital System at: *www.gpo.gov/fdsys*. At this site you can view this document, as well as all other documents of this Department published in the **Federal Register**, in text or Adobe Portable Document Format (PDF). To use PDF you must have Adobe Acrobat Reader, which is available free at the site. You may also access documents of the Department published in the **Federal Register** by using the article search feature at: *www.federalregister.gov*. Specifically, through the advanced search feature at this site, you can limit your search to documents published by the Department.

Dated: April 20, 2012.

Sue Swenson,

Deputy Assistant Secretary for Special Education and Rehabilitative Services, Delegated the Authority to Perform the Functions and Duties of Assistant Secretary for Special Education and Rehabilitative Services.

[FR Doc. 2012–10010 Filed 4–25–12; 8:45 am]

BILLING CODE 4000–01–P

DEPARTMENT OF EDUCATION

National Assessment Governing Board; Meeting

AGENCY: National Assessment Governing Board, U.S. Department of Education.

ACTION: Notice of open and closed meeting sessions.

SUMMARY: This notice sets forth the schedule and proposed agenda for the upcoming meeting of the National Assessment Governing Board (Board) and also describes the specific functions of the Board. Notice of this meeting is required under Section 10(a)(2) of the Federal Advisory Committee Act. This notice is issued to provide members of the general public with an opportunity to attend and/or provide comments. Individuals who will need special accommodations in order to attend the meeting (e.g. interpreting services, assistive listening devices, materials in alternative format) should notify Munira Mwalimu at 202–357–6938 or at *Munira.Mwalimu@ed.gov* no later than April 27, 2012. We will attempt to meet requests after this date but cannot guarantee availability of the requested accommodation. The meeting site is accessible to individuals with disabilities.

DATES: May 17–19, 2012.

Times

May 17

Committee Meetings

Assessment Development Committee (ADC): Closed Session: 12 p.m.–4:15 p.m.

Executive Committee: Open Session: 4:30 p.m.–5:30 p.m.; Closed Session: 5:30 p.m.–6 p.m.

May 18

Full Board: Open Session: 8:30 a.m.–9:45 a.m.; Closed Session: 12:30 p.m.–2 p.m.; Open Session: 2:15 p.m.–4:45 p.m.

Committee Meetings

Assessment Development Committee (ADC): Closed Session: 10 a.m.–12 p.m.; Open Session: 12 p.m.–12:30 p.m.

Reporting and Dissemination Committee (R&D): Open Session: 10 a.m.–12:30 p.m.

Committee on Standards, Design and Methodology (COSDAM): Open Session: 10 a.m.–11:20 a.m.; Closed Session: 11:25 a.m.–12:25 p.m.; Open Session: 12:25 p.m.–12:30 p.m.

May 19

Nominations Committee: Closed Session: 7:30 a.m.–8:15 a.m.

Full Board: Open Session: 8:30 a.m.–11:30 a.m.

Location: Marriott Plaza San Antonio, 555 South Alamo Street, San Antonio, TX 78205

FOR FURTHER INFORMATION CONTACT: Munira Mwalimu, Executive Officer, National Assessment Governing Board, 800 North Capitol Street NW., Suite 825, Washington, DC, 20002–4233, Telephone: (202) 357–6938.

SUPPLEMENTARY INFORMATION: The National Assessment Governing Board (Board) is established under section 412 of the National Education Statistics Act of 1994, as amended.

The Board is established to formulate policy guidelines for the National Assessment of Educational Progress (NAEP). The Board's responsibilities include the following: Selecting subject areas to be assessed, developing assessment frameworks and specifications, developing appropriate student achievement levels for each grade and subject tested, developing standards and procedures for interstate and national comparisons, developing guidelines for reporting and disseminating results, and releasing initial NAEP results to the public.

On May 17, 2012, two committee meetings are scheduled. The Assessment Development Committee (ADC) will meet in closed session from 12 p.m. to 4:15 p.m. to review secure computer-based tasks for the NAEP 2014 Technology and Engineering Literacy Assessment. During the closed session, ADC members will be provided specific test materials for review which are not yet available for release to the general public. Premature disclosure of these secure test items and materials would compromise the integrity and substantially impede implementation of the NAEP assessments and is therefore protected by exemption 9(B) of section 552b(c) of Title 5 of the United States Code.

On May 17, 2012, the Executive Committee will meet in open session from 4:30 p.m. to 5:30 p.m., and thereafter in closed session from 5:30 p.m. to 6 p.m. During the closed session, the Executive Committee will discuss a personnel matter. This portion of the meeting will be conducted in closed session because public discussion of this information would disclose information of a personal nature where disclosure would constitute an unwarranted invasion of personal privacy. As such, the discussions are protected by exemptions 2 and 6 of section 552b(c) of Title 5 of the United States Code.

On May 18, 2012, the full Board will meet in open session from 8:30 a.m. to 9:45 a.m., followed by a closed session from 12:30 p.m. to 2 p.m. and thereafter in open session from 2:15 p.m. to 4:45 p.m.

From 8:30 a.m. to 9:15 a.m. on May 18, the Board will review and approve the May 2012 meeting agenda and meeting minutes from the March 2012 Board meeting, followed by the Chairman's remarks and a welcome from San Antonio Board member Leticia van de Putte and a San Antonio policy maker. From 9:15 a.m. to 9:45 a.m. the Executive Director of the Governing Board will provide a report to the Board, followed by updates from the Commissioner of the National Center for Education Statistics (NCES) and the Director of the Institute of Education Sciences (IES). Following these

sessions, the Board will recess for Committee meetings from 10 a.m. to 12:30 p.m.

The Reporting and Dissemination Committee will meet in open session from 10 a.m. to 12:30 p.m. The Assessment Development Committee (ADC) will meet in closed session from 10 a.m. to 12 p.m. and in open session from 12 p.m. to 12:30 p.m. During the first closed session, the ADC will complete its review of secure Technology and Engineering Literacy (TEL) tasks at grade 8, which was begun during the closed session on Thursday, May 17. ADC members will be provided with specific test materials for review which are not yet available for release to the general public. Premature disclosure of these secure test items and materials would compromise the integrity and substantially impede implementation of the NAEP assessments and is therefore protected by exemption 9(B) of section 552b(c) of Title 5 of the United States Code.

The second item on the ADC closed meeting agenda for May 18 will be a briefing on the NAEP mathematics special studies: the Mathematics Computer-based Study (MCBS) and the Knowledge and Skills Appropriate (KaSA) special study. The briefing on these two special studies must be conducted in closed session because the Committee will be discussing secure test items and embargoed data for 8th grade students. During the closed session, ADC members will be provided specific test materials for review which are not yet available for release to the general public. Premature disclosure of these secure test items and materials would compromise the integrity and substantially impede implementation of the NAEP assessments and is therefore protected by exemption 9(B) of section 552b(c) of Title 5 of the United States Code. Following this closed session ADC members will convene in open session to discuss the Expert Panel Report on NAEP Background Variables.

The Committee on Standards, Design and Methodology will meet in open session from 10 a.m. to 11:20 a.m. and thereafter in closed session from 11:25 a.m. to 12:25 p.m. followed by an open session from 12:25 p.m. to 12:30 p.m. During the closed session, the Committee will receive and review preliminary findings from the Grade 8 Mathematics Multi-Stage Adaptive Field Trial and the Committee will receive and discuss secure data on the NAEP writing achievement levels at grades 8 and 12. The Committee will be provided with specific writing achievement level descriptions, cut scores, consequences data, and data on exemplar performances—secure assessment data and writing achievement levels results that have not been approved for release and therefore cannot be disclosed to the public at this time. Premature disclosure of these secure data would significantly impede implementation of the NAEP assessments and reporting, and is therefore protected by exemption 9(B) of section 552b(c) of Title 5 U.S.C.

On May 18, 2012 from 12:30 p.m. to 2 p.m. the full Board will meet in closed session to receive two briefings. During the first session, NCES and its contractor will provide a demonstration of the computer-based writing assessment system, including secure tasks to which students were asked to respond. The demonstration of assessment tasks will depict data not yet released to the public. Following this briefing, a demonstration of the software used for the achievement level setting process will be provided to the Board along with the results on the Writing Achievement Levels for Grades 8 and 12. Both presentations provided to the Board will include secure items and embargoed assessment data and results that cannot be discussed in an open meeting prior to their official release by the Governing Board and NCES. Premature disclosure of these results would significantly impede implementation of the NAEP assessment program, and is therefore protected by exemption 9(B) of section 552b(c) of Title 5 United States Code.

Following the closed session, the Board will meet in the following open sessions: From 2:15 p.m. to 2:45 p.m., the Board will receive an update on the NAEP 12th Grade Preparedness Commission from the Commission Chair. From 2:45 p.m. to 3:30 p.m., the Board will discuss plans for reporting NAEP 12th Grade Academic Preparedness. Following this session, from 3:45 p.m. to 4:45 p.m., the Board will receive a presentation on changing demographics in the U.S. student population, with implications for NAEP. The May 18, 2012 session of the Board meeting is scheduled to conclude at 4:45 p.m.

On May 19, 2012, the Nominations Committee will meet in closed session from 7:30 p.m. to 8:15 a.m. to discuss the slate of candidates for Board terms beginning October 1, 2012. The Committee discussions pertain solely to internal personnel rules and practices of an agency and will discuss information of a personal nature where disclosure would constitute an unwarranted invasion of personal privacy. As such, the discussions are protected by exemptions 2 and 6 of section 552b(c) of Title 5 of the United States Code.

On May 19, from 8:30 a.m. to 9 a.m. the full Board will receive a briefing on the NAEP 2011 Science Report Card at Grade 8. Thereafter, from 9 a.m. to 10 a.m., the Board will receive a briefing from NCES on the planning, procurement and budgeting process, as an *Inside NAEP* briefing series.

From 10:15 a.m. to 11:30 a.m. the Board will receive Committee reports, discuss cross cutting issues raised by committees, and take action on Committee recommendations. The May 19, 2012 meeting is scheduled to adjourn at 11:30 a.m.

Detailed minutes of the meeting, including summaries of the activities of the closed sessions and related matters that are informative to the public and consistent with the policy of section 5 U.S.C. 552b(c) will be available to the public within 14 days of the meeting. Records are kept of all Board proceedings and are available for public inspection at the U.S. Department of Education, National Assessment Governing Board, Suite #825, 800 North Capitol Street NW., Washington, DC, from 9:00 a.m. to 5:00 p.m. Eastern Time, Monday through Friday.

Electronic Access to This Document: You may view this document, as well as all other documents of this Department published in the **Federal Register**, in text or Adobe Portable Document Format (PDF) on the Internet at the following site: *http://www.ed.gov/news/fedregister/index.html.* To use PDF you must have Adobe Acrobat Reader, which is available free at this site. If you have questions about using PDF, call the U.S. Government Printing Office (GPO), toll free at 1–866–512–1800; or in the Washington, DC, area at (202) 512–0000.

Note: The official version of this document is the document published in the **Federal Register**. Free Internet access to the official edition of the **Federal Register** and the Code of Federal Regulations is available on GPO Access at: *www.gpoaccess.gov/nara/index.html.*

Dated: April 20, 2012.

Munira Mwalimu,

Executive Officer, National Assessment Governing Board (NAGB), U.S. Department of Education.

[FR Doc. 2012–10006 Filed 4–25–12; 8:45 am]

BILLING CODE 4000–01–P

DEPARTMENT OF ENERGY

Office of Energy Efficiency and Renewable Energy

Energy Conservation Program for Consumer Products: Representative Average Unit Costs of Energy

AGENCY: Office of Energy Efficiency and Renewable Energy, Department of Energy.

ACTION: Notice.

SUMMARY: In this notice, the U.S. Department of Energy (DOE) is forecasting the representative average unit costs of five residential energy sources for the year 2012 pursuant to the Energy Policy and Conservation Act. The five sources are electricity, natural gas, No. 2 heating oil, propane, and kerosene.

DATES: The representative average unit costs of energy contained in this notice will become effective May 29, 2012 and will remain in effect until further notice.

FOR FURTHER INFORMATION CONTACT: Mohammed Khan, U.S. Department of Energy, Office of Energy Efficiency and Renewable Energy Forrestal Building, Mail Station EE–2J 1000 Independence Avenue SW., Washington, DC 20585–0121, (202) 586–7892, *Mohammed.Khan@ee.doe.gov.* Francine Pinto, Esq. U.S. Department of Energy, Office of General Counsel Forrestal Building, Mail Station GC–72, 1000 Independence Avenue SW., Washington, DC 20585–0103, (202) 586–7432, *Francine.Pinto@hq.doe.gov.*

SUPPLEMENTARY INFORMATION: Section 323 of the Energy Policy and Conservation Act (Act) requires that DOE prescribe test procedures for the measurement of the estimated annual operating costs or other measures of energy consumption for certain consumer products specified in the Act. (42 U.S.C. 6293(b)(3)) These test procedures are found in Title 10 of the Code of Federal Regulations (CFR) part 430, subpart B.

Section 323(b)(3) of the Act requires that the estimated annual operating costs of a covered product be calculated from measurements of energy use in a representative average use cycle or period of use and from representative average unit costs of the energy needed to operate such product during such cycle. (42 U.S.C. 6293(b)(3)) The section further requires that DOE provide information to manufacturers regarding the representative average unit costs of energy. (42 U.S.C. 6293(b)(4)) This cost information should be used by manufacturers to meet their obligations under section 323(c) of the Act. Most notably, these costs are used to comply with Federal Trade Commission (FTC) requirements for labeling. Manufacturers are required to use the revised DOE representative average unit costs when the FTC publishes new ranges of comparability for specific covered products, 16 CFR part 305. Interested parties can also find information covering the FTC labeling requirements at *http://www.ftc.gov/appliances.*

DOE last published representative average unit costs of residential energy in a **Federal Register** notice entitled, ''Energy Conservation Program for Consumer Products: Representative Average Unit Costs of Energy'', dated March 10, 2011, 76 FR 13168.

May 29, 2012, the cost figures published in today's notice will become effective and supersede those cost figures published on March 10, 2011. The cost figures set forth in today's notice will be effective until further notice.

New Paragraph DOE's Energy Information Administration (EIA) has developed the 2012 representative average unit after-tax costs found in this notice. The representative average unit after-tax costs for electricity, natural gas, No. 2 heating oil, and propane are based on simulations used to produce the March, 2012, EIA *Short-Term Energy Outlook.* (EIA releases the *Outlook* monthly.) The representative average unit after-tax cost for kerosene is derived from its price relative to that of heating oil, based on the 2006–2010 averages for these two fuels. The source for these price data is the March, 2012, *Monthly Energy Review* DOE/EIA–0035(2012/02). The *Short-Term Energy Outlook* and the *Monthly Energy Review* are available on the EIA Web site at *http://www.eia.doe.gov.* Propane prices are econometric modeling projections based on historical Weekly Petroleum Status Report prices and Mont Belvieu spot prices. In prior **Federal Register** notices, the propane price was based on a previous 5-year average ratio with heating oil prices published in the Monthly Energy Review, but the propane price series was dropped in March 2011 due to budgetary issues. For more information on the two sources, contact the National Energy Information Center, Forrestal Building, EI–30, 1000 Independence Avenue SW., Washington, DC 20585, (202) 586–8800, email: *infoctr@eia.doe.gov.*

The 2012 representative average unit costs under section 323(b)(4) of the Act are set forth in Table 1, and will become effective May 29, 2012. They will remain in effect until further notice.

Dated: Issued in Washington, DC, on April 17, 2012.

David Danielson,

Assistant Secretary, Energy Efficiency and Renewable Energy.

TABLE 1—REPRESENTATIVE AVERAGE UNIT COSTS OF ENERGY FOR FIVE RESIDENTIAL ENERGY SOURCES (2012)

Type of energy	Per million Btu [1]	In commonly used terms	As required by test procedure
Electricity	$34.70	11.84¢/kWh [2 3]	$.1184/kWh
Natural Gas	10.35	$1.059/therm [4] or $10.59/MCF [5 6]	.00001035/Btu
No. 2 Heating Oil	29.12	$4.04/gallon [7]	.00002912/Btu
Propane	28.03	$2.56/gallon [8]	.00002803/Btu
Kerosene	32.22	$4.35/gallon [9]	.00003222/Btu

Sources: U.S. Energy Information Administration, *Short-Term Energy Outlook* (March, 2012) and *Monthly Energy Review* (March, 2012), except for propane.

[1] Btu stands for British thermal units.

[2] kWh stands for kilowatt hour.

[3] 1 kWh = 3,412 Btu.

[4] 1 therm = 100,000 Btu. Natural gas prices include taxes.

[5] MCF stands for 1,000 cubic feet.

[6] For the purposes of this table, one cubic foot of natural gas has an energy equivalence of 1,023 Btu.

[7] For the purposes of this table, one gallon of No. 2 heating oil has an energy equivalence of 138,690 Btu.

[8] For the purposes of this table, one gallon of liquid propane has an energy equivalence of 91,333 Btu.

[9] For the purposes of this table, one gallon of kerosene has an energy equivalence of 135,000 Btu.

[FR Doc. 2012–10058 Filed 4–25–12; 8:45 am]
BILLING CODE 6450–01–P

DEPARTMENT OF ENERGY

Federal Energy Regulatory Commission

[Docket No. ER10–956–003]

Vantage Wind Energy LLC; Order Accepting Updated Market Power Analysis and Providing Direction on Submitting Studies

Before Commissioners: Jon Wellinghoff, Chairman; Philip D. Moeller, John R. Norris, and Cheryl A. LaFleur.

1. In this order, the Commission accepts an updated market power analysis filed by Vantage Wind Energy LLC (Vantage Wind). As discussed below, the Commission concludes that Vantage Wind continues to satisfy the Commission's standards for market-based rate authority. Vantage Wind's next updated market power analysis must be filed according to the regional schedule adopted in Order No. 697.[1]

2. Additionally in this order, the Commission provides further direction on the performance of the indicative screens. In the future, when filing updated market power analyses with the Commission, filers that are load-serving entities should account for their remote generation and long-term firm purchases as described below.[2]

Background

3. On December 20, 2010, Vantage Wind filed an updated market power analysis in compliance with the regional reporting schedule adopted in Order No. 697 and pursuant to the Commission's order granting Vantage Wind authority to sell electric energy, capacity, and ancillary services at market-based rates.[3] In performing the indicative screens, Vantage Wind states that it relied on the updated market power analysis filed by Puget Sound Energy, Inc. (Puget).[4]

4. Vantage Wind owns and operates 90 megawatts (MW) of wind-powered generation facilities located near Kittias County, Washington.

5. Vantage Wind is an indirect, wholly-owned subsidiary of Vantage Wind Holdings LLC (Vantage Holdings). Vantage Wind states that Vantage Class B Holdings LLC (VCB Holdings), an indirect, wholly-owned subsidiary of Invenergy Investment Company LLC (Invenergy Investment), owns the Class B membership interests in Vantage Holdings and is the managing member. Vantage Wind states that Mehetia, Inc. (Mehetia) owns the Class A membership interests in Vantage Holdings. Vantage Wind represents that the Class A membership interests held by Mehetia are passive interests, consistent with the interests found to be passive in *AES Creative Resources, L.P.*[5]

6. Invenergy Investment is a wholly-owned subsidiary of Polsky Energy Investments LLC, which is indirectly owned and controlled by an individual. Vantage Wind states that through subsidiaries, Invenergy Investment is in the business of acquiring or developing, and owning and operating, electric generation facilities and associated interconnecting transmission facilities in the United States or abroad.

7. Vantage Wind states that other than their interests in Vantage Wind, none of Polsky Energy or Invenergy Investment and their respective affiliates own or control electric generation or transmission assets located within the Puget balancing authority area. Invenergy Investment indirectly owns controlling interests in two companies that own generation in the Bonneville Power Administration balancing authority area, which is first-tier to the Puget balancing authority area. The two companies are Grays Harbor Energy LLC, which owns a 650 MW gas-fired generation facility, and Willow Creek Energy LLC, which owns a 72 MW wind-powered generation facility. Vantage Wind states that this generation is accounted for in its market power analysis.

8. On June 17, 2011, the Commission issued an order accepting simultaneous transmission import limit (SIL) values for the Northwest region, including the Puget balancing authority area.[6] In accepting Puget's SIL values, Commission staff adjusted Puget's SIL values to account for long-term firm transmission reservations by using data reported by Puget to derive a ''net'' SIL value for the Puget balancing authority area. This ''net'' SIL value is the accepted SIL value for that balancing authority area as set forth in the *NW SIL Order.*[7] Puget's screens, however, used the higher, ''gross'' SIL values originally filed by Puget.[8] Additionally, Puget reported all of its remote generation resources and firm power purchases that Puget controls, as non-firm imports (Line D of the pivotal supplier screen and Line E of the market share screen).[9]

9. In Vantage Wind's December 20, 2010 Filing, Vantage Wind filed screens that utilized the ''gross'' SIL values that Puget used in its screens. Thus, Vantage Wind needed to revise its indicative screens so that its total imports are consistent with the Commission's accepted SIL values for the Puget balancing authority area.

10. On August 8, 2011, Vantage Wind filed revised pivotal supplier and wholesale share market screens as an amendment to its updated market power analysis to demonstrate that it continues to pass the indicative screens when the Commission-accepted SIL values for the Puget balancing authority area are applied.

Notices and Responsive Pleadings

11. Notice of Vantage Wind's December 20, 2010 and August 8, 2011 filings were published in the **Federal Register**, 75 FR 81,600 (2010) and 77 FR 2518 (2012), with interventions or protests due on or before February 18, 2011 and January 31, 2012. None was filed.

Discussion

Market-Based Rate Authorization

12. The Commission allows power sales at market-based rates if the seller and its affiliates do not have, or have adequately mitigated, horizontal and vertical market power.[10] As discussed

[1] *Market-Based Rates for Wholesale Sales of Electric Energy, Capacity and Ancillary Services by Public Utilities,* Order No. 697, FERC Stats. & Regs. ¶ 31,252, at PP 882–893, App. D, *clarified,* 121 FERC ¶ 61,260 (2007), at PP 9–10, App. D–1, *order on reh'g,* Order No. 697–A, FERC Stats. & Regs. ¶ 31,268, at Apps. D, D–1, and D–2, *clarified,* 124 FERC ¶ 61,055, *order on reh'g,* Order No. 697–B, FERC Stats. & Regs. ¶ 31,285 (2008), *order on reh'g,* Order No. 697–C, FERC Stats. & Regs. ¶ 31,291 (2009), at PP 47–48 (amending in part App. D–2), *order on reh'g,* Order No. 697–D, FERC Stats. & Regs. ¶ 31,305 (2010), *aff'd sub nom. Montana Consumer Counsel* v. *FERC,* 659 F.3d 910 (9th Cir. 2011).

[2] Load-serving entities use transmission facilities owned and maintained by a transmission owner to secure energy and transmission service to serve the electrical demand and energy requirements of their end-use customers.

[3] *See Vantage Wind Energy LLC,* Docket No. ER10–956–000 (May 26, 2010) (delegated letter order).

[4] *See* Puget Sound Energy, Inc. Filing, Docket No. ER99–845–020 (filed Jun. 29, 2010).

[5] 129 FERC ¶ 61,239 (2009).

[6] *Puget Sound Energy, Inc.,* 135 FERC ¶ 61,254 (2011) (*NW SIL Order*).

[7] *See NW SIL Order,* 135 FERC ¶ 61,254 at Appendix A.

[8] We note that Puget accounted for these resources as part of its imports, which artificially increased the SIL values reported in Puget's screens. Commission staff did not ask Puget to amend their screens, because Puget is a net purchaser and passes the screens in its balancing authority area irrespective of whether one applies the accepted net SIL values or the gross SIL values used by Puget.

[9] Specifically, we refer to Puget's Colstrip plant located in Montana and its firm power purchase agreements from Bonneville. This reporting by Puget did not affect Puget's screen results.

[10] Order No. 697, FERC Stats. & Regs. ¶ 31,252, at PP 62, 399, 408, 440.

below, we find that Vantage Wind satisfies the Commission's standards for market-based rate authority.

1. Horizontal Market Power

13. The Commission has adopted two indicative screens for assessing horizontal market power: the pivotal supplier screen and the wholesale market share screen.[11] The Commission has stated that passage of both screens establishes a rebuttable presumption that the applicant does not possess horizontal market power, while failure of either screen creates a rebuttable presumption that the applicant has horizontal market power.[12]

14. The Commission explained in Order No. 697 that in performing the indicative screens, uncommitted capacity is calculated by adding the total nameplate or seasonal capacity of generation owned or controlled through contract and firm purchases, less operating reserves, native load commitments and long-term firm sales.[13] The Commission further explained that uncommitted capacity from a seller's remote generation [14] should be included in the seller's total uncommitted amounts.[15]

15. Vantage Wind performed indicative screen analyses for the Puget balancing authority area. Vantage Wind states that it relied on the updated market power analysis filed by Puget to demonstrate that Vantage Wind passes the pivotal supplier screen and the wholesale market share screen in the Northwest region.[16]

16. In its updated market power analysis, Puget accounted for both its remote generation from its Colstrip plant located in Montana and its firm power purchase agreements from Bonneville as Imported Power (Line D of the market share screen and the pivotal supplier screen) rather than as Installed Capacity (Line A of the market share screen and the pivotal supplier screen) or a Long-term Firm Purchase (Line B of the market share screen and the pivotal supplier screen), respectively. Consequently, the total SIL shown in Puget's screens exceeded the net SIL value for the Puget balancing authority area as accepted by the Commission in the *NW SIL Order.* When Vantage Wind applied the Commission-approved SIL values to its analysis without making any other adjustments to Puget's screens, Vantage Wind appeared to fail the screens because Puget's capacity was underreported. In applying the Commission accepted SIL values, Vantage Wind effectively under-reported Puget's capacity because some of Puget's capacity was no longer reflected as imports due to the reduced SIL values. Further, when Vantage Wind accounted for Puget's remote generation resources as non-affiliate imports, Vantage Wind's resulting SIL values did not match the ''net'' SIL for the Puget balancing authority area that the Commission accepted in the *NW SIL Order.*

17. Thus, although Puget's incorrect allocation of both its remote generation and its firm power purchase agreements as Imported Power did not affect its screen results, it resulted in screen failures for a non-affiliate within the same region.

18. Vantage Wind states that in its revised indicative screens, it adjusted the amounts identified as Puget-controlled resources located outside the Puget system. Vantage Wind states that instead of including these amounts as a component of unaffiliated import capacity, it is reporting these amounts as non-affiliate Long-Term Firm Purchases (Line M of the market share screen and Line F of the pivotal supplier screen) in its revised indicative screens.

19. The Commission has reviewed Vantage Wind's revised pivotal supplier and wholesale market share screens for the Puget balancing authority area, as revised by Vantage Wind to account for the proper treatment of remote generation and Long-term Firm Purchases. Specifically, Vantage Wind accounts for Puget's remote generation as non-affiliated Long-term Firm Purchases (Line M of the market share screen and Line F of the pivotal supplier screen) in its revised indicative screens. We find that Vantage Wind passes the pivotal supplier screen and the wholesale market share screen in the Puget balancing authority area with market shares ranging from 8.6 to 15 percent across the four seasons.

20. Accordingly, we find that Vantage Wind satisfies the Commission's requirements for market-based rates regarding horizontal market power.

21. However, to prevent underreporting of load-serving entities' capacity in future updated market power analyses, and thereby affecting the screen results for non-affiliates within the same region, the Commission provides direction on how load-serving entities filing market power studies should account for both remote generation resources and long-term firm power purchases from generation resources located outside their home balancing authority area when performing the indicative screens. Specifically, load-serving entities should add their share of remote generation to Installed Capacity (Line A of the market share screen and the pivotal market share screen) and the amount of any long-term firm purchases into Long-term Firm Purchases (Line B of the market share screen and the pivotal supplier screen) of the indicative screens, when load-serving entities have long-term firm transmission rights associated with these resources. Load-serving entities should not include these amounts in Imported Power (Line D of the market share screen and the pivotal supplier screen) unless these resources do not have long-term firm reservations or rights to import that power.

2. Vertical Market Power

22. In cases where a public utility, or any of its affiliates, owns, operates, or controls transmission facilities, the Commission requires that there be a Commission-approved open access transmission tariff (OATT) on file or that the seller has received waiver of the OATT requirement before granting a seller market-based rate authorization.[17] Such waivers can be relied upon to satisfy the lack of transmission market power prong of the market-based rate criteria.[18] If a seller that previously received waiver of the OATT requirement seeks to continue to rely on that waiver to satisfy the vertical market power part of the analysis, it must make an affirmative statement that it previously received such a waiver, that such waiver remains appropriate, and the basis for that claim.[19]

23. Vantage Wind states that it does not own or control transmission facilities, other than the limited interconnection facilities that it owns as part of its generation project to deliver its power to its power purchasers. Vantage Wind further states that none of Polsky Energy, Invenergy Investment or their affiliates own or control transmission facilities in the United States other than limited interconnection facilities that Invenergy Investment's exempt wholesale generator subsidiaries (i) use to transmit their power from generation facilities that they own to their respective power

[11] *Id.* P 62.

[12] *Id.* PP 33, 62–63.

[13] *Id.* P 38.

[14] Remote generation refers to any generation capacity owned by a load-serving entity that is located outside of the load-serving entity's balancing authority area.

[15] Order No. 697, FERC Stats. & Regs. ¶ 31,252, at P 38.

[16] Puget's updated market power analysis was accepted on June 23, 2011. *See Puget Sound Energy, Inc.,* Docket No. ER99–845–020 (Jun. 23, 2011) (delegated letter order).

[17] Order No. 697, FERC Stats. & Regs. ¶ 31,252 at P 408.

[18] *Id.*

[19] *Id.*

purchasers or (ii) permit third parties to use but because of the discrete nature of such interconnection facilities have received waivers from the Commission of open access transmission requirements.[20] Vantage Wind represents that such waivers remain appropriate because the facts and circumstances upon which they were originally granted have not changed.

24. The Commission also considers a seller's ability to erect other barriers to entry as part of the vertical market power analysis.[21] The Commission requires a seller to provide a description of its ownership or control of, or affiliation with an entity that owns or controls, intrastate natural gas transportation, storage or distribution facilities; sites for generation capacity development; and physical coal supply sources and ownership of or control over who may access transportation of coal supplies (collectively, inputs to electric power production).[22] The Commission also requires sellers to make an affirmative statement that they have not erected barriers to entry into the relevant market and will not erect barriers to entry into the relevant market.[23] The Commission adopted a rebuttable presumption that the ownership or control of, or affiliation with any entity that owns or controls, inputs to electric power production does not allow a seller to raise entry barriers but will allow intervenors to demonstrate otherwise.[24]

25. With regard to other barriers to entry, Vantage Wind states that it does not, nor does Invenergy Investment, Polsky Energy or their affiliates, own or control in the United States: (i) Intrastate natural gas transportation, storage or distribution facilities or companies that own or control such facilities, or (ii) coal resources or transportation facilities or companies that own or control such things. Moreover, Vantage Wind states that it and its affiliates do not own or control sites located within the Puget balancing authority area that could be used to impose barriers to market entry by other wholesale power suppliers. Vantage Wind states that it owns or has land rights to the site for its generation facilities and that other affiliates of Invenergy Investment own, or may acquire in the future, certain property rights in land for the potential development of generation in places within in the United States including the Puget balancing authority area.

26. Finally, consistent with Order No. 697, Vantage Wind affirmatively states that it and its affiliates have not erected barriers to entry and will not erect barriers to entry in the relevant geographic market.

27. Based on Vantage Wind's representations, we find that Vantage Wind satisfies the Commission's requirements for market-based rate authority regarding vertical market power.

B. Reporting Requirements

28. Consistent with the procedures that the Commission adopted in Order No. 2001, an entity with market-based rates must electronically file an Electric Quarterly Report (EQR) with the Commission containing: (1) A summary of the contractual terms and conditions in every effective service agreement for market-based power sales; and (2) transaction information for effective short-term (less than one year) and long-term (one year or longer) market-based power sales during the most recent calendar quarter.[25] Public utilities must file EQRs no later than 30 days after the end of the reporting quarter.[26]

29. Additionally, Vantage Wind must timely report to the Commission any change in status that would reflect a departure from the characteristics the Commission relied upon in granting market-based rate authority.[27]

30. Vantage Wind must also file updated market power analyses for all regions in which it is designated as a Category 2 seller in compliance with the regional reporting schedule adopted in Order No. 697.[28] The Commission reserves the right to require an updated market power analysis at any time.[29]

The Commission orders:

(A) Vantage Wind's updated market power analysis is hereby accepted for filing, as discussed in the body of this order.

(B) Vantage Wind is hereby directed to file an updated market analysis for all regions in which it is designated as a Category 2 seller in compliance with the regional reporting schedule adopted in Order No. 697.

(C) The Secretary is hereby directed to publish a copy of this order in the **Federal Register**.

Issued April 23, 2012.

By the Commission.

Nathaniel J. Davis, Sr.,

Deputy Secretary.

[FR Doc. 2012–10085 Filed 4–25–12; 8:45 am]

BILLING CODE 6717–01–P

[20] Vantage Wind December 20 Filing at 10 (citing *Grand Ridge Energy, LLC,* 128 FERC ¶ 61,134 (2009), *Hardee Power Partners Limited,* 125 FERC ¶ 61,036 (2008), *Wolverine Creek Goshen Interconnection, LLC,* Docket No. ER06–267–000 (Jan. 13, 2006) (delegated letter order); *Hardee Power Partners Limited,* 114 FERC ¶ 61,131 (2006)).

[21] Order No. 697, FERC Stats. & Regs. ¶ 31,252 at P 440.

[22] *Id.* P 447; Order No. 697–A, FERC Stats. & Regs. ¶ 31,268 at P 176.

[23] Order No. 697, FERC Stats. & Regs. ¶ 31,252 at P 447.

[24] *Id.* P 446.

[25] *Revised Public Utility Filing Requirements,* Order No. 2001, FERC Stats. & Regs. ¶ 31,127, *reh'g denied,* Order No. 2001–A, 100 FERC ¶ 61,074, *reh'g denied,* Order No. 2001–B, 100 FERC ¶ 61,342, *order directing filing,* Order No. 2001–C, 101 FERC ¶ 61,314 (2002), *order directing filing,* Order No. 2001–D, 102 FERC ¶ 61,334 (2003). Attachments B and C of Order No. 2001 describe the required data sets for contractual and transaction information. Public utilities must submit EQRs to the Commission using the EQR Submission System Software, which may be downloaded from the Commission's Web site at *http://www.ferc.gov/docs-filing/eqr.asp.*

[26] The exact filing dates for these reports are prescribed in 18 CFR 35.10b (2011). Failure to file an EQR (without an appropriate request for extension), or failure to report an agreement in an EQR, may result in forfeiture of market-based rate authority, requiring filing of a new application for market-based rate authority if the applicant wishes to resume making sales at market-based rates.

[27] *Reporting Requirement for Changes in Status for Public Utilities with Market-Based Rate Authority,* Order No. 652, FERC Stats. & Regs. ¶ 31,175, *order on reh'g,* 111 FERC ¶ 61,413 (2005); 18 CFR 35.42(a) (2011).

[28] Order No. 697, FERC Stats. & Regs. ¶ 31,252 at P 882. *See Vantage Wind Energy, LLC,* Docket No. ER10–956–000, at 2 (May 26, 2010) (delegated letter order).

[29] *Id.* P 853.

DEPARTMENT OF ENERGY

Federal Energy Regulatory Commission

[Project No. 12778–004]

Fall Creek Hydro, LLC; Notice of Application Accepted for Filing, Soliciting Motions To Intervene and Protests, Ready for Environmental Analysis, and Soliciting Comments, Recommendations, Preliminary Terms and Conditions, and Preliminary Fishway Prescriptions

Take notice that the following hydroelectric application has been filed with the Commission and is available for public inspection.

a. *Type of Application:* Original Major License.

b. *Project No.:* 12778–004.

c. *Date filed:* February 28, 2011.

d. *Applicant:* Fall Creek Hydro, LLC.

e. *Name of Project:* Fall Creek Dam Hydroelectric Project.

f. *Location:* The proposed project would be constructed at the existing U.S. Army Corps of Engineer's (Corps) Fall Creek Dam located on Fall Creek near the towns of Springfield and Eugene in Lane County, Oregon. The project would occupy 6.53 acres of Federal lands managed by the Corps.

g. *Filed Pursuant to:* Federal Power Act 16 U.S.C. 791(a)–825(r).

h. *Applicant Contact:* Brent L. Smith, Chief Operating Officer; Symbiotics LLC; 371 Upper Terrace, Suite 2, Bend, OR 97702; Telephone (541) 330–8779.

i. *FERC Contact:* Lee Emery, Telephone (202) 502–8379 and email *lee.emery@ferc.gov.*

j. *Deadline for filing motions to intervene and protests, comments, recommendations, preliminary terms and conditions, and preliminary prescriptions:* 60 days from the issuance date of this notice; reply comments are due 105 days from the issuance date of this notice. Motions to intervene, protests, comments, recommendations, preliminary terms and conditions, and preliminary fishway prescriptions may be filed electronically via the Internet. See 18 CFR 385.2001(a)(1)(iii) and the instructions on the Commission's Web site *http://www.ferc.gov/docs-filing/efiling.asp.* Commenters can submit brief comments up to 6,000 characters, without prior registration, using the eComment system at *http://www.ferc.gov/docs-filing/ecomment.asp.* You must include your name and contact information at the end of your comments. For assistance, please contact FERC Online Support at *FERCOnlineSupport@ferc.gov* or toll free at 1–866–208–3676, or for TTY, (202) 502–8659. Although the Commission strongly encourages electronic filing, documents may also be paper-filed. To paper-file, mail an original and seven copies to: Kimberly D. Bose, Secretary, Federal Energy Regulatory Commission, 888 First Street NE., Washington, DC 20426.

The Commission's Rules of Practice require all intervenors filing documents with the Commission to serve a copy of that document on each person on the official service list for the project. Further, if an intervenor files comments or documents with the Commission relating to the merits of an issue that may affect the responsibilities of a particular resource agency, they must also serve a copy of the document on that resource agency.

k. This application has been accepted for filing and is now is ready for environmental analysis.

l. The proposed project would utilize the existing Corps' Fall Creek Dam and Fall Creek Reservoir, and would consist of the following new facilities: (1) Three water inlet structures with a total capacity of 625 cubic feet per second, built on the upstream face of the dam drawing water from elevations 720, 765 and 800 mean sea level; (2) a 32-foot-long, 22-foot-wide valve control structure for the three water inlets; (3) an 8-foot-diameter, approximately 570-foot-long penstock grouted to the existing south side concrete outlet structure; (4) a 10-foot-high, 5.5-foot-wide penstock isolation gate located at the downstream end of the penstock and maintaining hydraulic pressure in the penstock; (5) two 8-foot-diameter bifurcations located approximately 70 feet upstream of the penstock isolation gate; (6) two 110-foot-long, 8-foot-diameter penstocks; (7) two Eicher screens, one per penstock; (8) a 48.5-foot-long, 44-foot-wide concrete fish screen enclosure; (9) a 26-foot-long penstock convergence and trifurcation section leading to two Francis and one Kaplan turbine-generating units with a total installed capacity of 10 megawatts (MW); (10) a 75-foot-long, 60-foot-wide concrete powerhouse; (11) a network of pipes supplying water to an existing Corps fish collection facility during powerhouse operation or shutdown; (12) an approximately 100-foot-long, 64-foot-wide concrete tailrace channel equipped with picket barrier to prevent fish from accessing the turbine runners; (13) a 2,850-foot-long fish bypass system starting at the Eicher screens and consisting of (a) two 1,430-foot-long by 24-inch-diameter pipes each with 24 outlets discharging into an approximately 1,420-foot-long, 24-inch-wide and 24-inch-deep ''U'' shaped concrete open channel return chute; and (b) an approximately 33-foot-long, 23-foot-wide fish evaluation station located approximately 370 feet upstream from where the return chute discharges back into Fall Creek; (14) a 442-foot-long, 12.5 kilovolt buried transmission line connecting the powerhouse to an existing overhead transmission line which is part of the local grid; and (15) appurtenant facilities. The project would occupy 6.53 acres of Federal lands owned and managed by the Corps. The average annual generation is estimated to be 21,220 megawatt-hours.

m. A copy of the application is available for review at the Commission in the Public Reference Room or may be viewed on the Commission's Web site at *http://www.ferc.gov* using the ''eLibrary'' link. Enter the docket number excluding the last three digits in the docket number field to access the document. For assistance, contact FERC Online Support. A copy is also available for inspection and reproduction at the address in item h above.

Register online at *http://www.ferc.gov/docs-filing/esubscription.asp* to be notified via email of new filings and issuances related to this or other pending projects. For assistance, contact FERC Online Support.

n. Anyone may submit comments, a protest, or a motion to intervene in accordance with the requirements of Rules of Practice and Procedure, 18 CFR 385.210, .211, .and 214. In determining the appropriate action to take, the Commission will consider all protests or other comments filed, but only those who file a motion to intervene in accordance with the Commission's Rules may become a party to the proceeding. Any comments, protests, or motions to intervene must be received on or before the specified comment date for the particular application.

All filings must (1) bear in all capital letters the title ''PROTEST,'' ''MOTION TO INTERVENE,'' ''COMMENTS,'' ''REPLY COMMENTS,'' ''RECOMMENDATIONS,'' ''PRELIMINARY TERMS AND CONDITIONS,'' or ''PRELIMINARY FISHWAY PRESCRIPTIONS;'' (2) set forth in the heading the name of the applicant and the project number of the application to which the filing responds; (3) furnish the name, address, and telephone number of the person protesting or intervening; and (4) otherwise comply with the requirements of 18 CFR 385.2001 through 385.2005. All comments, recommendations, terms and conditions or prescriptions must set forth their evidentiary basis and otherwise comply with the requirements of 18 CFR 4.34(b). Agencies may obtain copies of the application directly from the applicant. A copy of any protest or motion to intervene must be served upon each representative of the applicant specified in the particular application. A copy of all other filings in reference to this application must be accompanied by proof of service on all persons listed in the service list prepared by the Commission in this proceeding, in accordance with 18 CFR 4.34(b) and 385.2010.

o. *Procedural Schedule:*

The application will be processed according to the following revised Hydro Licensing Schedule. Revisions to the schedule may be made as appropriate.

Milestone	Target date
Filing of recommendations, preliminary terms and conditions, and preliminary fishway prescriptions	June 2012.
Commission issues Draft EA	December 2012.

Milestone	Target date
Comments on Draft EA	January 2013.
Modified Terms and Conditions	March 2013.
Commission Issues Final EA	June 2013.

p. Final amendments to the application must be filed with the Commission no later than 30 days from the issuance date of this notice.

q. A license applicant must file no later than 60 days following the date of issuance of the notice of acceptance and ready for environmental analysis provided for in 5.22: (1) A copy of the water quality certification; (2) a copy of the request for certification, including proof of the date on which the certifying agency received the request; or (3) evidence of waiver of water quality certification.

r. Any qualified applicant desiring to file a competing application must submit to the Commission, on or before the specified intervention deadline date, a competing development application, or a notice of intent to file such an application. Submission of a timely notice of intent allows an interested person to file the competing development application no later than 120 days after the specified intervention deadline date. Applications for preliminary permits will not be accepted in response to this notice.

A notice of intent must specify the exact name, business address, and telephone number of the prospective applicant, and must include an unequivocal statement of intent to submit a development application. A notice of intent must be served on the applicant(s) named in this public notice.

Dated: April 19, 2012.

Kimberly D. Bose,

Secretary .

[FR Doc. 2012–10071 Filed 4–25–12; 8:45 am]

BILLING CODE 6717–01–P

DEPARTMENT OF ENERGY

Federal Energy Regulatory Commission

Combined Notice of Filings

Take notice that the Commission has received the following Natural Gas Pipeline Rate and Refund Report filings:

Filings Instituting Proceedings

Docket Numbers: RP12–604–000.
Applicants: Columbia Gas Transmission, LLC.
Description: TCRA 2012 to be effective 6/1/2012.
Filed Date: 4/13/12.
Accession Number: 20120413–5068.
Comments Due: 5 p.m. ET 4/25/12.

Docket Numbers: RP12–605–000.
Applicants: Columbia Gas Transmission, LLC.
Description: OTRA—April 2012 to be effective 6/1/2012.
Filed Date: 4/13/12.
Accession Number: 20120413–5120.
Comments Due: 5 p.m. ET 4/25/12.

Docket Numbers: RP12–606–000.
Applicants: El Paso Natural Gas Company.
Description: El Paso Natural Gas Company Request for Waiver Filing.
Filed Date: 4/16/12.
Accession Number: 20120416–5057.
Comments Due: 5 p.m. ET 4/30/12.

Docket Numbers: RP12–607–000.
Applicants: Anadarko Energy Services Company, Western Gas Resources Inc., Kerr McGee Energy Services Corporation, Kerr McGee (Nevada) LLC.
Description: Joint Petition of Kerr McGee Energy Services. Corporation, *et al.* for Temporary Waivers of Capacity Release Regulations and Policies, & Request for Shortened Comment Period & Expedited Treatment.
Filed Date: 4/12/12.
Accession Number: 20120412–5237.
Comments Due: 5 p.m. ET 4/24/12.

Docket Numbers: RP12–608–000.
Applicants: Natural Gas Pipeline Company of America.
Description: Tenaska Gas Negotiated Rate to be effective 4/16/2012.
Filed Date: 4/16/12.
Accession Number: 20120416–5162.
Comments Due: 5 p.m. ET 4/30/12.

Docket Numbers: RP12–609–000.
Applicants: Texas Gas Transmission, LLC.
Description: Authorization for Sale of Excess Storage Inventory filing to be effective 5/17/2012.
Filed Date: 4/16/12.
Accession Number: 20120416–5175.
Comments Due: 5 p.m. ET 4/30/12.

Docket Numbers: RP12–610–000.
Applicants: Columbia Gas Transmission, LLC.
Description: Columbia Gas Transmission, LLC submits tariff filing per 154.204: Negotiated Rate Service Agreement—South Jersey to be effective 5/17/2012.
Filed Date: 4/17/12.
Accession Number: 20120417–5076.
Comments Due: 5 p.m. ET 4/30/12.

Any person desiring to intervene or protest in any of the above proceedings must file in accordance with Rules 211 and 214 of the Commission's Regulations (18 CFR 385.211 and 385.214) on or before 5:00 p.m. Eastern time on the specified comment date. Protests may be considered, but intervention is necessary to become a party to the proceeding.

Filings in Existing Proceedings

Docket Numbers: RP11–1566–009.

Applicants: Tennessee Gas Pipeline Company, LLC.

Description: Rate Case 2011 Refund Report to be effective N/A.

Filed Date: 4/13/12.

Accession Number: 20120413–5140.

Comments Due: 5 p.m. ET 4/25/12.

Docket Numbers: RP12–458–002.

Applicants: Eastern Shore Natural Gas Company.

Description: Docket No. RP12–458 Compliance Filing to be effective 4/13/2012.

Filed Date: 4/16/12.

Accession Number: 20120416–5146.

Comments Due: 5 p.m. ET 4/30/12.

Any person desiring to protest in any the above proceedings must file in accordance with Rule 211 of the Commission's Regulations (18 CFR 385.211) on or before 5:00 p.m. Eastern time on the specified comment date.

The filings are accessible in the Commission's eLibrary system by clicking on the links or querying the docket number.

eFiling is encouraged. More detailed information relating to filing requirements, interventions, protests, and service can be found at: *http://www.ferc.gov/docs-filing/efiling/filing-req.pdf.* For other information, call (866) 208–3676 (toll free). For TTY, call (202) 502–8659.

Dated: April 17, 2012.

Nathaniel J. Davis, Sr.,

Deputy Secretary.

[FR Doc. 2012–10037 Filed 4–25–12; 8:45 am]

BILLING CODE 6717–01–P

DEPARTMENT OF ENERGY

Federal Energy Regulatory Commission

Notice of Commissioner and Staff Attendance at North American Electric Reliability Corporation Meetings

The Federal Energy Regulatory Commission hereby gives notice that members of the Commission and/or Commission staff may attend the following meetings:

North American Electric Reliability Corporation, Member Representatives Committee and Board of Trustees Meetings.

Westin Arlington Gateway, 801 North Glebe Road, Arlington, Virginia 22203.

May 8 (1 p.m.–5 p.m.) and 9 (8 a.m.–1 p.m.), 2012

Further information regarding these meetings may be found at: *http://www.nerc.com/calendar.php*.

The discussions at the meetings, which are open to the public, may address matters at issue in the following Commission proceedings:

Docket No. RC08–5, North American Electric Reliability Corporation.
Docket No. RC11–1, North American Electric Reliability Corporation.
Docket No. RC11–2, North American Electric Reliability Corporation.
Docket No. RC11–5, North American Electric Reliability Corporation.
Docket No. RC11–6, North American Electric Reliability Corporation.
Docket No. RR08–4, North American Electric Reliability Corporation.
Docket No. RR12–2, North American Electric Reliability Corporation.
Docket No. RR12–4, North American Electric Reliability Corporation.
Docket No. RR12–5, North American Electric Reliability Corporation.
Docket No. RD09–11, North American Electric Reliability Corporation.
Docket No. RD10–2, North American Electric Reliability Corporation.
Docket No. RD11–3, North American Electric Reliability Corporation.
Docket No. RD11–10, North American Electric Reliability Corporation.
Docket No. RD12–1, North American Electric Reliability Corporation.
Docket No. NP11–238, North American Electric Reliability Corporation.

For further information, please contact Jonathan First, 202–502–8529, or *jonathan.first@ferc.gov*.

Dated: April 19, 2012.

Kimberly D. Bose,

Secretary.

[FR Doc. 2012–10074 Filed 4–25–12; 8:45 am]

BILLING CODE 6717–01–P

DEPARTMENT OF ENERGY

Federal Energy Regulatory Commission

[Project No. 2558–031]

Central Vermont Public Service Corporation; Notice of Application for Amendment of License and Soliciting Comments, Motions To Intervene, and Protests

Take notice that the following hydroelectric application has been filed with the Commission and is available for public inspection:

a. *Application Type:* Amendment of License.

b. *Project No.:* P–2558–031.

c. *Date Filed:* April 9, 2012, and Supplemented on April 10, 2012.

d. *Applicant:* Central Vermont Public Service Corporation.

e. *Name of Project:* Otter Creek Hydroelectric Project.

f. *Location:* The existing project is located on Otter Creek in Addison and Rutland counties, Vermont. The project does not affect federal lands.

g. *Filed Pursuant to:* Federal Power Act, 16 U.S.C. 791(a)-825(r).

h. *Applicant Contact:* Mike Scarzello, Generation Asset Manager, Central Vermont Public Service Corporation, 77 Grove Street, Rutland, VT 05701; Telephone: (802) 747–5207.

i. *FERC Contact:* Any questions on this notice should be addressed to Kim Carter, Telephone (202) 502–6486 or *Kim.Carter@ferc.gov.*

j. *Deadline for filing comments and or motions:* Comments and or motions are due within 15 days of the date of this notice. If issued today, the date is Friday May 4, 2012.

Comments, protests, and interventions may be filed electronically via the Internet in lieu of paper. See 18 CFR 385.2001(a)(1)(iii) and the instructions on the Commission's Web site (*http://www.ferc.gov/docs-filing/efiling.asp*). Commenters can submit brief comments up to 6,000 characters, without prior registration, using the eComment system (*http://www.ferc.gov/docs-filing/ecomment.asp)* and must include name and contact information at the end of comments. The Commission strongly encourages electronic filings.

All documents (original and seven copies) filed by paper should be sent to: Secretary, Federal Energy Regulatory Commission, 888 First Street NE., Washington, DC 20426. Please include the project number (P–2558–031) on any comments or motions filed.

The Commission's Rules of Practice and Procedure require all interveners filing documents with the Commission to serve a copy of that document on each person whose name appears on the official service list for the project. Further, if an intervener files comments or documents with the Commission relating to the merits of an issue that may affect the responsibilities of a particular resource agency, they must also serve a copy of the document on that resource agency. A copy of any motion to intervene must also be served upon each representative of the Applicant specified in the particular application.

k. *Description of Application:* The existing Otter Creek Project consists of three developments: the Proctor, the Beldens, and the Huntington Falls development. The licensee proposes to construct a permanent access bridge at the Proctor Development to improve station access for operations, maintenance, repair, and safety.

l. *Locations of the Application:* A copy of the application is available for inspection and reproduction at the Commission's Public Reference Room, located at 888 First Street NE., Room 2A, Washington, DC 20426, or by calling (202) 502–8371. This filing may also be viewed on the Commission's Web site using the ''eLibrary'' link at *http://elibrary.ferc.gov/idmws/search/fercgensearch.asp*. Enter the docket number excluding the last three digits (P–2558) in the docket number field to access the document. You may also register online at *http://www.ferc.gov/docs-filing/esubscription.asp* to be notified via email of new filings and issuances related to this or other pending projects. For assistance, call 1–866–208–3676 or email *FERCOnlineSupport@ferc.gov,* for TTY, call (202) 502–8659. A copy is also available for inspection and reproduction at the address in item (h) above.

m. Individuals desiring to be included on the Commission's mailing list should so indicate by writing to the Secretary of the Commission.

n. *Comments, Protests, or Motions to Intervene:* Anyone may submit comments, a protest, or a motion to intervene in accordance with the requirements of Rules of Practice and Procedure, 18 CFR 385.210, .211, .214. In determining the appropriate action to take, the Commission will consider all protests or other comments filed, but only those who file a motion to intervene in accordance with the Commission's Rules may become a party to the proceeding. Any comments, protests, or motions to intervene must be received on or before the specified

comment date for the particular application.

o. Any filings must bear in all capital letters the title ''COMMENTS'', ''PROTEST'', or ''MOTION TO INTERVENE'', as applicable, and the Project Number of the particular application to which the filing refers.

p. *Agency Comments:* Federal, state, and local agencies are invited to file comments on the described application. A copy of the application may be obtained by agencies directly from the Applicant. If an agency does not file comments within the time specified for filing comments, it will be presumed to have no comments. One copy of an agency's comments must also be sent to the Applicant's representatives.

Dated: April 19, 2012.

Kimberly D. Bose,

Secretary.

[FR Doc. 2012–10075 Filed 4–25–12; 8:45 am]

BILLING CODE 6717–01–P

DEPARTMENT OF ENERGY

Federal Energy Regulatory Commission

[Project No. 13324–001]

Cedar Creek Hydro, LLC; Notice of Preliminary Permit Application Accepted for Filing and Soliciting Comments, Motions To Intervene, and Competing Applications

On April 2, 2011, Cedar Creek Hydro, LLC filed an application for a preliminary permit, pursuant to section 4(f) of the Federal Power Act (FPA), proposing to study the feasibility of the Cedar Creek Pumped Storage Project to be located in Briscoe, Armstrong, and Randall Counties, Texas. The sole purpose of a preliminary permit, if issued, is to grant the permit holder priority to file a license application during the permit term. A preliminary permit does not authorize the permit holder to perform any land-disturbing activities or otherwise enter upon lands or waters owned by others without the owners' express permission.

The proposed pumped storage project would consist of: (1) A 60-foot-high, 12,700-foot-long earth embankment upper dam; (2) an upper reservoir with a surface area of 283.0 acre and a storage capacity of 7,660 acre-feet; (3) a 28-foot-diameter, 3,720-foot-long steel penstock; (4) a powerhouse/pumping station containing three pump/generating units with a total capacity of 660.0 megawatts; (5) a 140-foot-high, 1,600-foot-long earth embankment lower dam; (6) a lower reservoir with a surface area of 151 acres and a storage capacity of 8,550 acre-feet; and (7) a 26-mile-long, 240 kilo-volt (KV) transmission line. The project would have an estimated average annual generation of 1,816,000 megawatt-hours and the project power would be sold.

Applicant Contact: Mr. Brent L. Smith, Symbiotics, LLC, 811 SW Naito Parkway Ste 120, Portland OR 97204. (503) 235–3424.

FERC Contact: Michael Spencer, *michael.spencer@ferc.gov,* (202) 502–6093.

Deadline for filing comments, motions to intervene, competing applications (without notices of intent), or notices of intent to file competing applications: 60 days from the issuance of this notice. Competing applications and notices of intent must meet the requirements of 18 CFR 4.36. Comments, motions to intervene, notices of intent, and competing applications may be filed electronically via the Internet. See 18 CFR 385.2001(a)(1)(iii) and the instructions on the Commission's Web site *http://www.ferc.gov/docs-filing/efiling.asp*. Commenters can submit brief comments up to 6,000 characters, without prior registration, using the eComment system at *http://www.ferc.gov/docs-filing/ecomment.asp*. You must include your name and contact information at the end of your comments. For assistance, please contact FERC Online Support at *FERCOnlineSupport@ferc.gov* or toll free at 1–866–208–3676, or for TTY, (202) 502–8659. Although the Commission strongly encourages electronic filing, documents may also be paper-filed. To paper-file, mail an original and seven copies to: Kimberly D. Bose, Secretary, Federal Energy Regulatory Commission, 888 First Street NE., Washington, DC 20426.

More information about this project, including a copy of the application, can be viewed or printed on the ''eLibrary'' link of Commission's Web site at *http://www.ferc.gov/docs-filing/elibrary.asp*. Enter the docket number (P–13324–001) in the docket number field to access the document. For assistance, contact FERC Online Support.

Dated: April 19, 2012.

Kimberly D. Bose,

Secretary.

[FR Doc. 2012–10069 Filed 4–25–12; 8:45 am]

BILLING CODE 6717–01–P

DEPARTMENT OF ENERGY

Federal Energy Regulatory Commission

[Project No. 12756–003—Louisiana; Red River Lock & Dam No. 3 Hydroelectric Project]

BOST3 Hydroelectric LLC; Notice of Proposed Restricted Service List for a Programmatic Agreement

Rule 2010 of the Federal Energy Regulatory Commission's (Commission) Rules of Practice and Procedure, 18 CFR section 385.2010, provides that, to eliminate unnecessary expense or improve administrative efficiency, the Secretary may establish a restricted service list for a particular phase or issue in a proceeding. The restricted service list should contain the names of persons on the service list who, in the judgment of the decisional authority establishing the list, are active participants with respect to the phase or issue in the proceeding for which the list is established.

The Commission staff is consulting with the Louisiana State Historic Preservation Officer (Louisiana SHPO) and the Advisory Council on Historic Preservation (Advisory Council) pursuant to the Advisory Council's regulations, 36 CFR part 800, implementing section 106 of the National Historic Preservation Act, as amended, (16 U.S.C. 470f), to prepare and execute a programmatic agreement for managing properties included in, or eligible for inclusion in, the National Register of Historic Places that could be affected by issuance of a license for the proposed Red River Lock & Dam No. 3 Hydroelectric Project No. 12756.

The programmatic agreement, when executed by the Commission and the Louisiana SHPO, would satisfy the Commission's section 106 responsibilities for all individual undertakings carried out in accordance with the license until the license expires or is terminated (36 CFR 800.13e). The Commission's responsibilities pursuant to section 106 for the proposed project would be fulfilled through the programmatic agreement, which staff proposes to draft in consultation with certain parties listed below.

BOST3 Hydroelectric LLC, as applicant for the proposed Red River Lock & Dam No. 3 Project No. 12756, is invited to participate in consultations to develop the programmatic agreement. For purposes of commenting on the programmatic agreement, staff proposes to restrict the service list for the aforementioned project as follows:

John Eddins, Advisory Council on Historic Preservation, The Old Post Office Building, Suite 803, 1100 Pennsylvania Avenue NW., Washington, DC 20004.	Douglas A. Spalding, Nelson Energy, LLC, Agent for BOST3 Hydroelectric LLC, 8441 Wayzata Blvd., Suite 101, Golden Valley, MN 55426.
Pam Breaux, SHPO, Louisiana Department of Culture, Recreation & Tourism, P.O. Box 44247, Baton Rouge, LA 70804.	Dr. Linda Langley, Coushatta Tribe of Louisiana, P.O. Box 818, Elton, LA 70532.
Rachel Watson or Representative, Louisiana Department of Culture, Recreation & Tourism, P.O. Box 44247, Baton Rouge, LA 70804.	Andrew Tomlinson or Representative, U.S. Army Corps of Engineers, 4155 Clay Street, Room 230, Vicksburg, MS 39183.

Any person on the official service list for the above-captioned proceeding may request inclusion on the restricted service list, or may request that a restricted service list not be established, by filing a motion to that effect within 15 days of this notice date. In a request for inclusion, please identify the reason or reasons why there is an interest to be included. Also please identify any concerns about historic properties, including traditional cultural properties. If historic properties are identified within the motion, please use a separate page, and label it Non-Public Information.

Any such motions may be filed electronically via the Internet. See 18 CFR 385.2001(a)(1)(iii) and the instructions on the Commission's Web site (*http://www.ferc.gov/docs-filing/ferconline.asp*) under the ''eFiling'' link. For a simpler method of submitting text only comments click on ''Quick Comment.'' For assistance, please contact FERC Online Support at *FERCOnlineSupport@ferc.gov;* call toll-free at (866) 208–3676; or, for TTY, contact (202) 502–8659. Although the Commission strongly encourages electronic filing, documents may also be paper-filed. To paper-file, mail an original and seven copies to: Kimberly D. Bose, Secretary, Federal Energy Regulatory Commission, 888 First Street NE., Washington, DC 20426. Please put the project number (P–12756–003) on the first page of the filing.

If no such motions are filed, the restricted service list will be effective at the end of the 15-day period. Otherwise, a further notice will be issued ruling on any motion or motions filed within the 15-day period.

Dated: April 19, 2012.

Kimberly D. Bose,

Secretary.

[FR Doc. 2012–10072 Filed 4–25–12; 8:45 am]

BILLING CODE 6717–01–P

DEPARTMENT OF ENERGY

Federal Energy Regulatory Commission

[Project No. 12758–004—Louisiana Red River Lock & Dam No. 5 Hydroelectric Project]

BOST5 Hydroelectric LLC; Notice of Proposed Restricted Service List for a Programmatic Agreement

Rule 2010 of the Federal Energy Regulatory Commission's (Commission) Rules of Practice and Procedure, 18 CFR 385.2010, provides that, to eliminate unnecessary expense or improve administrative efficiency, the Secretary may establish a restricted service list for a particular phase or issue in a proceeding. The restricted service list should contain the names of persons on the service list who, in the judgment of the decisional authority establishing the list, are active participants with respect to the phase or issue in the proceeding for which the list is established.

The Commission staff is consulting with the Louisiana State Historic Preservation Officer (Louisiana SHPO) and the Advisory Council on Historic Preservation (Advisory Council) pursuant to the Advisory Council's regulations, 36 CFR part 800, implementing section 106 of the National Historic Preservation Act, *as amended,* (16 U.S.C. 470f), to prepare and execute a programmatic agreement for managing properties included in, or eligible for inclusion in, the National Register of Historic Places that could be affected by issuance of a license for the proposed Red River Lock & Dam No. 5 Hydroelectric Project No. 12758.

The programmatic agreement, when executed by the Commission and the Louisiana SHPO, would satisfy the Commission's section 106 responsibilities for all individual undertakings carried out in accordance with the license until the license expires or is terminated (36 CFR 800.13e). The Commission's responsibilities pursuant to section 106 for the proposed project would be fulfilled through the programmatic agreement, which staff proposes to draft in consultation with certain parties listed below.

BOST5 Hydroelectric LLC, as applicant for the proposed Red River Lock & Dam No. 5 Project No. 12758, is invited to participate in consultations to develop the programmatic agreement. For purposes of commenting on the programmatic agreement, staff proposes to restrict the service list for the aforementioned project as follows:

John Eddins, Advisory Council on Historic, Preservation, The Old Post Office Building, Suite 803, 1100 Pennsylvania Avenue NW., Washington, DC 20004.	Douglas A. Spalding, Nelson Energy, LLC, Agent for BOST5 Hydroelectric LLC, 8441 Wayzata Blvd., Suite 101, Golden Valley, MN 55426.
Pam Breaux, SHPO, Louisiana Department of Culture, Recreation & Tourism, P.O. Box 44247, Baton Rouge, LA 70804.	Dr. Linda Langley, Coushatta Tribe of Louisiana, P.O. Box 818, Elton, LA 70532.
Rachel Watson or Representative, Louisiana Department of Culture, Recreation & Tourism, P.O. Box 44247, Baton Rouge, LA 70804.	Andrew Tomlinson or Representative, U.S. Army Corps of Engineers, 4155 Clay Street, Room 230, Vicksburg, MS 39183.

Any person on the official service list for the above-captioned proceeding may request inclusion on the restricted service list, or may request that a restricted service list not be established, by filing a motion to that effect within 15 days of this notice date. In a request for inclusion, please identify the reason or reasons why there is an interest to be included. Also please identify any concerns about historic properties, including traditional cultural properties. If historic properties are identified within the motion, please use a separate page, and label it NON-PUBLIC Information.

Any such motions may be filed electronically via the Internet. See 18 CFR 385.2001(a)(1)(iii) and the instructions on the Commission's Web site (*http://www.ferc.gov/docs-filing/ferconline.asp*) under the ''eFiling'' link. For a simpler method of submitting text only comments click on ''Quick Comment.'' For assistance, please contact FERC Online Support at *FERCOnlineSupport@ferc.gov;* call toll-free at (866) 208–3676; or, for TTY, contact (202) 502–8659. Although the Commission strongly encourages

electronic filing, documents may also be paper-filed. To paper-file, mail an original and seven copies to: Kimberly D. Bose, Secretary, Federal Energy Regulatory Commission, 888 First Street NE., Washington, DC 20426. Please put the project number (P–12758–004) on the first page of the filing.

If no such motions are filed, the restricted service list will be effective at the end of the 15-day period. Otherwise, a further notice will be issued ruling on any motion or motions filed within the 15-day period.

Dated: April 19, 2012.

Kimberly D. Bose,

Secretary.

[FR Doc. 2012–10070 Filed 4–25–12; 8:45 am]

BILLING CODE 6717–01–P

DEPARTMENT OF ENERGY

Federal Energy Regulatory Commission

[Project No. 12757–004—Louisiana]

Red River Lock & Dam No. 4 Hydroelectric Project; BOST4 Hydroelectric LLC; Notice of Proposed Restricted Service List for a Programmatic Agreement

Rule 2010 of the Federal Energy Regulatory Commission's (Commission) Rules of Practice and Procedure, 18 CFR 385.2010, provides that, to eliminate unnecessary expense or improve administrative efficiency, the Secretary may establish a restricted service list for a particular phase or issue in a proceeding. The restricted service list should contain the names of persons on the service list who, in the judgment of the decisional authority establishing the list, are active participants with respect to the phase or issue in the proceeding for which the list is established.

The Commission staff is consulting with the Louisiana State Historic Preservation Officer (Louisiana SHPO) and the Advisory Council on Historic Preservation (Advisory Council) pursuant to the Advisory Council's regulations, 36 CFR part 800, implementing section 106 of the National Historic Preservation Act, *as amended,* (16 U.S.C. 470f), to prepare and execute a programmatic agreement for managing properties included in, or eligible for inclusion in, the National Register of Historic Places that could be affected by issuance of a license for the proposed Red River Lock & Dam No. 4 Hydroelectric Project No. 12757.

The programmatic agreement, when executed by the Commission and the Louisiana SHPO, would satisfy the Commission's section 106 responsibilities for all individual undertakings carried out in accordance with the license until the license expires or is terminated (36 CFR 800.13e). The Commission's responsibilities pursuant to section 106 for the proposed project would be fulfilled through the programmatic agreement, which staff proposes to draft in consultation with certain parties listed below.

BOST4 Hydroelectric LLC, as applicant for the proposed Red River Lock & Dam No. 4 Project No. 12757, is invited to participate in consultations to develop the programmatic agreement. For purposes of commenting on the programmatic agreement, staff proposes to restrict the service list for the aforementioned project as follows:

John Eddins, Advisory Council on Historic Preservation, The Old Post Office Building, Suite 803, 1100 Pennsylvania Avenue NW., Washington, DC 20004.	Douglas A. Spalding, Nelson Energy, LLC, Agent for BOST4 Hydroelectric LLC, 8441 Wayzata Blvd., Suite 101, Golden Valley, MN 55426.
Pam Breaux, SHPO, Louisiana Department of Culture, Recreation & Tourism, P.O. Box 44247, Baton Rouge, LA 70804.	Dr. Linda Langley, Coushatta Tribe of Louisiana, P.O. Box 818, Elton, LA 70532.
Rachel Watson or Representative, Louisiana Department of Culture, Recreation & Tourism, P.O. Box 44247, Baton Rouge, LA 70804.	Andrew Tomlinson or Representative, U.S. Army Corps of Engineers, 4155 Clay Street, Room 230, Vicksburg, MS 39183.

Any person on the official service list for the above-captioned proceeding may request inclusion on the restricted service list, or may request that a restricted service list not be established, by filing a motion to that effect within 15 days of this notice date. In a request for inclusion, please identify the reason or reasons why there is an interest to be included. Also please identify any concerns about historic properties, including traditional cultural properties. If historic properties are identified within the motion, please use a separate page, and label it NON-PUBLIC Information.

Any such motions may be filed electronically via the Internet. See 18 CFR 385.2001(a)(1)(iii) and the instructions on the Commission's Web site (*http://www.ferc.gov/docs-filing/ferconline.asp*) under the ''eFiling'' link. For a simpler method of submitting text only comments click on ''Quick Comment.'' For assistance, please contact FERC Online Support at *FERCOnlineSupport@ferc.gov;* call toll-free at (866) 208–3676; or, for TTY, contact (202) 502–8659. Although the Commission strongly encourages electronic filing, documents may also be paper-filed. To paper-file, mail an original and seven copies to: Kimberly D. Bose, Secretary, Federal Energy Regulatory Commission, 888 First Street NE., Washington, DC 20426. Please put the project number (P–12757–004) on the first page of the filing.

If no such motions are filed, the restricted service list will be effective at the end of the 15-day period. Otherwise, a further notice will be issued ruling on any motion or motions filed within the 15-day period.

Dated: April 19, 2012.

Kimberly D. Bose,

Secretary.

[FR Doc. 2012–10073 Filed 4–25–12; 8:45 am]

BILLING CODE 6717–01–P

DEPARTMENT OF ENERGY

Federal Energy Regulatory Commission

[Docket No. AD12–10–000]

Reactive Power Resources; Supplemental Notice Requesting Comments

On April 17, 2012, Federal Energy Regulatory Commission staff (Staff) held a technical conference to examine whether the Commission should reconsider or modify the reactive power provisions of Order No. 661–A and examine what evidence could be developed under Order No. 661 to support a request to apply reactive power requirements more broadly than to individual wind generators during the interconnection study process.

At the conference, discussion items included: The technical and economic characteristics of different types of

reactive power resources, including synchronous and asynchronous generation resources, transmission resources and energy storage resources; the design options for and cost of installing reactive power equipment at the time of interconnection as well as retrofitting a resource with reactive power equipment; other means by which reactive power is currently secured such as through self-supply; and how a technology that is capable of providing reactive power but may not be subject to the generation interconnection process (e.g., FACTs) would be analyzed. The staff and participants discussed information on methods used to determine the reactive power requirements for a transmission system and how system impact and system planning studies take into account changes in technologies connected to the system.

Persons wishing to comment on these issues should submit written comments to the Commission no later than May 21, 2012.

Dated: April 20, 2012.

Nathaniel J. Davis, Sr.,

Deputy Secretary.

[FR Doc. 2012–10062 Filed 4–25–12; 8:45 am]

BILLING CODE 6717–01–P

DEPARTMENT OF ENERGY

Federal Energy Regulatory Commission

Meeting Related to the Transmission Planning Activities of the Southwest Power Pool, Inc.; Notice of Commission Staff Attendance

The Federal Energy Regulatory Commission hereby gives notice that members of the Commission's staff may attend the following meeting related to the transmission planning activities of the Southwest Power Pool, Inc. (SPP):

Strategic Planning Committee Task Force on Order 1000

April 25, 2012.

9 a.m.–3 p.m. Local Time.

The above-referenced meeting will be held at: OG&E Offices, 321 N. Harvey Avenue, Oklahoma City, OK 73101.

The above-referenced meeting is open to stakeholders.

Further information may be found at *www.spp.org.*

The discussions at the meetings described above may address matters at issue in the following proceedings:

Docket No. ER09–35–001, *Tallgrass Transmission, LLC.*

Docket No. ER09–36–001, *Prairie Wind Transmission, LLC.*

Docket No. ER09–548–001, *ITC Great Plains, LLC.*

Docket No. ER11–4105–000, *Southwest Power Pool, Inc.*

Docket No. EL11–34–001, *Midwest Independent Transmission System Operator, Inc.*

Docket No. ER11–3967–002, *Southwest Power Pool, Inc.*

Docket No. ER11–3967–003, *Southwest Power Pool, Inc.*

Docket No. ER12–1179–000, *Southwest Power Pool, Inc.*

For more information, contact Luciano Lima, Office of Energy Markets Regulation, Federal Energy Regulatory Commission at (202) 502–6210 or *luciano.lima@ferc.gov.*

Dated: April 20, 2012.

Nathaniel J. Davis, Sr.,

Deputy Secretary.

[FR Doc. 2012–10061 Filed 4–25–12; 8:45 am]

BILLING CODE 6717–01–P

DEPARTMENT OF ENERGY

Federal Energy Regulatory Commission

[Docket Nos. ER12–678–000; ER12–679–000]

Midwest Independent Transmission, System Operator, Inc.; Supplemental Notice of Technical Conference

As announced in the Notice of Technical Conference issued on April 4, 2012, and as required in the Commission's March 30, 2012 order in these dockets,[1] there will be a technical conference in these proceedings on May 15, 2012 at the Federal Energy Regulatory Commission, 888 First Street NE., Washington, DC, Room 3M–2A&B. The technical conference will be led by staff, and will be open for the public to attend. Attendees may register in advance at the following Web page: *https://www.ferc.gov/whats-new/registration/midwest-independent-5–15–12-form.asp.* Advance registration is not required, but is encouraged. Parties attending in person should still allow time to pass through building security procedures before the 9:00 a.m. start time of the conference.

The conference will not be webcast, but will be accessible via telephone. Parties wishing to participate by phone should fill out the registration form and check the box indicating that they wish to participate by conference call, and do so no later than 5:00 p.m. (Eastern Time) on Wednesday, May 9. Parties selecting this option will receive a confirmation email containing a dial-in number and a password before the conference. To the extent possible, individuals calling from the same location share a single telephone line.

FERC conferences are accessible under section 508 of the Rehabilitation Act of 1973. For accessibility accommodations please send an email to *accessibility@ferc.gov* or call toll free 866–208–3372 (voice) or 202–208–1659 (TTY), or send a FAX to 202–208–2106 with the required accommodations.

For further information regarding this conference, contact Stephen Pointer at *stephen.pointer@ferc.gov* or 202–502–8761, Adam Pollock at *adam.pollock@ferc.gov* or 202–502–8458, or Katherine Waldbauer at *katherine.waldbauer@ferc.gov* or 202–502–8232.

I. Questions to be Addressed Prior to Technical Conference. The Midwest Independent Transmission System Operator, Inc. (MISO) and/or Potomac Economics, Inc., MISO's Independent Market Monitor (IMM), are requested to file written responses to each of the questions below by Thursday, May 10, 2012, so that the responses may be discussed at the technical conferences.

1. Provide monthly information (from 2009 forward) on how many units were committed for VLR and the percentage of those units that were committed on transmission lines of less than 100 kV. Provide information on where in the MISO region these VLR units were committed. Does MISO expect VLR commitments in the future, and if so, where? Please explain.

2. How many VLR units (from 2009 forward) were economically dispatched?

3. With regard to the IMM's testimony in Docket No. ER12–678 at ¶ 15–22,[2] for the period from January 2010 to September 2011:

a. Were VLR units economically dispatched during any of these hours? Provide data on the number of hours VLR units were economically dispatched.

b. Did these units have headroom? If so, how many MWs?

4. MISO states that ''[i]n principle, voltage issues would be modeled using thermal constraints as a proxy in the commitment and dispatch'' [3] and ''[i]n fact, these commitments are made per operating procedures and guidelines regardless of expected or actual deviation volumes.'' [4]

a. Please provide the Operating Procedures and guidelines.

[1] *Midwest Independent Transmission System Operator, Inc.,* 138 FERC ¶ 61,235 (2012).

[2] Docket No. ER12–678–000 Filing, Tab E, Affidavit of David B. Patton.

[3] Analysis of Market Results at 1.

[4] *Id.* at 8.

b. Please identify all Business Practice Manuals that are relevant to Voltage and Local Reliability commitments.

5. The IMM explains that the proposed mitigation thresholds in section 64.1.3 are intended to address inflexible physical parameters for VLR units that can increase Revenue Sufficiency Guarantee payments.[5]

a. The proposed mitigation thresholds for identifying uneconomic production in sections 64.1.3.a.i(a), (b) and (c) apply to all resources, not only to VLRs. Explain in detail why each threshold is appropriate for all resources, including VLRs.

b. Neither the MISO submittal nor the IMM's testimony addresses the proposed threshold in section 64.1.3.a.i(a) of an incremental energy offer price for a resource that is less than 50 percent of the applicable Reference Level. Provide a justification for this threshold.

c. With regard to proposed section 64.1.3.a.i(c), please explain why the existing thresholds for identifying economic withholding in sections 64.1.2.a.v and 64.1.2.a.vi should also be used to identify uneconomic production.

6. Table 1 of the *Analysis of Market Results*[6] indicates that it represents real-time Revenue Sufficiency Guarantee costs.

a. Were all costs incurred in real time?

b. If not, what costs were incurred in the day-ahead markets?

7. Referencing the IMM's testimony in Docket No. ER12–678–000 at ¶ 17–19,[7] please explain the following.

a. How does the IMM determine the "* * * available offline resources that MISO could have committed to replace the capacity provided by the local commitments and identified the least-cost resource that MISO would likely have committed."

b. Please describe all elements of the calculation of the avoided Day-Ahead and Real-Time Revenue Sufficiency Guarantee Credits that would have been paid to Resources that may have been committed to meet the Capacity needs in the absence of the Voltage and Local Reliability Commitments, as specified in proposed section 40.3.3.xviii(3).

c. Why did the IMM base market-wide share on avoided Revenue Sufficiency Guarantee *costs,* rather than avoided MW?

* * * * *

II. Questions to Be Discussed at the Conference. The conference will consist of three sessions, as detailed below. For each session, a representative of MISO and a representative of the IMM should be prepared to make opening statements that address the questions below. After statements by the MISO and IMM representatives, Commission staff will ask questions; as time permits, other attendees (including telephone participants) may also ask questions.

Session 1: Voltage and Local Reliability (VLR) Commitments (Docket Nos. ER12–678–000 and ER12–679–000) (9 a.m.–11 a.m.)

8. MISO concludes that "[a] significant increase in the Real-Time [Revenue Sufficiency Guarantee] Make Whole Payments associated with Voltage and Local Reliability Commitments has occurred, starting in early 2010. The increase has been evident and sustained through November 2011 based on recurring transmission issues at specific locations in the MISO footprint."[8] Discuss the transmission reliability issues that have been occurring and what changed in 2010 such that VLR commitments were not needed in 2009 but were required in 2010. In the discussion, please indicate the extent to which the increase in Revenue Sufficiency Guarantee costs can be attributed to increased frequency of VLR commitments for specific units or to an increased number of different units committed for VLR.

9. How are voltage constraints modeled in the Security Constrained Unit Commitment (SCUC) and Security Constrained Economic Dispatch (SCED)? For voltage constraints that are not modeled in the SCUC and SCED, why aren't they included? What models or other tools aside from the SCUC and SCED does MISO use to make VLR commitments?

10. Explain how VLR units are committed and when they are committed in the operating and planning cycle. For all responses, provide objective criteria to the extent possible.

a. Please explain when and how VLR requirements are determined.

b. Are VLR commitments made for a specific MW amount, the total capacity of the generation unit, or on another basis? Please explain.

c. Do MISO and the IMM coordinate their VLR determinations, or do they make those determinations separately?

11. MISO states that "VLR Commitments may be issued at various points in the sequence of administering the [Reliability Assessment Commitment (RAC)] process, depending on when the needed requirements are known."[9] Explain this statement, and describe what information MISO is relying on to indicate that VLRs are required.

a. As part of the RAC process, explain each of the roles for the following tools in determining the needs for resources committed for VLR: Forward Reliability Assessment Commitment, Intra-day Reliability Assessment Commitment, and Look Ahead Commitment.

b. Does MISO consider a VLR commitment several days before the operating day to be part of a RAC process? Please explain.

12. Are market participants informed that their units are VLR commitments when committed? If not, when are they informed? Are VLR units designated as such prior to when their offers are submitted? Describe the VLR designation process. Does MISO change a unit's VLR designation after the commitment is made? Is there a "final" designation after the fact (during the settlement accounting process)?

13. Wisconsin Electric Power Company (WEPCO) argues that certain resource commitments should be exempt from the definition of VLR commitments, as follows: "Resource commitments that, absent an Operating Guide to address [VLR] requirements, would have resulted from a [SCUC] in the Day-Ahead Energy and Operating Reserve Market or any [RAC], shall not be designated in this category."[10]

a. Does WEPCO's proposed exclusion of SCUC commitments accurately depict how VLRs are committed? Please explain.

b. Can units committed based on economics in the SCUC and SCED processes be classified as VLR commitments? If yes, provide examples.

c. Can VLR units be declassified and become economic-only units? Please explain response.

d. Is it possible for MISO to incorporate local reliability issues in the SCUC or SCED processes? Please explain.

Session 2: Cost Allocation (Docket No. ER12–678–000) (11:30 a.m.–1:30 p.m.)

14. MISO states that "it does not anticipate any significant instances of pseudo-tied load modeling throughout the footprint that would exacerbate or

[5] Docket No. ER12–679–000 Filing, Tab D, Affidavit of David B. Patton at ¶¶ 22–25.

[6] Analysis of Market Results.

[7] *Id.*

[8] *Analysis of Market Results—Constraint Management Commitments,* attached to both the Docket No. ER12–678–000 filing and the Docket No. ER12–679–000 filing as Tab C (Analysis of Market Results) at 7–8.

[9] MISO Answer, Docket No. ER12–678–000, at 7.

[10] WEPCO Protest, Docket No. ER12–678–000, at 4–5.

result in cost shifts.'' [11] On what basis does MISO make that claim? Has MISO performed any studies to draw that conclusion? If so, please explain the results of the study.

15. Could MISO include voltage management as a constraint in an SCED/SCUC model that would allow for cost allocation in the same way that the constraint management charge is derived?

16. Please explain any objections MISO may have with regard to allowing Local Balancing Authority (LBA) Area participation in studies that result in costs being allocated to those LBAs.

17. Referencing the transmittal letter in Docket No. ER12–678–000 at 11, indicate objective criteria MISO would use that would form the basis for a broader allocation beyond the LBA Area.

18. Referencing the discussion in the transmittal letter in Docket No. ER12–678–000 at 15 of ''Commercially Significant'' voltage and local reliability issues, explain all the criteria that MISO will use to determine if a VLR is commercially significant.

Session 3: Mitigation (Docket No. ER12–679–000) (2 p.m.–4 p.m.)

19. The IMM's testimony describes voltage support commitments and reasons for those commitments, stating that ''local reliability and voltage support needs generally pertain to a very limited geographic area where the resources available to satisfy the reliability needs are owned by a very small number of suppliers, often only a single supplier.'' [12] How will the IMM determine which units are VLR commitments? How will the IMM monitor for units committed for VLR and for economics (and which mitigation thresholds will apply)?

20. To what extent do MISO and/or the IMM expect VLR mitigation to stem increasing Revenue Sufficiency Guarantee costs?

21. Explain the interplay between VLR mitigation and existing mitigation measures within Broad Constrained Areas (BCAs) and Narrow Constrained Areas (NCAs). Could a resource be mitigated under both sets of mitigation thresholds? If so, under what circumstances?

22. Please describe how MISO will determine reference levels for units committed for VLR. Given the specific market power concerns associated with VLRs, is it appropriate to use historical offer information to determine their initial reference levels?

Conference Conclusion: Next Steps (4 p.m.–4:30 p.m.)

Staff will conclude the conference and outline next steps.

Dated: April 20, 2012.

Nathaniel J. Davis, Sr.,

Deputy Secretary.

[FR Doc. 2012–10064 Filed 4–25–12; 8:45 am]

BILLING CODE 6717–01–P

[11] MISO Answer in Docket No. ER12–678–000 at 9.

[12] Docket No. ER12–679–000 Filing, Tab D, Affidavit of David B. Patton at ¶ 10.

DEPARTMENT OF ENERGY

Federal Energy Regulatory Commission

[Docket No. AD12–13–000]

Staff Technical Conference on Geomagnetic Disturbances to the Bulk-Power System; Technical Conference Agenda

As announced in the Notice of Technical Conference issued on April 6, 2012, the Commission Staff will hold a technical conference on Monday, April 30, 2012, from 11:00 a.m. to 4:00 p.m. to discuss issues related to the reliability of the Bulk-Power System as affected by geomagnetic disturbances. The conference will explore the risks and impacts from geomagnetically induced currents to transformers and other equipment on the Bulk-Power System, as well as, options for addressing or mitigating the risks and impacts. The agenda for this conference is attached. Commission members will participate in this conference. All interested persons are invited to attend.

The Commission will be accepting written comments regarding the matters discussed at this technical conference. Any person or entity wishing to submit written comments regarding the matters discussed at the conference should submit such comments in Docket No. AD12–13–000, on or before May 21, 2012.

Information on this event will be posted on the Calendar of Events on the Commission's Web site, *www.ferc.gov,* prior to the event. The conference will be transcribed. Transcripts will be available immediately for a fee from Ace Reporting Company (202–347–3700 or 1–800–336–6646). A free webcast of this event is also available through *www.ferc.gov.* Anyone with Internet access who desires to listen to this event can do so by navigating to *www.ferc.gov's* Calendar of Events and locating this event in the Calendar. The event will contain a link to the webcast. The Capitol Connection provides technical support for webcasts and offers the option of listening to the meeting via phone-bridge for a fee. If you have any questions, visit *www.CapitolConnection.org* or call 703–993–3100.

Commission conferences are accessible under section 508 of the Rehabilitation Act of 1973. For accessibility accommodations, please send an email to *accessibility@ferc.gov* or call toll free 1–866–208–3372 (voice) or 202–208–8659 (TTY), or send a FAX to 202–208–2106 with the required accommodations.

For more information about this conference, please contact: Sarah McKinley, Office of External Affairs, Federal Energy Regulatory Commission, 888 First Street NE., Washington, DC 20426, (202) 502–8368, *sarah.mckinley@ferc.gov.*

Dated: April 20, 2012.

Nathaniel J. Davis, Sr.,

Deputy Secretary.

[FR Doc. 2012–10063 Filed 4–25–12; 8:45 am]

BILLING CODE 6717–01–P

ENVIRONMENTAL PROTECTION AGENCY

[EPA–HQ–OAR–2003–0162; FRL–9665–9]

Agency Information Collection Activities; Proposed Collection; Comment Request; Regional Haze Regulations; EPA ICR No. 1813.08

AGENCY: Environmental Protection Agency (EPA).

ACTION: Notice.

SUMMARY: In compliance with the Paperwork Reduction Act (PRA) (44 U.S.C. 3501 *et seq.*), this document announces that the EPA is planning to submit a request to renew an existing approved Information Collection Request (ICR) to the Office of Management and Budget (OMB). This ICR is scheduled to expire on October 31, 2012. Before submitting the ICR to OMB for review and approval, the EPA is soliciting comments on specific aspects of the proposed information collection as described below.

DATES: *Comments.* Written comments must be received on or before June 25, 2012.

ADDRESSES: Submit your comments, identified by Docket ID No. EPA–HQ–OAR–2003–0162, by one of the following methods:

- *www.regulations.gov:* follow the on-line instructions for submitting comments.

• *Email: a-and-r-docket@epa.gov.* Attention Docket ID No. EPA–HQ–OAR–2003–0162.

• *Fax:* (202) 566–9744. Attention Docket ID No. EPA–HQ–OAR–2003–0162.

• *Mail:* EPA Docket Center, EPA West (Air Docket), Attention Docket ID No. EPA–HQ–OAR–2003–0162, Environmental Protection Agency, Mailcode: 2822T, 1200 Pennsylvania Ave. NW., Washington, DC 20460.

• *Hand Delivery:* EPA Docket Center (Air Docket), Attention Docket ID No. EPA–HQ–OAR–2003–0162, Environmental Protection Agency, 1301 Constitution Avenue NW., Room 3334, Washington, DC. Such deliveries are only accepted during the Docket's normal hours of operation, and special arrangements should be made for deliveries of boxed information.

Instructions: Direct your comments to Docket ID No. EPA–HQ–OAR–2003–0162. The EPA's policy is that all comments received will be included in the public docket without change and may be made available online at *www.regulations.gov,* including any personal information provided, unless the comment includes information claimed to be Confidential Business Information (CBI) or other information whose disclosure is restricted by statute. Do not submit information that you consider to be CBI or otherwise protected through *www.regulations.gov* or email. The *www.regulations.gov* Web site is an ''anonymous access'' system, which means the EPA will not know your identity or contact information unless you provide it in the body of your comment. If you send an email comment directly to the EPA without going through *www.regulations.gov,* your email address will be automatically captured and included as part of the comment that is placed in the public docket and made available on the Internet. If you submit an electronic comment, the EPA recommends that you include your name and other contact information in the body of your comment and with any disk or CD-ROM you submit. If the EPA cannot read your comment due to technical difficulties and cannot contact you for clarification, the EPA may not be able to consider your comment. Electronic files should avoid the use of special characters and any form of encryption, and be free of any defects or viruses. For additional information about the EPA's public docket, visit the EPA Docket Center homepage at *http://www.epa.gov/epahome/dockets.htm.*

Docket: All documents in the docket are listed in the *www.regulations.gov* index. Although listed in the index, some information is not publicly available, e.g., CBI or other information whose disclosure is restricted by statute. Certain other material, such as copyrighted material, will be publicly available only in hard copy. Publicly available docket materials are available either electronically in *www.regulations.gov* or in hard copy at the EPA Docket Center EPA/DC, EPA West, Room 3334, 1301 Constitution Ave. NW., Washington, DC. The Public Reading Room is open from 8:30 a.m. to 4:30 p.m., Monday through Friday, excluding legal holidays. The telephone number for the Public Reading Room is (202) 566–1744, and the telephone number for the EPA Docket Center is (202) 566–1742.

FOR FURTHER INFORMATION CONTACT: Ms. Gobeail McKinley (919) 541–5246, *mckinley.gobeail@epa.gov,* Office of Air Quality Planning and Standards, Air Quality Policy Division, Mail Code C539–04, Research Triangle Park, NC 27711.

SUPPLEMENTARY INFORMATION:

How can I access the docket and/or submit comments?

The EPA has established a public docket for this ICR under Docket ID No. EPA–HQ–OAR–2003–0162, which is available for online viewing at *www.regulations.gov,* or in-person viewing at the Air Docket in the EPA Docket Center (EPA/DC), EPA West, Room 3334, 1301 Constitution Ave. NW., Washington, DC. The EPA/DC Public Reading Room is open from 8:30 a.m. to 4:30 p.m., Monday through Friday, excluding legal holidays. The telephone number for the Reading Room is (202) 566–1744, and the telephone number for the Air Docket is (202) 566–1742.

Use *www.regulations.gov* to obtain a copy of the draft collection of information, submit or view public comments, access the index listing of the contents of the docket, and to access those documents in the public docket that are available electronically. Once in the system, select ''search,'' then key in the docket ID number identified in this document.

What information is the EPA particularly interested in?

Pursuant to section 3506(c)(2)(A) of the PRA, the EPA specifically solicits comments and information to enable it to:

(i) Evaluate whether the proposed collection of information is necessary for the proper performance of the functions of the agency, including whether the information will have practical utility;

(ii) evaluate the accuracy of the agency's estimate of the burden of the proposed collection of information, including the validity of the methodology and assumptions used; (iii) enhance the quality, utility and clarity of the information to be collected; and (iv) minimize the burden of the collection of information on those who are to respond, including through the use of appropriate automated electronic, mechanical or other technological collection techniques or other forms of information technology, e.g., permitting electronic submission of responses. In particular, the EPA is requesting comments from very small businesses (those that employ less than 25) on examples of specific additional efforts that the EPA could make to reduce the paperwork burden for very small businesses affected by this collection.

What should I consider when I prepare my comments for the EPA?

You may find the following suggestions helpful for preparing your comments:

1. Explain your views as clearly as possible and provide specific examples.
2. Describe any assumptions that you used.
3. Provide copies of any technical information and/or data you used that support your views.
4. If you estimate potential burden or costs, explain how you arrived at the estimate that you provide.
5. Offer alternative ways to improve the collection activity.
6. Make sure to submit your comments by the deadline identified under DATES.
7. To ensure proper receipt by the EPA, be sure to identify the docket ID number assigned to this action in the subject line on the first page of your response. You may also provide the name, date, and **Federal Register** citation.

What information collection activity or ICR does this apply to?

Affected entities: Entities potentially affected by this action are state, local and tribal air quality agencies, regional planning organizations and facilities potentially regulated under the regional haze rule.

Title: Regional Haze Regulations; EPA ICR No. 1813.08, OMB Control No. 2060–0412.

ICR numbers: EPA ICR No. 1813.08, OMB Control No. 2060–0412.

ICR status: This ICR is currently scheduled to expire on October 31,

2012. An agency may not conduct or sponsor, and a person is not required to respond to, a collection of information, unless it displays a currently valid OMB control number. The OMB control numbers for the EPA's regulations in title 40 of the CFR, after appearing in the **Federal Register** when approved, are listed in 40 CFR part 9, and are displayed either by publication in the **Federal Register** or by other appropriate means, such as on the related collection instrument or form, if applicable. The display of OMB control numbers in certain EPA regulations is consolidated in 40 CFR part 9.

Abstract: This ICR is for activities related to the implementation of the EPA's regional haze regulations, for the time period between October 31, 2012, and October 30, 2015, and renews the previous ICR. The regional haze rule codified at 40 CFR parts 308 and 309, as authorized by sections 169A and 169B of the Clean Air Act (CAA), requires states to develop implementation plans to protect visibility in 156 federally-protected Class I areas. Tribes may choose to develop implementation plans. For this time period, states will be revising their implementation plans to comply with the regulations. An agency may not conduct or sponsor, and a person is not required to respond to, a collection of information request unless it displays a currently valid OMB control number. The OMB control numbers for the EPA's regulations in 40 CFR are listed in 40 CFR part 9 and 48 CFR chapter 15.

Burden Statement: The annual public reporting and recordkeeping burden for this collection of information is estimated to average 320 hours per response. Burden means the total time, effort or financial resources expended by persons to generate, maintain, retain, or disclose or provide information to or for a federal agency. This includes the time needed to review instructions; develop, acquire, install, and utilize technology and systems for the purposes of collecting, validating and verifying information, processing and maintaining information and disclosing and providing information; adjust the existing ways to comply with any previously applicable instructions and requirements which have subsequently changed; train personnel to be able to respond to a collection of information; search data sources; complete and review the collection of information; and transmit or otherwise disclose the information.

The ICR provides a detailed explanation of the agency's estimate, which is only briefly summarized here:

Estimated total number of potential respondents: 34.

Frequency of response: Every 5 years.

Estimated total average number of responses for each respondent: 1.

Estimated total annual burden hours: 4,080 hours.

Estimated total annual costs: $198,084. This includes an estimated burden cost of $198,084 and an estimated cost of $0 for capital investment or maintenance and operational costs.

Are there changes in the estimates from the last approval?

There are revisions to the cost estimates since the last renewal of this ICR (August 26, 2009; 74 FR 43118). The last collection request anticipated the program progressing from the planning stages to implementation. The last renewal estimate was 31,841 hours and $2,563,000. The current estimate represents a decrease in hours and in the costs. The change in burden is a program adjustment, reflecting changes in labor rates, changes in the activities conducted due to the normal progression of the program, and the fact that the aggregate initial regional haze SIPs and best available retrofit technology (BART) determinations will have been acted upon by the EPA by November 2012 and the states will be shifting their focus to development of interim progress reports required by the regional haze rule.

What is the next step in the process for this ICR?

The EPA will consider the comments received and amend the ICR as appropriate. The final ICR package will then be submitted to OMB for review and approval pursuant to 5 CFR 1320.12. At that time, the EPA will issue another **Federal Register** notice pursuant to 5 CFR 1320.5(a)(1)(iv) to announce the submission of the ICR to OMB and the opportunity to submit additional comments to OMB. If you have any questions about this ICR or the approval process, please contact the technical person listed under **FOR FURTHER INFORMATION CONTACT.**

Dated: April 20, 2012.

Mary E. Henigin,

Acting Director, Office of Air Quality Planning and Standards.

[FR Doc. 2012–10101 Filed 4–25–12; 8:45 am]

BILLING CODE 6560–50–P

FEDERAL COMMUNICATIONS COMMISSION

Radio Broadcasting Services; AM or FM Proposals to Change the Community of License

AGENCY: Federal Communications Commission.

ACTION: Notice.

SUMMARY: The following applicants filed AM or FM proposals to change the community of license: DIVINE WORD COMMUNICATIONS, Station WDLG, Facility ID 86328, BPED–20120313AEE, From THOMASVILLE, AL, To GROVE HILL; FIFE COMMUNICATION COMPANY, L.C., Station KCVM, Facility ID 17227, BPH–20120327ALB, From HUDSON, IA, To EVANSDALE; HOG RADIO, INC., Station KLYR–FM, Facility ID 22057, BPH–20120208ADK, From CLARKSVILLE, AR, To COAL HILL; JACKSON COUNTY BROADCASTING, INC., Station WKOV–FM, Facility ID 29691, BPH–20120326ALC, From FRAZEYSBURG, OH, To OAK HILL; S AND H BROADCASTING L.L.C., Station KRSX–FM, Facility ID 2316, BPH–20120316ABT, From TWENTYNINE PALMS, CA, To NORTH SHORE; VERMONT BROADCAST ASSOCIATES, INC, Station NEW, Facility ID 189498, BNPH–20110630AEC, From ALBANY, VT, To IRASBURG.

DATES: The agency must receive comments on or before June 25, 2012.

ADDRESSES: Federal Communications Commission, 445 Twelfth Street SW., Washington, DC 20554.

FOR FURTHER INFORMATION CONTACT: Tung Bui, 202–418–2700.

SUPPLEMENTARY INFORMATION: The full text of these applications is available for inspection and copying during normal business hours in the Commission's Reference Center, 445 12th Street SW., Washington, DC 20554 or electronically via the Media Bureau's Consolidated Data Base System, *http://svartifoss2.fcc.gov/prod/cdbs/pubacc/prod/cdbs_pa.htm.* A copy of this application may also be purchased from the Commission's duplicating contractor, Best Copy and Printing, Inc., 445 12th Street SW., Room CY–B402, Washington, DC 20554, telephone 1–800–378–3160 or *www.BCPIWEB.com.*

Federal Communications Commission.

James D. Bradshaw,

Deputy Chief, Audio Division, Media Bureau.

[FR Doc. 2012–10131 Filed 4–25–12; 8:45 am]

BILLING CODE 6712–01–P

FEDERAL DEPOSIT INSURANCE CORPORATION

Sunshine Act Meeting

Pursuant to the provisions of the ''Government in the Sunshine Act'' (5 U.S.C. 552b), notice is hereby given that at 2:22 p.m. on Monday, April 23, 2012, the Board of Directors of the Federal Deposit Insurance Corporation met in closed session to consider matters related to the Corporation's supervision, corporate, and resolution activities.

In calling the meeting, the Board determined, on motion of Director Thomas M. Hoenig (Appointive), seconded by Director Richard Cordray (Director, Consumer Financial Protection Bureau), concurred in by Director Thomas J. Curry (Comptroller of the Currency), Director Jeremiah O. Norton (Appointive), and Acting Chairman Martin J. Gruenberg, that Corporation business required its consideration of the matters which were to be the subject of this meeting on less than seven days' notice to the public; that no earlier notice of the meeting was practicable; that the public interest did not require consideration of the matters in a meeting open to public observation; and that the matters could be considered in a closed meeting by authority of subsections (c)(4), (c)(6), (c)(8), (c)(9)(A)(ii), (c)(9)(B), and (c)(10) of the ''Government in the Sunshine Act'' (5 U.S.C. 552b(c)(4), (c)(6), (c)(8), (c)(9)(A)(ii), (c)(9)(B), and (c)(10)).

The meeting was held in the Board Room of the FDIC Building located at 550 17th Street NW., Washington, DC.

Federal Deposit Insurance Corporation.

Dated: April 23, 2012.

Robert E. Feldman,

Executive Secretary.

[FR Doc. 2012–10161 Filed 4–24–12; 11:15 am]

BILLING CODE P

DEPARTMENT OF HEALTH AND HUMAN SERVICES

Agency for Healthcare Research and Quality

Agency Information Collection Activities: Proposed Collection; Comment Request

AGENCY: Agency for Healthcare Research and Quality, HHS.

ACTION: Notice.

SUMMARY: This notice announces the intention of the Agency for Healthcare Research and Quality (AHRQ) to request that the Office of Management and Budget (OMB) approve the proposed information collection project: ''System Redesign for Value in Safety Net Hospitals and Delivery Systems.'' In accordance with the Paperwork Reduction Act, 44 U.S.C. 3501–3521, AHRQ invites the public to comment on this proposed information collection.

This proposed information collection was previously published in the **Federal Register** on February 24th, 2012 and allowed 60 days for public comment. No substantive comments were received. The purpose of this notice is to allow an additional 30 days for public comment.

DATES: Comments on this notice must be received by May 29, 2012.

ADDRESSES: Written comments should be submitted to: AHRQ's OMB Desk Officer by fax at (202) 395–6974 (attention: AHRQ's desk officer) or by email at *OIRA_submission@omb.eop.gov* (attention: AHRQ's desk officer).

Copies of the proposed collection plans, data collection instruments, and specific details on the estimated burden can be obtained from the AHRQ Reports Clearance Officer.

FOR FURTHER INFORMATION CONTACT: Doris Lefkowitz, AHRQ Reports Clearance Officer, (301) 427–1477, or by email at *doris.lefkowitz@AHRQ.hhs.gov.*

SUPPLEMENTARY INFORMATION:

Proposed Project

System Redesign for Value in Safety Net Hospitals and Delivery Systems

This proposed project is a case study of 8 safety net (SN) hospitals. The goals of the project are to:

(1) Identify the tools and resources needed to facilitate system redesign in SN hospitals and;

(2) Identify any barriers to adoption of these in SN environments, or any gaps that exist in the available resources.

These goals are consistent with The National Strategy for Quality Improvement in Health Care, published by the U.S. Department of Health and Human Services in March 2011, which articulated a need for progress toward three goals: (1) Better Care, (2) Healthy People/Healthy Communities and (3) Affordable Care. SN hospitals and systems are critical to achieving all three. SN hospitals are hospitals and health systems which provide a significant portion of their services to vulnerable, uninsured and Medicare patients. While all hospitals face challenges in improving both quality and operating efficiency, safety net (SN) hospitals face even greater challenges due to growing demand for their services and decreasing funding opportunities.

Despite these challenging environmental factors, some SN hospitals and health systems have achieved financial stability and implemented broad-ranging efforts to improve the quality of care they deliver. However, while there have been successful quality improvement initiatives for SN providers, most initiatives aim at specific units within large organizations. The improvements introduced into these units have not often been spread throughout the organization. Additionally, these improvements often are hard to sustain. ''System redesign'' refers to aligned and synergistic quality improvement efforts across a hospital or health system leading to multidimensional changes in the management or delivery of care or strategic alignment of system changes with an organization's business strategy. System redesign, if done successfully, will allow SN providers to improve their operations, remain afloat financially, and provide better quality healthcare to vulnerable and underserved populations. Resources, as defined here, may include learning materials and environments developed to support, advance, and facilitate quality improvement efforts (e.g., tools, guides, webinars, learning collaboratives, training programs). The term ''resources'' should not be interpreted here to imply financial support for routine staffing or operations of Safety Net systems, but may include quality improvement grants, fellowships, collaboratives and trainings.

Many tools, guides, and other learning environments have been developed to support the implementation of individual quality improvement initiatives. However, the development of resources to support alignment across multiple domains of a health system has been limited. Furthermore, the applicability of existing resources to SN environments is unknown.

This study is being conducted by AHRQ through its contractor, Boston University, pursuant to AHRQ's statutory authority to conduct and support research on healthcare and on systems for the delivery of such care, including activities with respect to the quality, effectiveness, efficiency, appropriateness and value of healthcare services and with respect to quality measurement and improvement. 42 U.S.C. 299a(a)(1) and (2).

Method of Collection

To achieve the goals of this project the following activities and data collections will be implemented:

(1) In-person interviews will be conducted during a 2-day site visit with senior medical center leaders, clinical managers and staff involved in system redesign from each of the 8 participating SN hospitals. These interviews may be conducted one-on-one or in small groups, depending upon the participants' availability. The purpose of these interviews is to learn directly from hospital leadership and staff about the resources they have used to support and guide their system redesign efforts and what, if any, gaps there are in the resources available to them.

(2) Collection of documentation from each SN hospital. The documentation to be collected includes annual reports, performance dashboards, reports on specific system redesign and quality improvement projects and hospital newsletters. The purpose of this task is to provide supplementary information about the hospitals and their quality improvement and system redesign efforts. Collection of documentation from participating hospitals will allow the research team to collect additional information that is readily available in hospital documents, but may not be known or readily accessible to interview subjects during their interviews.

The findings and recommendations developed from this project will be disseminated through AHRQ networks and through our partnership with the National Association of Public Hospitals and its membership group to ensure that findings are reaching administrators at public and SN hospitals directly. In addition, findings will be published in peer-reviewed and trade literature so that they will be available to a wide range of SN delivery system managers and clinicians for use in hospitals and healthcare systems. Findings will be presented as illustrative of the issues facing SN hospitals engaging in system redesign—rather than as representing the quantity or distribution of conditions and practices within SN hospitals. All presentations and publications will state the limitations of our case-study methodology.

Estimated Annual Respondent Burden

Exhibit 1 shows the estimated annualized burden hours for the respondents' time to participate in this data collection. In-person interviews will be conducted with a total of 160 hospital staff members (20 from each of the 8 participating SN hospitals) and will last about 1 hour. The collection of documentation will require 2 hours work from 1 staff member at each hospital. The total burden is estimated to be 176 hours.

EXHIBIT 1—ANNUALIZED BURDEN HOURS

Data collection	Number of respondents	Number of responses per respondent	Hours per response	Total burden hours
In-person interviews	160	1	1	160
Collection of documentation	8	1	2	16
Total	168	n/a	n/a	176

Exhibit 2 shows the estimated annualized cost burden associated with the respondents' time to provide the requested data. The total cost burden is estimated to be $9,242 annually.

EXHIBIT 2—ESTIMATED ANNUALIZED BURDEN COST

Data collection	Number of respondents	Total burden hours	Average hourly wage rate *	Total cost burden
In-person interviews	160	160	$56.23	$8,997
Collection of documentation	8	16	15.30	245
Total	168	176	na	9,242

* The hourly rate of $56.23 is an average of the clinical personnel hourly wage of $91.10 for physicians and $32.56 for registered nurses, and the administrative personnel hourly wage of $45.03 for medical and health services managers. The hourly rate of $15.30 is median hourly rate for medical administrative support staff. All hourly rates are based on median salary data provided by the U.S. Bureau of Labor Statistics.

Estimated Annual Costs to the Federal Government

Exhibit 3 shows the estimated total and annualized cost to the government for this 3 year project. The total cost is $499,877 and includes the cost of data collection, data analysis, reporting, and government oversight of the contract. The costs associated with data collection activities are not all for the primary data collection of the case studies but include the review of existing literature and other available data sources.

TABLE 3—COST TO THE FEDERAL GOVERNMENT

Cost component	Total cost	Annualized cost
Project Development	$49,161	$16,377
Data Collection Activities	123,478	41,159
Data Processing and Analysis	109,433	36,478
Publication of Results	81,836	27,279
Project Management	18,438	6,146
Overhead	117,531	39,177

TABLE 3—COST TO THE FEDERAL GOVERNMENT—Continued

Cost component	Total cost	Annualized cost
Government Oversight	13,710	4,570
Total	499,877	166,626

Request for Comments

In accordance with the Paperwork Reduction Act, comments on AHRQ's information collection are requested with regard to any of the following: (a) Whether the proposed collection of information is necessary for the proper performance of AHRQ healthcare research and healthcare information dissemination functions, including whether the information will have practical utility; (b) the accuracy of AHRQ's estimate of burden (including hours and costs) of the proposed collection(s) of information; (c) ways to enhance the quality, utility, and clarity of the information to be collected; and (d) ways to minimize the burden of the collection of information upon the respondents, including the use of automated collection techniques or other forms of information technology.

Comments submitted in response to this notice will be summarized and included in the Agency's subsequent request for OMB approval of the proposed information collection. All comments will become a matter of public record.

Dated: April 19, 2012.

Carolyn M. Clancy,

Director.

[FR Doc. 2012–10007 Filed 4–25–12; 8:45 am]

BILLING CODE 4160–90–M

DEPARTMENT OF HEALTH AND HUMAN SERVICES

Agency for Healthcare Research and Quality

Agency Information Collection Activities: Proposed Collection; Comment Request

AGENCY: Agency for Healthcare Research and Quality, HHS.

ACTION: Notice.

SUMMARY: This notice announces the intention of the Agency for Healthcare Research and Quality (AHRQ) to request that the Office of Management and Budget (OMB) approve the proposed information collection project: ''American Recovery and Reinvestment Act ''Developing a Registry of Registries''.'' In accordance with the Paperwork Reduction Act, 44 U.S.C. 3501–3521, AHRQ invites the public to comment on this proposed information collection.

This proposed information collection was previously published in the **Federal Register** on February 23, 2012 and allowed 60 days for public comment. No comments were received. The purpose of this notice is to allow an additional 30 days for public comment.

DATES: Comments on this notice must be received by May 29, 2012.

ADDRESSES: Written comments should be submitted to: AHRQ's OMB Desk Officer by fax at (202) 395–6974 (attention: AHRQ's desk officer) or by email at *OIRA_submission@omb.eop.gov* (attention: AHRQ's desk officer).

Copies of the proposed collection plans, data collection instruments, and specific details on the estimated burden can be obtained from the AHRQ Reports Clearance Officer.

FOR FURTHER INFORMATION CONTACT: Doris Lefkowitz, AHRQ Reports Clearance Officer, (301) 427–1477, or by email at *doris.lefkowitz@AHRQ.hhs.gov*.

SUPPLEMENTARY INFORMATION:

Proposed Project

American Recovery and Reinvestment Act ''Developing a Registry of Registries''

The Food and Drug Administration Modernization Act of 1997, Public Law 105–115, provided for the creation of a Clinical Trials Data Bank, known as *ClinicalTrials.gov*. Since its launch in 2000, the *ClinicalTrials.gov* system has registered over 90,500 trials. The large volume of studies currently listed in *ClinicalTrials.gov* and the high usage numbers suggest that the system has been successful at improving access to information about clinical studies. However, while *ClinicalTrials.gov* supports the listing of observational studies, such listing is not required.

Patient registries are a distinct type of observational study. Patient registries may be designed for many purposes, such as to observe the natural history of disease, examine comparative effectiveness, or fulfill post-approval commitments. Patient registries have specific characteristics that are not currently captured on *ClinicalTrials.gov*. To date, some registry sponsors have attempted to leverage the observational study model to post patient registry-type records on *ClinicalTrials.gov*. However, stakeholders have noted that the system does not fully meet their needs.

Patient registries have received significant attention and funding in recent years. Similar to controlled interventional studies, patient registries represent some burden to patients (e.g., time to complete patient reported outcome measures, risk of loss of privacy), who often participate voluntarily in hopes of improving knowledge about a disease or condition. Patient registries also represent a substantial investment of health research resources. Despite these factors, registration of patient registries in *ClinicalTrials.gov* is not currently required, presenting the potential for duplication of efforts and insufficient dissemination of findings that are not published in the peer-reviewed literature. To ensure that resources are used in the most efficient manner, registries need to be listed in a manner similar to that of trials in *ClinicalTrials.gov*.

By creating a central point of collection for information about all patient registries in the United States, the Registry of Patient Registries (RoPR) helps to further AHRQ's goals by making information regarding quality, appropriateness, and effectiveness of health services (and patient registries in particular) more readily available and centralized.

The primary goal of this project is to engage stakeholders in the design and development of a RoPR database system that is compatible with *ClinicalTrials.gov* and meets the following objectives:

(1) Provides a searchable database of patient registries in the United States (to promote collaboration, reduce redundancy, and improve transparency);

(2) Facilitates the use of common data fields and definitions in similar health conditions (to improve opportunities for sharing, comparing, and linkage);

(3) Provides a public repository of searchable summary results (including

results from registries that have not yet been published in the peer-reviewed literature);

(4) Offers a search tool to locate existing data that researchers can request for use in new studies; and serves as a recruitment tool for researchers and patients interested in participating in patient registries.

This study is being conducted by AHRQ through its contractor, the Outcome DEcIDE Center, pursuant to the American Recovery and Reinvestment Act, Public Law 111–5, and pursuant to AHRQ's statutory authority to conduct and support research and disseminate information on health care and on systems for the delivery of such care, including activities with respect to the quality, effectiveness, efficiency, appropriateness and value of health care services and with respect to database development. 42 U.S.C. 299a(a)(1) and (8).

Method of Collection

To achieve the goals of this project the following data collections will be implemented:

(1) Collect information from registry holders, defining a patient registry profile via a web-based interface, to populate the RoPR database system.

The purpose of the RoPR is to create a readily available public resource in the model of ClinicalTrials.gov to share information on existing patient registries to promote collaboration, reduce redundancy, and improve transparency in registry research. Patient registry research has become more prevalent and, based on stakeholder feedback, is not adequately served by ClinicalTrials.gov at present. The information being collected in the RoPR record will be visible to the public visiting the RoPR Web site and will be available for public use in this capacity.

Estimated Annual Respondent Burden

Exhibit 1 shows the estimated annualized burden for the respondents' time to participate in the RoPR. Because the RoPR is a voluntary system available to any entity conducting a patient registry, it is not possible to determine the number of potential respondents. We do know that over 3,800 newly registered records designated as ''observational studies'' were entered into ClinicalTrials.gov in 2010. Only a subset of this number (which we will estimate at a maximum of 40%) would qualify as patient registries and would likely be registered in the RoPR. Therefore, we use 1,520 (3,800*0.40) in Exhibits 1 and 2 below as a very rough, but high, estimation of the potential number of respondents who will enter registries into the RoPR annually. The actual number of respondents will depend on a variety of factors and could vary widely. It should be remembered that mandates could evolve making registration in the RoPR mandatory. Our estimates therefore attempt to factor an upper threshold for volume.

Each respondent will enter a new RoPR record only once and is estimated to take 45 minutes. An estimated 50% (760 records) of RoPR records will be updated once a year and will take about 15 minutes. This estimate is based on a query of ClinicalTrials.gov which showed that about 50% of observational studies registered in ClinicalTrials.gov had been updated in the past year. The total respondent burden is estimated to be 1,330 hours annually.

Exhibit 2 shows the estimated cost burden associated with the respondent's time to participate in the RoPR. The total cost burden is estimated to be $45,579 annually.

EXHIBIT 1—ESTIMATED ANNUALIZED BURDEN HOURS

Form name	Number of respondents	Number of responses per respondent	Hours per response	Total burden hours
New RoPR Record	1,520	1	45/60	1,140
Review/update RoPR Record	760	1	15/60	190
Total	2,280	na	na	1,330

EXHIBIT 2—ESTIMATED ANNUALIZED COST BURDEN

Form Name	Number of espondents	Total burden hours	Average hourly rate +	Total cost burden
New RoPR Record	1,520	1,140	$34.27	$39,068
Review/update RoPR Record	760	190	34.27	6,511
Total	2,280	1,330	na	$45,579

+ Based upon the mean average wage for Healthcare Practitioners and Technical Occupations, May 2010 National Occupational Employment and Wage Estimates, U.S. Department of Labor, Bureau of Labor Statistics. Available at: *http://www.bls.gov/oes/current/oes_nat.htm#29–0000.*

Estimated Annual Costs to the Federal Government

Exhibit 3 shows the estimated total and annualized cost to the government to create and maintain the RoPR for 3 years. The total cost is estimated to be $3,184,333.

EXHIBIT 3—ESTIMATED TOTAL AND ANNUALIZED COST

Cost component	Total cost	Annualized cost
Project Development	$2,318,509	$772,836
Project Management	409,149	136,383
Overhead	456,675	152,225

EXHIBIT 3—ESTIMATED TOTAL AND ANNUALIZED COST—Continued

Cost component	Total cost	Annualized cost
Total	3,184,333	1,061,444

Request for Comments

In accordance with the Paperwork Reduction Act, comments on AHRQ's information collection are requested with regard to any of the following: (a) Whether the proposed collection of information is necessary for the proper performance of AHRQ healthcare research and healthcare information dissemination functions, including whether the information will have practical utility; (b) the accuracy of AHRQ's estimate of burden (including hours and costs) of the proposed collection(s) of information; (c) ways to enhance the quality, utility, and clarity of the information to be collected; and (d) ways to minimize the burden of the collection of information upon the respondents, including the use of automated collection techniques or other forms of information technology.

Comments submitted in response to this notice will be summarized and included in the Agency's subsequent request for OMB approval of the proposed information collection. All comments will become a matter of public record.

Dated: April 19, 2012.

Carolyn M. Clancy,

Director.

[FR Doc. 2012–10009 Filed 4–25–12; 8:45 am]

BILLING CODE 4160–90–M

DEPARTMENT OF HEALTH AND HUMAN SERVICES

Agency for Healthcare Research and Quality

Scientific Information Request on Local Therapies for Unresectable Primary Hepatocellular Carcinoma

AGENCY: Agency for Healthcare Research and Quality (AHRQ), HHS.

ACTION: Request for scientific information submissions.

SUMMARY: The Agency for Healthcare Research and Quality (AHRQ) is seeking scientific information submissions from manufacturers of local, minimally invasive, medical devices for unresectable primary hepatocellular carcinoma (e.g., ablation, radiotherapy, or embolization devices). Scientific information is being solicited to inform our Comparative Effectiveness Review of Local Therapies for Unresectable Primary Hepatocellular Carcinoma, which is currently being conducted by the Evidence-based Practice Centers for the AHRQ Effective Health Care Program. Access to published and unpublished pertinent scientific information on this device will improve the quality of this comparative effectiveness review. AHRQ is requesting this scientific information and conducting this comparative effectiveness review pursuant to Section 1013 of the Medicare Prescription Drug, Improvement, and Modernization Act of 2003, Public Law 108–173.

DATES: Submission Deadline on or before May 29, 2012.

ADDRESSES:

Online submissions: http://effective healthcare.AHRQ.gov/index.cfm/submit scientific-information-packets/. Please select the study for which you are submitting information from the list of current studies and complete the form to upload your documents.

Email submissions: ehcsrc@ohsu.edu (please do not send zipped files—they are automatically deleted for security reasons).

Print submissions: Robin Paynter, Oregon Health and Science University, Oregon Evidence-based Practice Center, 3181 SW Sam Jackson Park Road, Mail Code: BICC, Portland, OR 97239–3098.

FOR FURTHER INFORMATION CONTACT: Robin Paynter, Research Librarian, Telephone: 503–494–0147 or Email: *ehcsrc@ohsu.edu*.

SUPPLEMENTARY INFORMATION:

In accordance with Section 1013 of the Medicare Prescription Drug, Improvement, and Modernization Act of 2003, Public Law 108–173, the Agency for Healthcare Research and Quality has commissioned the Effective Health Care (EHC) Program Evidence-based Practice Centers to complete a comparative effectiveness review of the evidence for local therapies for unresectable primary hepatocellular carcinoma.

The EHC Program is dedicated to identifying as many studies as possible that are relevant to the questions for each of its reviews. In order to do so, we are supplementing the usual manual and electronic database searches of the literature by systematically requesting information (e.g., details of studies conducted) from medical device industry stakeholders through public information requests, including via the **Federal Register** and direct postal and/or online solicitations. We are looking for studies that report on local therapies for unresectable primary hepatocellular carcinoma, including those that describe adverse events, as specified in the key questions detailed below. The entire research protocol, including the key questions, is also available online at: *http://www.effective healthcare.AHRQ.gov/index.cfm/search-for-quides-reviews-and-reports/?productid=1012&pageaction=displayproduct#5056*.

This notice is a request for industry stakeholders to submit the following:

- A current product label, if applicable (preferably an electronic PDF file).
- Information identifying published randomized controlled trials and observational studies relevant to the clinical outcomes. Please provide both a list of citations and reprints if possible.
- Information identifying unpublished randomized controlled trials and observational studies relevant to the clinical outcomes. If possible, please provide a summary that includes the following elements: study number, study period, design, methodology, indication and diagnosis, proper use instructions, inclusion and exclusion criteria, primary and secondary outcomes, baseline characteristics, number of patients screened/eligible/enrolled/lost to withdrawn/follow-up/analyzed, and effectiveness/efficacy and safety results.
- Registered ClinicalTrials.gov studies. Please provide a list including the ClinicalTrials.gov identifier, condition, and intervention.

Your contribution is very beneficial to this program. AHRQ is not requesting and will not consider marketing material, health economics information, or information on other indications. This is a voluntary request for information, and all costs for complying with this request must be borne by the submitter. In addition to your scientific information please submit an index document outlining the relevant information in each file along with a statement regarding whether or not the submission comprises all of the complete information available.

Please Note: The contents of all submissions, regardless of format, will be available to the public upon request unless prohibited by law.

The draft of this review will be posted on AHRQ's EHC program Web site and available for public comment for a period of 4 weeks. If you would like to be notified when the draft is posted, please sign up for the email list at: *http://effectivehealthcare.AHRQ.gov/index.cfm/join-the-email-list1/*.

The Key Questions

Question 1

What is the comparative effectiveness of the various liver-directed therapies in patients with hepatocellular carcinoma (HCC) who are not otherwise candidates for surgical resection or transplantation with no evidence of extrahepatic disease regarding survival and quality of life?

Question 2

What are the comparative harms of the various liver-directed therapies in patients with HCC who are not otherwise candidates for surgical resection or transplantation with no evidence of extrahepatic disease regarding adverse events?

Question 3

Are there differences in comparative effectiveness of various liver-directed therapies in patients with HCC who are not otherwise candidates for surgical resection or transplantation for specific patient and tumor characteristics, such as age, gender, disease etiology, and Child-Pugh score?

Dated: April 19, 2012.

Carolyn M. Clancy,

AHRQ, Director.

[FR Doc. 2012–10011 Filed 4–25–12; 8:45 am]

BILLING CODE 4160–90–M

DEPARTMENT OF HEALTH AND HUMAN SERVICES

Centers for Disease Control and Prevention

[30Day-12–0010]

Agency Forms Undergoing Paperwork Reduction Act Review

The Centers for Disease Control and Prevention (CDC) publishes a list of information collection requests under review by the Office of Management and Budget (OMB) in compliance with the Paperwork Reduction Act (44 U.S.C. chapter 35). To request a copy of these requests, call (404) 639–7570 or send an email to *omb@cdc.gov*. Send written comments to CDC Desk Officer, Office of Management and Budget, Washington, DC or by fax to (202) 395–5806. Written comments should be received within 30 days of this notice.

Proposed Project

The National Birth Defects Prevention Study (NBDPS)–(0920–0010, Expiration 06/30/2012)—Extension—National Center on Birth Defects and Developmental Disabilities (NCBDDD), Centers for Disease Control and Prevention (CDC).

Background and Brief Description

CDC has been monitoring the occurrence of serious birth defects and genetic diseases in Atlanta since 1967 through the Metropolitan Atlanta Congenital Defects Program (MACDP). The MACDP is a population-based surveillance system for birth defects in the 5 counties of Metropolitan Atlanta. Its primary purpose is to describe the spatial and temporal patterns of birth defects occurrence and serves as an early warning system for new teratogens. In 1997, the Birth Defects Risk Factor Surveillance (BDRFS) study, a case-control study of risk factors for selected birth defects, became the National Birth Defects Prevention Study (NBDPS). The major components of the study did not change.

The NBDPS is a case-control study of major birth defects that includes cases identified from existing birth defect surveillance registries in nine states, including metropolitan Atlanta. Control infants are randomly selected from birth certificates or birth hospital records. Mothers of case and control infants are interviewed using a computer-assisted telephone interview. The interview takes approximately one hour. A maximum of thirty-six hundred interviews are planned, 2,700 cases and 900 controls, resulting in a maximum interview burden of approximately 3,600 hours for all Centers.

Parents are also asked to collect cheek cells from themselves and their infants for DNA testing. The collection of cheek cells by the mother, father, and infant is estimated to take about 10 minutes per person. Each person will be asked to rub 1 brush inside the left cheek and 1 brush inside the right cheek for a total of 2 brushes per person. Collection of the cheek cells takes approximately 1–2 minutes, but the estimate of burden is 10 minutes to account for reading and understanding the consent form and specimen collection instructions and mailing back the completed kits. The anticipated maximum burden for collection of the cheek cells is 1,800 hours for all Centers.

Information gathered from both the interviews and the DNA specimens will be used to study independent genetic and environmental factors as well as gene-environment interactions for a broad range of carefully classified birth defects.

This request is submitted to obtain OMB clearance for three additional years.

There are no costs to the respondents other than their time. The total estimated annualized burden is 5,400 hours.

ESTIMATED ANNUALIZED BURDEN TABLE

Type of respondents	Form name	Number of respondents	Number of responses per respondent	Average burden per response (in hours)
Mothers	NBDPS mother questionnaire	3,600	1	1
Mothers, fathers, infants	Cheek Cell Specimen Collection	10,800	1	10/60

Kimberly S. Lane,

Deputy Director, Office of Science Integrity, Office of the Associate Director for Science, Office of the Director, Centers for Disease Control and Prevention.

[FR Doc. 2012–10035 Filed 4–25–12; 8:45 am]

BILLING CODE 4163–18–P

DEPARTMENT OF HEALTH AND HUMAN SERVICES

Food and Drug Administration

[Docket No. FDA–2011–N–0902]

Agency Information Collection Activities; Submission for Office of Management and Budget Review; Comment Request; Prescription Drug Product Labeling: Medication Guide Requirements

AGENCY: Food and Drug Administration, HHS.

ACTION: Notice.

SUMMARY: The Food and Drug Administration (FDA) is announcing that a proposed collection of information has been submitted to the Office of Management and Budget (OMB) for review and clearance under the Paperwork Reduction Act of 1995 (the PRA).

DATES: Fax written comments on the collection of information by May 29, 2012.

ADDRESSES: To ensure that comments on the information collection are received, OMB recommends that written comments be faxed to the Office of Information and Regulatory Affairs, OMB, Attn: FDA Desk Officer, FAX: 202–395–7285, or emailed to *oira_submission@omb.eop.gov.* All comments should be identified with the OMB control number 0910–0393. Also include the FDA docket number found in brackets in the heading of this document.

FOR FURTHER INFORMATION CONTACT: Juanmanuel Vilela, Office of Information Management, Food and Drug Administration, 1350 Piccard Dr., PI50–400B, Rockville, MD 20850, 301–796–7651, *juanmanuel.vilela@fda.hhs.gov.*

SUPPLEMENTARY INFORMATION: In compliance with 44 U.S.C. 3507, FDA has submitted the following proposed collection of information to OMB for review and clearance.

Prescription Drug Product Labeling; Medication Guide Requirements (OMB Control Number 0910–0393)—Extension

FDA regulations require the distribution of patient labeling, called Medication Guides, for certain prescription human drug and biological products used primarily on an outpatient basis that pose a serious and significant public health concern requiring distribution of FDA-approved patient medication information. These Medication Guides inform patients about the most important information they should know about these products in order to use them safely and effectively. Included is information such as the drug's approved uses, contraindications, adverse drug reactions, and cautions for specific populations, with a focus on why the particular product requires a Medication Guide. These regulations are intended to improve the public health by providing information necessary for patients to use certain medication safely and effectively.

The regulations contain the following reporting requirements that are subject to the PRA. The estimates for the burden hours imposed by the following regulations are listed in table 1 of this document:

- 21 CFR 208.20—Applicants must submit draft Medication Guides for FDA approval according to the prescribed content and format.
- 21 CFR 208.24(e)—Each authorized dispenser of a prescription drug product for which a Medication Guide is required, when dispensing the product to a patient or to a patient's agent, must provide a Medication Guide directly to each patient unless an exemption applies under 21 CFR 208.26.
- 21 CFR 208.26 (a)—Requests may be submitted for exemption or deferral from particular Medication Guide content or format requirements.
- 21 CFR 314.70(b)(3)(ii) and 21 CFR 601.12(f)—Application holders must submit changes to Medication Guides to FDA for prior approval as supplements to their applications.

In the **Federal Register** of December 21, 2011 (76 FR 79194), FDA published a 60-day notice requesting public comment on the proposed collection of information. FDA received the following comments:

(Comment 1) One comment states that FDA's hourly burden estimate of 3 minutes per Medication Guide for pharmacists to comply with the requirements is miscalculated, although more in line with current practices versus previous FDA estimates.

(Response) Because the comment did not indicate if the miscalculation was over-or under-estimated or provide alternative burden estimates for pharmacy time associated with distribution of a Medication Guide, we continue to use 3 minutes as the estimated burden for pharmacists to distribute Medication Guides to patients.

(Comment 2) One comment said that there are distributor costs to comply with the Medication Guide requirements and FDA's estimate omits § 208.24(c), which provides that ''Each distributor or packer that receives Medication Guides, or the means to produce Medication Guides, from a manufacturer under paragraph (b) of this section shall provide those Medication Guides, or the means to produce Medication Guides, to each authorized dispenser to whom it ships a container of drug product.'' The comment states that the December 21, 2011, notice of proposed information collection (76 FR 79194) does not include an estimate for the reporting requirements of § 208.24(c) and that the requirement should be included in FDA's assessment.

(Response) FDA has re-evaluated § 208.24(c) with regards to information collection burden on distributors and packers and determined that § 208.24(c) does not contain an additional collection of information subject to the reporting requirements of the PRA. A ''collection of information'' includes an Agency request or requirement that members of the public submit reports, keep records, or provide information to third parties or the public by or for an Agency. Therefore, the manufacturer is responsible for providing information to third parties (§ 208.24(a)), i.e., Medication Guides, and the distributor or packer distributes the Medication Guides with the shipment of drugs to the dispensers. Thus, § 208.24(c) is not subject to the reporting requirements of the PRA.

(Comment 3) One comment says that FDA should reassess the need to provide Medication Guides with each prescription refill and states there are situations where it is not necessary due to certain circumstances. The comment states that Medication Guides should be a tool to enhance the level of care to consumers, rather than a hindrance to pharmacists in their ability to provide quality patient care.

(Response) FDA agrees and directs the comment to the guidance made available to the public entitled ''Medication Guides—Distribution Requirements and Inclusion in Risk Evaluation and Mitigation Strategies (REMS).'' In this guidance, FDA articulates the circumstances under which FDA intends to exercise enforcement discretion regarding the requirement to provide Medication Guides in certain settings.

(Comment 4) One comment states that Medication Guides increasingly become accessible online for download and print and the costs for printing, including paper, toner, administrative, and software costs, have shifted from the manufacturers to the pharmacies.

(Response) While Medication Guides are increasingly available online for download and printing, the FDA does not agree that a financial and acquisition burden has shifted to or been created for dispensers. The comment mischaracterizes the cost to dispensers associated with the distribution of Medication Guides. For purposes of information collection requests under the PRA, capital costs are costs for equipment, machinery, and construction that, if not for FDA's request or requirement, the respondent would not incur. Capital costs do not include costs to achieve regulatory compliance. The costs presented by the comment are not capital costs because they are costs associated with achieving regulatory compliance with requirements of the FD&C Act, not costs associated specifically with equipment, machinery, and construction needed to retain appropriate substantiating evidence.

(Comment 5) One comment states that the length of Medication Guides continues to be burdensome and hinders a pharmacist from utilizing a potentially effective tool. The comment stresses the need for a succinct, one-page document that can be easily integrated into current pharmacy practice workflow.

(Response) FDA generally agrees with the comment and is currently in the process of evaluating whether a one-page solution can be implemented.

FDA estimates the burden of this collection of information as follows:

TABLE 1—ESTIMATED ANNUAL REPORTING BURDEN [1]

21 CFR section	Number of respondents	Number of responses per respondent	Total annual responses	Average burden per response	Total hours
208.20	25	1	25	320	8,000
314.70(b)(3)(ii), 601.12(f)	5	1	5	72	360
208.24(e)	59,000	5,000	295 million	3 minutes	14,750,000
208.26(a)	1	1	1	4	4
Total					14,758,364

[1] There are no capital costs or operating and maintenance costs associated with this collection of information.

Dated: April 20, 2012.

Leslie Kux,

Assistant Commissioner for Policy.

[FR Doc. 2012–10022 Filed 4–25–12; 8:45 am]

BILLING CODE 4160–01–P

DEPARTMENT OF HEALTH AND HUMAN SERVICES

Health Resources and Services Administration

Agency Information Collection Activities: Submission for OMB Review; Comment Request

Periodically, the Health Resources and Services Administration (HRSA) publishes abstracts of information collection requests under review by the Office of Management and Budget (OMB), in compliance with the Paperwork Reduction Act of 1995 (44 U.S.C. chapter 35). To request a copy of the clearance requests submitted to OMB for review, email *paperwork@hrsa.gov* or call the HRSA Reports Clearance Office on (301) 443–1984.

The following request has been submitted to the Office of Management and Budget for review under the Paperwork Reduction Act of 1995:

Proposed Project: Assessing Factors That Impact AIDS Drug Assistance Program (ADAP) Enrollment and Management in the Face of ADAP Waiting Lists (OMB No. 0915–xxxx)—[New]

HRSA's AIDS Drug Assistance Program (ADAP) provides assistance to help low-income, uninsured and underinsured individuals living with HIV/AIDS get access to life-saving medications. As part of the Ryan White HIV/AIDS Program, ADAP is the payer of last resort. Clients enrolled in ADAP have exhausted all other resources to obtain necessary medications and care. In recent years, ADAP has experienced an increase in enrollment while funding resources have decreased.

This study will use case study methods to identify and examine factors that contribute to the rising enrollments in ADAP and States' abilities to meet demands for ADAP services. Data collection will include interviews with up to eight respondents in each of eight selected states, for a maximum of 64 total respondents. Each interview will last approximately one and a half hours. The respondents fall into three general categories—ADAP personnel, State HIV/AIDS program leads, and personnel from related State and local programs such as Medicaid and pharmacy assistance programs. Interviews will be conducted over a period of two and a half months.

The proposed study will assess factors that may contribute to the rise in ADAP enrollment and costs such as new HIV cases, earlier use of antiretroviral medications, lower attrition of existing clients, unemployment and loss of insurance, or increasing drug costs. In addition, the study will examine factors that may decrease ADAP costs such as health care reform and cost containment strategies. Findings from the study will be used to develop policy and to recommend promising practices for managing ADAPs.

The annual estimate of burden is as follows:

Activity	Number of respondents	Responses per respondent	Total responses	Hours per response	Total burden hours
ADAP Site Visit Coordination	8	1	8	1	8
Instrument:					
ADAP Personnel Interview	32	1	32	1.5	48
State HIV/AIDS Lead Interview	8	1	8	1.5	12

Activity	Number of respondents	Responses per respondent	Total responses	Hours per response	Total burden hours
Alternative State/Local Program Informant Interview	24	1	24	1.5	36
Total	72				104

Written comments and recommendations concerning the proposed information collection should be sent within 30 days of this notice to the desk officer for HRSA, either by email to *OIRA_submission@omb.eop.gov* or by fax to 202–395–6974. Please direct all correspondence to the ''attention of the desk officer for HRSA.''

Dated: April 19, 2012.

Reva Harris,

Acting Director, Division of Policy and Information Coordination.

[FR Doc. 2012–10032 Filed 4–25–12; 8:45 am]

BILLING CODE 4165–15–P

DEPARTMENT OF HEALTH AND HUMAN SERVICES

Health Resources and Services Administration

Agency Information Collection Activities: Submission for OMB Review; Comment Request

Periodically, the Health Resources and Services Administration (HRSA) publishes abstracts of information collection requests under review by the Office of Management and Budget (OMB), in compliance with the Paperwork Reduction Act of 1995 (44 U.S.C. chapter 35). To request a copy of the clearance requests submitted to OMB for review, email *paperwork@hrsa.gov* or call the HRSA Reports Clearance Office on (301) 443–1984.

The following request has been submitted to the Office of Management and Budget for review under the Paperwork Reduction Act of 1995:

Proposed Project: Uncompensated Services Assurance Report (OMB No. 0915–0077)—[Revision]

Under the Hill-Burton Act, the Government provides grants and loans for construction or renovation of health care facilities. As a condition of receiving this construction assistance, facilities are required to provide services to persons unable to pay. A condition of receiving this assistance requires facilities to provide assurances periodically that the required level of uncompensated care is being provided, and that certain notification and record keeping procedures are being followed. These standard requirements are referred to as the uncompensated services assurance.

The annual estimate of burden is as follows:

ESTIMATE OF INFORMATION COLLECTION BURDEN

Instrument	Number of respondents	Responses per respondent	Total responses	Hours per response	Total burden hours
Disclosure Burden (42 CFR)					
Published Notices (124.504(c))	63	1	63	0.75	47.25
Individual Notices (124.504(c))	63	1	63	43.60	2,746.80
Determinations of Eligibility (124.507)	63	99	6,237	0.75	4,677.75
Subtotal Disclosure Burden					7,471.80
Reporting					
Uncompensated Services Report—HRSA–710 Form (124.509(a))	10	1	10	11.00	110.00
Application for Compliance Alternatives					
Public Facilities (124.513)	4	1	4	6.00	24.00
Small Obligation Facilities (124.514(c))	0				
Charitable Facilities (124.516(c))	0				
Annual Certification for Compliance Alternatives					
Public Facilities (124.509(b))	32	1	32	0.50	16.00
Charitable Facilities (124.509(b))	13	1	13	0.50	6.50
Small Obligation Facilities (124.509(c))	0		0		
Complaint Information (124.511(a))					
Individuals	10	1	10	0.25	2.50
Facilities	10	1	10	0.50	5.00
Subtotal Reporting Burden					164.00

Recordkeeping	Number of record keepers	Hours per year	Total burden hours
Recordkeeping			
Non-alternative Facilities (124.510(a))	33	50	1,650.00
Unrestricted Availability (124.510(b))	30	50	1,500.00
Subtotal Recordkeeping Burden			3,150.00

Email comments to *paperwork@hrsa.gov* or mail the HRSA Reports Clearance Officer, Room 10–29, Parklawn Building, 5600 Fishers Lane, Rockville, MD 20857. Written comments should be received within 60 days of this notice.

Dated: April 20, 2012.

Reva Harris,

Acting Director, Division of Policy and Information Coordination.

[FR Doc. 2012–10031 Filed 4–25–12; 8:45 am]

BILLING CODE 4165–15–P

DEPARTMENT OF HEALTH AND HUMAN SERVICES

National Institutes of Health

National Institute of Child Health and Human Development Submission for OMB Review; Comment Request; Provider-Based Sampling Feasibility Study for the Vanguard (Pilot) Study and Data Collection Updates for the National Children's Study (NICHD)

SUMMARY: Under the provisions of Section 3507(a)(1)(D) of the Paperwork Reduction Act of 1995, the National Institute of Child Health and Human Development (NICHD), the National Institutes of Health (NIH) has submitted to the Office of Management and Budget (OMB) a request for review and approval of the information collection listed below. This proposed information collection was previously published in the **Federal Register** on January 30, 2012, pages 4569–4571, and allowed 60 days for public comment. No written comments were received. The purpose of this notice is to allow an additional 30 days for public comment. The National Institutes of Health may not conduct or sponsor, and the respondent is not required to respond to, an information collection that has been extended, revised, or implemented on or after October 1, 1995, unless it displays a currently valid OMB control number.

Proposed Collection

Title: Provider-Based Sampling Feasibility Study for the Vanguard (Pilot) Study and Data Collection Updates for the National Children's Study (NICHD).

The National Children's Study, Vanguard (Pilot) Study.

Type of Information Collection Request: Revision.

Need and Use of Information Collection

The purpose of the proposed methodological study is to continue the Vanguard phase of the National Children's Study with updated instruments and additional biospecimen collections and physical measures and to evaluate the feasibility, acceptability, and cost of a different sampling strategy for enrollment of pregnant women. This study is one component of a larger group of studies being conducted during the Vanguard Phase of the National Children's Study (NCS), a prospective, national longitudinal study of child health and development. In combination, these studies will be used to inform the design of the Main Study of the National Children's Study.

Background

The National Children's Study is a prospective, national longitudinal study of the interaction between environment, genetics on child health and development. The Study defines ''environment'' broadly, taking a number of natural and man-made environmental, biological, genetic, and psychosocial factors into account. Findings from the Study will be made available as the research progresses, making potential benefits known to the public as soon as possible.

The National Children's Study (NCS) has several components, including a pilot or Vanguard Study, and a Main Study to collect exposure and outcome data. The sample frame for the NCS Vanguard and Main Study was initially based on a national probability sample using geography as the basis and selecting about 100 of the about 3,000 counties in the United States as the basis for Primary Sampling Units. Within the Primary Sampling Units, smaller geographic segments were selected as Secondary Sampling Units in an attempt to normalize live birth rates per area sampled. Women who resided at the time of enrollment within a designated Secondary Sampling Unit and were either pregnant or between 18 and 49 were eligible for enrollment. The initial recruitment technique within the selected geographic areas was household contact by field workers going door to door.

The Vanguard Study was launched in January 2009 and, by the summer of 2009, field experience suggested that the household contact recruitment strategy was not feasible with available resources. Thus, in 2010, new recruitment strategies were launched to evaluate options. By late 2011, the NCS had sufficient data to evaluate operational aspects of various recruitment strategies. Preliminary analyses suggested that a Provider-Based Recruitment strategy was the most efficient, but due to constrictions of the geographic sampling frame, the potential of the strategy was limited. Specifically, many women had to be screened at a particular provider to locate the relatively few who resided in a designated segment. Anticipating this limitation, the NCS Program Office developed and discussed with the NCS Federal Advisory Committee a different sampling frame using provider location. This new sampling strategy is termed Provider-Based Sampling (PBS). Information from this data collection is critical to determine the plausibility of a provider-based sampling frame as an option for some parts of the NCS Main Study.

Research Questions

Two research goals will be accomplished by this information collection. One goal is to test the feasibility of Provider-Based Sampling using three study locations. Another goal is to systematically pilot additional study visit measures and collections to assess the scientific robustness, burden to participants and study infrastructure, and cost for use in the Vanguard (Pilot) Study and to inform the design of the Main Study.

Methods

Provider Based Sampling

We will compile a list of prenatal providers serving women who reside within the Primary Sampling Unit at three study locations. Providers will be asked to complete a brief questionnaire

about their practice and their patient demographics. For this pilot, a woman will be eligible for recruitment if she resides in the Primary Sampling Unit and is seeing a provider for her first prenatal visit.

Recruitment of participants at the selected provider offices will largely follow the protocol and procedures developed for the Provider-Based Recruitment Substudy, as previously approved by the Office of Information and Regulatory Affairs within the Office of Management and Budget. Potential participants will be screened on age eligibility, residence in the sampled Primary Sampling Unit, and pregnancy status at the initial prenatal visit. In some locations, medical records may be pre-screened to identify participants meeting these eligibility criteria.

Supplemental Information and Biospecimen Collections

We will continue data collection with pregnancy and birth periods, as well as postnatal data collection points at 3, 6, 9, 12, 18, and 24 months of age. We propose to add or modify the selected measures below to address analytic goals of assessing feasibility, acceptability and cost of specific study visit measures.

Core Questionnaire: We propose to pilot a Core Questionnaire containing key variables and designed to collect core data at every study visit contact from the time that the enrolled child is 6 months of age to the time the child is 5 years of age.

30-Month Data Collection Module: We propose piloting an age-specific module alongside of the Core Questionnaire with the 30-Month Interview.

Validation Questions for 18, 24 and 30 Month: We propose addition of brief, telephone-based questions that would be fielded to a random sample of each interviewer's cases after completion of the 18-Month, 24-Month, and 30-Month interviews to monitor interviewer performance and identify occurrences of data falsification.

Nonrespondent Questionnaire: We will collect information on why a participant chose to not enroll or withdraw from the NCS. This information may be used to revise our approaches to recruitment and will help the Study frame other systematic analyses of nonresponse bias.

Physical Measures: The addition of 6 month, 12, and 24-Month infant measures of child anthropometry and/or blood pressure may provide critical pieces of information for future research on the causes of obesity, diabetes, premature puberty and a host of other health outcomes.

Revised Father Questionnaire: We seek to incorporate behavioral, emotional, educational and contextual consequences to enable a complete assessment of psychosocial influences on children's well-being. The revised Father Questionnaire now includes measures addressing key social/personal resources and fathers' capacity, desire and attitudes towards engaging with mothers and children.

Additional Instrument at the 24-Month Interview: The Modified Checklist for Autism in toddlers (M–CHAT ™) is a validated brief screening measure for identification of Autism and will be added to the 24-Month Interview.

Breast Milk Collection 1 and 3 Months: Additional collections are needed to determine the feasibility, acceptability and cost of collection.

Infant Urine Collection at 6- and 12-Month Visits: Additional collections are needed to determine the feasibility, acceptability and cost of collection.

Infant Blood and Saliva Collection at the 12-Month Visit: Additional collections are needed to determine the feasibility, acceptability and cost of collection.

Frequency of Response: See above descriptions.

Affected Public: Healthcare providers, pregnant women, fathers, and their children. The additional annualized cost to respondents over the three-year data collection period is estimated at annualized cost of $229,804. This is calculated as estimating 31,082 respondent contacts at an estimated average of 0.73 hours per contact, for a total estimated annual respondent burden as 22,791 hours. There are no Capital Costs to report. There are no Operating or Maintenance Costs to report.

Data collection activity	Type of respondent	Estimated number of respondents	Estimated number of responses per respondent	Average burden per response (in hours)	Estimated total annual burden hours	Estimated total annual respondent cost
Screening Activities						
Provider Based Sampling Eligibility Screener (PBS)	Pregnant Women	3,125	1	20/60	1,042	$10,417
Provider Based Sampling Frame Questionnaire (PBS)	Healthcare Providers	50	1	25/60	21	2,104
Continuous Activities						
Nonrespondent Questionnaire (PB, EH, TT–HI, TT–LI, PBS)	Pregnant Women, Mothers or Fathers	480	1	5/60	40	400
Validation Interview—up to 30 Months (PB, EH, TT–HI, TT–LI, PBS).	Respondents	1,268	1	5/60	106	$1,057
Participant Verification (PB, EH, TT–HI, TT–LI, PBS).	Pregnant Women, Mothers or Fathers.	2,320	1	5/60	193	1,933
Tracing Interview (PB, EH, TT–HI, TT–LI, PBS).	Respondents	1,167	13	10/60	2,528	25,281
Pregnancy Activities						
Low-intensity Questionnaire (Found Pregnant) (TT–LI).	Pregnant Women	173	1	15/60	43	432

Data collection activity	Type of respondent	Estimated number of respondents	Estimated number of responses per respondent	Average burden per response (in hours)	Estimated total annual burden hours	Estimated total annual respondent cost
Pregnancy Visit 1 Interview (PB, EH, TT–HI, PBS).	Pregnant Women	2,018	1	35/60	1,177	11,774
Pregnancy Visit 2 Interview (PB, EH, TT–HI, PBS).	Pregnant Women	1,817	1	25/60	757	7,569
Biological and Environmental Sample Collection—Prenatal (PB, EH, TT–HI).	Pregnant Women	1,456	2	60/60	2,913	29,127
Pregnancy Health Care Log (PB, EH, TT–HI, PBS).	Pregnant Women	1,615	1	20/60	538	5,382
Father Interview (PB, EH, TT–HI)	Alternate Caregiver.	818	1	35/60	477	4,770
Birth-Related Activities						
Birth Visit Interview (PB, EH, TT–HI, PBS).	Mother/Baby	1,141	1	20/60	380	3,802
Low-intensity Questionnaire (Birth-focus) (TT–LI).	Mother/Baby	432	1	15/60	108	1,080
Postnatal Activities						
Infant Feeding Log (PB, EH, TT–HI, PBS).	Mother/Baby	1,106	1	20/60	369	3,688
Biological Sample Collection—Mother/Baby (PB, EH, TT–HI).	Mother/Baby	761	4	22.5/60	1,141	11,411
3-Month Interview (PB, EH, TT–HI, TT–LI, PBS).	Mother/Baby	1,518	1	20/60	506	5,061
6-Month Interview (PB, EH, TT–HI, PBS).	Mother/Baby	1,066	1	30/60	533	5,331
Physical Measures—Child Anthropometry (6-,12-, 24-Month) (PB, EH, TT–HI).	Baby/Child	701	3	20/60	701	7,014
Physical Measures—Child Blood Pressure (12-, 24-Month) (PB, EH, TT–HI).	Baby/Child	675	2	10/60	225	2,250
9-Month Interview (PB, EH, TT–HI, TT–LI, PBS).	Mother/Baby	1,428	1	10/60	238	2,381
12-Month Interview (PB, EH, TT–HI, PBS).	Mother/Baby	1,003	1	50/60	836	8,360
18-Month Interview (PB, EH, TT–HI, TT–LI, PBS).	Mother/Child	1,316	1	30/60	658	6,582
24-Month Interview (PB, EH, TT–HI, TT–LI, PBS).	Mother/Child	1,251	1	35/60	729	7,295
Core Questionnaire (PB, EH, TT–HI, TT–LI, PBS).	Mother/Child	1,188	1	30/60	594	5,940
30-Month Visit Interview (PB, EH, TT–HI, TT–LI, PBS).	Mother/Child	1,188	1	55/60	1,089	10,890
Total, Vanguard (Pilot) Study	.....	31,082	.....	.....	17,943	181,331
Total, Formative Research	.....	.....	.....	.....	4,847	48,473
Grand Total	.....	31,082	.....	.....	22,791	229,804

Request for Comments: Written comments and/or suggestions from the public and affected agencies are invited on one or more of the following points: (1) Whether the proposed collection of information is necessary for the proper performance of the function of the agency, including whether the information will have practical utility; (2) The accuracy of the agency's estimate of the burden of the proposed collection of information, including the validity of the methodology and assumptions used; (3) Ways to enhance the quality, utility, and clarity of the information collected; and (4) Ways to minimize the burden of the collection of information on those who are to respond, including the use of appropriate automated, electronic, mechanical, or other technological collection techniques or other forms of information technology.

Direct Comments to OMB: Written comments and/or suggestions regarding the item(s) contained in this notice, especially regarding the estimated public burden and associated response time, should be directed to Office of Management and Budget, Office of Information and Regulatory Affairs, Attn: NIH Desk Officer, by Email to *OIRA_submission@omb.eop.gov,* or by fax to (202) 395–6974. To request more information on the proposed project or to obtain a copy of the data collection plans and instruments, contact Ms. Jamelle E. Banks, Public Health Analyst, Office of Science Policy, Analysis and Communication, National Institute of Child Health and Human Development, 31 Center Drive, Room 2A18, Bethesda,

Maryland 20892, or call a non-toll free number (301) 496–1877 or Email your request, including your address to *banksj@mail.nih.gov.*

Comments Due Date: Comments regarding this information collection are best assured of having their full effect if received within 30 days of the date of this publication.

Dated: April 16, 2012.

Jamelle E. Banks,

Project Clearance Liaison, Office of Science Policy, Analysis and Communications, National Institute of Child Health and Human Development.

[FR Doc. 2012–10113 Filed 4–25–12; 8:45 am]

BILLING CODE 4140–01–P

DEPARTMENT OF HEALTH AND HUMAN SERVICES

National Institutes of Health

National Institute of Allergy and Infectious Diseases; Notice of Closed Meeting

Pursuant to section 10(d) of the Federal Advisory Committee Act, as amended (5 U.S.C. App.), notice is hereby given of the following meeting.

The meeting will be closed to the public in accordance with the provisions set forth in sections 552b(c)(4) and 552b(c)(6), Title 5 U.S.C., as amended. The grant applications and the discussions could disclose confidential trade secrets or commercial property such as patentable material, and personal information concerning individuals associated with the grant applications, the disclosure of which would constitute a clearly unwarranted invasion of personal privacy.

Name of Committee: National Institute of Allergy and Infectious Diseases Special Emphasis Panel; NIAID Investigator Initiated Program Project Applications.

Date: May 16, 2012.

Time: 12 p.m. to 4 p.m.

Agenda: To review and evaluate grant applications.

Place: National Institutes of Health, 6700B Rockledge Drive, Bethesda, MD 20817, (Telephone Conference Call).

Contact Person: Maja Maric, Ph.D., Scientific Review Officer, Scientific Review Program, Division of Extramural Activities, DHHS/NIH/NIAID, 6700B Rockledge Drive, Room 3266, Bethesda, MD 20892–7616, 301–451–2634, *maja.maric@nih.gov.*

(Catalogue of Federal Domestic Assistance Program Nos. 93.855, Allergy, Immunology, and Transplantation Research; 93.856, Microbiology and Infectious Diseases Research, National Institutes of Health, HHS)

Dated: April 19, 2012.

Jennifer S. Spaeth,

Director, Office of Federal Advisory Committee Policy.

[FR Doc. 2012–10089 Filed 4–25–12; 8:45 am]

BILLING CODE 4140–01–P

DEPARTMENT OF HEALTH AND HUMAN SERVICES

National Institutes of Health

Center for Scientific Review; Notice of Closed Meetings

Pursuant to section 10(d) of the Federal Advisory Committee Act, as amended (5 U.S.C. App.), notice is hereby given of the following meetings.

The meetings will be closed to the public in accordance with the provisions set forth in sections 552b(c)(4) and 552b(c)(6), Title 5 U.S.C., as amended. The grant applications and the discussions could disclose confidential trade secrets or commercial property such as patentable material, and personal information concerning individuals associated with the grant applications, the disclosure of which would constitute a clearly unwarranted invasion of personal privacy.

Name of Committee: Center for Scientific Review Special Emphasis Panel RFA–RM–11–016 Regional Comprehensive Metabolomics Resource Cores.

Date: May 15–16, 2012.

Time: 8 a.m. to 6 p.m.

Agenda: To review and evaluate grant applications.

Place: National Institutes of Health, 6701 Rockledge Drive, Bethesda, MD 20892 (Virtual Meeting).

Contact Person: James J Li, Ph.D., Scientific Review Officer, Center for Scientific Review, National Institutes of Health, 6701 Rockledge Drive, Room 5148, MSC 7849, Bethesda, MD 20892, 301–806–8065, *lijames@csr.nih.gov.*

Name of Committee: Center for Scientific Review Special Emphasis Panel PAR12–010 Smoking and Tobacco Revision Applications: Social Sciences and Population Studies.

Date: May 21–22, 2012.

Time: 8:30 a.m. to 12 p.m.

Agenda: To review and evaluate grant applications.

Place: Hotel Monaco Alexandria, 480 King Street, Alexandria, VA 22314.

Contact Person: Suzanne Ryan, Ph.D., Scientific Review Officer, Center for Scientific Review.

Place: National Institutes of Health, 6701 Rockledge Drive, Room 3139, MSC 7770, Bethesda, MD 20892, (301) 435–1712, *ryansj@csr.nih.gov.*

Name of Committee: Center for Scientific Review Special Emphasis Panel Social Sciences and Population Studies: Second Panel.

Date: May 21–22, 2012.

Time: 8:30 a.m. to 12 p.m.

Agenda: To review and evaluate grant applications.

Place: Hotel Monaco Alexandria, 480 King Street, Alexandria, VA 22314.

Contact Person: Suzanne Ryan, Ph.D., Scientific Review Officer, Center for Scientific Review, National Institutes of Health, 6701 Rockledge Drive, Room 3139, MSC 7770, Bethesda, MD 20892, (301) 435–1712, *ryansj@csr.nih.gov.*

Name of Committee: Center for Scientific Review Special Emphasis Panel Member Conflict: Myocardial Metabolism, Ischemia and Heart Failure.

Date: May 22, 2012.

Time: 2 p.m. to 3:30 p.m.

Agenda: To review and evaluate grant applications.

Place: National Institutes of Health, 6701 Rockledge Drive, Bethesda, MD 20892, (Telephone Conference Call).

Contact Person: Yuanna Cheng, MD, Ph.D., Scientific Review Officer, Center for Scientific Review, National Institutes of Health, 6701 Rockledge Drive, Room 4138, MSC 7814, Bethesda, MD 20892, (301) 435–1195, *Chengy5@csr.nih.gov.*

(Catalogue of Federal Domestic Assistance Program Nos. 93.306, Comparative Medicine; 93.333, Clinical Research, 93.306, 93.333, 93.337, 93.393–93.396, 93.837–93.844, 93.846–93.878, 93.892, 93.893, National Institutes of Health, HHS)

Dated: April 19, 2012.

Jennifer S. Spaeth,

Director, Office of Federal Advisory Committee Policy.

[FR Doc. 2012–10088 Filed 4–25–12; 8:45 am]

BILLING CODE 4140–01–P

DEPARTMENT OF HEALTH AND HUMAN SERVICES

National Institutes of Health

Center for Scientific Review; Notice of Closed Meeting

Pursuant to section 10(d) of the Federal Advisory Committee Act, as amended (5 U.S.C. App.), notice is hereby given of the following meeting.

The meeting will be closed to the public in accordance with the provisions set forth in sections 552b(c)(4) and 552b(c)(6), Title 5 U.S.C., as amended. The grant applications and the discussions could disclose confidential trade secrets or commercial property such as patentable material, and personal information concerning individuals associated with the grant applications, the disclosure of which would constitute a clearly unwarranted invasion of personal privacy.

Name of Committee: Center for Scientific Review Special Emphasis Panel; Member Conflict: Risk, Prevention and Health Behavior.

Date: May 9–10, 2012.

Time: 9 a.m. to 5 p.m.

Agenda: To review and evaluate grant applications.

Place: National Institutes of Health, 6701 Rockledge Drive, Bethesda, MD 20892, (Virtual Meeting).

Contact Person: Kristen Prentice, Ph.D., Scientific Review Officer, Center for Scientific Review, National Institutes of Health, 6701 Rockledge Drive, Room 3112, MSC 7808, Bethesda, MD 20892, 301–496–0726, *prenticekj@mail.nih.gov*.

This notice is being published less than 15 days prior to the meeting due to the timing limitations imposed by the review and funding cycle.

(Catalogue of Federal Domestic Assistance Program Nos. 93.306, Comparative Medicine; 93.333, Clinical Research, 93.306, 93.333, 93.337, 93.393–93.396, 93.837–93.844, 93.846–93.878, 93.892, 93.893, National Institutes of Health, HHS)

Dated: April 20, 2012.

Jennifer S. Spaeth,

Director, Office of Federal Advisory Committee Policy.

[FR Doc. 2012–10087 Filed 4–25–12; 8:45 am]

BILLING CODE 4140–01–P

DEPARTMENT OF HEALTH AND HUMAN SERVICES

National Institutes of Health

National Library of Medicine; Notice of Closed Meeting

Pursuant to section 10(d) of the Federal Advisory Committee Act, as amended (5 U.S.C. App), notice is hereby given of the following meeting.

The meeting will be closed to the public in accordance with the provisions set forth in sections 552b(c)(4) and 552b(c)(6), Title 5 U.S.C., as amended. The grant applications and the discussions could disclose confidential trade secrets or commercial property such as patentable materials, and personal information concerning individuals associated with the grant applications, the disclosure of which would constitute a clearly unwarranted invasion of personal privacy.

Name of Committee: National Library of Medicine Special Emphasis Panel; Scholarly Works G13.

Date: July 11, 2012.

Time: 9 a.m. to 6 p.m.

Agenda: To review and evaluate grant applications.

Place: National Library of Medicine, 6705 Rockledge Drive, Suite 301, Bethesda, MD 20817.

Contact Person: Zoe H. Huang, MD, Scientific Review Officer, Extramural Programs, National Library of Medicine, NIH, 6705 Rockledge Drive, Suite 301, Bethesda, MD 20892–7968, 301–594–4937, *huangz@mail.nih.gov*.

(Catalogue of Federal Domestic Assistance Program No. 93.879, Medical Library Assistance, National Institutes of Health, HHS)

Dated: April 20, 2012.

Jennifer S. Spaeth,

Director, Office of Federal Advisory Committee Policy.

[FR Doc. 2012–10086 Filed 4–25–12; 8:45 am]

BILLING CODE 4140–01–P

DEPARTMENT OF HEALTH AND HUMAN SERVICES

National Institutes of Health

Office of the Director, National Institutes of Health; Notice of Meeting

Pursuant to section 10(d) of the Federal Advisory Committee Act, as amended (5 U.S.C. App.), notice is hereby given of a meeting of the Council of Councils.

The meeting will be open to the public as indicated below, with attendance limited to space available. Individuals who plan to attend and need special assistance, such as sign language interpretation or other reasonable accommodations, should notify the Contact Person listed below in advance of the meeting.

The meeting will be closed to the public in accordance with the provisions set forth in sections 552b(c)(4) and 552b(c)(6), Title 5 U.S.C., as amended. The grant applications and discussions could disclose confidential trade secrets or commercial property such as patentable material, and personal information concerning individuals associated with the grant applications, the disclosure of which would constitute a clearly unwarranted invasion of personal privacy.

Name of Committee: Council of Councils.

Date: June 5, 2012.

Open: 8:30 a.m. to 3 p.m.

Agenda: Call to Order, DPCPSI and NIH Updates, Scientific Presentations and Concept Clearance and Discussion.

Place: National Institutes of Health, Building 31, 31 Center Drive, Conference Room 10, Bethesda, MD 20892.

Closed: 3:15 p.m. to 4:15 p.m.

Agenda: To review and evaluate grant applications.

Place: National Institutes of Health, Building 31, 31 Center Drive, Conference Room 10, Bethesda, MD 20892.

Open: 4:15 p.m. to 5 p.m.

Agenda: Update on Working Group on Chimpanzees in NIH-Supported Research and Update on NIH Office of Science Education & STEM Activities Government Wide.

Place: National Institutes of Health, Building 31, 31 Center Drive, Conference Room 10, Bethesda, MD 20892.

Contact Person: Robin Kawazoe, Executive Secretary, Division of Program Coordination, Planning, and Strategic Initiatives, Office of the Director, NIH, Building 1, Room 260B, Bethesda, MD 20892, *kawazoer@mail.nih.gov*

Any interested person may file written comments with the committee by forwarding the statement to the Contact Person listed on this notice. The statement should include the name, address, telephone number and when applicable, the business or professional affiliation of the interested person. Information is also available on the Council of Council's home page at *http://dpcpsi.nih.gov/council/,* where an agenda and proposals to be discussed will be posted before the meeting date.

In the interest of security, NIH has instituted stringent procedures for entrance onto the NIH campus. All visitor vehicles, including taxicabs, hotel, and airport shuttles will be inspected before being allowed on campus. Visitors will be asked to show one form of identification (for example, a government-issued photo ID, driver's license, or passport) and to state the purpose of their visit.

(Catalogue of Federal Domestic Assistance Program Nos. 93.14, Intramural Research Training Award; 93.22, Clinical Research Loan Repayment Program for Individuals from Disadvantaged Backgrounds; 93.232, Loan Repayment Program for Research Generally; 93.39, Academic Research Enhancement Award; 93.936, NIH Acquired Immunodeficiency Syndrome Research Loan Repayment Program; 93.187, Undergraduate Scholarship Program for Individuals from Disadvantaged Backgrounds, National Institutes of Health, HHS)

Dated: April 20, 2012.

Jennifer S. Spaeth,

Director, Office of Federal Advisory Committee Policy.

[FR Doc. 2012–10084 Filed 4–25–12; 8:45 am]

BILLING CODE 4140–01–P

DEPARTMENT OF HEALTH AND HUMAN SERVICES

National Institutes of Health

National Cancer Institute; Notice of Closed Meeting

Pursuant to section 10(d) of the Federal Advisory Committee Act, as amended (5 U.S.C. Appendix 2) notice is hereby given of the following meeting.

The meeting will be closed to the public in accordance with the provisions set forth in sections 552b(c)(4) and 552b(c)(6), Title 5 U.S.C., as amended. The purpose of this meeting is to evaluate requests for preclinical development resources, biologics, clinical assays and other developmental programs for potential new therapeutics for the treatment of cancer. The outcome of the evaluation will provide information to internal NCI committees that will decide whether

NCI should support requests and make available contract resources for development of the potential therapeutic to improve the treatment of various forms of cancer. The research proposals and the discussions could disclose confidential trade secrets or commercial property such as patentable material and personal information concerning individuals associated with the proposed research projects, the disclosure of which would constitute a clearly unwarranted invasion of personal privacy.

Name of Committee: National Cancer Institute Special Emphasis Panel; Clinical Assay Development Program (CADP).

Date: July 31, 2012.

Time: 8 a.m.–3 p.m.

Agenda: To review grant applications for the CADP.

Place: National Cancer Institute, NIH, Executive Plaza North, 6130 Executive Boulevard, Room J, Rockville, MD 20852.

Contact Person: Tracy G. Lively, Ph.D., Executive Secretary, Cancer Diagnosis Program (CADP), National Cancer Institute, NIH, 6130 Executive Boulevard, EPN/6035A, Bethesda, MD 20892, 301–496–8639, *livelyt@mail.nih.gov.*

(Catalogue of Federal Domestic Assistance Program Nos. 93.392, Cancer Construction; 93.393, Cancer Cause and Prevention Research; 93.394, Cancer Detection and Diagnosis Research; 93.395, Cancer Treatment Research; 93.396, Cancer Biology Research; 93.397, Cancer Centers Support; 93.398, Cancer Research Manpower; 93.399, Cancer Control, National Institutes of Health, HHS)

Dated: April 19, 2012.

Jennifer S. Spaeth,

Director, Office of Federal Advisory Committee Policy.

[FR Doc. 2012–10083 Filed 4–25–12; 8:45 am]

BILLING CODE 4140–01–P

DEPARTMENT OF HEALTH AND HUMAN SERVICES

National Institutes of Health

National Cancer Institute; Notice of Closed Meeting

Pursuant to section 10(d) of the Federal Advisory Committee Act, as amended (5 U.S.C. App.), notice is hereby given of the following meeting.

The meeting will be closed to the public in accordance with the provisions set forth in sections 552b(c)(4) and 552b(c)(6), Title 5 U.S.C., as amended. The grant applications and the discussions could disclose confidential trade secrets or commercial property such as patentable material, and personal information concerning individuals associated with the grant applications, the disclosure of which would constitute a clearly unwarranted invasion of personal privacy.

Name of Committee: National Cancer Institute Initial Review Group; Subcommittee I—Career Development.

Date: June 12–13, 2012.

Time: 8 a.m. to 1 p.m.

Agenda: To review and evaluate grant applications.

Place: Hyatt Regency Bethesda, One Bethesda Metro Center, 7400 Wisconsin Avenue, Bethesda, MD 20814.

Contact Person: Sergei Radaev, Ph.D., Scientific Review Officer, Resources and Training Review Branch, Division of Extramural Activities, National Cancer Institute, NIH, 6116 Executive Blvd., RM 8113, Bethesda, MD 20892, 301–435–5655, *sradaev@mail.nih.gov.*

Information is also available on the Institute's/Center's home page: *http://deainfo.nci.nih.gov/advisory/irg/irg.htm,* where an agenda and any additional information for the meeting will be posted when available.

(Catalogue of Federal Domestic Assistance Program Nos. 93.392, Cancer Construction; 93.393, Cancer Cause and Prevention Research; 93.394, Cancer Detection and Diagnosis Research; 93.395, Cancer Treatment Research; 93.396, Cancer Biology Research; 93.397, Cancer Centers Support; 93.398, Cancer Research Manpower; 93.399, Cancer Control, National Institutes of Health, HHS)

Dated: April 19, 2012.

Jennifer S. Spaeth,

Director, Office of Federal Advisory Committee Policy.

[FR Doc. 2012–10082 Filed 4–25–12; 8:45 am]

BILLING CODE 4140–01–P

DEPARTMENT OF HEALTH AND HUMAN SERVICES

National Institutes of Health

National Institute on Aging; Notice of Closed Meetings

Pursuant to section 10(d) of the Federal Advisory Committee Act, as amended (5 U.S.C. App.), notice is hereby given of the following meetings.

The meetings will be closed to the public in accordance with the provisions set forth in sections 552b(c)(4) and 552b(c)(6), Title 5 U.S.C., as amended. The grant applications and the discussions could disclose confidential trade secrets or commercial property such as patentable material, and personal information concerning individuals associated with the grant applications, the disclosure of which would constitute a clearly unwarranted invasion of personal privacy.

Name of Committee: National Institute on Aging Initial Review Group; Behavior and Social Science of Aging Review Committee.

Date: June 6–7, 2012.

Time: 3 p.m. to 12 p.m.

Agenda: To review and evaluate grant applications.

Place: Marina del Rey Hotel, 13534 Bali Way, Marina del Rey, CA 90292.

Contact Person: Jeannette L. Johnson, Ph.D., Scientific Review Officer, National Institutes on Aging, National Institutes of Health, 7201 Wisconsin Avenue, Suite 2C212, Bethesda, MD 20892, 301–402–7705, *johnsonj9@nia.nih.gov.*

Name of Committee: National Institute on Aging Initial Review Group; Biological Aging Review Committee.

Date: June 6–7, 2012.

Time: 3 p.m. to 6 p.m.

Agenda: To review and evaluate grant applications.

Place: Marina del Rey Hotel, 13534 Bali Way, Marina del Rey, CA 90292.

Contact Person: Bita Nakhai, Ph.D., Scientific Review Branch, National Institute on Aging, Gateway Bldg., 2C212, 7201 Wisconsin Avenue, Bethesda, MD 20814, 301–402–7701, *nakhaib@nia.nih.gov*

Name of Committee: National Institute on Aging Initial Review Group; Clinical Aging Review Committee.

Date: June 7–8, 2012.

Time: 12 p.m. to 11 a.m.

Agenda: To review and evaluate grant applications.

Place: Marina del Rey Hotel, 13534 Bali Way, Marina del Rey, CA 90292.

Contact Person: Alicja L. Markowska, Ph.D., DSC, National Institute on Aging, National Institutes of Health, Gateway Building 2C212, 7201 Wisconsin Avenue, Bethesda, MD 20892, 301–496–9666, *markowsa@nia.nih.gov.*

(Catalogue of Federal Domestic Assistance Program Nos. 93.866, Aging Research, National Institutes of Health, HHS)

Dated: April 19, 2012.

Jennifer S. Spaeth,

Director, Office of Federal Advisory Committee Policy.

[FR Doc. 2012–10081 Filed 4–25–12; 8:45 am]

BILLING CODE 4140–01–P

DEPARTMENT OF HEALTH AND HUMAN SERVICES

National Institutes of Health

National Cancer Institute; Notice of Closed Meetings

Pursuant to section 10(d) of the Federal Advisory Committee Act, as amended (5 U.S.C. App.), notice is hereby given of the following meetings.

The meetings will be closed to the public in accordance with the provisions set forth in sections 552b(c)(4) and 552b(c)(6), Title 5 U.S.C., as amended. The grant applications/contracts and the discussions could disclose confidential trade secrets or commercial property such as patentable material, and personal information

concerning individuals associated with the grant applications, the disclosure of which would constitute a clearly unwarranted invasion of personal privacy.

Name of Committee: National Cancer Institute Special Emphasis Panel; SBIR Topic 255 Development of Anticancer Agents Meeting I.
Date: May 14, 2012.
Time: 12 p.m. to 3 p.m.
Agenda: To review and evaluate contract proposals.
Place: National Institutes of Health, 6116 Executive Boulevard, Room 611, Rockville, MD 20852, (Telephone Conference Call).
Contact Person: Shakeel Ahmad, Ph.D., Scientific Review Officer, Research Programs Review Branch, Division of Extramural Activities, National Cancer Institute, NIH, 6116 Executive Boulevard, Room 8139, Bethesda, MD 20892–8328, (301) 594–0114, *ahmads@mail.nih.gov.*

Name of Committee: National Cancer Institute Special Emphasis Panel; SBIR Topic 255 Development of Anticancer Agents Meeting II.
Date: May 15, 2012.
Time: 12 p.m. to 3 p.m.
Agenda: To review and evaluate contract proposals.
Place: National Institutes of Health, 6116 Executive Boulevard, Room 210, Rockville, MD 20852, (Telephone Conference Call).
Contact Person: Virginia P. Wray, Ph.D., Deputy Chief, Research Programs Review Branch, Research Programs Review Branch, Division of Extramural Activities, National Cancer Institute, NIH, 6116 Executive Blvd., Room 8125, Bethesda, MD 20892–8328, 301–496–9236, *wrayv@mail.nih.gov.*

Name of Committee: National Cancer Institute Special Emphasis Panel; SPORE in Breast, Prostate and Thyroid Cancers.
Date: May 23–24, 2012.
Time: 8 a.m. to 1 p.m.
Agenda: To review and evaluate grant applications.
Place: Bethesda North Marriott Hotel & Conference Center, Montgomery County Conference Center Facility, 5701 Marinelli Road, North Bethesda, MD 20852.
Contact Person: Wlodek Lopaczynski, MD, Ph.D., Scientific Review Officer, Research Programs Review Branch, Division of Extramural Activities, National Cancer Institute, NIH, 6116 Executive Blvd., Room 8131, Bethesda, MD 20892, 301–594–1402, *lopacw@mail.nih.gov.*

Name of Committee: National Cancer Institute Special Emphasis Panel; NCI Program Project Review Panel Meeting IV.
Date: June 11–12, 2012.
Time: 3 p.m. to 6 p.m.
Agenda: To review and evaluate grant applications.
Place: Hilton Washington/Rockville, 1750 Rockville Pike, Rockville, MD 20852.
Contact Person: Majed M. Hamawy, Ph.D., Scientific Review Officer, Research Programs Review Branch, Division of Extramural Activities, National Cancer Institute, NIH, 6116 Executive Boulevard, Room 8135, Bethesda, MD 20892, 301–594–5659, *mh101v@nih.gov.*

Name of Committee: National Cancer Institute Special Emphasis Panel; NCI Program Project Review Panel Meeting II.
Date: June 13–14, 2012.
Time: 8 a.m. to 1 p.m.
Agenda: To review and evaluate grant applications.
Place: Doubletree Hotel Bethesda, (Formerly Holiday Inn Select), 8120 Wisconsin Avenue, Bethesda, MD 20814.
Contact Person: Delia Tang, MD, Scientific Review Officer, Research Programs Review Branch, Division of Extramural Activities, National Cancer Institute, NIH, 6116 Executive Blvd., Room 8123, Bethesda, MD 20892, 301–496–2330, *tangd@mail.nih.gov.*

Name of Committee: National Cancer Institute Special Emphasis Panel; NCI Program Project Review Panel Meeting I.
Date: June 14–15, 2012.
Time: 8 a.m. to 11 a.m.
Agenda: To review and evaluate grant applications.
Place: DoubleTree Hotel and Executive Meeting Center; 8120 Wisconsin Ave., Bethesda, MD 20814.
Contact Person: David G. Ransom, Ph.D., Scientific Review Officer, Research Programs Review Branch, Division of Extramural Activities, National Cancer Institute, NIH, 6116 Executive Blvd., Room 8133, Bethesda, MD 20892–8328, 301–451–4757, *david.ransom@nih.gov.*

Name of Committee: National Cancer Institute Special Emphasis Panel; Small Grants Program for Cancer Epidemiology.
Date: June 21–22, 2012.
Time: 8:30 a.m. to 5:30 p.m.
Agenda: To review and evaluate grant applications.
Place: Hilton Washington/Rockville, 1750 Rockville Pike, Rockville, MD 20852.
Contact Person: Joyce C. Pegues, Ph.D., Scientific Review Officer, Special Review and Logistics Branch, Division of Extramural Activities, NIH National Cancer Institute, NIH, 6116 Executive Boulevard, Room 7149, Bethesda, MD 20892–8329, 301–594–1286, *peguesj@mail.nih.gov.*

Information is also available on the Institute's/Center's home page: *http://deainfo.nci.nih.gov/advisory/sep/sep.htm,* where an agenda and any additional information for the meeting will be posted when available.

(Catalogue of Federal Domestic Assistance Program Nos. 93.392, Cancer Construction; 93.393, Cancer Cause and Prevention Research; 93.394, Cancer Detection and Diagnosis Research; 93.395, Cancer Treatment Research; 93.396, Cancer Biology Research; 93.397, Cancer Centers Support; 93.398, Cancer Research Manpower; 93.399, Cancer Control, National Institutes of Health, HHS)

Dated: April 19, 2012.

Jennifer S. Spaeth,

Director, Office of Federal Advisory Committee Policy.

[FR Doc. 2012–10079 Filed 4–25–12; 8:45 am]

BILLING CODE 4140–01–P

DEPARTMENT OF HEALTH AND HUMAN SERVICES

National Institutes of Health

National Institute of Mental Health; Notice of Closed Meetings

Pursuant to section 10(d) of the Federal Advisory Committee Act, as amended (5 U.S.C. App.), notice is hereby given of the following meetings.

The meetings will be closed to the public in accordance with the provisions set forth in sections 552b(c)(4) and 552b(c)(6), Title 5 U.S.C., as amended. The contract proposals and the discussions could disclose confidential trade secrets or commercial property such as patentable material, and personal information concerning individuals associated with the contract proposals, the disclosure of which would constitute a clearly unwarranted invasion of personal privacy.

Name of Committee: National Institute of Mental Health Special Emphasis Panel; Fast Fail—Experimental Medicines Contracts—Mood and Anxiety Disorders.
Date: May 22, 2012.
Time: 1 p.m. to 6 p.m.
Agenda: To review and evaluate contract proposals.
Place: National Institutes of Health, Neuroscience Center, 6001 Executive Boulevard, Rockville, MD 20852, (Telephone Conference Call).
Contact Person: David I. Sommers, Ph.D., Scientific Review Officer, Division of Extramural Activities, National Institute of Mental Health, National Institutes of Health, 6001 Executive Blvd., Room 6154, MSC 9606, Bethesda, MD 20892–9606, 301–443–7861, *dsommers@mail.nih.gov.*

Name of Committee: National Institute of Mental Health Special Emphasis Panel; Fast Fail—Experimental Medicines Contracts—Autism.
Date: May 24, 2012.
Time: 1 p.m. to 6 p.m.
Agenda: To review and evaluate contract proposals
Place: National Institutes of Health, Neuroscience Center, 6001 Executive Boulevard, Rockville, MD 20852, (Telephone Conference Call).
Contact Person: David I. Sommers, Ph.D., Scientific Review Officer, Division of Extramural Activities, National Institute of Mental Health, National Institutes of Health, 6001 Executive Blvd., Room 6154, MSC 9606, Bethesda, MD 20892–9606, 301–443–7861, *dsommers@mail.nih.gov.*

Name of Committee: National Institute of Mental Health Special Emphasis Panel; Fast Fail—Experimental Medicines Contracts—Psychotic Spectrum.
Date: May 25, 2012.
Time: 1 p.m. to 6 p.m.
Agenda: To review and evaluate contract proposals.
Place: National Institutes of Health, Neuroscience Center, 6001 Executive

Boulevard, Rockville, MD 20852, (Telephone Conference Call).

Contact Person: David I. Sommers, Ph.D., Scientific Review Officer, Division of Extramural Activities, National Institute of Mental Health, National Institutes of Health, 6001 Executive Blvd., Room 6154, MSC 9606, Bethesda, MD 20892–9606, 301–443–7861, *dsommers@mail.nih.gov.*

(Catalogue of Federal Domestic Assistance Program Nos. 93.242, Mental Health Research Grants; 93.281, Scientist Development Award, Scientist Development Award for Clinicians, and Research Scientist Award; 93.282, Mental Health National Research Service Awards for Research Training, National Institutes of Health, HHS)

Dated: April 18, 2012.

Jennifer S. Spaeth,

Director, Office of Federal Advisory Committee Policy.

[FR Doc. 2012–10140 Filed 4–25–12; 8:45 am]

BILLING CODE 4140–01–P

DEPARTMENT OF HEALTH AND HUMAN SERVICES

National Institutes of Health

National Center for Complementary & Alternative Medicine; Notice of Closed Meeting

Pursuant to section 10(d) of the Federal Advisory Committee Act, as amended (5 U.S.C. App.), notice is hereby given of the following meeting.

The meeting will be closed to the public in accordance with the provisions set forth in sections 552b(c)(4) and 552b(c)(6), Title 5 U.S.C., as amended. The grant applications and the discussions could disclose confidential trade secrets or commercial property such as patentable material, and personal information concerning individuals associated with the grant applications, the disclosure of which would constitute a clearly unwarranted invasion of personal privacy.

Name of Committee: National Center for Complementary and Alternative Medicine Special Emphasis Panel; Education, conferences, training.

Date: June 22, 2012.

Time: 8 a.m. to 7 p.m.

Agenda: To review and evaluate grant applications.

Place: Marriott Courtyard Gaithersburg Washingtonian Ctr, 204 Boardwalk Place, Gaithersburg, MD 20878.

Contact Person: Peter Kozel, Ph.D., Scientific Review Officer, NCCAM, 6707 Democracy Boulevard, Suite 401, Bethesda, MD 20892–5475, 301–496–8004, *kozelp@mail.nih.gov.*

Name of Committee: National Center for Complementary and Alternative Medicine Special Emphasis Panel; Natural products RFA.

Date: July 19–20, 2012.

Time: 8 a.m. to 5 p.m.

Agenda: To review and evaluate grant applications.

Place: Bethesda North Marriott Hotel & Conference Center, 5701 Marinelli Road, Bethesda, MD 20852.

Contact Person: Martina Schmidt, Ph.D., Scientific Review Officer, Office of Scientific Review, National Center for Complementary & Alternative Medicine, NIH, 6707 Democracy Blvd., Suite 401, Bethesda, MD 20892, 301–594–3456, *schmidma@mail.nih.gov.*

(Catalogue of Federal Domestic Assistance Program Nos. 93.213, Research and Training in Complementary and Alternative Medicine, National Institutes of Health, HHS)

Dated: April 20, 2012.

Jennifer S. Spaeth,

Director, Office of Federal Advisory Committee Policy.

[FR Doc. 2012–10127 Filed 4–25–12; 8:45 am]

BILLING CODE 4140–01–P

DEPARTMENT OF HEALTH AND HUMAN SERVICES

National Institutes of Health

National Institute of Neurological Disorders and Stroke; Notice of Closed Meetings

Pursuant to section 10(d) of the Federal Advisory Committee Act, as amended (5 U.S.C. App.), notice is hereby given of the following meetings.

The meetings will be closed to the public in accordance with the provisions set forth in sections 552b(c)(4) and 552b(c)(6), Title 5 U.S.C., as amended. The grant applications and the discussions could disclose confidential trade secrets or commercial property such as patentable materials, and personal information concerning individuals associated with the grant applications, the disclosure of which would constitute a clearly unwarranted invasion of personal privacy.

Name of Committee: National Institute of Neurological Disorders and Stroke Initial Review Group; Neurological Sciences and Disorders C.

Date: June 18–19, 2012

Time: 8 a.m. to 6 p.m.

Agenda: To review and evaluate grant applications.

Place: Mayflower Park Hotel, 405 Olive Way, Seattle, WA 98101.

Contact Person: William C. Benzing, Ph.D., Scientific Review Officer, Scientific Review Branch, Division of Extramural Research, NINDS, NIH, NSC, 6001 Executive Blvd., Suite 3204, MSC 9529, Bethesda, MD 20892–9529, 301–496–0660, *Benzingw@mail.nih.gov.*

Name of Committee: Neurological Sciences Training Initial Review Group; NST–2 Subcommittee.

Date: June 25–26, 2012.

Time: 8 a.m. to 5 p.m.

Agenda: To review and evaluate grant applications.

Place: The Fairmont Washington, DC, 2401 M Street NW., Washington, DC 20037.

Contact Person: JoAnn McConnell, Ph.D., Scientific Review Officer, Scientific Review Branch, Division of Extramural Research, NINDS, NIH, NSC, 6001 Executive Blvd., Suite 3208, MSC 9529, Bethesda, MD 20892–9529, 301–496–5324, *McConnej@ninds.nih.gov.*

Name of Committee: National Institute of Neurological Disorders and Stroke Initial Review Group; Neurological Sciences and Disorders A.

Date: June 27–28, 2012.

Time: 8 a.m. to 6 p.m.

Agenda: To review and evaluate grant applications.

Place: Churchill Hotel, 1914 Connecticut Avenue NW., Washington, DC 20009.

Contact Person: Richard D. Crosland, Ph.D., Scientific Review Officer, Scientific Review Branch, Division of Extramural Research, NINDS, NIH, NSC, 6001 Executive Blvd., Suite 3208, MSC 9529, Bethesda, MD 20892–9529, 301–496–5324, *McConnej@ninds.nih.gov.*

(Catalogue of Federal Domestic Assistance Program Nos. 93.853, Clinical Research Related to Neurological Disorders; 93.854, Biological Basis Research in the Neurosciences, National Institutes of Health, HHS)

Dated: April 20, 2012.

Jennifer S. Spaeth,

Director, Office of Federal Advisory Committee Policy.

[FR Doc. 2012–10126 Filed 4–25–12; 8:45 am]

BILLING CODE 4140–01–P

DEPARTMENT OF HEALTH AND HUMAN SERVICES

National Institutes of Health

National Institute on Deafness and Other Communication Disorders; Notice of Closed Meeting

Pursuant to section 10(d) of the Federal Advisory Committee Act, as amended (5 U.S.C. App.), notice is hereby given of the following meeting.

The meeting will be closed to the public in accordance with the provisions set forth in sections 552b(c)(4) and 552b(c)(6), Title 5 U.S.C., as amended. The grant applications and the discussions could disclose confidential trade secrets or commercial property such as patentable material, and personal information concerning individuals associated with the grant applications, the disclosure of which would constitute a clearly unwarranted invasion of personal privacy.

Name of Committee: National Institute on Deafness and Other Communication

Disorders Special Emphasis Panel; NIDCD SBIR and STTR Application Review.

Date: May 15, 2012.

Time: 11 a.m. to 2 p.m.

Agenda: To review and evaluate grant applications.

Place: National Institutes of Health, 6120 Executive Blvd., Rockville, MD 20852, (Telephone Conference Call).

Contact Person: Shiguang Yang, DVM, Ph.D. Scientific Review Officer Division of Extramural Activities NIDCD, NIH, 6120 Executive Blvd., Bethesda, MD 20892, 301–496–8683.

(Catalogue of Federal Domestic Assistance Program Nos. 93.173, Biological Research Related to Deafness and Communicative Disorders, National Institutes of Health, HHS)

Dated: April 20, 2012.

Jennifer S. Spaeth,

Director, Office of Federal Advisory Committee Policy.

[FR Doc. 2012–10125 Filed 4–25–12; 8:45 am]

BILLING CODE 4140–01–P

DEPARTMENT OF HEALTH AND HUMAN SERVICES

National Institutes of Health

Center for Scientific Review; Notice of Closed Meetings

Pursuant to section 10(d) of the Federal Advisory Committee Act, as amended (5 U.S.C. App.), notice is hereby given of the following meetings.

The meetings will be closed to the public in accordance with the provisions set forth in sections 552b(c)(4) and 552b(c)(6), Title 5 U.S.C., as amended. The grant applications and the discussions could disclose confidential trade secrets or commercial property such as patentable material, and personal information concerning individuals associated with the grant applications, the disclosure of which would constitute a clearly unwarranted invasion of personal privacy.

Name of Committee: Center for Scientific Review Special Emphasis Panel; PAR Panel: Translational Research in Pediatric and Obstetric Pharmacology (PAR–11–246).

Date: May 22, 2012.

Time: 12:30 p.m. to 5 p.m.

Agenda: To review and evaluate grant applications.

Place: National Institutes of Health, 6701 Rockledge Drive, Bethesda, MD 20892, (Telephone Conference Call).

Contact Person: John Bleasdale, Ph.D., Scientific Review Officer, Center for Scientific Review, National Institutes of Health, 6701 Rockledge Drive, Room 6170, MSC 7892, Bethesda, MD 20892, 301–435–4514, *bleasdaleje@csr.nih.gov.*

Name of Committee: Immunology Integrated Review Group; Cellular and Molecular Immunology—B Study Section.

Date: May 23–24, 2012.

Time: 8 a.m. to 5 p.m.

Agenda: To review and evaluate grant applications.

Place: Residence Inn Bethesda, 7335 Wisconsin Avenue, Bethesda, MD 20814.

Contact Person: Betty Hayden, Ph.D., Scientific Review Officer, Center for Scientific Review, National Institutes of Health, 6701 Rockledge Drive, Room 4206, MSC 7812, Bethesda, MD 20892, 301–435–1223, *haydenb@csr.nih.gov.*

Name of Committee: Risk, Prevention and Health Behavior Integrated Review Group; Psychosocial Risk and Disease Prevention Study Section.

Date: May 23–24, 2012.

Time: 8 a.m. to 6 p.m.

Agenda: To review and evaluate grant applications.

Place: Hyatt Regency Bethesda, One Bethesda Metro Center, 7400 Wisconsin Avenue, Bethesda, MD 20814.

Contact Person: Stacey FitzSimmons, Ph.D., Scientific Review Officer, Center for Scientific Review, National Institutes of Health, 6701 Rockledge Drive, Room 3114, MSC 7808, Bethesda, MD 20892, 301–451–9956, *fitzsimmonss@csr.nih.gov.*

(Catalogue of Federal Domestic Assistance Program Nos. 93.306, Comparative Medicine; 93.333, Clinical Research, 93.306, 93.333, 93.337, 93.393–93.396, 93.837–93.844, 93.846–93.878, 93.892, 93.893, National Institutes of Health, HHS)

Dated: April 19, 2012.

Jennifer S. Spaeth,

Director, Office of Federal Advisory Committee Policy.

[FR Doc. 2012–10124 Filed 4–25–12; 8:45 am]

BILLING CODE 4140–01–P

DEPARTMENT OF HEALTH AND HUMAN SERVICES

National Institutes of Health

National Institute of Biomedical Imaging and Bioengineering Notice of Closed Meeting

Pursuant to section 10(d) of the Federal Advisory Committee Act, as amended (5 U.S.C. App.), notice is hereby given of a meeting of the Board of Scientific Counselors, National Institute of Biomedical Imaging and Bioengineering.

The meeting will be closed to the public as indicated below in accordance with the provisions set forth in section 552b(c)(6), Title 5 U.S.C., as amended for the review, discussion, and evaluation of individual intramural programs and projects conducted by the National Institute of Biomedical Imaging and Bioengineering, including consideration of personal qualifications and performance, and the competence of individual investigators, the disclosure of which would constitute a clearly unwarranted invasion of personal privacy.

Name of Committee: Board of Scientific Counselors, National Institute of Biomedical Imaging and Bioengineering, NIBIB Intramural Board of Scientific Counselors.

Date: June 3–5, 2012.

Time: 7 p.m. to 12 p.m.

Agenda: To review and evaluate personal qualifications and performance, and competence of individual investigators.

Place: National Institutes of Health, Lawton Chiles International House, Bethesda, MD 20892.

Contact Person: Henry Eden, Deputy Director, IRP, National Institute of Biomedical Imaging and Bioengineering, National Institutes of Health, Bethesda, MD 20892, 301–435–1953, *edenh@mail.nih.gov.*

Dated: April 19, 2012.

Jennifer Spaeth,

Director, Office of Federal Advisory Committee Policy.

[FR Doc. 2012–10143 Filed 4–25–12; 8:45 am]

BILLING CODE 4140–01–P

DEPARTMENT OF HEALTH AND HUMAN SERVICES

National Institutes of Health

National Institute of Mental Health Notice of Meeting

Pursuant to section 10(d) of the Federal Advisory Committee Act, as amended (5 U.S.C. App.), notice is hereby given of a meeting of the National Advisory Mental Health Council.

The meeting will be open to the public as indicated below, with attendance limited to space available. Individuals who plan to attend and need special assistance, such as sign language interpretation or other reasonable accommodations, should notify the Contact Person listed below in advance of the meeting.

The meeting will be closed to the public in accordance with the provisions set forth in sections 552b(c)(4) and 552b(c)(6), Title 5 U.S.C., as amended. The grant applications and the discussions could disclose confidential trade secrets or commercial property such as patentable material, and personal information concerning individuals associated with the grant applications, the disclosure of which would constitute a clearly unwarranted invasion of personal privacy.

Name of Committee: National Advisory Mental Health Council.

Date: May 17, 2012.

Open: 8:30 a.m. to 12:30 p.m.

Agenda: Presentation of NIMH Director's report and discussion on NIMH program and policy issues.

Place: National Institutes of Health, Neuroscience Center, 6001 Executive Boulevard, Conference Room C/D/E, Rockville, MD 20852.

Closed: 1:15 p.m. to 5 p.m.

Agenda: To review and evaluate grant applications.

Place: National Institutes of Health, Neuroscience Center, 6001 Executive Boulevard, Conference Room C/D/E, Rockville, MD 20852.

Contact Person: Jane A. Steinberg, Ph.D., Director, Division of Extramural Activities, National Institute of Mental Health, NIH, Neuroscience Center, 6001 Executive Blvd., Room 6154, MSC 9609, Bethesda, MD 20892–9609, 301–443–5047.

Any member of the public interested in presenting oral comments to the committee may notify the Contact Person listed on this notice at least 10 days in advance of the meeting. Interested individuals and representatives of organizations may submit a letter of intent, a brief description of the organization represented, and a short description of the oral presentation. Only one representative of an organization may be allowed to present oral comments and if accepted by the committee, presentations may be limited to five minutes. Both printed and electronic copies are requested for the record. In addition, any interested person may file written comments with the committee by forwarding their statement to the Contact Person listed on this notice. The statement should include the name, address, telephone number and when applicable, the business or professional affiliation of the interested person.

In the interest of security, visitors will be asked to show one form of identification (for example, a government-issued photo ID, driver's license, or passport) and to state the purpose of their visit.

Information is also available on the Institute's/Center's home page: *http://www.nimh.nih.gov/about/advisory-boards-and-groups/namhc/index.shtml,* where an agenda and any additional information for the meeting will be posted when available.

(Catalogue of Federal Domestic Assistance Program Nos. 93.242, Mental Health Research Grants; 93.281, Scientist Development Award, Scientist Development Award for Clinicians, and Research Scientist Award; 93.282, Mental Health National Research Service Awards for Research Training, National Institutes of Health, HHS)

Dated: April 18, 2012.

Jennifer S. Spaeth,

Director, Office of Federal Advisory Committee Policy.

[FR Doc. 2012–10141 Filed 4–25–12; 8:45 am]

BILLING CODE 4140–01–P

DEPARTMENT OF HEALTH AND HUMAN SERVICES

National Institutes of Health

Eunice Kennedy Shriver National Institute of Child Health & Human Development; Notice of Closed Meeting

Pursuant to section 10(d) of the Federal Advisory Committee Act, as amended (5 U.S.C. App.), notice is hereby given of the following meeting.

The meeting will be closed to the public in accordance with the provisions set forth in sections 552b(c)(4) and 552b(c)(6), Title 5 U.S.C., as amended. The grant applications and the discussions could disclose confidential trade secrets or commercial property such as patentable material, and personal information concerning individuals associated with the grant applications, the disclosure of which would constitute a clearly unwarranted invasion of personal privacy.

Name of Committee: National Institute of Child Health and Human Development Special Emphasis Panel; ZHD1 DSR–H 54 1.

Date: May 7, 2012.

Time: 1 p.m. to 4 p.m.

Agenda: To review and evaluate grant applications.

Place: National Institutes of Health, 6100 Executive Boulevard, Rockville, MD 20852, (Telephone Conference Call).

Contact Person: Marita R. Hopmann, Ph.D., Scientific Review Officer, Division of Scientific Review, Eunice Kennedy Shriver National Institute of Child Health And Human Development, NIH, 6100 Executive Blvd., Room 5B01, Bethesda, MD 20892, 301–435–6911, *hopmannm@mail.nih.gov.*

This notice is being published less than 15 days prior to the meeting due to the timing limitations imposed by the review and funding cycle.

(Catalogue of Federal Domestic Assistance Program Nos. 93.864, Population Research; 93.865, Research for Mothers and Children; 93.929, Center for Medical Rehabilitation Research; 93.209, Contraception and Infertility Loan Repayment Program, National Institutes of Health, HHS)

Dated: April 19, 2012.

Jennifer S. Spaeth,

Director, Office of Federal Advisory Committee Policy.

[FR Doc. 2012–10119 Filed 4–25–12; 8:45 am]

BILLING CODE 4140–01–P

DEPARTMENT OF HEALTH AND HUMAN SERVICES

National Institutes of Health

National Heart, Lung, and Blood Institute; Notice of Closed Meeting

Pursuant to section 10(d) of the Federal Advisory Committee Act, as amended (5 U.S.C. App.), notice is hereby given of the following meeting.

The meeting will be closed to the public in accordance with the provisions set forth in sections 552b(c)(4) and 552b(c)(6), Title 5 U.S.C., as amended. The grant applications and the discussions could disclose confidential trade secrets or commercial property such as patentable material, and personal information concerning individuals associated with the grant applications, the disclosure of which would constitute a clearly unwarranted invasion of personal privacy.

Name of Committee: National Heart, Lung, and Blood Institute Special Emphasis Panel; The Kidney in Hypertension.

Date: May 17, 2012.

Time: 12 p.m. to 4 p.m.

Agenda: To review and evaluate grant applications.

Place: National Institutes of Health, 6701 Rockledge Drive, Bethesda, MD 20892, (Telephone Conference Call).

Contact Person: William J Johnson, Ph.D., Scientific Review Officer, Office of Scientific Review/DERA, National Heart, Lung, and Blood Institute, National Institutes of Health, 6701 Rockledge Drive, Room 7178, Bethesda, MD 20892, 301–435–0725, *johnsonwj@nhlbi.nih.gov.*

(Catalogue of Federal Domestic Assistance Program Nos. 93.233, National Center for Sleep Disorders Research; 93.837, Heart and Vascular Diseases Research; 93.838, Lung Diseases Research; 93.839, Blood Diseases and Resources Research, National Institutes of Health, HHS)

Dated: April 18, 2012.

Jennifer S. Spaeth,

Director, Office of Federal Advisory Committee Policy.

[FR Doc. 2012–10117 Filed 4–25–12; 8:45 am]

BILLING CODE 4140–01–P

DEPARTMENT OF HEALTH AND HUMAN SERVICES

National Institutes of Health

Eunice Kennedy Shriver National Institute of Child Health and Human Development; Notice of Meeting

Pursuant to section 10(d) of the Federal Advisory Committee Act, as amended (5 U.S.C. App.), notice is hereby given of a meeting of the Board of Scientific Counselors, NICHD.

The meeting will be open to the public as indicated below, with the attendance limited to space available. Individuals who plan to attend and need special assistance, such as sign language interpretation or other reasonable accommodations, should notify the Contact Person listed below in advance of the meeting.

The meeting will be closed to the public as indicated below in accordance with the provisions set forth in section 552b(c)(6), Title 5 U.S.C., as amended for the review, discussion, and evaluation of individual intramural programs and projects conducted by the Eunice Kennedy Shriver National Institute of Child Health & Human Development, including consideration of personnel qualifications and performance, and the competence of individual investigators, the disclosure of which would constitute a clearly unwarranted invasion of personal privacy.

Name of Committee: Board of Scientific Counselors, NICHD.

Date: June 1, 2012.

Open: 8 a.m. to 11:30 a.m.

Agenda: A report by the Scientific Director, NICHD, on the status of the NICHD Division of Intramural Research.

Place: National Institutes of Health, Building 31, 9000 Rockville Pike, Room 2A48, Bethesda, MD 20892.

Closed: 11:30 a.m. to 4 p.m.

Agenda: To review and evaluate personal qualifications and performance, and, competence of individual investigators.

Place: National Institutes of Health, Building 31, 31 Center Drive, Room 2A48, Bethesda, MD 20892.

Contact Person: Constantine A. Stratakis, MD, D(med)Sci, Scientific Director, Eunice Kennedy Shriver National Institute of Child Health and Human Development, NIH, 9000 Rockville Pike, Building 31, Room 2A46, Bethesda, MD 20892, 301–594–5984, *stratakc@mail.nih.gov.*

Information is also available on the Institute's/Center's home page: *www.nichd.nih.gov/about/bsd/htm,* where an agenda and any additional information for the meeting will be posted when available.

(Catalogue of Federal Domestic Assistance Program Nos.93.864, Population Research; 93.865, Research for Mothers and Children; 93.929, Center for Medical Rehabilitation Research; 93.209, Contraception and Infertility Loan Repayment Program, National Institutes of Health, HHS)

Dated: April 19, 2012.

Jennifer S. Spaeth,

Director, Office of Federal Advisory Committee Policy.

[FR Doc. 2012–10144 Filed 4–25–12; 8:45 am]

BILLING CODE 4140–01–P

DEPARTMENT OF THE INTERIOR

Office of the Secretary

Secretarial Commission on Indian Trust Administration and Reform

AGENCY: Office of the Secretary, Interior.

ACTION: Notice of meeting.

SUMMARY: The Office of the Secretary is announcing that the Secretarial Commission on Indian Trust Administration and Reform (the Commission) will hold a public webinar meeting on May 16, 2012. Having gathered valuable background information during the first meeting held in Washington, DC, March 1–2, 2012, the Commission is beginning to develop a comprehensive evaluation of how the Department of the Interior manages and administers trust responsibilities to American Indians. The Secretarial Commission's charter requires the Commission to provide well-reasoned and factually-based recommendations for potential improvements to the existing management and administration of the trust administration system. The Commission is committed to early public engagement and welcomes your participation in these important meetings.

DATES: The Commission's webinar meeting will begin at 3:30 p.m. and end at 6 p.m. Eastern Time on May 16, 2012. Attendance is open to the public, but limited space is available. Members of the public who wish to attend must RSVP by May 11, 2012, by registering at *https://www1.gotomeeting.com/register/115154409.* Instructions for joining the webinar will be emailed after registration occurs.

FOR FURTHER INFORMATION CONTACT: The Designated Federal Official, Jodi Gillette, Deputy Assistant Secretary—Indian Affairs, 1849 C Street NW., MS–4141, Washington, DC 20240; or email to *Jodi.Gillette@bia.gov.*

SUPPLEMENTARY INFORMATION: As part of President Obama's commitment to fulfilling this nation's trust responsibilities to Native Americans, the Secretary of the Interior appointed five members to serve on the Secretarial Commission on Indian Trust Administration and Reform, established under Secretarial Order No. 3292, dated December 8, 2009. The Commission will play a key role in the Department's ongoing efforts to empower Indian nations and strengthen nation-to-nation relationships.

The Commission will complete a comprehensive evaluation of the Department's management and administration of the trust assets within a two-year period and offer recommendations to the Secretary of the Interior of how to improve in the future. The Commission will:

(1) Conduct a comprehensive evaluation of the Department's management and administration of the trust administration system;

(2) Review the Department's provision of services to trust beneficiaries;

(3) Review input from the public, interested parties, and trust beneficiaries which should involve conducting a number of regional listening sessions;

(4) Consider the nature and scope of necessary audits of the Department's trust administration system;

(5) Recommend options to the Secretary to improve the Department's management and administration of the trust administration system based on information obtained from the Commission's activities, including whether any legislative or regulatory changes are necessary to permanently implement such improvements; and

(6) Consider the provisions of the American Indian Trust Fund Management Reform Act of 1994 providing for the termination of the Office of the Special Trustee for American Indians, and make recommendations to the Secretary regarding any such termination.

The following items will be on the agenda:

- Update on action items from March 2012 meeting;
- Report and discuss progress of subcommittees;
- Review and update work plan;
- Discuss draft communications and outreach plan;
- Report on Commission meeting dates and locations, anticipated agenda for June; and
- Public comments.

Written comments may be sent to the Designated Federal Official listed in the **FOR FURTHER INFORMATION CONTACT** section above. To review all related material on the Commission's work, please refer to *http://www.doi.gov/cobell/commission/index.cfm.* All meetings are open to the public.

Dated: April 20, 2012.

David J. Hayes,

Deputy Secretary.

[FR Doc. 2012–10092 Filed 4–25–12; 8:45 am]

BILLING CODE 4310–W7–P

DEPARTMENT OF THE INTERIOR

Fish and Wildlife Service

[FWS–R6–ES–2011–N276; FXES11130600000C2–123–FF06E00000]

Endangered and Threatened Wildlife and Plants; Revised Recovery Plan for the Utah Prairie Dog

AGENCY: Fish and Wildlife Service, Interior.

ACTION: Notice of document availability.

SUMMARY: The U.S. Fish and Wildlife Service (Service) announces the availability of a final revised recovery plan for the Utah prairie dog (*Cynomys parvidens*). This species is federally listed as threatened under the Endangered Species Act of 1973, as amended (Act).

ADDRESSES: Electronic copies of the final recovery plan are available online at http://www.fws.gov/endangered/species/recovery-plans.html. Paper copies of the final revised recovery plan are available by request from the Utah Field Office, U.S. Fish and Wildlife Service, 2369 West Orton Circle, Suite 50, West Valley City, UT 84119; telephone 801–975–3330.

FOR FURTHER INFORMATION CONTACT: Larry Crist, Field Supervisor, at the above address, or telephone 801–975–3330.

SUPPLEMENTARY INFORMATION:

Background

Recovering an endangered or threatened animal or plant to the point where it is again a secure, self-sustaining member of its ecosystem is a primary goal of the Service's endangered species program. To help guide the recovery effort, the Service prepares recovery plans for the federally listed species native to the United States where a plan will promote the conservation of the species. Recovery plans describe site-specific actions necessary for the conservation of the species; establish objective, measurable criteria which, when met, would result in a determination that the species no longer needs the protection of the Act (16 U.S.C. 1531 *et seq.*); and provide estimates of the time and cost for implementing the needed recovery measures.

The Act requires recovery plans for listed species unless such a plan would not promote the conservation of a particular species. Section 4(f) of the Act, as amended in 1988, requires that public notice and opportunity for public review and comment be provided during recovery plan development. We made the draft recovery plan available for public comment and peer review from September 17, 2010, to November 16, 2010 (75 FR 57055). We have considered all information received during the public comment and peer review period in the preparation of the final revised recovery plan for the Utah prairie dog. The Service and other Federal agencies also will take these comments and reviews into consideration in the course of implementing the final approved recovery plan for the Utah prairie dog. In this final revised plan, we have summarized and responded to the issues raised by both the public and the requested peer reviewers in an appendix to the plan, and incorporated changes to the plan as appropriate.

The Utah prairie dog (*Cynomys parvidens*), found only in southwestern and central Utah, was listed as an endangered species on June 4, 1973 (38 FR 14678). At the time of listing, the species was threatened by habitat destruction and modification, overexploitation, disease, and predation. Subsequently, Utah prairie dog populations increased significantly in portions of their range, and on May 29, 1984 (49 FR 22330), the species was reclassified as threatened with a special rule to allow regulated take of the species. This special rule was amended on June 14, 1991 (56 FR 27438), to increase the amount of regulated take allowed throughout the species' range. Recent Utah prairie dog population trends appear to be relatively stable, although the species remains vulnerable to several serious threats. These include habitat loss, plague, changing climatic conditions, unauthorized take, and disturbance from recreational and economic land uses.

The recovery of Utah prairie dogs will rely on effective conservation responses to the issues facing the species, which remain varied and complex. These issues include plague, urban expansion, grazing, cultivated agriculture, vegetative community changes, invasive plants, off-highway vehicle and recreation uses, climate change, energy resource exploration and development, fire management, poaching, and predation. Strategically, these issues can be reduced to two overriding concerns: loss of habitat and plague. The recovery strategy for the Utah prairie dog focuses on the need to address colony loss and disease through a program that encompasses threats abatement, population management, research, and monitoring. We emphasize conserving extant colonies, many of which occur on non-Federal lands; establishing additional colonies on Federal and non-Federal lands via habitat improvement or translocations; controlling the transmission of plague; and monitoring habitat conditions.

Authority

We developed our final recovery plan under the authority of section 4(f) of the Act, 16 U.S.C. 1533(f). We publish this notice under section 4(f) of the Endangered Species Act of 1973, as amended (16 U.S.C. 1531 *et seq.*).

Dated: April 20, 2012.

Stephen Guertin,

Regional Director, Denver, Colorado.

[FR Doc. 2012–10033 Filed 4–25–12; 8:45 am]

BILLING CODE 4310–55–P

DEPARTMENT OF THE INTERIOR

Bureau of Indian Affairs

Renewal of Agency Information Collection for Indian Reservation Roads; Request for Comments

AGENCY: Bureau of Indian Affairs, Interior.

ACTION: Notice of request for comments.

SUMMARY: In compliance with the Paperwork Reduction Act of 1995, the Bureau of Indian Affairs (BIA) is seeking comments on renewal of Office of Management and Budget (OMB) approval for the collection of information for Indian Reservation Roads. The information collection is currently authorized by OMB Control Number 1076–0161, which expires July 31, 2012.

DATES: Submit comments on or before June 25, 2012.

ADDRESSES: You may submit comments on the information collection to LeRoy Gishi, Chief, Division of Transportation, Bureau of Indian Affairs, 1849 C Street NW., MS–4513 MIB, Washington, DC 20240; facsimile: (202) 219–1193 email: *LeRoy.Gishi@bia.gov.*

FOR FURTHER INFORMATION CONTACT: LeRoy Gishi, (202) 513–7711.

SUPPLEMENTARY INFORMATION:

I. Abstract

This collection allows Federally recognized Tribal governments to participate in the Indian Reservation Roads (IRR) program as defined in 25 U.S.C. 204(a)(1). The information collected determines the allocation of IRR program funds to Indian tribes as described in 25 U.S.C. 202 (d)(2)(A).

II. Request for Comments

The BIA requests your comments on this collection concerning: (a) The necessity of this information collection

for the proper performance of the functions of the agency, including whether the information will have practical utility; (b) The accuracy of the agency's estimate of the burden (hours and cost) of the collection of information, including the validity of the methodology and assumptions used; (c) Ways we could enhance the quality, utility, and clarity of the information to be collected; and (d) Ways we could minimize the burden of the collection of the information on the respondents, such as through the use of automated collection techniques or other forms of information technology.

Please note that an agency may not conduct or sponsor, and an individual need not respond to, a collection of information unless it has a valid OMB Control Number.

It is our policy to make all comments available to the public for review at the location listed in the **ADDRESSES** section. Before including your address, phone number, email address or other personally identifiable information, you should be aware that your entire comment—including you personal identifying information—may be made publicly available at any time. While you may ask us in your comment to withhold your personal identifying information, we cannot guarantee that we will be able to do so.

III. Data

OMB Control Number: 1076–0161.

Title: 25 CFR Part 170, Indian Reservation Roads.

Brief Description of Collection: Some of the information such as the application of Indian Reservation Roads High Priority Projects (IRRHPP) (25 CFR 170.210), the road inventory updates (25 CFR 170.443), the development of a long range transportation plan (25 CFR 170.411 and 170.412), the development of a tribal transportation improvement program and priority list (25 CFR 170.420 and 170.421) are mandatory for consideration of projects and for program funding from the formula. Some of the information, such as public hearing requirements, is necessary for public notification and involvement (25 CFR 170.437 and 170.439). While other information, such as data appeals (25 CFR 170.231) and requests for design exceptions (25 CFR 170.456), are voluntary.

Type of Review: Extension without change of a currently approved collection.

Respondents: Federally recognized Indian Tribal governments who have transportation needs associated with the IRR Program as described in 25 CFR part 170.

Number of Respondents: Varies from 10 to 350.

Frequency of Response: Annually or on an as needed basis.

Estimated Time per Response: Reports require from 30 minutes to 40 hours to complete. An average would be 16 hours.

Estimated Total Annual Hour Burden: 4,120 hours.

Estimated Total Annual Cost Burden: $0.

Dated: April 23, 2012.

Alvin Foster,

Assistant Director for Information Resources.

[FR Doc. 2012–10096 Filed 4–25–12; 8:45 am]

BILLING CODE 4310–LY–P

DEPARTMENT OF THE INTERIOR

Bureau of Indian Affairs

Environmental Impact Statement for the Proposed Wheatgrass Ridge Wind Project, Fort Hall Indian Reservation, Idaho

AGENCY: Bureau of Indian Affairs, Interior.

ACTION: Notice of cancellation.

SUMMARY: This notice announces that the Bureau of Indian Affairs (BIA) intends to cancel all work on the Environmental Impact Statement (EIS) for the proposed Wheatgrass Ridge Wind Project on the Fort Hall Indian Reservation, Idaho.

FOR FURTHER INFORMATION CONTACT: Dr. B. J. Howerton, Environmental Services Manager, telephone (503) 231–6749.

SUPPLEMENTARY INFORMATION: The BIA is canceling work on this EIS because the proponent of the Wheatgrass Ridge Wind Project, the Wheatgrass Ridge Wind, LLC., has formally withdrawn the proposal. The notice of intent to prepare the EIS, which included a description of the proposed action, was published in the **Federal Register** on June 2, 2011 (76 FR 31975). The Draft EIS had not been published.

Dated: April 3, 2012.

Donald E. Laverdure,

Principal Deputy Assistant Secretary—Indian Affairs.

[FR Doc. 2012–10080 Filed 4–25–12; 8:45 am]

BILLING CODE 4310–W7–P

DEPARTMENT OF THE INTERIOR

Bureau of Indian Affairs

Draft Environmental Impact Statement for the Proposed Spokane Tribe of Indians West Plains Casino and Mixed Use Project, City of Airway Heights, Spokane County, WA

AGENCY: Bureau of Indian Affairs, Interior.

ACTION: Notice of reopening of comment period.

SUMMARY: The Bureau of Indian Affairs (BIA) is reopening the comment period for the Draft Environmental Impact Statement (DEIS) for the Spokane Tribe of Indians West Plains casino and mixed use project, City of Airway Heights, Spokane County, Washington.

DATES: Comments on the DEIS are due on May 16, 2012.

FOR FURTHER INFORMATION CONTACT: Dr. B.J. Howerton at (503) 231–6749.

SUPPLEMENTARY INFORMATION: The BIA published the original Notice of Availability for the DEIS in the **Federal Register** on March 2, 2012 (77 FR 12873) and provided for the comment period to end on April 16, 2012. The BIA is re-opening the comment period to end on May 16, 2012.

Please refer to the March 2, 2012 Notice of Availability (77 FR 12873) for project details and instructions for submitting comments. The BIA will consider all previously submitted comments, as well as any additional comments.

The DEIS remains available for review at the Airway Heights Branch of the Spokane County Library District located at 1213 South Lundstrom St. Airway Heights, Washington 99001 and the Spokane Public Library located at 906 West Main Street, Spokane, Washington 99201. The DEIS is also available online at: *http://www.westplainseis.com.*

Dated: April 20, 2012.

Donald E. Laverdure,

Principal Deputy Assistant Secretary—Indian Affairs.

[FR Doc. 2012–10095 Filed 4–25–12; 8:45 am]

BILLING CODE 4310–W7–P

DEPARTMENT OF THE INTERIOR

Bureau of Land Management

[LL WO31000.L13100000.PB0000.24 1E]

Renewal of Information Collection

AGENCY: Bureau of Land Management, Interior.

ACTION: 30-day notice and request for comments.

SUMMARY: The Bureau of Land Management (BLM) has submitted an information collection request to the Office of Management and Budget (OMB) for a 3-year extension of OMB Control Number 1004–0162 under the Paperwork Reduction Act. The respondents are required to provide certain information in order to conduct onshore oil and gas geophysical exploration on lands managed by the BLM or by the U.S. Forest Service.

DATES: The OMB is required to respond to this information collection request within 60 days but may respond after 30 days. Therefore, you must submit your comments to the OMB at the address below on or before May 29, 2012.

ADDRESSES: Please submit comments directly to the Desk Officer for the Department of the Interior (OMB #1004–0162, Office of Management and Budget, Office of Information and Regulatory Affairs, fax 202–395–5806, or by electronic mail at *oira_docket@omb.eop.gov.* Please provide a copy of your comments to the BLM. You may do so via mail, fax, or electronic mail.

Mail: U.S. Department of the Interior, Bureau of Land Management, 1849 C Street NW., Room 2134LM, Attention: Jean Sonneman, Washington, DC 20240.

Fax: to Jean Sonneman at 202–245–0050.

Electronic mail: Jean_Sonneman@blm.gov.

Please indicate ''Attn: 1004–0162'' regardless of the form of your comments.

Before including your address, telephone number, email address, or other personal identifying information in your comment, be advised that your entire comment—including your personal identifying information—may be made publicly available at any time. While you can ask in your comment to withhold from public review your personal identifying information, we cannot guarantee that we will be able to do so.

FOR FURTHER INFORMATION CONTACT: Barbara Gamble, Division of Fluid Minerals, at (202) 912–7148 (Commercial or FTS). Persons who use a telecommunications device for the deaf (TDD) may call the Federal Information Relay Service (FIRS) on 1–800–877–8330 to leave a message for Ms. Gamble. You may also review the information collection request online at *http://www.reginfo.gov/public/do/PRAMain.*

SUPPLEMENTARY INFORMATION: The Paperwork Reduction Act (44 U.S.C. 3501–3521) and OMB regulations at 5 CFR part 1320 provide that an agency may not conduct or sponsor a collection of information unless it displays a currently valid OMB control number. Until OMB approves a collection of information, you are not obligated to respond. 44 U.S.C. 3506 and 3507. In order to obtain and renew an OMB control number, Federal agencies are required to seek public comment on information collection and recordkeeping activities (see 5 CFR 1320.8(d) and 1320.12(a)).

On December 13, 2011, the BLM published a 60-day notice (76 FR 77550) requesting comments on the proposed information collection. The comment period ended February 13, 2012. No comments were received.

The following information is provided for the information collection:

Title: Onshore Oil and Gas Geophysical Exploration (43 CFR Part 3150 and 36 CFR Parts 228 and 251).

Forms

- BLM Form 3110–4/FS Form 2800–16, Notice of Intent and Authorization to Conduct Oil and Gas Geophysical Exploration Operations; and
- BLM Form 3110–5/FS Form 2800–16a, Notice of Completion of Oil and Gas Geophysical Exploration Operations.

OMB Control Number: 1004–0162.

Abstract: Respondents supply information that enables the BLM and the U.S. Forest Service to ensure that geophysical exploration is conducted in a manner consistent with applicable statutes, regulations, land use plans, and environmental documents.

Frequency of Collection: On occasion.

Estimated Number and Description of Respondents: 1,253 entities undertaking oil and gas geophysical exploration, i.e., activity relating to the search for evidence of oil and gas on lands managed by the BLM or the FS.

Estimated Reporting and Recordkeeping ''Hour'' Burden: 836 hours.

Estimated ''Non-Hour'' Burden: $75.

The following table details the individual components and respective hour burdens of this information collection request:

TABLE 12–2—ESTIMATES OF HOUR BURDENS

A. Type of response	B. Number of responses	C. Time per response	D. Total hours (column B × column C)
Notice of Intent and Request To Conduct Geophysical Exploration Operations/Outside Alaska. 43 CFR 3151.1 BLM Form 3150–4/ FS Form 2800–16	622 (597 to BLM and 25 to FS)	1 hour	622
Notice of Intent and Request To Conduct Geophysical Exploration Operations/Alaska. 43 CFR 3152.1 BLM Form 3150–4	3	1 hour	3
Notice of Completion of Geophysical Exploration Operations 43 CFR 3151.2 and 3152.7 BLM Form 3150–5/ FS Form 2800–16a	625 (600 to BLM and 25 to FS)	20 minutes	208
Data and Information Obtained in Carrying Out Exploration Plan. (Alaska only) 43 CFR 3152.6	3	1 hour	3
Totals	1,253		836

Jean Sonneman,

Bureau of Land Management, Information Collection Clearance Officer.

[FR Doc. 2012–10042 Filed 4–25–12; 8:45 am]

BILLING CODE 4310–84–P

DEPARTMENT OF THE INTERIOR

Bureau of Land Management

[LLES956000 L14200000.BJ0000]

Eastern States: Filing of Plats of Survey; Mississippi

AGENCY: Bureau of Land Management, Interior.

ACTION: Notice.

SUMMARY: The Bureau of Land Management (BLM) will file the plats of survey of the lands described below in the BLM-Eastern States office in Springfield, Virginia, 30 calendar days from the date of publication in the **Federal Register**.

FOR FURTHER INFORMATION CONTACT: Bureau of Land Management-Eastern States, 7450 Boston Boulevard, Springfield, Virginia 22153. Attn: Dominica Van Koten. Persons who use a telecommunications device for the deaf (TDD) may call the Federal Information Relay Service (FIRS) at 1–800–877–8339 to contact the above individual during normal business hours. The FIRS is available 24 hours a day, 7 days a week, to leave a message or question with the above individual. You will receive a reply during normal business hours.

SUPPLEMENTARY INFORMATION: These surveys were requested by the 935. The lands surveyed are:

St. Stephens Meridian, Mississippi

T. 9 N., R. 17 W.

The supplemental plat of Section 1, in Township 9 North, Range 17 West, of the St. Stephens Meridian, in the State Mississippi, and was accepted February 3, 2012.

We will place copies of the plats we described in the open files. They will be available to the public as a matter of information.

If BLM receives a protest against a survey, as shown on the plat, prior to the date of the official filing, we will stay the filing pending our consideration of the protest.

We will not officially file the plats until the day after we have accepted or dismissed all protests and they have become final, including decisions on appeals.

Dated: March 21, 2012.

Dominica Van Koten,

Chief Cadastral Surveyor.

[FR Doc. 2012–10036 Filed 4–25–12; 8:45 am]

BILLING CODE 4310–GJ–P

DEPARTMENT OF THE INTERIOR

Bureau of Land Management

[LLUT92000 L13100000 FI0000 25–7A]

Notice of Proposed Class II Reinstatement of Terminated Oil and Gas Leases, Utah.

AGENCY: Bureau of Land Management, Interior.

ACTION: Notice of Proposed Class II Reinstatement of Terminated Oil and Gas Leases, Utah.

SUMMARY: In accordance with Title IV of the Federal Oil and Gas Royalty Management Act (Pub. L. 97–451), Skyline Geyser LLC timely filed a petition for reinstatement of oil and gas leases UTU86505, UTU86506, and UTU86485 for lands in Iron County, Utah, and it was accompanied by all required rentals and royalties accruing from July 1, 2011, the date of termination.

FOR FURTHER INFORMATION CONTACT: Kent Hoffman, Deputy State Director, Lands and Minerals, Utah State Office, Bureau of Land Management, 440 West 200 South, Salt Lake City, Utah 84145, phone (801) 539–4063.

Persons who use a telecommunications device for the deaf (TDD) may call the Federal Information Relay Service (FIRS) at 1–800–877–8339 to contact the above individual during normal business hours. The FIRS is available 24 hours a day, 7 days a week, to leave a message or question with the above individual. You will receive a reply during normal business hours.

SUPPLEMENTARY INFORMATION: The lessee has agreed to new lease terms for rentals and royalty rates. The rentals for UTU86506 and UTU86485 will increase to $5 per acre per year and royalty rate will increase to 16 ⅔%. Rental for UTU86505 will increase to $10 per acre and royalty to 16 ⅔%. The $500 administrative fee for the leases has been paid and the lessee has reimbursed the Bureau of Land Management for the cost of publishing this notice.

The public has 30 days after publication in the **Federal Register** to comment on the issuance of the Class II reinstatement. If no objections are received within that 30-day period, the BLM will issue a decision to the lessee reinstating the lease. Written comments will be accepted by fax at (801) 539–4200, email: *khoffman@blm.gov,* or letter to: Bureau of Land Management, Utah State Office, Attn: Kent Hoffman, P.O. Box 45155, Salt Lake City, UT 84145.

As the lessee has met all the requirements for reinstatement of the leases as set out in Section 31(d) and (e) of the Mineral Leasing Act of 1920 (30 U.S.C. 188), the Bureau of Land Management is proposing to reinstate the leases, effective July 1, 2011, subject to the original terms and conditions of the leases and the increased rental and royalty rates cited above.

Shelley J. Smith,

Acting Associate State Director.

[FR Doc. 2012–10044 Filed 4–25–12; 8:45 am]

BILLING CODE 4310–DQ–P

DEPARTMENT OF THE INTERIOR

Bureau of Land Management

[LLWY920000–L14300000–FR0000; WYW–165149]

Notice of Realty Action: Non-Competitive (Direct) Sale of Public Land in Washakie County, Wyoming

AGENCY: Bureau of Land Management, Interior.

ACTION: Notice.

SUMMARY: The Bureau of Land Management (BLM) proposes to sell a 22.98-acre parcel of public land in Washakie County, Wyoming, by non-competitive (direct) sale to the town of Ten Sleep under the provisions of the Federal Land Policy and Management Act of 1976 (FLPMA), at no less than the appraised fair market value.

DATES: Interested parties may submit comments regarding the proposed sale of the lands until June 11, 2012.

ADDRESSES: Send written comments concerning this notice to Field Manager, BLM Worland Field Office, 101 South 23rd Street, Worland, Wyoming 82401, or by email to *worland_wymail@blm.gov.*

FOR FURTHER INFORMATION CONTACT: Karla Bird, Field Manager, BLM, Worland Field Office, at 307–347–5100. Persons who use a telecommunications device for the deaf (TDD) may call the Federal Information Relay Service (FIRS) at 1–800–877–8339 to contact the above individual during normal business hours. The FIRS is available 24 hours a day, 7 days a week, to leave a message or question with the above individual. You will receive a reply during normal business hours.

SUPPLEMENTARY INFORMATION: The following described public land in Washakie County, Wyoming, is proposed for direct sale under the authority of Section 203 of the FLPMA, (43 U.S.C. 1713):

Sixth Principal Meridian

T. 47 N., R. 88 W.,
sec. 21, lot 10.

The area described contains 22.98 acres, in Washakie County.

The 1988 BLM Washakie Resource Management Plan identified this parcel of public land as suitable for disposal. Conveyance of the identified public land will be subject to valid existing rights and encumbrances of record, including but not limited to, rights-of-way for roads and public utilities. All minerals will be reserved to the United States. On April 26, 2012, the above-described land will be segregated from all forms of appropriation under the public land laws, including the mining laws, except the sale provisions of the FLPMA. Until completion of the sale, the BLM is no longer accepting land use applications affecting the identified public land, except applications for the amendment of previously-filed right-of-way applications or existing authorizations to increase the term of the grants in accordance with 43 CFR 2807.15 and 2886.15. The segregative effect will terminate upon issuance of a patent, publication in the **Federal Register** of a termination of the segregation, or April 28, 2014, whichever comes first unless extended by the BLM Wyoming State Director in accordance with 43 CFR 2711.1–2(d), prior to the termination date.

The public land will not be sold until at least June 25, 2012, at the appraised market value of $55,000. The patent, if issued, will be subject to the following terms, conditions and reservations:

1. A reservation if a right-of-way thereon for ditches or canals constructed by the United States under the authority of the Act of August 30, 1890 (43 U.S.C. 945);

2. All minerals, together with the right to prospect for, mine, and remove such deposits from the same under applicable law and such regulations as the Secretary of the Interior may prescribe shall be reserved to the United States.

3. A reservation of a right-of-way for a Federal-aid Highway (Ten Sleep-Big Trails Road) as to lot 10, sec. 21, T. 47 N., R. 88 W., 6th P.M., Wyoming, under the Act of August 27, 1958, as amended, 23 U. S. C. 317, of record in the BLM, Worland Field Office, under Serial No. WYW–79595.

4. An appropriate indemnification clause protecting the United States from claims arising out of the lessee/patentee's use, occupancy, or operations on the leased/patented lands.

5. The patent will be subject to all valid existing rights documented on the official public land records at the time of patent issuance.

This land is being offered by direct sale to the Town of Ten Sleep pursuant to 43 CFR 2711.3–3. A competitive sale is not appropriate and the public interest would be best served by a direct sale because the tract has been identified for transfer to a local government for a project of public importance. Adjoining public land uses will not be impacted by the sale.

Interested parties may submit written comments to the BLM Worland Field Manager at the address above. Comments, including names and street addresses of respondents, will be available for public review at the BLM Worland Field Office during regular business hours. Before including your address, phone number, email address, or other personal identifying information in your comment, you should be aware that your entire comment—including your personal identifying information—may be made publicly available at any time. While you may ask us in your comment to withhold your personal identifying information from public review, we cannot guarantee that we will be able to do so. Any adverse comments will be reviewed by the BLM Wyoming State Director who may sustain, vacate, or modify this realty action and issue a final determination. In the absence of any objections, this realty action will become the final determination of the Department of the Interior.

Authority: 43 CFR 2711.1–2.

Donald A. Simpson,
Wyoming State Director.

[FR Doc. 2012–10060 Filed 4–25–12; 8:45 am]
BILLING CODE 4310–22–P

DEPARTMENT OF THE INTERIOR

National Park Service

[7148–NZY]

Plan of Operations, Environmental Assessment, Big Thicket National Preserve, Texas

AGENCY: National Park Service, Department of the Interior.

ACTION: Notice of Availability of a Plan of Operations and Environmental Assessment for a 30-day public review.

SUMMARY: Notice is hereby given in accordance with Section 9.52(b) of Title 36 of the Code of Federal Regulations, Part 9, Subpart B, that the National Park Service (NPS) has received from Cimarex Energy Company (Cimarex), a Plan of Operations to conduct the Rivers Edge 3–D Seismic Survey within the Beaumont, Little Pine Island—Pine Island Bayou Corridor, Lower Neches River Corridor, and Village Creek Corridor Units of Big Thicket National Preserve (Preserve), in Hardin, Jasper, Jefferson, and Orange Counties, Texas. The NPS has prepared an Environmental Assessment of this proposal. The Environmental Assessment evaluates two alternatives: A No Action alternative under which there would be no new impacts, and the NPS preferred alternative under which Cimarex would conduct a 3–D seismic survey within the Preserve using a combination of helicopter-portable and tracked drilling equipment.

DATES: The above documents are available for public review and comment through May 29, 2012.

ADDRESSES: The Plan of Operations and Environmental Assessment are available for public review and comment at *http://parkplanning.nps.gov* and in the Office of the Superintendent, Douglas Neighbor, Big Thicket National Preserve, 6044 FM 420, Kountze, Texas 77625. Copies of the Plan of Operations and Environmental Assessment are available upon request from the contact listed below.

FOR FURTHER INFORMATION CONTACT: Ms. Stephanie Burgess, Oil and Gas Program Manager, Big Thicket National Preserve, 6044 FM 420, Kountze, Texas 77625, Telephone: 409 951–6822, email at *Stephanie_M_Burgess@nps.gov.*

SUPPLEMENTARY INFORMATION: If you wish to comment on the Plan of Operations and Environmental Assessment, you may mail comments to the name and address above or post comments online at *http://parkplanning.nps.gov/.* The documents will be on public review for 30 days. Please note that the comments submitted in response to this notice are a matter of public record. Before including your address, phone number, email address, or other personal identifying information in your comment, you should be aware that your entire comment, including your personal identifying information, may be made publicly available at any time. While you can ask us in your comment to withhold your personal identifying information from public review, we cannot guarantee that we will be able to do so.

Dated: April 18, 2012.

Douglas Neighbor,

Superintendent, Big Thicket National Preserve, National Park Service.

[FR Doc. 2012–10137 Filed 4–25–12; 8:45 am]

BILLING CODE P

DEPARTMENT OF THE INTERIOR

National Park Service

Final General Management Plan and Environmental Impact Statement for the South Unit of Badlands National Park, South Dakota

AGENCY: National Park Service, Department of the Interior.

ACTION: Notice of availability.

SUMMARY: Pursuant to Section 102(2)(C) of the National Environmental Policy Act of 1969 (42 U.S.C. 4332(2)(C)), the National Park Service (NPS) announces the availability of the Final General Management Plan and Environmental Impact Statement (GMP/EIS) for the South Unit of Badlands National Park, South Dakota.

DATES: The Final GMP/EIS will remain available for public review for 30 days following the publishing of the Notice of Availability in the **Federal Register** by the Environmental Protection Agency.

ADDRESSES: Copies of the GMP/EIS are available by request by writing to Badlands National Park, P.O. Box 6, Interior, South Dakota 57750, by telephoning 605–433–5361, or by emailing *BADL_Superintendent@nps.gov.*

The document is available to be picked up in person at Badlands National Park, 25216 Ben Reifel Road, Interior, South Dakota. The document can be found on the internet on the NPS Planning, Environment, and Public Comment Web site at: *http://www.parkplanning.nps.gov/badl.* It can also be accessed through the Park's home page at *http://www.nps.gov/badl.*

SUPPLEMENTARY INFORMATION: The NPS prepared a draft GMP/EIS for the South Unit of Badlands National Park combining the plan and an environmental analysis. The GMP provides a framework for making decisions about and managing the South Unit's resources and visitor use for the next 15–20 years.

The draft was made available for public review for 75 days ending November 1, 2010. During the review period, the NPS distributed over 900 copies of the draft. The GMP team held three public open house-style meetings on Pine Ridge Indian Reservation, plus one each in Wall and Rapid City, South Dakota, and Washington, DC, during the comment period. The draft was also made available at the Park offices, on the Internet, and at area libraries.

Over 65 people attended the meetings, where individual comments were recorded. Additional comments were received through letters, comment forms, and electronic messages. A total of 361 comments were received from all sources in response to the Draft GMP. Comments from individuals, groups, and public agencies on the alternatives, the preferred alternative, and the environmentally preferred alternative were considered.

No substantive changes were made to the preferred alternative as a result of public comments received on the Draft GMP/EIS. The preferred alternative will provide for the preservation of natural resources, while offering opportunities for visitor enjoyment of natural, cultural, and recreational resources in a scenic outdoor setting.

FOR FURTHER INFORMATION CONTACT: Contact the Superintendent, Badlands National Park, Interior, South Dakota 57750, telephone 605–4335361.

Dated: September 13, 2011.

Michael T. Reynolds,

Regional Director, Midwest Region.

Editorial Note: This document was received at the Office of the Federal Register April 23, 2012.

[FR Doc. 2012–10132 Filed 4–25–12; 8:45 am]

BILLING CODE 4312–AD–P

DEPARTMENT OF THE INTERIOR

Bureau of Ocean Energy Management

Notice on Outer Continental Shelf Oil and Gas Lease Sales

AGENCY: Bureau of Ocean Energy Management (BOEM), Interior.

ACTION: List of restricted joint bidders.

SUMMARY: Pursuant to the authority vested in the Director of the Bureau of Ocean Energy Management by the joint bidding provisions of 30 CFR 556.41, each entity within one of the following groups shall be restricted from bidding with any entity in any other of the following groups at Outer Continental Shelf oil and gas lease sales to be held during the bidding period May 1, 2012, through October 31, 2012. The List of Restricted Joint Bidders published in the **Federal Register** on November 2, 2011, covered the period November 1, 2011, through April 30, 2012.

Group I.
- Exxon Mobil Corporation
- ExxonMobil Exploration Company

Group II.
- Shell Oil Company
- Shell Offshore Inc.
- SWEPI LP
- Shell Frontier Oil & Gas Inc.
- SOI Finance Inc.
- Shell Gulf of Mexico Inc.

Group III.
- BP America Production Company
- BP Exploration & Production Inc.
- BP Exploration (Alaska) Inc.

Group IV.
- Chevron Corporation
- Chevron U.S.A. Inc.
- Chevron Midcontinent, L.P.
- Unocal Corporation
- Union Oil Company of California
- Pure Partners, L.P.

Group V.
- ConocoPhillips Company
- ConocoPhillips Alaska, Inc.
- Phillips Pt. Arguello Production Company
- Burlington Resources Oil & Gas Company LP
- Burlington Resources Offshore Inc.
- The Louisiana Land and Exploration Company
- Inexeco Oil Company

Group VI.
- Statoil ASA
- Statoil Gulf of Mexico LLC
- Statoil USA E&P Inc.
- Statoil Gulf Properties Inc.

Group VII.
- Petrobras America Inc.
- Petroleo Brasileiro S.A.

Group VIII. Total E&P USA, Inc.

Dated: April 6, 2012.

Tommy P. Beaudreau,

Director, Bureau of Ocean Energy Management.

[FR Doc. 2012–10100 Filed 4–25–12; 8:45 am]

BILLING CODE 4310–VH–P

DEPARTMENT OF THE INTERIOR

Bureau of Ocean Energy Management

Record of Decision for Authorizing the Use of Outer Continental Shelf (OCS) Sand Resources in the Martin County, Florida Hurricane Storm Damage Reduction Project

AGENCY: Bureau of Ocean Energy Management (BOEM), Interior.

ACTION: Notice of Availability of a Record of Decision.

SUMMARY: BOEM has issued a Record of Decision (ROD) to authorize the use of OCS sand resources by the U.S. Army Corps of Engineers (USACE) and Martin County Board of Commissioners in the Martin County, Florida Hurricane Storm Damage Reduction (HSDR) Project. The ROD documents the BOEM's decision in

selecting the Preferred Alternative described in the USACE's Final Supplemental Environmental Impact Statement (SEIS) for the Martin County HSDR Project (August 2011). BOEM will enter into a negotiated agreement for the purpose of making sand available from a shoal on the OCS for placement on the beach in support of the beach nourishment, following the mandated 30-day wait period from the date of the issuance of the ROD. BOEM is announcing the availability of this ROD in accordance with the regulations implementing the National Environmental Policy Act (NEPA). The Deputy Director for the BOEM signed the ROD on March 28, 2012.

Authority: This NOA of the ROD is published pursuant to the regulations (40 CFR 1506.6) implementing the provisions of the NEPA of 1969 (42 U.S.C. 4321 et seq.).

SUPPLEMENTARY INFORMATION:

Description of the Martin County HSDR Project and BOEM's Connected Action

The USACE and Martin County Board of Commissioners have proposed to reduce the potential for damage to, or loss of, coastal properties and habitat along Hutchinson Island, Florida from storm-induced wave impacts and coastal erosion. In the Congressionally-authorized Martin County HSDR Project, the USACE will nourish 4 miles of beach using a sea-turtle friendly design template. The purpose of BOEM's connected action is to respond to the request for use of OCS sand in the beach nourishment, under the authority granted to the Department of the Interior by the Outer Continental Shelf Lands Act (OCSLA) (43 U.S.C. 1337(k)(2)). Under OCSLA, BOEM can convey, on a noncompetitive basis, the rights to use OCS sand, gravel, or shell resources for use in a program for shore protection, beach restoration or coastal wetland restoration undertaken by a Federal, state, or local government agency (43 U.S.C. 1337(k)(2)). The BOEM is undertaking this action to respond to the USACE's and Martin County Board of Commissioners' request to use OCS sand resources. The Secretary of the Interior delegated the authority granted in the OCSLA to BOEM.

Record of Decision

The BOEM's decision is supported by the comprehensive analysis presented in the USACE's Final SEIS. The SEIS assessed the physical, biological, and social/human impacts of the proposed project and considered a range of non-structural alternatives, including a no-action alternative, as well as impacts from proposed mitigation. The SEIS was developed cooperatively to fulfill all Federal agencies' obligations under NEPA and the environmental impacts of their connected actions were encompassed in the analysis. As the USACE is the lead agency and BOEM is a cooperating agency for the proposed action, BOEM independently reviewed and adopted the SEIS prepared by the USACE (43 CFR 46.120). The USACE published its ROD in February 2012.

The BOEM ROD summarizes the alternatives considered by BOEM, the decision BOEM made, the basis for the decision, the environmentally preferable alternative, required mitigation measures, and the process the USACE and BOEM, as a cooperating agency, undertook to involve the public and other Federal and state agencies. The decision identifies and adopts mitigation measures and monitoring requirements enforceable by BOEM and deemed practicable to avoid or minimize the environmental harm that could result from the project. In the USACE's ROD, the USACE committed to implementing the mitigation measures and monitoring requirements identified in BOEM's ROD. This action is taken with the understanding that any proposed use of OCS sand in future beach re-nourishment activities by the USACE will require a new negotiated agreement and an updated environmental analysis.

Availability of ROD

To obtain a printed copy of the ROD, you may contact BOEM, Office of Environmental Programs (HM 3107), 381 Elden Street, Herndon, Virginia 20170. An electronic copy of the ROD is available at BOEM's web site at: [*http://www.boem.gov/Non-Energy-Minerals/Marine-Minerals-Program.aspx*].

FOR FURTHER INFORMATION CONTACT: James F. Bennett, Bureau of Ocean Energy Management, Division of Environmental Assessment, 381 Elden Street, HM 3107, Herndon, Virginia 20170, (703) 787–1660, *jfbennett@boem.gov.*

Dated: April 18, 2012.

Walter D. Cruickshank,

Deputy Director, Bureau of Ocean Energy Management.

[FR Doc. 2012–10109 Filed 4–25–12; 8:45 am]

BILLING CODE 4310–VH–P

DEPARTMENT OF JUSTICE

[OMB Number 1105–NEW]

Agency Information Collection Activities: Proposed Collection; Comments Requested: Leased/Charter Flight Personnel Expedited Clearance Request

Correction

In notice document 2012–8934, appearing on page 22346 in the issue of April 13, 2012, make the following correction:

1. On page 22346, in the second column, in the first full paragraph, in the twelfth through fifteenth lines ''[The **Federal Register** will insert the date 60 days from the date this notice is published in the **Federal Register**].'' should read ''June 12, 2012.''

[FR Doc. C1–2012–8934 Filed 4–25–12; 8:45 am]

BILLING CODE 1505–01–D

DEPARTMENT OF JUSTICE

Notice of Lodging of Consent Decree Under the Comprehensive Environmental Response, Compensation and Liability Act

Notice is hereby given that on April 16, 2012, a proposed Consent Decree in *United States* v. *James Y. Saporito,* Civil Action No. 07–cv–03169, was lodged with the United States District Court for the Northern District of Illinois, Eastern Division.

In this action, the United States sought on behalf of the United States Environmental Protection Agency recovery of response costs incurred in conducting removal activities resulting from the actual or threatened releases of hazardous substances at the Crescent Plating Works Superfund Site in Chicago, Illinois, pursuant to Section 107 of the Comprehensive Environmental Response, Compensation and Liability Act, 42 U.S.C. § 9607. The Consent Decree resolves the claims between the United States and James Y. Saporito (''Settling Defendant'') for the amount of $40,000, based upon the Settling Defendant's ability to pay.

The Department of Justice will receive comments relating to this Consent Decree for a period of thirty (30) days from the date of this publication. Comments should be addressed to the Assistant Attorney General, Environment and Natural Resources Division, and either emailed to *pubcomment-ees.enrd@usdoj.gov* or mailed to P.O. Box 7611, U.S. Department of Justice, Washington, DC 20044–7611, and should refer to *United*

States v. *James Y. Saporito,* D.J. Ref. 90–11–3–08304/1.

The Consent Decree may be examined at the U.S. EPA Region 5, 77 W. Jackson Blvd., Chicago, IL 60604. During the public comment period, the Consent Decree may also be examined on the following Department of Justice Web site, *http://www.usdoj.gov/enrd/Consent_Decrees.html.* A copy of the Consent Decree may also be obtained by mail from the Consent Decree Library, U.S. Department of Justice, P.O. Box 7611, Washington, DC 20044–7611 or by faxing or emailing a request to ''Consent Decree Copy'' (*EESCDCopy.ENRD@usdoj.gov*), fax number (202) 514–0097, phone confirmation number (202) 514–5271. If requesting a copy from the Consent Decree Library, please enclose a check in the amount of $7.00 (25 cents per page reproduction cost) payable to the U.S. Treasury or, if by email or fax, forward a check in that amount to the Consent Decree Library at the address given above.

Karen Dworkin,

Assistant Chief, Environmental Enforcement Section, Environment and Natural Resources Division, United States Department of Justice.

[FR Doc. 2012–10024 Filed 4–25–12; 8:45 am]

BILLING CODE 4410–15–P

DEPARTMENT OF JUSTICE

[CPCLO Order No. 007–2012]

Privacy Act of 1974; System of Records

AGENCY: Federal Bureau of Prisons, Department of Justice.

ACTION: Modified System of Records.

SUMMARY: Pursuant to the Privacy Act of 1974 (5 U.S.C. 552a), notice is given that the Federal Bureau of Prisons (Bureau) proposes to modify in part its system of records entitled ''Inmate Central Records System, JUSTICE/BOP–005.'' The system notice, which was last published in the **Federal Register** on May 9, 2002 (67 FR 31371), and modified on January 25, 2007 (72 FR 3410), is now being modified by the Bureau for the reasons set forth below, as well as to reflect the overall modernization and technological changes of the Bureau's electronic information systems, such as SENTRY and BOPWARE, that maintain its inmate central records.

The Bureau is making the following modifications:

The Bureau clarifies in the ''System Location'' section that the records contained in this system may be located at any authorized Department of Justice location, in addition to the Central Office, Regional Offices, any of the Federal Bureau of Prisons and/or contractor-operated correctional facilities. This clarification is made to describe accurately where records from this system are located, and to reflect that the Bureau may store records at other locations, such as other Bureau administrative offices, or at any authorized Department of Justice locations.

The Bureau alters the ''Categories of Individuals Covered by the System'' to include individuals who may be committed to the custody of the Attorney General and/or the Director of the Bureau of Prisons, including those individuals under custody for criminal and civil commitments.

The Bureau is modifying and/or adding to the ''Routine Use'' section of the notice as follows:

The Bureau makes a minor amendment to more accurately cite a statutory reference in routine use (i), which allows for disclosure to the United States Department of Veterans Affairs (VA), pursuant to 38 U.S.C. 5106, Public Law 94–432, for the purpose of matching the data against VA records to determine the eligibility of Bureau inmates to receive veterans' benefits. The incorrect citation to Public Law 96–385 is removed.

The Bureau adds a routine use to clarify Bureau practice in keeping the public informed: Routine use (r) explains that information that is available as a general public record may be disclosed from this system of records, including information such as name, offense, sentence data, current and past institution confinements, and release date to the extent that it does not cause an unwarranted invasion of personal privacy. This routine use is needed in order to allow the release of information that is available as a general public record to members of the public via the Bureau's public Web site or via telephone.

The Bureau adds a routine use: Routine use (s), which permits disclosures required by statute or treaty.

The Bureau adds a routine use: Routine use (t), which permits disclosures to federal, state or community health care agencies and professionals, including physicians, psychiatrists, psychologists, and state and federal medical facility personnel, who are providing treatment for a pre-existing condition to former federal inmates, and to federal, state, or local health care agencies and professionals for the purpose of securing medical or mental health after-care for current federal inmates. This routine use is needed to permit sharing of information to these entities in order to ensure continuity of inmate medical care.

The Bureau adds a routine use: Routine use (u) will permit disclosures to the Department of State (DOS), for the purposes of matching the data against DOS records for detection/prevention of criminal activity under 18 U.S.C. 1544. This routine use was requested by the Department of State in furtherance of their mission and to ensure that inmate identities are not fraudulently misappropriated for criminal/unauthorized passport use.

The Bureau makes a slight change in the ''Safeguards'' section to clarify that only those authorized Department of Justice personnel who require access to perform their official duties may access the system equipment and the information in the system. Previously, this section referred to only Bureau staff. The Bureau makes this change to accurately reflect that this system is accessed by other authorized Department of Justice personnel.

The Bureau is adding a security classification of ''Unclassified.''

The Bureau clarifies the section ''Policies and Practices for Storing, Retrieving, Accessing, Retaining, and Disposing of Records in the System: Storage'' to account for changes in terminology and updated technology. Specifically, BOP changes ''stored in electronic media'' to ''stored electronically,'' ''client/server'' to ''servers,'' and ''magnetic tapes and/or optical disks'' to ''tape backup systems.'' BOP further clarifies that documentary (physical, ''hard copies,'' paper, etc.) records are maintained in the same method as information maintained in the system or in manual file folders, but that some older records are maintained on microfilm, microfiche, and/or index card files.

The Bureau is proposing to exempt this system of records from certain provisions of the Privacy Act pursuant to 5 U.S.C. 552a(j) and (k). Although this system of records was previously exempt from certain provisions of the Privacy Act pursuant to 5 U.S.C. 552a(j)(2), the Bureau is seeking additional exemptions pursuant to 5 U.S.C. 552a(j)(2) and adding exemptions pursuant to 5 U.S.C. 552a(k).

DATES: In accordance with 5 U.S.C. 552a(e)(4) and (11), the public is given a 30-day period in which to comment. Therefore, please submit any comments by May 29, 2012.

ADDRESSES: The public, Office of Management and Budget (OMB), and Congress are invited to submit

comments to the Department of Justice, ATTN: Privacy Analyst, Office of Privacy and Civil Liberties, National Place Building, 1331 Pennsylvania Avenue NW., Suite 1000, Washington, DC 20530–0001, or by facsimile at 202–307–0693.

FOR FURTHER INFORMATION CONTACT: C. Darnell Stroble, Attorney Advisor, Federal Bureau of Prisons, 202–514–9180.

In accordance with 5 U.S.C. 552a(r), the Department has provided a report to OMB and Congress on the modified system of records.

Dated: April 5, 2012.

Nancy C. Libin,

Chief Privacy and Civil Liberties Officer, United States Department of Justice.

JUSTICE/BOP–005

SYSTEM NAME:

Inmate Central Records System.

SECURITY CLASSIFICATION:

Unclassified.

SYSTEM LOCATION:

Records may be retained at any Department of Justice authorized location, including the Central Office, Regional Offices, any of the Federal Bureau of Prisons (Bureau) and/or any contractor-operated correctional facilities. A list of Bureau locations may be found at 28 CFR part 503 and on the Internet at *http://www.bop.gov*.

CATEGORIES OF INDIVIDUALS COVERED BY THE SYSTEM:

Individuals currently or formerly under the custody of the Attorney General and/or the Director of the Bureau of Prisons, including those individuals under custody for criminal and civil commitments.

* * * * *

ROUTINE USES OF RECORDS MAINTAINED IN THE SYSTEM, INCLUDING CATEGORIES OF USERS AND THE PURPOSES OF SUCH USES:

Relevant data from this system may be disclosed as follows:

* * * * *

(i) To the United States Department of Veterans Affairs (VA), pursuant to 38 U.S.C. 5106, Public Law 94–432, for the purpose of matching the data against VA records to determine the eligibility of Bureau inmates to receive veterans' benefits; the VA is to erase the Bureau data after the match has been made;

* * * * *

(r) To the news media and the public, including disclosures of matters solely of general public record, including name, offense, sentence data, current and past institution confinements, and release date, unless it is determined that release of the specific information would constitute an unwarranted invasion of personal privacy;

(s) To such recipients and under such circumstances and procedures as are mandated by federal statute or treaty;

(t) To federal, state or community health care agencies and professionals, including physicians, psychiatrists, psychologists, and state and federal medical facility personnel, who are providing treatment for a pre-existing condition to former federal inmates, and to federal, state, or local health care agencies and professionals for the purpose of securing medical or mental health after-care for current federal inmates.

(u) To the Department of State (DOS), for the purpose of matching the data against DOS records for detection/prevention of criminal activity under 18 U.S.C. 1544.

POLICIES AND PRACTICES FOR STORING, RETRIEVING, ACCESSING, RETAINING, AND DISPOSING OF RECORDS IN THE SYSTEM: STORAGE:

Information maintained in the system is stored electronically in Bureau facilities via a configuration of personal computers, servers, and mainframe systems architecture. Computerized records are maintained on hard disks, Compact Discs (CDs), storage area networks, or tape backup systems. Documentary (physical, ''hard copies,'' paper, etc.) records are maintained in manual file folders or electronically as described above. Some older records are maintained on microfilm, microfiche, and/or index card files.

* * * * *

SAFEGUARDS:

Information is safeguarded in accordance with Bureau rules and policy governing automated information systems security and access. These safeguards include the maintenance of records and technical equipment in restricted areas, and the required use of proper passwords and user identification codes to access the system. Only those authorized DOJ personnel who require access to perform their official duties may access the system equipment and the information in the system.

* * * * *

EXEMPTIONS CLAIMED FOR THE SYSTEM:

The Attorney General has exempted this system from subsections (c)(3) and (4); (d); (e)(1), (2), (3), (4)(G), (H), and (I), (5), (8); (f); and (g) of the Privacy Act pursuant to 5 U.S.C. 552a(j). The Attorney General has also exempted this system from subsections (c)(3); (d); (e)(1), (e)(4)(G), (H), and (I); and (f) of the Privacy Act pursuant to 5 U.S.C. 552a(k)(2). Rules have been promulgated in accordance with the requirements of 5 U.S.C. 553(b), (c) and (e) and published in today's **Federal Register**.

[FR Doc. 2012–9777 Filed 4–25–12; 8:45 am]

BILLING CODE 4410–05–P

DEPARTMENT OF JUSTICE

Drug Enforcement Administration

Importer of Controlled Substances; Notice of Application Penick Corporation

This is notice that on March 1, 2012, Penick Corporation, 33 Industrial Park Road, Pennsville, New Jersey 08070, made application by renewal to the Drug Enforcement Administration (DEA) for registration as an importer of the following basic classes of controlled substances:

Drug	Schedule
Coca Leaves (9040)	II
Raw Opium (9600)	II
Poppy Straw (9650)	II
Concentrate of Poppy Straw (9670).	II

The company plans to import the listed controlled substances to manufacture bulk controlled substance intermediates for sale to its customers.

Comments and requests for hearings on applications to import narcotic raw material are not appropriate. 72 FR 3417(2007).

As noted in a previous notice published in the **Federal Register** on September 23, 1975, 40 FR 43745, all applicants for registration to import a basic class of any controlled substance in schedule I or II are, and will continue to be, required to demonstrate to the Deputy Assistant Administrator, Office of Diversion Control, Drug Enforcement Administration, that the requirements for such registration pursuant to 21 U.S.C. 958(a); 21 U.S.C. 823(a); and 21 CFR 1301.34(b), (c), (d), (e), and (f) are satisfied.

Dated: April 17, 2012.

Joseph T. Rannazzisi,

Deputy Assistant Administrator, Office of Diversion Control, Drug Enforcement Administration.

[FR Doc. 2012–10039 Filed 4–25–12; 8:45 am]

BILLING CODE 4410–09–P

DEPARTMENT OF JUSTICE

Drug Enforcement Administration

Importer of Controlled Substances; Notice of Application; Clinical Supplies Management, Inc.

Pursuant to 21 U.S.C. 958(i), the Attorney General shall, prior to issuing a registration under this Section to a bulk manufacturer of a controlled substance in schedule I or II, and prior to issuing a regulation under 21 U.S.C. 952(a)(2) authorizing the importation of such a substance, provide manufacturers holding registrations for the bulk manufacture of the substance an opportunity for a hearing.

Therefore, in accordance with 21 CFR 1301.34(a), this is notice that on November 13, 2011, Clinical Supplies Management, Inc., 342 42nd Street South, Fargo, North Dakota 58103, made application by renewal to the Drug Enforcement Administration (DEA) to be registered as an importer of Sufentanil (9740), a basic class of controlled substance listed in schedule II.

The company plans to import the listed controlled substance with the sole purpose of packaging, labeling, and distributing to customers which are qualified clinical sites conducting clinical trials under the auspices of an FDA-approved clinical study.

Any bulk manufacturer who is presently, or is applying to be, registered with DEA to manufacture such basic class of controlled substance may file comments or objections to the issuance of the proposed registration, and may, at the same time, file a written request for a hearing on such application pursuant to 21 CFR 1301.43, and in such form as prescribed by 21 CFR 1316.47.

Any such written comments or objections should be addressed, in quintuplicate, to the Drug Enforcement Administration, Office of Diversion Control, Federal Register Representative (ODL), 8701 Morrissette Drive, Springfield, Virginia 22152; and must be filed no later than May 29, 2012.

This procedure is to be conducted simultaneously with, and independent of, the procedures described in 21 CFR 1301.34(b), (c), (d), (e), and (f). As noted in a previous notice published in the **Federal Register** on September 23, 1975, 40 FR 43745–46, all applicants for registration to import a basic class of any controlled substance in schedule I or II are, and will continue to be, required to demonstrate to the Deputy Assistant Administrator, Office of Diversion Control, Drug Enforcement Administration, that the requirements for such registration pursuant to 21 U.S.C. 958(a); 21 U.S.C. 823(a); and 21 CFR 1301.34(b), (c), (d), (e), and (f) are satisfied.

Dated: April 17, 2012.

Joseph T. Rannazzisi,

Deputy Assistant Administrator, Office of Diversion Control, Drug Enforcement Administration.

[FR Doc. 2012–10047 Filed 4–25–12; 8:45 am]

BILLING CODE 4410–09–P

DEPARTMENT OF JUSTICE

Drug Enforcement Administration

Importer of Controlled Substances; Notice of Application; Catalent Pharma Solutions, Inc.

Pursuant to 21 U.S.C. 958(i), the Attorney General shall, prior to issuing a registration under this Section to a bulk manufacturer of a controlled substance in schedule I or II, and prior to issuing a regulation under 21 U.S.C. 952(a) authorizing the importation of such a substance, provide manufacturers holding registrations for the bulk manufacture of the substance an opportunity for a hearing.

Therefore, in accordance with 21 CFR 1301.34(a), this is notice that on January 5, 2012, Catalent Pharma Solutions, Inc., 10381 Decatur Road, Philadelphia, Pennsylvania 19114, made application to the Drug Enforcement Administration (DEA) to be registered as an importer of Noroxymorphone (9668), a basic class of controlled substance listed in schedule II.

The company plans to import the listed controlled substance in finished dosage form for clinical trials.

The import of the above listed basic class of controlled substance would be granted only for analytical testing and clinical trials. This authorization does not extend to the import of a finished FDA approved or non-approved dosage form for commercial distribution in the United States.

Any bulk manufacturer who is presently, or is applying to be, registered with DEA to manufacture such basic class of controlled substance may file comments or objections to the issuance of the proposed registration and may, at the same time, file a written request for a hearing on such application pursuant to 21 CFR 1301.43, and in such form as prescribed by 21 CFR 1316.47.

Any such written comments or objections should be addressed, in quintuplicate, to the Drug Enforcement Administration, Office of Diversion Control, Federal Register Representative (ODL), 8701 Morrissette Drive, Springfield, Virginia 22152; and must be filed no later than May 29, 2012.

This procedure is to be conducted simultaneously with, and independent of, the procedures described in 21 CFR 1301.34(b), (c), (d), (e), and (f). As noted in a previous notice published in the Federal Register on September 23, 1975, 40 FR 43745–46, all applicants for registration to import a basic class of any controlled substance in schedules I or II are, and will continue to be, required to demonstrate to the Deputy Assistant Administrator, Office of Diversion Control, Drug Enforcement Administration, that the requirements for such registration pursuant to 21 U.S.C. 958(a); 21 U.S.C. 823(a); and 21 CFR 1301.34(b), (c), (d), (e), and (f) are satisfied.

Dated: April 17, 2012.

Joseph T. Rannazzisi,

Deputy Assistant Administrator, Office of Diversion Control, Drug Enforcement Administration.

[FR Doc. 2012–10046 Filed 4–25–12; 8:45 am]

BILLING CODE 4410–09–P

DEPARTMENT OF JUSTICE

Drug Enforcement Administration

Importer of Controlled Substances; Notice of Application; Rhodes Technologies

This is notice that on February 24, 2011, Rhodes Technologies, 498 Washington Street, Coventry, Rhode Island 02816, made application by renewal to the Drug Enforcement Administration (DEA) for registration as an importer of the following basic classes of controlled substances in schedule II:

Drug	Schedule
Opium, Raw (9600)	II
Poppy Straw Concentrate (9670)	II

The company plans to import the listed controlled substances in order to bulk manufacture controlled substances in Active Pharmaceutical Ingredient (API) form. The company distributes the manufactured APIs in bulk form to its customers.

Comments and requests for hearings on applications to import narcotic raw material are not appropriate. 72 FR 3417 (2007).

As noted in a previous notice published in the **Federal Register** on September 23, 1975, 40 FR 43745, all applicants for registration to import a basic class of any controlled substance

in schedules I or II are, and will continue to be, required to demonstrate to the Deputy Assistant Administrator, Office of Diversion Control, Drug Enforcement Administration, that the requirements for such registration pursuant to 21 U.S.C. 958(a); 21 U.S.C. 823(a); and 21 CFR 1301.34(b), (c), (d), (e), and (f) are satisfied.

Dated: April 17, 2012.

Joseph T. Rannazzisi,

Deputy Assistant Administrator, Office of Diversion Control, Drug Enforcement Administration.

[FR Doc. 2012–10043 Filed 4–25–12; 8:45 am]

BILLING CODE 4410–09–P

DEPARTMENT OF JUSTICE

Drug Enforcement Administration

Importer of Controlled Substances; Notice of Application; Almac Clinical Services, Inc., (ACSI)

Pursuant to 21 U.S.C. 958(i), the Attorney General shall, prior to issuing a registration under this Section to a bulk manufacturer of a controlled substance in schedule I or II, and prior to issuing a regulation under 21 U.S.C. 952(a)(2), authorizing the importation of such a substance, provide manufacturers holding registrations for the bulk manufacture of the substance an opportunity for a hearing.

Therefore, in accordance with 21 CFR 1301.34(a), this is notice that on March 5, 2012, Almac Clinical Services, Inc., (ACSI), 25 Fretz Road, Souderton, Pennsylvania 18964, made application by renewal to the Drug Enforcement Administration (DEA) to be registered as an importer of the following basic classes of controlled substances:

Drug	Schedule
Oxycodone (9143)	II
Hydromorphone (9150)	II
Tapentadol (9780)	II
Fentanyl (9801)	II

The company plans to import small quantities of the listed controlled substances in dosage form to conduct clinical trials.

Any bulk manufacturer who is presently, or is applying to be, registered with DEA to manufacture such basic classes of controlled substances may file comments or objections to the issuance of the proposed registration and may, at the same time, file a written request for a hearing on such application pursuant to 21 CFR 1301.43, and in such form as prescribed by 21 CFR 1316.47.

Any such written comments or objections should be addressed, in quintuplicate, to the Drug Enforcement Administration, Office of Diversion Control, Federal Register Representative (ODL), 8701 Morrissette Drive, Springfield, Virginia 22152; and must be filed no later than May 29, 2012.

This procedure is to be conducted simultaneously with, and independent of, the procedures described in 21 CFR 1301.34(b), (c), (d), (e), and (f). As noted in a previous notice published in the **Federal Register** on September 23, 1975, 40 FR 43745–46, all applicants for registration to import the basic class of any controlled substance in schedule I or II are, and will continue to be, required to demonstrate to the Deputy Assistant Administrator, Office of Diversion Control, Drug Enforcement Administration, that the requirements for such registration pursuant to 21 U.S.C. 958(a); 21 U.S.C. 823(a); and 21 CFR 1301.34(b), (c), (d), (e), and (f) are satisfied.

Dated: April 17, 2012.

Joseph T. Rannazzisi,

Deputy Assistant Administrator, Office of Diversion Control, Drug Enforcement Administration.

[FR Doc. 2012–10053 Filed 4–25–12; 8:45 am]

BILLING CODE 4410–09–P

DEPARTMENT OF JUSTICE

Drug Enforcement Administration

Importer of Controlled Substances; Notice of Registration; Hospira Inc.

By Notice dated December 5, 2011, and published in the **Federal Register** on December 12, 2011, 76 FR 77253, Hospira Inc., 1776 North Centennial Drive, McPherson, Kansas 67460–1247, made application by renewal to the Drug Enforcement Administration (DEA) to be registered as an importer of Remifentanil (9739), a basic class of controlled substance listed in schedule II.

The company plans to import Remifentanil for use in dosage form manufacturing.

No comments or objections have been received. DEA has considered the factors in 21 U.S.C. 823(a) and 952(a), and determined that the registration of Hospira Inc. to import the basic class of controlled substance is consistent with the public interest, and with United States obligations under international treaties, conventions, or protocols in effect on May 1, 1971, at this time. DEA has investigated Hospira Inc. to ensure that the company's registration is consistent with the public interest. The investigation has included inspection and testing of the company's physical security systems, verification of the company's compliance with state and local laws, and a review of the company's background and history. Therefore, pursuant to 21 U.S.C. 952(a) and 958(a), and in accordance with 21 CFR 1301.34, the above named company is granted registration as an importer of the basic class of controlled substance listed.

Dated: April 17, 2012.

Joseph T. Rannazzisi,

Deputy Assistant Administrator, Office of Diversion Control, Drug Enforcement Administration.

[FR Doc. 2012–10048 Filed 4–25–12; 8:45 am]

BILLING CODE 4410–09–P

DEPARTMENT OF JUSTICE

Drug Enforcement Administration

Importer of Controlled Substances; Notice of Registration; ISP Freetown Fine Chemicals

By Notice dated October 8, 2010, and published in the **Federal Register** on October 20, 2010, 75 FR 64743, ISP Freetown Fine Chemicals, 238 South Main Street, Assonet, Massachusetts 02702, made application by renewal to the Drug Enforcement Administration (DEA) to be registered as an importer of Phenylacetone (8501), a basic class of controlled substance listed in schedule II.

The company plans to import the controlled substance to manufacture amphetamine.

No comments or objections have been received. DEA has considered the factors in 21 U.S.C. 823(a) and 952(a), and determined that the registration of ISP Freetown Fine Chemicals to import the basic class of controlled substance is consistent with the public interest, and with United States obligations under international treaties, conventions, or protocols in effect on May 1, 1971, at this time. DEA has investigated ISP Freetown Fine Chemicals to ensure that the company's registration is consistent with the public interest. The investigation has included inspection and testing of the company's physical security systems, verification of the company's compliance with state and local laws, and a review of the company's background and history. Therefore, pursuant to 21 U.S.C. 952(a) and 958(a), and in accordance with 21 CFR 1301.34, the above named company is granted registration as an importer of the basic class of controlled substance listed.

Dated: April 17, 2012.

Joseph T. Rannazzisi,

Deputy Assistant Administrator, Office of Diversion Control, Drug Enforcement Administration.

[FR Doc. 2012–10052 Filed 4–25–12; 8:45 am]

BILLING CODE 4410–09–P

DEPARTMENT OF JUSTICE

Drug Enforcement Administration

Manufacturer of Controlled Substances; Notice of Application; Penick Corporation

Pursuant to § 1301.33(a), Title 21 of the Code of Federal Regulations (CFR), this is notice that on March 1, 2012, Penick Corporation, 33 Industrial Park Road, Pennsville, New Jersey 08070, made application by renewal to the Drug Enforcement Administration (DEA) to be registered as a bulk manufacturer of the following basic classes of controlled substances:

Drug	Schedule
Cocaine (9041)	II
Codeine (9050)	II
Dihydrocodeine (9120)	II
Oxycodone (9143)	II
Hydromorphone (9150)	II
Ecgonine (9180)	II
Hydrocodone (9193)	II
Morphine (9300)	II
Oripavine (9330)	II
Thebaine (9333)	II
Oxymorphone (9652)	II

The company plans to manufacture the listed controlled substances as bulk controlled substance intermediates for distribution to its customers.

Any other such applicant, and any person who is presently registered with DEA to manufacture such substances, may file comments or objections to the issuance of the proposed registration pursuant to 21 CFR 1301.33(a).

Any such written comments or objections should be addressed, in quintuplicate, to the Drug Enforcement Administration, Office of Diversion Control, Federal Register Representative (ODL), 8701 Morrissette Drive, Springfield, Virginia 22152; and must be filed no later than June 25, 2012.

Dated: April 17, 2012.

Joseph T. Rannazzisi,

Deputy Assistant Administrator, Office of Diversion Control, Drug Enforcement Administration.

[FR Doc. 2012–10040 Filed 4–25–12; 8:45 am]

BILLING CODE 4410–09–P

DEPARTMENT OF JUSTICE

Drug Enforcement Administration

Manufacturer of Controlled Substances; Notice of Application; Cambrex Charles City, Inc.

Pursuant to § 1301.33(a), Title 21 of the Code of Federal Regulations (CFR), this is notice that on November 30, 2011, Cambrex Charles City, Inc., 1205 11th Street, Charles City, Iowa 50616, made application by letter to the Drug Enforcement Administration (DEA) to be registered as a bulk manufacturer of the following basic classes of controlled substances:

Drug	Schedule
Cocaine (9041)	II
Opium tincture (9630)	II

The company plans to manufacture the listed controlled substances in bulk for sale to its customers.

Any other such applicant, and any person who is presently registered with DEA to manufacture such substances, may file comments or objections to the issuance of the proposed registration pursuant to 21 CFR 1301.33(a).

Any such written comments or objections should be addressed, in quintuplicate, to the Drug Enforcement Administration, Office of Diversion Control, Federal Register Representative (ODL), 8701 Morrissette Drive, Springfield, Virginia 22152; and must be filed no later than June 25, 2012.

Dated: April 17, 2012.

Joseph T. Rannazzisi,

Deputy Assistant Administrator, Office of Diversion Control, Drug Enforcement Administration.

[FR Doc. 2012–10059 Filed 4–25–12; 8:45 am]

BILLING CODE 4410–09–P

DEPARTMENT OF JUSTICE

Drug Enforcement Administration

Manufacturer of Controlled Substances; Notice of Application; Cambrex Charles City, Inc.

Pursuant to § 1301.33(a), Title 21 of the Code of Federal Regulations (CFR), this is notice that on November 30, 2011, Cambrex Charles City, Inc., 1205 11th Street, Charles City, Iowa 50616, made application by letter to the Drug Enforcement Administration (DEA) to be registered as a bulk manufacturer of the following basic classes of controlled substances:

Drug	Schedule
Hydrocodone (9193)	II
Methadone (9250)	II

The company plans to manufacture the listed controlled substances in bulk for sale to its customers.

Any other such applicant, and any person who is presently registered with DEA to manufacture such substances, may file comments or objections to the issuance of the proposed registration pursuant to 21 CFR 1301.33(a).

Any such written comments or objections should be addressed, in quintuplicate, to the Drug Enforcement Administration, Office of Diversion Control, Federal Register Representative (ODL), 8701 Morrissette Drive, Springfield, Virginia 22152; and must be filed no later than June 25, 2012.

Dated: April 17, 2012.

Joseph T. Rannazzisi,

Deputy Assistant Administrator, Office of Diversion Control, Drug Enforcement Administration.

[FR Doc. 2012–10057 Filed 4–25–12; 8:45 am]

BILLING CODE 4410–09–P

DEPARTMENT OF JUSTICE

Drug Enforcement Administration

Manufacturer of Controlled Substances; Notice of Application Rhodes Technologies

Pursuant to § 1301.33(a), Title 21 of the Code of Federal Regulations (CFR), this is notice that on February 24, 2012, Rhodes Technologies, 498 Washington Street, Coventry, Rhode Island 02816, made application by renewal to the Drug Enforcement Administration (DEA) to be registered as a bulk manufacturer of the following basic classes of controlled substances:

Drug	Schedule
Tetrahydrocannabinols (7370)	I
Methylphenidate (1724)	II
Codeine (9050)	II
Dihydrocodeine (9120)	II
Oxycodone (9143)	II
Hydromorphone (9150)	II
Hydrocodone (9193)	II
Oripavine (9330)	II
Thebaine (9333)	II
Oxymorphone (9652)	II
Noroxymorphone (9668)	II
Fentanyl (9801)	II

The company plans to manufacture the listed controlled substances in bulk for conversion and sale to dosage form manufacturers.

Any other such applicant, and any person who is presently registered with

DEA to manufacture such substances, may file comments or objections to the issuance of the proposed registration pursuant to 21 CFR 1301.33(a).

Any such written comments or objections should be addressed, in quintuplicate, to the Drug Enforcement Administration, Office of Diversion Control, Federal Register Representative (ODL), 8701 Morrissette Drive, Springfield, Virginia 22152; and must be filed no later than June 25, 2012.

Dated: April 17, 2012.

Joseph T. Rannazzisi,

Deputy Assistant Administrator, Office of Diversion Control, Drug Enforcement Administration.

[FR Doc. 2012–10054 Filed 4–25–12; 8:45 am]

BILLING CODE 4410–09–P

DEPARTMENT OF JUSTICE

Drug Enforcement Administration

Manufacturer of Controlled Substances; Notice of Registration; Cerilliant Corporation

By Notice dated January 5, 2012, and published in the **Federal Register** on January 17, 2012, 77 FR 2321, Cerilliant Corporation, 811 Paloma Drive, Suite A, Round Rock, Texas 78665–2402, made application by renewal to the Drug Enforcement Administration (DEA) to be registered as a bulk manufacturer of the following basic classes of controlled substances:

Drug	Schedule
Cathinone (1235)	I
Methcathinone (1237)	I
N-Ethylamphetamine (1475)	I
N,N-Dimethylamphetamine (1480)	I
Aminorex (1585)	I
4-Methylaminorex (cis isomer) (1590).	I
Gamma-Hydroxybutyric acid (2010).	I
Methaqualone (2565)	I
1-Pentyl-3-(1-naphthoyl)indole (7118).	I
1-Butyl-3-(1-naphthoyl)indole (7173).	I
1-[2-(4-Morpholinyl)ethyl]-3-(1-naphthoyl) Indole (7200).	I
Alpha-ethyltryptamine (7249)	I
5-(1,1-Dimethylheptyl)-2-[{1R,3S)-3-hydroxycyclohexyl]-phenol (7297).	I
5-(1,1-Dimethyloctyl)-2-[{1R,3S)-3-hydroxycyclohexyl]-phenol (7298).	
Lysergic acid diethylamide (7315)	I
2,5-Dimethoxy-4-(n)-propylthiophenethylamine (7348).	I
Marihuana (7360)	I
Tetrahydrocannabinols (7370)	I
Mescaline (7381)	I
3,4,5-Trimethoxyamphetamine (7390).	I
4-Bromo-2,5-dimethoxyamphetamine (7391).	I
4-Bromo-2,5-dimethoxyphenethylamine (7392).	I
4-Methyl-2,5-dimethoxyamphetamine (7395).	I
2,5-Dimethoxyamphetamine (7396).	I
2,5-Dimethoxy-4-ethylamphetamine (7399).	I
3,4-Methylenedioxyamphetamine (7400).	I
5-Methoxy-3,4-methylenedioxyamphetamine (7401).	I
N-Hydroxy-3,4-methylendioxyamphetamine (7402).	I
3,4-Methylendioxy-N-ethylamphetamine (7404).	I
3,4-Methylenedioxymethamphetamine (7405).	I
4-Methoxyamphetamine (7411)	I
5-Methoxy-N-N-dimethyltryptamine (7431).	I
Alpha-methyltryptamine (7432)	I
Bufotenine (7433)	I
Diethyltryptamine (7434)	I
Dimethyltryptamine (7435)	I
Psilocybin (7437)	I
Psilocyn (7438)	I
5-Methoxy-N,N-diisopropyltryptamine (7439).	I
N-Benzylpiperazine (7493)	I
Acetyldihydrocodeine (9051)	I
Benzylmorphine (9052)	I
Codeine-N-oxide (9053)	I
Dihydromorphine (9145)	I
Heroin (9200)	I
Hydromorphinol (9301)	I
Methyldihydromorphine (9304)	I
Morphine-N-oxide (9307)	I
Normorphine (9313)	I
Pholcodine (9314)	I
Acetylmethadol (9601)	I
Allylprodine (9602)	I
Alphacetylmethadol except levo-alphacetylmethadol (9603).	I
Alphameprodine (9604)	I
Alphamethadol (9605)	I
Betacetylmethadol (9607)	I
Betameprodine (9608)	I
Betamethadol (9609)	I
Betaprodine (9611)	I
Hydroxypethidine (9627)	I
Noracymethadol (9633)	I
Norlevorphanol (9634)	I
Normethadone (9635)	I
Trimeperidine (9646)	I
Phenomorphan (9647)	I
1-Methyl-4-phenyl-4-propionoxypiperidine (9661).	I
Tilidine (9750)	I
Para-Fluorofentanyl (9812)	I
3-Methylfentanyl (9813)	I
Alpha-Methylfentanyl (9814)	I
Acetyl-alpha-methylfentanyl (9815).	I
Beta-hydroxyfentanyl (9830)	I
Beta-hydroxy-3-methylfentanyl (9831).	I
Alpha-Methylthiofentanyl (9832)	I
3-Methylthiofentanyl (9833)	I
Thiofentanyl (9835)	I
Amphetamine (1100)	II
Methamphetamine (1105)	II
Lisdexamfetamine (1205)	II
Phenmetrazine (1631)	II
Methylphenidate (1724)	II
Amobarbital (2125)	II
Pentobarbital (2270)	II
Secobarbital (2315)	II
Glutethimide (2550)	II
Nabilone (7379)	II
1-Phenylcyclohexylamine (7460)	II
Phencyclidine (7471)	II
1-Piperidinocyclohexanecarbonitrile (8603).	II
Alphaprodine (9010)	II
Cocaine (9041)	II
Codeine (9050)	II
Dihydrocodeine (9120)	II
Oxycodone (9143)	II
Hydromorphone (9150)	II
Diphenoxylate (9170)	II
Benzoylecgonine (9180)	II
Ethylmorphine (9190)	II
Hydrocodone (9193)	II
Levomethorphan (9210)	II
Levorphanol (9220)	II
Isomethadone (9226)	II
Meperidine (9230)	II
Meperidine intermediate-A (9232)	II
Meperidine intermediate-B (9233)	II
Meperidine intermediate-C (9234)	II
Methadone (9250)	II
Methadone intermediate (9254)	II
Dextropropoxyphene, bulk (non-dosage forms) (9273).	II
Morphine (9300)	II
Thebaine (9333)	II
Levo-alphacetylmethadol (9648)	II
Oxymorphone (9652)	II
Noroxymorphone (9668)	II
Racemethorphan (9732)	II
Alfentanil (9737)	II
Sufentanil (9740)	II
Tapentadol (9780)	II
Fentanyl (9801)	II

The company plans to manufacture small quantities of the listed controlled substances to make reference standards which will be distributed to their customers.

No comments or objections have been received. DEA has considered the factors in 21 U.S.C. 823(a), and determined that the registration of Cerilliant Corporation to manufacture the listed basic classes of controlled substances is consistent with the public interest at this time. DEA has investigated Cerilliant Corporation to ensure that the company's registration is consistent with the public interest. The investigation has included inspection and testing of the company's physical security systems, verification of the company's compliance with state and

local laws, and a review of the company's background and history. Therefore, pursuant to 21 U.S.C. 823(a), and in accordance with 21 CFR 1301.33, the above named company is granted registration as a bulk manufacturer of the basic classes of controlled substances listed.

Dated: April 17, 2012.

Joseph T. Rannazzisi,

Deputy Assistant Administrator, Office of Diversion Control, Drug Enforcement Administration.

[FR Doc. 2012–10041 Filed 4–25–12; 8:45 am]

BILLING CODE 4410–09–P

DEPARTMENT OF JUSTICE

Drug Enforcement Administration

Manufacturer of Controlled Substances; Notice of Registration; ISP Freetown Fine Chemicals

By Notice dated October 8, 2010, and published in the **Federal Register** on October 20, 2010, 75 FR 64746, ISP Freetown Fine Chemicals, 238 South Main Street, Assonet, Massachusetts 02702, made application by renewal to the Drug Enforcement Administration (DEA) to be registered as a bulk manufacturer of the following basic classes of controlled substances:

Drug	Schedule
2,5–Dimethoxyamphetamine (7396).	I
Amphetamine (1100)	II
Phenylacetone (8501)	II

The company plans to manufacture bulk API, for distribution to its customers. The bulk 2,5-Dimethoxyamphetamine will be used for conversion into non-controlled substances.

No comments or objections have been received. DEA has considered the factors in 21 U.S.C. 823(a) and determined that the registration of ISP Freetown Fine Chemicals, to manufacture the listed basic classes of controlled substances is consistent with the public interest at this time. DEA has investigated ISP Freetown Fine Chemicals to ensure that the company's registration is consistent with the public interest. The investigation has included inspection and testing of the company's physical security systems, verification of the company's compliance with state and local laws, and a review of the company's background and history. Therefore, pursuant to 21 U.S.C. 823(a), and in accordance with 21 CFR 1301.33, the above named company is granted registration as a bulk manufacturer of the basic classes of controlled substances listed.

Dated: April 17, 2012.

Joseph T. Rannazzisi,

Deputy Assistant Administrator, Office of Diversion Control, Drug Enforcement Administration.

[FR Doc. 2012–10055 Filed 4–25–12; 8:45 am]

BILLING CODE 4410–09–P

DEPARTMENT OF JUSTICE

Drug Enforcement Administration

Manufacturer of Controlled Substances; Notice of Registration; Johnson Matthey Pharma Services

By Notice dated December 5, 2011, and published in the **Federal Register** on December 12, 2011, 76 FR 77257, Johnson Matthey Pharma Services, 70 Flagship Drive, North Andover, Massachusetts 01845, made application by renewal to the Drug Enforcement Administration (DEA) to be registered as a bulk manufacturer of the following basic classes of controlled substances:

Drug	Schedule
Amphetamine (1100)	II
Methylphenidate (1724)	II
Hydrocodone (9193)	II

The company plans to utilize this facility to manufacture small quantities of the listed controlled substances in bulk and to conduct analytical testing in support of the company's primary manufacturing facility in West Deptford, New Jersey. The controlled substances manufactured in bulk at this facility will be distributed to the company's customers.

No comments or objections have been received. DEA has considered the factors in 21 U.S.C. 823(a) and determined that the registration of Johnson Matthey Pharma Services to manufacture the listed basic classes of controlled substances is consistent with the public interest at this time. DEA has investigated Johnson Matthey Pharma Services to ensure that the company's registration is consistent with the public interest. The investigation has included inspection and testing of the company's physical security systems, verification of the company's compliance with state and local laws, and a review of the company's background and history. Therefore, pursuant to 21 U.S.C. 823(a), and in accordance with 21 CFR 1301.33, the above named company is granted registration as a bulk manufacturer of the basic classes of controlled substances listed.

Dated: April 17, 2012.

Joseph T. Rannazzisi,

Deputy Assistant Administrator, Office of Diversion Control, Drug Enforcement Administration.

[FR Doc. 2012–10051 Filed 4–25–12; 8:45 am]

BILLING CODE 4410–09–P

DEPARTMENT OF JUSTICE

Drug Enforcement Administration

Manufacturer of Controlled Substances; Notice of Registration; Johnson Matthey Inc.

By Notice dated November 21, 2011, and published in the **Federal Register** on November 29, 2011, 76 FR 73679, Johnson Matthey Inc., Pharmaceuticals Materials, 900 River Road, Conshohocken, Pennsylvania 19428, made application by letter to the Drug Enforcement Administration (DEA) to be registered as a bulk manufacturer of the following basic classes of controlled substances:

Drug	Schedule
Diphenoxylate (9170)	II
Meperidine (9230)	II
Methadone (9250)	II
Methadone Intermediate (9254)	II

The company plans to manufacture the listed controlled substances in bulk for distribution and sale to its customers.

No comments or objections have been received. DEA has considered the factors in 21 U.S.C. 823(a) and determined that the registration of Johnson Matthey Inc. to manufacture the listed basic classes of controlled substances is consistent with the public interest at this time. DEA has investigated Johnson Matthey Inc. to ensure that the company's registration is consistent with the public interest. The investigation has included inspection and testing of the company's physical security systems, verification of the company's compliance with state and local laws, and a review of the company's background and history. Therefore, pursuant to 21 U.S.C. 823(a), and in accordance with 21 CFR 1301.33, the above named company is granted registration as a bulk manufacturer of the basic classes of controlled substances listed.

Dated: April 17, 2012.

Joseph T. Rannazzisi,

Deputy Assistant Administrator, Office of Diversion Control, Drug Enforcement Administration.

[FR Doc. 2012–10050 Filed 4–25–12; 8:45 am]

BILLING CODE 4410–09–P

DEPARTMENT OF LABOR

Office of the Secretary

Agency Information Collection Activities; Submission for OMB Review; Comment Request; ERISA Procedure 76–1; Advisory Opinion Procedure

ACTION: Notice.

SUMMARY: The Department of Labor (DOL) is submitting the Employee Benefits Security Administration (EBSA) sponsored information collection request (ICR) titled, ''ERISA Procedure 76–1; Advisory Opinion Procedure,'' to the Office of Management and Budget (OMB) for review and approval for continued use in accordance with the Paperwork Reduction Act (PRA) of 1995 (44 U.S.C. 3501 et seq.).

DATES: Submit comments on or before May 29, 2012.

ADDRESSES: A copy of this ICR with applicable supporting documentation; including a description of the likely respondents, proposed frequency of response, and estimated total burden may be obtained from the RegInfo.gov Web site, *http://www.reginfo.gov/public/do/PRAMain,* on the day following publication of this notice or by contacting Michel Smyth by telephone at 202–693–4129 (this is not a toll-free number) or sending an email to *DOL_PRA_PUBLIC@dol.gov.*

Submit comments about this request to the Office of Information and Regulatory Affairs, Attn: OMB Desk Officer for DOL–EBSA, Office of Management and Budget, Room 10235, Washington, DC 20503, Telephone: 202–395–6929/Fax: 202–395–6881 (these are not toll-free numbers), email: *OIRA_submission@omb.eop.gov.*

FOR FURTHER INFORMATION CONTACT: Contact Michel Smyth by telephone at 202–693–4129 (this is not a toll-free number) or by email at *DOL_PRA_PUBLIC@dol.gov.*

SUPPLEMENTARY INFORMATION: Under the Employee Income Security Act of 1974 (ERISA), the EBSA has responsibility to administer the reporting, disclosure, fiduciary, and other standards for pension and welfare benefit plans. The procedure for ERISA advisory opinions establishes a public process for requesting guidance from the EBSA on how the ERISA applies to particular circumstances. The procedure sets forth specific administrative processes for requesting either an advisory opinion or an information letter and describes the types of questions that may be submitted. As part of the procedure, requesters are instructed to provide information to the EBSA concerning the circumstances governing their request. The EBSA relies on the information provided by the requester to analyze the issue presented and provide guidance.

This information collection is subject to the PRA. A Federal agency generally cannot conduct or sponsor a collection of information, and the public is generally not required to respond to an information collection, unless it is approved by the OMB under the PRA and displays a currently valid OMB Control Number. In addition, notwithstanding any other provisions of law, no person shall generally be subject to penalty for failing to comply with a collection of information if the collection of information does not display a valid OMB Control Number. *See* 5 CFR 1320.5(a) and 1320.6. The DOL obtains OMB approval for this information collection under OMB Control Number 1210–0066. The current OMB approval is scheduled to expire on June 30, 2012; however, it should be noted that existing information collection requirements submitted to the OMB receive a month-to-month extension while they undergo review. For additional information, see the related notice published in the **Federal Register** on December 7, 2011 (76 FR 76439).

Interested parties are encouraged to send comments to the OMB, Office of Information and Regulatory Affairs at the address shown in the **ADDRESSES** section within 30 days of publication of this notice in the **Federal Register**. In order to help ensure appropriate consideration, comments should reference OMB Control Number 1210–0066. The OMB is particularly interested in comments that:

- Evaluate whether the proposed collection of information is necessary for the proper performance of the functions of the agency, including whether the information will have practical utility;
- Evaluate the accuracy of the agency's estimate of the burden of the proposed collection of information, including the validity of the methodology and assumptions used;
- Enhance the quality, utility, and clarity of the information to be collected; and
- Minimize the burden of the collection of information on those who are to respond, including through the use of appropriate automated, electronic, mechanical, or other technological collection techniques or other forms of information technology, e.g., permitting electronic submission of responses.

Agency: DOL–EBSA.

Title of Collection: ERISA Procedure 76–1; Advisory Opinion Procedure.

OMB Control Number: 1210–0066.

Affected Public: Private Sector—Businesses or Other For-Profits.

Total Estimated Number of Respondents: 56.

Total Estimated Number of Responses: 56.

Total Estimated Annual Burden Hours: 573.

Total Estimated Annual Other Costs Burden: $1,250,218.

Dated: April 19, 2012.

Michel Smyth,

Departmental Clearance Officer.

[FR Doc. 2012–9980 Filed 4–25–12; 8:45 am]

BILLING CODE 4510–29–P

DEPARTMENT OF LABOR

Office of the Secretary

Agency Information Collection Activities; Submission for OMB Review; Comment Request; Notice of Blackout Period Under ERISA

ACTION: Notice.

SUMMARY: The Department of Labor (DOL) is submitting the Employee Benefits Security Administration (EBSA) sponsored information collection request (ICR) titled, ''Notice of Blackout Period Under ERISA,'' to the Office of Management and Budget (OMB) for review and approval for continued use in accordance with the Paperwork Reduction Act (PRA) of 1995 (44 U.S.C. 3501 et seq.).

DATES: Submit comments on or before May 29, 2012.

ADDRESSES: A copy of this ICR with applicable supporting documentation; including a description of the likely respondents, proposed frequency of response, and estimated total burden may be obtained from the RegInfo.gov Web site, *http://www.reginfo.gov/public/do/PRAMain,* on the day following publication of this notice or by contacting Michel Smyth by telephone at 202–693–4129 (this is not a toll-free number) or sending an email to *DOL_PRA_PUBLIC@dol.gov.*

Submit comments about this request to the Office of Information and Regulatory Affairs, Attn: OMB Desk Officer for DOL–EBSA, Office of Management and Budget, Room 10235, Washington, DC 20503, Telephone: 202–395–6929/Fax: 202–395–6881 (these are not toll-free numbers), email: *OIRA_submission@omb.eop.gov.*

FOR FURTHER INFORMATION CONTACT: Contact Michel Smyth by telephone at 202–693–4129 (this is not a toll-free number) or by email at *DOL_PRA_PUBLIC@dol.gov.*

SUPPLEMENTARY INFORMATION: The Sarbanes-Oxley Act of 2002 amended Employee Income Security Act of 1974 section 101 to require plan administrators to furnish affected participants and beneficiaries of individual account pension plans with advance written notice of a ''blackout period'' during which the right to direct or diversify investments or obtain a loan or distribution may be temporarily suspended. The EBSA codified the corresponding regulatory requirement at 29 CFR 2520.101–3.

This information collection is subject to the PRA. A Federal agency generally cannot conduct or sponsor a collection of information, and the public is generally not required to respond to an information collection, unless it is approved by the OMB under the PRA and displays a currently valid OMB Control Number. In addition, notwithstanding any other provisions of law, no person shall generally be subject to penalty for failing to comply with a collection of information if the collection of information does not display a valid OMB Control Number. *See* 5 CFR 1320.5(a) and 1320.6. The DOL obtains OMB approval for this information collection under OMB Control Number 1210–0122. The current OMB approval is scheduled to expire on June 30, 2012; however, it should be noted that existing information collection requirements submitted to the OMB receive a month-to-month extension while they undergo review. For additional information, see the related notice published in the **Federal Register** on December 7, 2011 (76 FR 76439).

Interested parties are encouraged to send comments to the OMB, Office of Information and Regulatory Affairs at the address shown in the **ADDRESSES** section within 30 days of publication of this notice in the **Federal Register**. In order to help ensure appropriate consideration, comments should reference OMB Control Number 1210–0122. The OMB is particularly interested in comments that:

- Evaluate whether the proposed collection of information is necessary for the proper performance of the functions of the agency, including whether the information will have practical utility;
- Evaluate the accuracy of the agency's estimate of the burden of the proposed collection of information, including the validity of the methodology and assumptions used;
- Enhance the quality, utility, and clarity of the information to be collected; and
- Minimize the burden of the collection of information on those who are to respond, including through the use of appropriate automated, electronic, mechanical, or other technological collection techniques or other forms of information technology, e.g., permitting electronic submission of responses.

Agency: DOL–EBSA.

Title of Collection: Notice of Blackout Period Under ERISA.

OMB Control Number: 1210–0122.

Affected Public: Private Sector—Businesses or Other For-Profits.

Total Estimated Number of Respondents: 46,200.

Total Estimated Number of Responses: 6,100,000.

Total Estimated Annual Burden Hours: 195,800.

Total Estimated Annual Other Costs Burden: $1,900,000.

Dated: April 20, 2012.

Michel Smyth,

Departmental Clearance Officer.

[FR Doc. 2012–9981 Filed 4–25–12; 8:45 am]

BILLING CODE 4510–29–P

DEPARTMENT OF LABOR

Public Availability of the Department of Labor FY 2011 Service Contract Inventory

AGENCY: Office of Assistant Secretary for Administration and Management, Department of Labor.

ACTION: Notice of Public Availability of FY 2011 Service Contract Inventories.

SUMMARY: In accordance with Section 743 of Division C of the Consolidated Appropriations Act of 2010 (Pub. L. 111–117), Department of Labor (DOL) is publishing this notice to advise the public of the availability of its FY 2011 Service Contract Inventory. This inventory provides information on service contract actions over $25,000 made in FY 2011. The information is organized by function to show how contracted resources are distributed throughout the agency. The inventory has been developed in accordance with guidance issued on November 5, 2010 by the Office of Management and Budget's Office of Federal Procurement Policy (OFPP). OFPP's guidance is available at *http://www.whitehouse.gov/sites/default/files/omb/procurement/memo/service-contract-inventories-guidance-11052010.pdf.* DOL has posted its inventory and a summary of the inventory on the DOL homepage at *http://www.dol.gov/dol/aboutdol/main.htm#inventory.*

FOR FURTHER INFORMATION CONTACT: Questions regarding the service contract inventory should be directed to Gladys M. Bailey in the DOL/Office of Acquisition Management Services on (202) 693–7244 or *bailey.gladys@dol.gov.*

Dated: April 19, 2012.

Edward Hugler,

Deputy Assistant Secretary for Operations.

[FR Doc. 2012–10018 Filed 4–25–12; 8:45 am]

BILLING CODE 4510–23–P

DEPARTMENT OF LABOR

Occupational Safety and Health Administration

[Docket No. OSHA–2012–0016]

Marine Terminals and Longshoring Standards; Extension of the Office of Management and Budget's (OMB) Approval of Information Collection (Paperwork) Requirements

AGENCY: Occupational Safety and Health Administration (OSHA), Labor.

ACTION: Request for public comments.

SUMMARY: OSHA solicits public comments concerning its proposal to extend OMB approval of the information collection requirements contained in the Standards on Marine Terminals (29 CFR part 1917) and Longshoring (29 CFR part 1918).

DATES: Comments must be submitted (postmarked, sent, or received) by June 25, 2012.

ADDRESSES:

Electronically: You may submit comments and attachments electronically at *http://www.regulations.gov,* which is the Federal eRulemaking Portal. Follow the instructions online for submitting comments.

Facsimile: If your comments, including attachments, are not longer than 10 pages, you may fax them to the OSHA Docket Office at (202) 693–1648.

Mail, hand delivery, express mail, messenger, or courier service: When using this method, you must submit three copies of your comments and attachments to the OSHA Docket Office, Docket No. OSHA–2012–0016, U.S. Department of Labor, Occupational Safety and Health Administration, Room N–2625, 200 Constitution Avenue NW., Washington, DC 20210. Deliveries (hand, express mail, messenger, and courier service) are accepted during the

Department of Labor's and Docket Office's normal business hours, 8:15 a.m. to 4:45 p.m., e.t.

Instructions: All submissions must include the Agency name and OSHA docket number (OSHA–2012–0016) for the Information Collection Request (ICR). All comments, including any personal information you provide, are placed in the public docket without change, and may be made available online at *http://www.regulations.gov.* For further information on submitting comments see the ''Public Participation'' heading in the section of this notice titled **SUPPLEMENTARY INFORMATION**.

Docket: To read or download comments or other material in the docket, go to *http://www.regulations.gov* or the OSHA Docket Office at the address above. All documents in the docket (including this **Federal Register** notice) are listed in the *http://www.regulations.gov* index; however, some information (e.g., copyrighted material) is not publicly available to read or download through the Web site. All submissions, including copyrighted material, are available for inspection and copying at the OSHA Docket Office. You may also contact Theda Kenney at the address below to obtain a copy of the ICR.

FOR FURTHER INFORMATION CONTACT: Theda Kenney or Todd Owen, Directorate of Standards and Guidance, OSHA, U.S. Department of Labor, Room N–3609, 200 Constitution Avenue NW., Washington, DC 20210; telephone (202) 693–2222.

SUPPLEMENTARY INFORMATION:

I. Background

The Department of Labor, as part of its continuing effort to reduce paperwork and respondent (i.e., employer) burden, conducts a preclearance consultation program to provide the public with an opportunity to comment on proposed and continuing information collection requirements in accordance with the Paperwork Reduction Act of 1995 (44 U.S.C. 3506(c)(2)(A)). This program ensures that information is in the desired format, reporting burden (time and costs) is minimal, collection instruments are clearly understood, and OSHA's estimate of the information collection burden is accurate. The Occupational Safety and Health Act of 1970 (the OSH Act) (29 U.S.C. 651 *et seq.*) authorizes information collection by employers as necessary or appropriate for enforcement of the OSH Act or for developing information regarding the causes and prevention of occupational injuries, illnesses, and accidents (29 U.S.C. 657). The OSH Act also requires that OSHA obtain such information with minimum burden upon employers, especially those operating small businesses, and to reduce to the maximum extent feasible unnecessary duplication of efforts in obtaining information (29 U.S.C. 657).

The Standards on Marine Terminals and Longshoring contain a number of collections of information which are used by employers to ensure that employees are informed properly about the safety and health hazards associated with marine terminals and longshoring operations. OSHA uses the records developed in response to the collection of information requirements to find out if the employer is complying adequately with the provisions of the standards.

II. Special Issues for Comment

OSHA has a particular interest in comments on the following issues:

- Whether the proposed information collection requirements are necessary for the proper performance of the Agency's functions, including whether the information is useful;
- The accuracy of OSHA's estimate of the burden (time and costs) of the information collection requirements, including the validity of the methodology and assumptions used;
- The quality, utility, and clarity of the information collected; and
- Ways to minimize the burden on employers who must comply; for example, by using automated or other technological information collection and transmission techniques.

III. Proposed Actions

OSHA is requesting that OMB extend its approval of the information collection requirements contained in the Standards on Marine Terminals (29 CFR part 1917) and Longshoring (29 CFR part 1918). The Agency is requesting an increase in its current burden hour estimate from 35,948 hours to 47,398 hours, a difference of 11,450 hours. This increase in the burden hours is due to an increase in longshoring operations from 501 to 808 establishments. The Agency will summarize any comments submitted in response to this notice and will include this summary in its request to OMB.

Type of Review: Extension of currently approved collections.

Title: Marine Terminals (29 CFR part 1917) and Longshoring (29 CFR part 1918).

OMB Number: 1218–0196.

Affected Public: Business or other for-profits; Not-for-profit organizations; Federal Government; State, Local, or Tribal Government.

Number of Respondents: 1,020.

Frequency of Response: On occasion.

Average Time per Response: Varies from one minute (.02 hour) to 1.08 hours.

Estimated Total Burden Hours: 47,398.

Estimated Cost (Operation and Maintenance): $0.

IV. Public Participation—Submission of Comments on This Notice and Internet Access to Comments and Submissions

You may submit comments in response to this document as follows: (1) Electronically at *http://www.regulations.gov,* which is the Federal eRulemaking Portal; (2) by facsimile (fax); or (3) by hard copy. All comments, attachments, and other material must identify the Agency name and the OSHA docket number for the ICR (Docket No. OSHA–2012–0016). You may supplement electronic submissions by uploading document files electronically. If you wish to mail additional materials in reference to an electronic or facsimile submission, you must submit them to the OSHA Docket Office (see the section of this notice titled **ADDRESSES**). The additional materials must clearly identify your electronic comments by your name, date, and the docket number so the Agency can attach them to your comments.

Because of security procedures, the use of regular mail may cause a significant delay in the receipt of comments. For information about security procedures concerning the delivery of materials by hand, express delivery, messenger, or courier service, please contact the OSHA Docket Office at (202) 693–2350, (TTY (877) 889–5627).

Comments and submissions are posted without change at *http://www.regulations.gov.* Therefore, OSHA cautions commenters about submitting personal information such as social security numbers and dates of birth. Although all submissions are listed in the *http://www.regulations.gov* index, some information (e.g., copyrighted material) is not publicly available to read or download through this Web site. All submissions, including copyrighted material, are available for inspection and copying at the OSHA Docket Office. Information on using the *http://www.regulations.gov* Web site to submit comments and access the docket is available at the Web site's ''User Tips'' link. Contact the OSHA Docket Office for information about materials not available through the Web site, and for assistance in using the Internet to locate docket submissions.

V. Authority and Signature

David Michaels, Ph.D., MPH, Assistant Secretary of Labor for Occupational Safety and Health, directed the preparation of this notice. The authority for this notice is the Paperwork Reduction Act of 1995 (44 U.S.C. 3506 *et seq.*) and Secretary of Labor's Order No. 1–2012 (77 FR 3912).

Signed at Washington, DC, on April 20, 2012.

David Michaels,

Assistant Secretary of Labor for Occupational Safety and Health.

[FR Doc. 2012–10030 Filed 4–25–12; 8:45 am]

BILLING CODE 4510–26–P

DEPARTMENT OF LABOR

Occupational Safety and Health Administration

[Docket No. OSHA–2011–0861]

OSHA Strategic Partnership Program for Worker Safety and Health (OSPP); Extension of the Office of Management and Budget's (OMB) Approval of Information Collection (Paperwork) Requirements

AGENCY: Occupational Safety and Health Administration (OSHA), Labor.

ACTION: Request for public comments.

SUMMARY: OSHA solicits public comments concerning its proposal to extend OMB approval of the information collection requirements specified in the OSHAs Strategic Partnership Program for Worker Safety and Health (OSPP).

DATES: Comments must be submitted (postmarked, sent, or received) by June 25, 2012.

ADDRESSES: *Electronically:* You may submit comments and attachments electronically at *http://www.regulations.gov,* which is the Federal eRulemaking Portal. Follow the instructions online for submitting comments.

Facsimile: If your comments, including attachments, are not longer than 10 pages, you may fax them to the OSHA Docket Office at (202) 693–1648.

Mail, hand delivery, express mail, messenger, or courier service: When using this method, you must submit your comments and attachments to the OSHA Docket Office, Docket No. OSHA–2011–0861, Occupational Safety and Health Administration, U.S. Department of Labor, Room N–2625, 200 Constitution Avenue NW., Washington, DC 20210. Deliveries (hand, express mail, messenger, and courier service) are accepted during the Department of Labor's and Docket Office's normal business hours, 8:15 a.m. to 4:45 p.m., e.t.

Instructions: All submissions must include the Agency name and OSHA docket number (OSHA–2011–0861) for the Information Collection Request (ICR). All comments, including any personal information you provide, are placed in the public docket without change, and may be made available online at *http://www.regulations.gov.* For further information on submitting comments, see the ''Public Participation'' heading in the section of this notice titled **SUPPLEMENTARY INFORMATION.**

Docket: To read or download comments or other material in the docket, go to *http://www.regulations.gov* or the OSHA Docket Office at the address above. All documents in the docket (including this **Federal Register** notice) are listed in the *http://www.regulations.gov* index; however, some information (e.g., copyrighted material) is not publicly available to read or download from the Web site. All submissions, including copyrighted material, are available for inspection and copying at the OSHA Docket Office. You may also contact Theda Kenney at the address below to obtain a copy of the ICR.

FOR FURTHER INFORMATION CONTACT: Theda Kenney or Todd Owen, Directorate of Standards and Guidance, OSHA, U.S. Department of Labor, Room N–3609, 200 Constitution Avenue NW., Washington, DC 20210; telephone (202) 693–2222.

SUPPLEMENTARY INFORMATION:

I. Background

The Department of Labor, as part of its continuing effort to reduce paperwork and respondent (i.e., employer) burden, conducts a preclearance consultation program to provide the public with an opportunity to comment on proposed and continuing information collection requirements in accord with the Paperwork Reduction Act of 1995 (PRA–95) (44 U.S.C. 3506(c)(2)(A)). This program ensures that information is in the desired format, reporting burden (time and costs) is minimal, collection instruments are clearly understood, and OSHA's estimate of the information collection burden is accurate. The Occupational Safety and Health Act of the 1970 (the OSH Act) authorizes information collection by employers as necessary or appropriate for enforcement of the OSH Act or for developing information regarding the causes and prevention of occupational injuries, illnesses, and accidents (29 U.S.C. 657). The OSHA Act also requires that OSHA obtain such information with minimum burden upon employers, especially those operating small businesses, and to reduce to the maximum extent feasible unnecessary duplication of efforts in obtaining information (29 U.S.C. 657).

The OSHA Strategic Partnership Program (OSPP) allows OSHA to enter into an extended, voluntary, cooperative relationship with groups of employers, workers, and representatives (sometimes including other stakeholders, and sometimes involving only one employer) to encourage, assist and recognize their efforts to eliminate serious hazards and achieve a high level of worker safety and health that goes beyond what historically has been achieved through traditional enforcement methods. Each OSHA Strategic Partnership (OSP) determines which information will be needed, determining the best collection method, and clarifying how the information will be used. At a minimum, each OSP must identify baseline illness and injury data corresponding to all summary line items on the OSHA 200/300 logs, and must track changes at either the worksite level or participant-aggregate level. An OSP may also include other measures of success, such as training activity, self inspections, and/or workers' compensation data.

In this regard, the information collection requirements for the OSPP are used by the Agency to gauge the effectiveness of its programs, identify needed improvements, and ensure that its resources are being used for good and effective purposes.

II. Special Issues for Comment

OSHA has a particular interest in comments on the following issues:

- Whether the proposed information collection requirements are necessary for the proper performance of the Agency's function to protect workers, including whether the information is useful;
- The accuracy of OSHA's estimate of the burden (time and costs) of the information collection requirements, including the validity of the methodology and assumptions used;
- The quality, utility, and clarity of the information collected; and
- Ways to minimize the burden on employees who must comply; for example, by using automated or other technological information collection and transmission techniques.

III. Proposed Actions

The Agency is requesting that OMB extend the approval of the collection of

information (paperwork) requirements outlined by OSHA's Strategic Partnership Program. In addition, the Agency proposes to use a blanket approval, eliminating the need for the Agency to submit the collection of information requirements for each individual partnership to OMB for approval. The Agency also proposes to decrease the existing burden hour estimate from 361,416 to 108,702 as a result of a decrease in the number of partnerships. OSHA will summarize the comments submitted in response to this notice, and will include this summary in its request to OMB to extend the approval of the collection of information requirements.

Type of Review: Extension of a currently approved collection.

Title: OSHA Strategic Partnership Program for Worker Safety and Health (OSPP).

OMB Control Number: 1218–0244.

Affected Public: Business or other for-profits.

Frequency: On occasion.

Total Responses: 18,144.

Average Time per Response: Eleven (11) hours to develop the partnership requirements, craft agreement language, and conduct an internal review process.

Estimated Total Burden Hours: 108,702.

Estimated Cost (Operation and Maintenance): $0.

IV. Public Participation—Submission of Comments on This Notice and Internet Access to Comments and Submissions

You may submit comments in response to this document as follows: (1) Electronically at *http://www.regulations.gov,* which is the Federal eRulemaking Portal; (2) by facsimile (fax); or (3) by hard copy. All comments, attachments, and other material must identify the Agency name and the OSHA docket number for this ICR (Docket No. OSHA–2011–0861). You may supplement electronic submissions by uploading document files electronically. If you wish to mail additional materials in reference to an electronic or a facsimile submission, you must submit them to the OSHA Docket Office (see the section of this notice titled **ADDRESSES**). The additional materials must clearly identify your electronic comments by your name, date, and the docket number so the Agency can attach them to your comments.

Because of security procedures, the use of regular mail may cause a significant delay in the receipt of comments. For information about security procedures concerning the delivery of materials by hand, express delivery, messenger or courier service, please contact the OSHA Docket Office at (202) 693–2350, (TTY (877) 889–5627).

Comments and submissions are posted without change at *http://www.regulations.gov.* Therefore, OSHA cautions commenters about submitting personal information, such as social security numbers and dates of birth. Although all submissions are listed in the *http://www.regulations.gov* index, some information (e.g., copyrighted material) is not publicly available to read or download through this Web site. All submissions, including copyrighted material, are available for inspection and copying at the OSHA Docket Office. Information on using the *http://www.regulations.gov* Web site to submit comments and access the docket is available at the Web site's ''User Tips'' link. Contact the OSHA Docket Office for information about materials not available through the Web site and for assistance in using the Internet to locate docket submissions.

V. Authority and Signature

David Michaels, Ph.D., MPH, Assistant Secretary of Labor for Occupational Safety and Health, directed the preparation of this notice. The authority for this notice is the Paperwork Reduction Act of 1995 (44 U.S.C. 3506 *et seq.*) and Secretary of Labor's Order No. 1–2012 (77 FR 3912).

Signed at Washington, DC, on April 20, 2012.

David Michaels,

Assistant Secretary of Labor for Occupational Safety and Health.

[FR Doc. 2012–10056 Filed 4–25–12; 8:45 am]

BILLING CODE 4510–26–P

NUCLEAR REGULATORY COMMISSION

[Docket No. 40–8452; NRC–2012–0095]

License Amendment Request To Amend Source Materials License SUA–1310 and Proceed With Termination of the License and Transfer of the Site to the U.S. Department of Energy; Anadarko Petroleum Corporation, Bear Creek Uranium Mill, Converse County, WY

AGENCY: Nuclear Regulatory Commission.

ACTION: License amendment request, opportunity to comment, request a hearing and petition for leave to intervene.

DATES: Comments must be filed by May 29, 2012. A request for a hearing must be filed by June 25, 2012.

ADDRESSES: You may access information and comment submissions related to this document, which the NRC possesses and is publicly-available, by searching on *http://www.regulations.gov* under Docket ID NRC–2012–0095.

You may submit comments by the following methods:

- *Federal Rulemaking Web site:* Go to *http://www.regulations.gov* and search for Docket ID NRC–2012–0095. Address questions about NRC dockets to Carol Gallagher; telephone: 301–492–3668; email: *Carol.Gallagher@nrc.gov.*
- *Mail comments to:* Cindy Bladey, Chief, Rules, Announcements, and Directives Branch (RADB), Office of Administration, Mail Stop: TWB–05–B01M, U.S. Nuclear Regulatory Commission, Washington, DC 20555–0001.
- *Fax comments to:* RADB at 301–492–3446.

For additional direction on accessing information and submitting comments, see ''Accessing Information and Submitting Comments'' in the **SUPPLEMENTARY INFORMATION** section of this document.

FOR FURTHER INFORMATION CONTACT: Thomas McLaughlin, Office of Federal and State Materials and Environmental Management Programs, U.S. Nuclear Regulatory Commission, Washington, DC 20555; telephone: 301–415–5869; email: *Thomas.McLaughlin@nrc.gov.*

SUPPLEMENTARY INFORMATION:

I. Accessing Information and Submitting Comments

A. Accessing Information

Please refer to Docket ID NRC–2012–0095 when contacting the NRC about the availability of information regarding this document. You may access information related to this document, which the NRC possesses and is publicly-available, by the following methods:

- *Federal Rulemaking Web Site:* Go to *http://www.regulations.gov* and search for Docket ID NRC–2012–0095.
- *NRC's Agencywide Documents Access and Management System (ADAMS):* You may access publicly-available documents online in the NRC Library at *http://www.nrc.gov/reading-rm/adams.html.* To begin the search, select ''ADAMS Public Documents'' and then select ''Begin Web-based ADAMS Search.'' For problems with ADAMS, please contact the NRC's Public Document Room (PDR) reference staff at 1–800–397–4209, 301–415–4737, or by email to *pdr.resource@nrc.gov.* The Bear

Creek Uranium Alternate Concentration Proposal is available electronically under ADAMS Accession Number ML120470103.

• *NRC's PDR:* You may examine and purchase copies of public documents at the NRC's PDR, Room O1–F21, One White Flint North, 11555 Rockville Pike, Rockville, Maryland 20852.

B. Submitting Comments

Please include Docket ID NRC–2012–0095 in the subject line of your comment submission, in order to ensure that the NRC is able to make your comment submission available to the public in this docket.

The NRC cautions you not to include identifying or contact information in comment submissions that you do not want to be publicly disclosed. The NRC posts all comment submissions at *http://www.regulations.gov* as well as entering the comment submissions into ADAMS, and the NRC does not edit comment submissions to remove identifying or contact information.

If you are requesting or aggregating comments from other persons for submission to the NRC, then you should inform those persons not to include identifying or contact information in their comment submissions that they do not want to be publicly disclosed. Your request should state that the NRC will not edit comment submissions to remove such information before making the comment submissions available to the public or entering the comment submissions into ADAMS.

II. Introduction

The Nuclear Regulatory Commission (NRC or the Commission) has received, by letter dated November 28, 2011, a license amendment application from Anadarko Petroleum Corporation (Licensee) for their Bear Creek Uranium site located in Converse County, Wyoming, requesting to amend their existing alternate concentration limits, to delete License Condition 47, and to proceed with termination of the license and transfer of the facility to the U.S. Department of Energy. License No. SUA–1310 authorizes the Licensee to possess byproduct material resulting from past operations of its Bear Creek facility until site reclamation is adequate. The proposed changes in the existing alternate concentration limits are to extend the Point of Exposure wells to those wells at the northern property boundary. The elimination of License Condition 47 would mean that the Licensee would no longer be required to sample its wells and report the results to the NRC.

An NRC administrative review, documented in a letter to Anadarko Petroleum Corporation dated January 12, 2012 (ADAMS Accession No. ML120100298), found the application acceptable to begin a technical review. If the NRC approves the amendment, the approval will be documented in an amendment to NRC License No. SUA–1310. However, before approving the proposed amendment, the NRC will need to make the findings required by the Atomic Energy Act of 1954, as amended, and the NRC's regulations. These findings will be documented in a Safety Evaluation Report and an Environmental Assessment.

III. Opportunity To Request a Hearing; Petitions for Leave To Intervene

Within 60 days after the date of publication of this **Federal Register** notice, any person whose interest may be affected by this proceeding and who wishes to participate as a party in the proceeding must file a written request for a hearing and a petition for leave to intervene with respect to the license amendment request. Requirements for hearing requests and petitions for leave to intervene are found in Title 10 of the Code of Federal Regulations (10 CFR) 2.309, ''Hearing requests, Petitions to Intervene, Requirements for Standing, and Contentions.'' Interested persons should consult 10 CFR 2.309, which is available at the NRC's Public Document Room (PDR), Room O1–F21, One White Flint North, 11555 Rockville Pike, Rockville, MD 20852 (or call the PDR at 1–800–397–4209 or 301–415–4737). The NRC's regulations are available online in the NRC Library at *http://www.nrc.gov/reading-rm/adams.html.*

Any person whose interest may be affected by this proceeding and who wishes to participate as a party in the proceeding must file a written petition for leave to intervene. As required by 10 CFR 2.309, a petition for leave to intervene shall set forth with particularity the interest of the petitioner in the proceeding and how that interest may be affected by the results of the proceeding. The petition must provide the name, address, and telephone number of the petitioner and specifically explain the reasons why intervention should be permitted with particular reference to the following factors: (1) The nature of the petitioner's right under the Act to be made a party to the proceeding; (2) the nature and extent of the petitioner's property, financial, or other interest in the proceeding; and (3) the possible effect of any order that may be entered in the proceeding on the petitioner's interest.

A petition for leave to intervene must also include a specification of the contentions that the petitioner seeks to have litigated in the hearing. For each contention, the petitioner must provide a specific statement of the issue of law or fact to be raised or controverted, as well as a brief explanation of the basis for the contention. Additionally, the petitioner must demonstrate that the issue raised by each contention is within the scope of the proceeding and is material to the findings the NRC must make to support the granting of a license amendment in response to the application. The petition must also include a concise statement of the alleged facts or expert opinions which support the position of the petitioner and on which the petitioner intends to rely at hearing, together with references to the specific sources and documents on which the petitioner intends to rely. Finally, the petition must provide sufficient information to show that a genuine dispute exists with the applicant on a material issue of law or fact, including references to specific portions of the application for amendment that the petitioner disputes and the supporting reasons for each dispute, or, if the petitioner believes that the application for amendment fails to contain information on a relevant matter as required by law, the identification of each failure and the supporting reasons for the petitioner's belief. Each contention must be one that, if proven, would entitle the petitioner to relief.

Those permitted to intervene become parties to the proceeding, subject to any limitations in the order granting leave to intervene, and have the opportunity to participate fully in the conduct of the hearing with respect to resolution of that person's admitted contentions, including the opportunity to present evidence and to submit a cross-examination plan for cross-examination of witnesses, consistent with the NRC regulations, policies, and procedures. The Atomic Safety and Licensing Board will set the time and place for any prehearing conferences and evidentiary hearings, and the appropriate notices will be provided.

Non-timely petitions for leave to intervene and contentions, amended petitions, and supplemental petitions will not be entertained absent a determination by the Commission, the Atomic Safety and Licensing Board or a Presiding Officer that the petition should be granted and/or the contentions should be admitted based upon a balancing of the factors specified in 10 CFR 2.309(c)(1)(i)–(viii).

A State, county, municipality, Federally-recognized Indian tribe, or agencies thereof, may submit a petition to the Commission to participate as a party under 10 CFR 2.309(d)(2). The petition should state the nature and extent of the petitioner's interest in the proceeding. The petition should be submitted to the Commission by June 25, 2012. The petition must be filed in accordance with the filing instructions in Section IV of this document, and should meet the requirements for petitions for leave to intervene set forth in this section, except that State and Federally-recognized Indian tribes do not need to address the standing requirements in 10 CFR 2.309(d)(1) if the facility is located within its boundaries. The entities listed above could also seek to participate in a hearing as a nonparty pursuant to 10 CFR 2.315(c).

Any person who does not wish, or is not qualified, to become a party to this proceeding may request permission to make a limited appearance pursuant to the provisions of 10 CFR 2.315(a). A person making a limited appearance may make an oral or written statement of position on the issues, but may not otherwise participate in the proceeding. A limited appearance may be made at any session of the hearing or at any prehearing conference, subject to such limits and conditions as may be imposed by the Atomic Safety and Licensing Board. Persons desiring to make a limited appearance are requested to inform the Secretary of the Commission by June 25, 2012.

IV. Electronic Submissions (E-Filing)

All documents filed in NRC adjudicatory proceedings, including a request for hearing, a petition for leave to intervene, any motion or other document filed in the proceeding prior to the submission of a request for hearing or petition to intervene, and documents filed by interested governmental entities participating under 10 CFR 2.315(c), must be filed in accordance with the NRC E-Filing rule (72 FR 49139, August 28, 2007). The E-Filing process requires participants to submit and serve all adjudicatory documents over the Internet, or in some cases to mail copies on electronic storage media. Participants may not submit paper copies of their filings unless they seek an exemption in accordance with the procedures described below.

To comply with the procedural requirements of E-Filing, at least 10 days prior to the filing deadline, the participant should contact the Office of the Secretary by email at *hearing.docket@nrc.gov,* or by telephone at 301–415–1677, to request (1) a digital identification (ID) certificate, which allows the participant (or its counsel or representative) to digitally sign documents and access the E-Submittal server for any proceeding in which it is participating; and (2) advise the Secretary that the participant will be submitting a request or petition for hearing (even in instances in which the participant, or its counsel or representative, already holds an NRC-issued digital ID certificate). Based upon this information, the Secretary will establish an electronic docket for the hearing in this proceeding if the Secretary has not already established an electronic docket.

Information about applying for a digital ID certificate is available on the NRC's public Web site at *http://www.nrc.gov/site-help/e-submittals/apply-certificates.html.* System requirements for accessing the E-Submittal server are detailed in the NRC's ''Guidance for Electronic Submission,'' which is available on the agency's public Web site at *http://www.nrc.gov/site-help/e-submittals.html.* Participants may attempt to use other software not listed on the Web site, but should note that the NRC's E-Filing system does not support unlisted software, and the NRC Meta System Help Desk will not be able to offer assistance in using unlisted software.

If a participant is electronically submitting a document to the NRC in accordance with the E-Filing rule, the participant must file the document using the NRC's online, Web-based submission form. In order to serve documents through the Electronic Information Exchange System, users will be required to install a Web browser plug-in from the NRC's Web site. Further information on the Web-based submission form, including the installation of the Web browser plug-in, is available on the NRC's public Web site at *http://www.nrc.gov/site-help/e-submittals.html.*

Once a participant has obtained a digital ID certificate and a docket has been created, the participant can then submit a request for hearing or petition for leave to intervene. Submissions should be in Portable Document Format (PDF) in accordance with the NRC guidance available on the NRC's public Web site at *http://www.nrc.gov/site-help/e-submittals.html.* A filing is considered complete at the time the documents are submitted through the NRC's E-Filing system. To be timely, an electronic filing must be submitted to the E-Filing system no later than 11:59 p.m. Eastern Time on the due date. Upon receipt of a transmission, the E-Filing system time-stamps the document and sends the submitter an email notice confirming receipt of the document. The E-Filing system also distributes an email notice that provides access to the document to the NRC's Office of the General Counsel and any others who have advised the Office of the Secretary that they wish to participate in the proceeding, so that the filer need not serve the documents on those participants separately. Therefore, applicants and other participants (or their counsel or representative) must apply for and receive a digital ID certificate before a hearing request/petition to intervene is filed so that they can obtain access to the document via the E-Filing system.

A person filing electronically using the agency's adjudicatory E-Filing system may seek assistance by contacting the NRC Meta System Help Desk through the ''Contact Us'' link located on the NRC's Web site at *http://www.nrc.gov/site-help/e-submittals.html,* by email at *MSHD.Resource@nrc.gov,* or by a toll-free call at 1–866–672–7640. The NRC Meta System Help Desk is available between 8 a.m. and 8 p.m., Eastern Time, Monday through Friday, excluding government holidays.

Participants who believe that they have a good cause for not submitting documents electronically must file an exemption request, in accordance with 10 CFR 2.302(g), with their initial paper filing requesting authorization to continue to submit documents in paper format. Such filings must be submitted by: (1) First class mail addressed to the Office of the Secretary of the Commission, U.S. Nuclear Regulatory Commission, Washington, DC 20555–0001, Attention: Rulemaking and Adjudications Staff; or (2) courier, express mail, or expedited delivery service to the Office of the Secretary, Sixteenth Floor, One White Flint North, 11555 Rockville Pike, Rockville, Maryland, 20852, Attention: Rulemaking and Adjudications Staff. Participants filing a document in this manner are responsible for serving the document on all other participants. Filing is considered complete by first-class mail as of the time of deposit in the mail, or by courier, express mail, or expedited delivery service upon depositing the document with the provider of the service. A presiding officer, having granted an exemption request from using E-Filing, may require a participant or party to use E-Filing if the presiding officer subsequently determines that the reason for granting

the exemption from use of E-Filing no longer exists.

Documents submitted in adjudicatory proceedings will appear in the NRC's electronic hearing docket which is available to the public at *http://ehd1.nrc.gov/ehd/,* unless excluded pursuant to an order of the Commission, or the presiding officer. Participants are requested not to include personal privacy information, such as social security numbers, home addresses, or home phone numbers in their filings, unless an NRC regulation or other law requires submission of such information. With respect to copyrighted works, except for limited excerpts that serve the purpose of the adjudicatory filings and would constitute a Fair Use application, participants are requested not to include copyrighted materials in their submission.

Petitions for leave to intervene must be filed no later than 60 days from April 26, 2012. Non-timely filings will not be entertained absent a determination by the presiding officer that the petition or request should be granted or the contentions should be admitted, based on a balancing of the factors specified in 10 CFR 2.309(c)(1)(i)–(viii).

Dated at Rockville, Maryland, this 17th day of April, 2012.

For the Nuclear Regulatory Commission.

Keith McConnell,

Deputy Director, Decommissioning and Uranium Recovery Licensing Directorate, Division of Waste Management and Environmental Protection, Office of Federal and State Materials and Environmental Management Programs.

[FR Doc. 2012–10065 Filed 4–25–12; 8:45 am]

BILLING CODE 7590–01–P

POSTAL REGULATORY COMMISSION

[Docket Nos. MC2012–11 and CP2012–19; Order No. 1321]

New Postal Product

AGENCY: Postal Regulatory Commission.

ACTION: Notice.

SUMMARY: The Commission is noticing a recently-filed Postal Service request to add First-Class Package Service Contract 1 to the competitive product list. This notice addresses procedural steps associated with the filing.

DATES: *Comments are due:* May 4, 2012.

ADDRESSES: Submit comments electronically by accessing the ''Filing Online'' link in the banner at the top of the Commission's Web site (*http://www.prc.gov*) or by directly accessing the Commission's Filing Online system at *https://www.prc.gov/prc-pages/filing-online/login.aspx.* Commenters who cannot submit their views electronically should contact the person identified in the **FOR FURTHER INFORMATION CONTACT** section as the source for case-related information for advice on alternatives to electronic filing.

FOR FURTHER INFORMATION CONTACT: Stephen L. Sharfman, General Counsel, at 202–789–6820 (case-related information) or *DocketAdmins@prc.gov* (electronic filing assistance).

SUPPLEMENTARY INFORMATION:

I. Introduction
II. Notice of Filings
III. Ordering Paragraphs

I. Introduction

In accordance with 39 U.S.C. 3642 and 39 CFR 3020.30 *et seq.,* the Postal Service filed a formal request and associated supporting information to add First-Class Package Service Contract 1 to the Competitive Product List.[1] The Postal Service asserts that First-Class Package Service Contract 1 is ''a competitive product not of general applicability within the meaning of 39 U.S.C. § 3632(b)(3).'' *Id.* at 1. The Request has been assigned Docket No. MC2012–11.

The Postal Service contemporaneously filed a redacted contract related to the proposed new product. *Id.,* Attachment B. The instant contract has been assigned Docket No. CP2012–19.

Request. To support its Request, the Postal Service filed the following six attachments:

- Attachment A—a redacted version of the Governors' Decision and accompanying analysis. An explanation and justification is provided in the Governors' Decision and analysis filed in the unredacted version under seal;
- Attachment B—a redacted version of the instant contract;
- Attachment C—the proposed changes in the Mail Classification Schedule with the addition underlined;
- Attachment D—a Statement of Supporting Justification as required by 39 CFR 3020.32;
- Attachment E—a certification of compliance with 39 U.S.C. 3633(a)(1), (2), and (3); and
- Attachment F—an Application for Non-public Treatment of the materials filed under seal. The materials filed under seal are the unredacted version of the instant contract and the required cost and revenue data.

In the Statement of Supporting Justification, Dennis R. Nicoski, Manager, Field Sales Strategy and Contracts, asserts that the instant contract will cover its attributable costs, make a positive contribution to cover institutional costs, and increase contribution toward the requisite 5.5 percent of the Postal Service's institutional costs. *Id.,* Attachment D at 1. Mr. Nicoski contends that there will be no issue of subsidization of market dominant products by competitive products as a result of the instant contract. *Id.*

Instant contract. The Postal Service included a redacted version of the instant contract with the Request. *Id.,* Attachment B. It is scheduled to become effective on the day the Commission issues all necessary regulatory approval (Effective Date). *Id.* at 2. It will expire 2 years from the Effective Date unless, among other things, either party terminates the agreement with 30 days written notice to the other party. *Id.* at 2–3. The Postal Service represents that the related contract is consistent with 39 U.S.C. 3633. *Id.,* Attachment D.

The Postal Service filed much of the supporting materials, including the unredacted version of the instant contract, under seal. *Id.,* Attachment F. It maintains that the unredacted Governors' Decision, the unredacted version of the instant contract, and supporting documents establishing compliance with 39 U.S.C. 3633 and 39 CFR 3015.5 should remain confidential. *Id.* at 1. The Postal Service asks the Commission to protect customer-identifying information from public disclosure indefinitely. *Id.*

II. Notice of Filings

The Commission establishes Docket Nos. MC2012–11 and CP2012–19 to consider the Request and the instant contract, respectively.

Interested persons may submit comments on whether the Postal Service's filings in these dockets are consistent with the policies of 39 U.S.C. 3632, 3633, or 3642, 39 CFR 3015.5, and 39 CFR part 3020, subpart B. Comments are due no later than May 4, 2012. The public portions of these filings can be accessed via the Commission's Web site (*http://www.prc.gov*).

The Commission appoints Katalin K. Clendenin to serve as Public Representative in these dockets.

III. Ordering Paragraphs

It is ordered:

1. The Commission establishes Docket Nos. MC2012–11 and CP2012–19 to

[1] Request of the United States Postal Service to Add First-Class Package Service Contract 1 to Competitive Product List and Notice of Filing (Under Seal) of Unredacted Governors' Decision, Contract, and Supporting Data, April 17, 2012 (Request).

consider the matters raised in each docket.

2. Pursuant to 39 U.S.C. 505, Katalin K. Clendenin is appointed to serve as officer of the Commission (Public Representative) to represent the interests of the general public in these proceedings.

3. Comments by interested persons in these proceedings are due no later than May 4, 2012.

4. The Secretary shall arrange for publication of this order in the **Federal Register**.

By the Commission.

Shoshana M. Grove,

Secretary.

[FR Doc. 2012–10023 Filed 4–25–12; 8:45 am]

BILLING CODE 7710–FW–P

SECURITIES AND EXCHANGE COMMISSION

[Release No. 34–66838; File No. SR–Phlx–2012–50]

Self-Regulatory Organizations; NASDAQ OMX PHLX LLC; Notice of Filing and Immediate Effectiveness of Proposed Rule Change Relating to Routing Fees

April 20, 2012.

Pursuant to Section 19(b)(1) of the Securities Exchange Act of 1934 (''Act'') [1], and Rule 19b–4 thereunder,[2] notice is hereby given that on April 11, 2012, NASDAQ OMX PHLX LLC (''Phlx'' or ''Exchange'') filed with the Securities and Exchange Commission (''SEC'' or ''Commission'') the proposed rule change as described in Items I, II, and III below, which Items have been prepared by the Exchange. The Commission is publishing this notice to solicit comments on the proposed rule change from interested persons.

I. Self-Regulatory Organization's Statement of the Terms of Substance of the Proposed Rule Change

The Exchange proposes to amend certain Routing Fees to recoup costs incurred by the Exchange in routing to BATS Exchange, Inc. (''BATS'').

The Exchange intends for these amendments to be effective upon filing, except with respect to the amendments related to the Firm/Broker-Dealer/Market Maker category, which Routing Fees will be operative on April 27, 2012 when SR–Phlx–2012–41 becomes operative.[3]

The text of the proposed rule change is available on the Exchange's Web site at *http://nasdaqtrader.com/micro.aspx?id=PHLXfilings,* at the principal office of the Exchange, and at the Commission's Public Reference Room.

II. Self-Regulatory Organization's Statement of the Purpose of, and Statutory Basis for, the Proposed Rule Change

In its filing with the Commission, the Exchange included statements concerning the purpose of and basis for the proposed rule change and discussed any comments it received on the proposed rule change. The text of these statements may be examined at the places specified in Item IV below. The Exchange has prepared summaries, set forth in sections A, B, and C below, of the most significant aspects of such statements.

A. Self-Regulatory Organization's Statement of the Purpose of, and the Statutory Basis for, the Proposed Rule Change

1. Purpose

The purpose of this filing is to recoup costs that the Exchange incurs for routing and executing certain orders in equity and index options to BATS. The Exchange's Pricing Schedule at Section V currently includes the following Routing Fees for routing Customer, Professional, Firm, Broker-Dealer and Market Maker orders to away markets.[4]

Exchange	Customer	Professional	Firm/broker-dealer/market maker
NYSE AMEX	$0.11	$0.31	$0.55
BATS	0.55	0.55	0.55
BOX	0.11	0.11	0.55
CBOE	0.11	0.31	0.55
CBOE orders greater than 99 contracts in RUT, RMN, NDX, MNX, ETFs, ETNs and HOLDRs	0.29	0.31	0.55
C2	0.55	0.56	0.55
ISE	0.11	0.29	0.55
ISE Select Symbols*	0.31	0.39	0.55
NYSE ARCA (Penny Pilot)	0.55	0.55	0.55
NYSE ARCA (Standard)	0.11	0.11	0.55
NOM	0.54	0.54	0.55
NOM (NDX and MNX)	0.56	0.56	0.55

* These fees are applicable to orders routed to ISE that are subject to Rebates and Fees for Adding and Removing Liquidity in Select Symbols. See ISE's Schedule of Fees for the complete list of symbols that are subject to these fees.

The Exchange is proposing to amend the current BATS Routing Fees by renaming those fees as ''BATS Penny.'' [5] The Exchange is not proposing to amend the current rate of $0.55 per contract for Customers, Professionals, Firms, Broker-Dealers, and Market Makers, but proposes to apply those fees solely to Penny options routed to BATS.

The Exchange proposes to create new Routing Fees to BATS for non-Penny options. BATS recently adopted a $0.75 per contract non-Penny fee for customers that remove liquidity from the BATS Options order book and a $0.80 per contract non-Penny fee for professionals, firms and market makers that remove liquidity from the BATS Options order book.[6] The Exchange is proposing to adopt BATS non-Penny Routing Fees to account for the new

[1] 15 U.S.C. 78s(b)(1).

[2] 17 CFR 240.19b–4.

[3] *See* Securities and Exchange Act Release No. 66754 (April 6, 2012) (SR–Phlx–2012–41) which filing is immediately effective and will become operative on April 27, 2012.

[4] The Exchange recently amended its Pricing Schedule to adopt a ''Firm/Broker-Dealer/Market Maker'' Routing Fee category. *See* Securities and Exchange Act Release No. 66755 (April 6, 2012) (SR–Phlx–2012–42). The pricing change was filed for immediate effectiveness with an operative date of April 27, 2012.

[5] BATS defines Penny options as those issues that are quoted pursuant to BATS Rule 21.5, Interpretation and Policy .01.

[6] *See* SR–BATS–2012–015.

BATS fees for removing liquidity and other routing costs incurred by the Exchange when routing to BATS, as follows:

Exchange	Customer	Professional	Firm/broker-dealer/market maker
BATS non-Penny	$0.86	$0.91	$0.91

In May 2009, the Exchange adopted Rule 1080(m)(iii)(A) to establish Nasdaq Options Services LLC (''NOS''), a member of the Exchange, as the Exchange's exclusive order router.[7] NOS is utilized by the Exchange's fully automated options trading system, PHLX XL®,[8] solely to route orders in options listed and open for trading on the PHLX XL system to destination markets. Each time NOS routes to away markets NOS is charged a $0.06 clearing fee and, in the case of certain exchanges, a transaction fee is also charged in certain symbols, which fees are passed through to the Exchange. The Exchange currently recoups clearing and transaction charges incurred by the Exchange as well as certain other costs incurred by the Exchange when routing to away markets, such as administrative and technical costs associated with operating NOS, membership fees at away markets, and technical costs associated with routing.[9]

The Exchange intends for these amendments to be effective upon filing, except with respect to the amendments related to the Firm/Broker-Dealer/Market Maker category, which Routing Fees will be operative on April 27, 2012 when SR–Phlx–2012–41 becomes operative.[10]

As with all fees, the Exchange may adjust these Routing Fees in response to competitive conditions by filing a new proposed rule change.

2. Statutory Basis

The Exchange believes that its proposal to amend its Pricing Schedule is consistent with Section 6(b) of the Act[11] in general, and furthers the objectives of Section 6(b)(4) of the Act[12] in particular, in that it is an equitable allocation of reasonable fees and other charges among Exchange members.

The Exchange believes that the proposed amendment to the current BATS Routing Fees to rename those fees as ''BATS Penny'' and apply those fees to Penny options routed to BATS and adopt separate Routing Fees for non-Penny options routed to BATS is reasonable because the two separate categories take into account the different fees for removing liquidity assessed by BATS for non-Penny versus Penny options. The Exchange seeks to recoup costs incurred when routing orders to BATS on behalf of its members.

The Exchange believes that the proposed amendment to the current BATS Routing Fees to rename those fees as ''BATS Penny'' and apply those fees to Penny options routed to BATS and adopt separate Routing Fees for non-Penny options routed to BATS is equitable and not unfairly discriminatory because the Exchange will uniformly apply the BATS Penny as well as BATS non-Penny Routing Fees to its members based on the type of options orders routed to BATS.[13]

The proposed BATS non-Penny Routing Fees are reasonable because they seek to recoup costs that are incurred by the Exchange when routing Customer, Professional, Firm, Broker-Dealer and Market Maker orders to BATS on behalf of members. Each destination market's transaction charge varies and there is a standard clearing charge for each transaction incurred by the Exchange along with other administrative and technical costs that are incurred by the Exchange. The Exchange believes that the proposed Routing Fees would enable the Exchange to recover the remove fees assessed by BATS for non-Penny options, plus clearing and other administrative and technical fees for the execution of such orders when routed to BATS. The Exchange also believes that the proposed BATS non-Penny Routing Fees are equitable and not unfairly discriminatory because they would be uniformly applied to all non-Penny orders that are routed to BATS.

With respect to the Firm/Broker-Dealer/Market Maker category, the Exchange recently adopted those fees and proposed to assess a fixed Routing Fee of $0.55 per contract applicable to all away markets.[14] The Exchange noted in that rule change that pricing on the various options exchanges varies significantly from exchange to exchange for non-Customer orders. Accordingly, the Exchange proposed a $0.55 per contract side Routing Fee in order to capture the majority of the transaction and clearing fees for Firm, Broker-Dealer and Market Maker orders, while making the Exchange's Routing Fees easier to calculate and predict for members whose proprietary orders are routed away. In addition, fixed Routing Fees are easier to comprehend by the members whose orders are routed away. Further, predicting, calculating and charging back ''pass-through'' fees is an unduly burdensome, expensive and complicated task for members whose orders are routed away. The Exchange noted that fixed Routing Fees for Firm, Broker-Dealer and Market Maker orders should ease the burden, expense and complexity of this task. Furthermore, fixed fees are easier to manage and maintain for the Exchange, ensuring accurate billing and accounting. The Exchange believes its proposal to increase the BATS non-Penny Customer Routing Fee from $0.55 per contract to $0.86 per contract and the Professional, Firm, Broker-Dealer and Market Maker Routing Fees from $0.55 per contract to $0.91 per contract is reasonable because the fees proposed by BATS are not within the range of fees assessed by other exchanges since the recent

[7] *See* Securities Exchange Act Release No. 59995 (May 28, 2009), 74 FR 26750 (June 3, 2009) (SR–Phlx–2009–32).

[8] This proposal refers to ''PHLX XL'' as the Exchange's automated options trading system. In May 2009 the Exchange enhanced the system and adopted corresponding rules referring to the system as ''Phlx XL II.'' *See* Securities Exchange Act Release No. 59995 (May 28, 2009), 74 FR 26750 (June 3, 2009) (SR–Phlx–2009–32). The Exchange intends to submit a separate technical proposed rule change that would change all references to the system from ''Phlx XL II'' to ''PHLX XL'' for branding purposes.

[9] The Exchange is therefore adopting BATS non-Penny Routing Fees to account for the BATS fees of $0.75 per contract for customer orders and $0.80 per contract for professional, firm and market maker orders, the $0.06 clearing cost and another $0.05 per contract associated with administrative and technical costs associated with operating NOS.

[10] The Exchange recently filed a rule change to expand the routing capabilities of certain options orders that are eligible for electronic routing to other market centers by PHLX XL. *See* Securities and Exchange Act Release No. 66754 (April 6, 2012) (SR–Phlx–2012–41). Specifically, Exchange Rule 1080(m) was amended to permit Firm, Broker-Dealer and Market Maker orders to be eligible for routing to other market centers when the Exchange cannot execute such orders at the National Best Bid or Offer. SR–Phlx–2012–[sic]. The rule change is immediately effective and will be operative on April 27, 2012.

[11] 15 U.S.C. 78f(b).

[12] 15 U.S.C. 78f(b)(4).

[13] *See* note 5.

[14] *See* note 4.

increase in the BATS fee to removing liquidity from $0.44 per contract to $0.75 per contract for customer non-Penny options and from $0.44 per contract to $0.80 for professionals, firms and market makers. The Exchange believes it is reasonable to recoup the BATS remove fees plus the clearing and other costs to recoup Routing Fees.[15] The Exchange believes that the increase to the Firm/Broker-Dealer/Market Maker non-Penny BATS Routing Fees are equitable and not unfairly discriminatory because, as previously mentioned, those fees would be similarly calculated for Customers, Professionals, Firms, Broker-Dealers and Market Makers.[16] Additionally, the non-Penny BATS Routing Fees would be uniformly assessed for all non-Penny orders routed to BATS.

B. Self-Regulatory Organization's Statement on Burden on Competition

The Exchange does not believe that the proposed rule change will impose any burden on competition not necessary or appropriate in furtherance of the purposes of the Act.

C. Self-Regulatory Organization's Statement on Comments on the Proposed Rule Change Received From Members, Participants, or Others

No written comments were either solicited or received.

III. Date of Effectiveness of the Proposed Rule Change and Timing for Commission Action

The foregoing rule change has become effective pursuant to Section 19(b)(3)(A)(ii) of the Act.[17] At any time within 60 days of the filing of the proposed rule change, the Commission summarily may temporarily suspend such rule change if it appears to the Commission that such action is necessary or appropriate in the public interest, for the protection of investors, or otherwise in furtherance of the purposes of the Act. If the Commission takes such action, the Commission shall institute proceedings to determine whether the proposed rule should be approved or disapproved.

IV. Solicitation of Comments

Interested persons are invited to submit written data, views, and arguments concerning the foregoing, including whether the proposed rule change is consistent with the Act. Comments may be submitted by any of the following methods:

Electronic Comments

- Use the Commission's Internet comment form (*http://www.sec.gov/rules/sro.shtml*); or
- Send an email to *rule-comments@sec.gov.* Please include File No. SR–Phlx–2012–50 on the subject line.

Paper Comments

- Send paper comments in triplicate to Elizabeth M. Murphy, Secretary, Securities and Exchange Commission, 100 F Street NE., Washington, DC 20549–1090.

All submissions should refer to File No. SR–Phlx–2012–50. This file number should be included on the subject line if email is used. To help the Commission process and review your comments more efficiently, please use only one method. The Commission will post all comments on the Commission's Internet Web site (*http://www.sec.gov/rules/sro.shtml*). Copies of the submission, all subsequent amendments, all written statements with respect to the proposed rule change that are filed with the Commission, and all written communications relating to the proposed rule change between the Commission and any person, other than those that may be withheld from the public in accordance with the provisions of 5 U.S.C. 552, will be available for Web site viewing and printing in the Commission's Public Reference Room, 100 F Street NE., Washington, DC 20549, on official business days between the hours of 10 a.m. and 3 p.m. Copies of such filing also will be available for inspection and copying at the principal office of the Exchange. All comments received will be posted without change; the Commission does not edit personal identifying information from submissions. You should submit only information that you wish to make available publicly. All submissions should refer to File No. SR–Phlx–2012–50 and should be submitted on or before May 17, 2012.

For the Commission, by the Division of Trading and Markets, pursuant to delegated authority.[18]

Elizabeth M. Murphy,

Secretary.

[FR Doc. 2012–10025 Filed 4–25–12; 8:45 am]

BILLING CODE 8011–01–P

[15] *See* note 9.

[16] The Exchange's proposed non-Penny BATS Routing Fees are calculated similarly for all participants by adding the fee to remove liquidity assessed by BATS for the particular market participant plus a fee of $.11 per contract which represents clearing and other costs noted herein.

[17] 15 U.S.C. 78s(b)(3)(A)(ii).

[18] 17 CFR 200.30–3(a)(12).

SECURITIES AND EXCHANGE COMMISSION

[Release No. 34–66841; File No. SR–OCC–2012–06]

Self-Regulatory Organizations; The Options Clearing Corporation; Notice of Filing and Order Granting Accelerated Approval of Proposed Rule Change Relating to Revised DCO Rules

April 20, 2012.

Pursuant to Section 19(b)(1) of the Securities Exchange Act of 1934 (''Act'')[1] and Rule 19b–4 thereunder,[2] notice is hereby given that on April 10, 2012, The Options Clearing Corporation (''OCC'') filed with the Securities and Exchange Commission (''Commission'') the proposed rule change described in Items I and II below, which items have been prepared primarily by OCC. The Commission is publishing this Notice and Order to solicit comments on the proposed rule change from interested persons and to approve the proposed rule change on an accelerated basis.

I. Self-Regulatory Organization's Statement of Terms of Substance of the Proposed Rule Change

The proposed rule change would ensure compliance with final regulations of the Commodity Futures Trading Commission (''CFTC'') applicable to derivatives clearing organizations (''DCOs'') that become effective on May 7, 2012.

II. Self-Regulatory Organization's Statement of Purpose of, and Statutory Basis for, the Proposed Rule Change

In its filing with the Commission, OCC included statements concerning the purpose and basis for the proposed rule change and discussed any comments it received on the proposed rule change. The text of these statements may be examined at the places specified in Item III below. OCC has prepared summaries, set forth in sections A, B, and C below, of the most significant aspects of such statements.

A. Self-Regulatory Organization's Statement of Purpose of, and Statutory Basis for, the Proposed Rule Change

The purposes of the proposed changes to OCC's By-Laws and Rules are (a) to ensure compliance with certain regulations recently promulgated by the CFTC that become effective on May 7, 2012, and (b) to put in place a minor rule violation plan (''MRV Plan''), within the meaning of Exchange Act

[1] 15 U.S.C. 78s(b)(1).

[2] 17 CFR 240.19b–4.

Rule 19d–1(c)(2).[3] The CFTC's final regulations implement statutory ''core principles'' applicable to DCOs as those core principles were amended by the Dodd-Frank Act.

The Final DCO Regulations

On October 18, 2011, the CFTC held an open meeting at which it issued final regulations implementing many of the new statutory core principles for DCOs enacted under the Dodd-Frank Act. On December 20, 2011, OCC filed a rule change implementing changes designed to bring it into compliance with certain of these final regulations that went into effect on January 9, 2012. This rule filing was approved by the Commission on an accelerated basis on January 3, 2012.[4] The majority of the remaining regulations go into effect on May 7, 2012. While OCC is already in compliance with most of the final regulations that go into effect on May 7, 2012, OCC believes it appropriate to amend and clarify certain of its rules to ensure compliance with the CFTC's rules as described herein.

1. Clearing Members' Ability To Meet Clearing Fund Assessments

Final CFTC Rule 39.11(d)(2)(i) states that a DCO must have rules ''requiring that its clearing members have *the ability* to meet an assessment *within the time frame of a normal end-of-day variation settlement cycle.*'' [Emphasis added.] While OCC By-Laws Article VIII, Section 6 provides that ''whenever an amount is paid out of the Clearing Fund contribution of a Clearing Member * * * such Clearing Member shall be liable *promptly* to make good the deficiency in its contribution resulting from such payment,'' it does not require that clearing members have the ability to meet an assessment within any particular time period. [Emphasis added.] OCC is therefore proposing that Article VIII, Section 6 of OCC's By-Laws be amended to require that each clearing member must have, and at all times maintain, the ability to meet any clearing fund assessment by 9:00 a.m. Central Time on the first business day following the day on which OCC notifies the clearing member of such assessment. Additionally, OCC is proposing to amend Article VIII, Section 7 of OCC's By-Laws to clarify when a withdrawing clearing member is definitively deemed to no longer be a clearing member and hence will no longer be subject to charges against its clearing fund contribution or be obligated to make further contributions.

2. Clearing Member Financial Resources Requirements

CFTC Rule 39.12(a)(2)(i) states that a DCO must have participation requirements that ''require clearing members to have access to *sufficient financial resources* to meet obligations arising from participation in the [DCO] in *extreme but plausible market conditions.''* [Emphasis added.] In order to avoid any doubt about OCC's compliance with this rule, OCC is proposing to amend Interpretation and Policy .01 of Article V, Section 1 of its By-Laws, add a new Rule 301(d), add an Interpretation and Policy .11 to Rule 305 and add an Interpretation and Policy .02 to Rule 1102 to more closely address the requirements of the referenced CFTC Rule.

3. Clearing Member Operational Capacity Requirements

CFTC Rule 39.12(a)(3) requires a DCO to have participation requirements that ''require clearing members to have *adequate operational capacity* to meet obligations arising from participation in the [DCO] * * * [that] include * * * the ability to process expected volumes and values of transactions cleared by a clearing member within required time frames, including at peak times and on peak days; the ability to fulfill collateral, payment, and delivery obligations imposed by the [DCO]; and the ability to participate in default management activities under the rules of the [DCO] and in accordance with [CFTC Rule 39.16].'' [Emphasis added.] OCC is proposing to amend Article V, Section 1, Interpretation .02, add a new Rule 214(d), add a new Interpretation and Policy .12 to Rule 305, and add new Interpretation and Policy .02 to Rule 1102 to more closely address the requirements of the referenced CFTC Rule. OCC is also proposing to add a new Rule 214(c) to require clearing members to have adequate personnel arrangement to ensure their ability to meet the requirements of clearing membership, and to provide OCC with a list of such personnel.

4. Clearing Member Reporting Requirements

CFTC Rule 39.12(a)(5)(i) states that a DCO must ''require all clearing members, including non-futures commission merchants, to provide to the [DCO] periodic financial reports that contain any financial information that the [DCO] determines is necessary to assess whether participation requirements are being met on an ongoing basis.'' Further, under Rule 39.12(a)(5)(i)(B), a DCO must require non-FCM clearing members to make these periodic financial reports available to the CFTC upon request or, alternatively, a DCO may provide such financial reports directly to the CFTC upon CFTC request. All of OCC's non-FCM clearing members are either registered U.S. broker-dealers or ''non-U.S. Clearing Members'' subject to comparable regulation in their home jurisdictions. OCC Rule 306 generally requires that financial reports required to be filed pursuant to regulations applicable to such clearing members also be filed with OCC, and Rule 306(b) requires non-U.S. Clearing Members to file such financial reports with OCC at such times as OCC may specify. OCC therefore believes that the financial reports it currently receives from non-FCM clearing members fulfill the requirement of Rule 39.12(a)(5)(i). However, in order to avoid any doubt about OCC's compliance with this rule, OCC is proposing to add language to Rule 306(a) to expressly provide that OCC may require clearing members to make financial reports for the purpose of assessing whether the clearing member is meeting OCC's participation requirements on an ongoing basis. With respect to the requirement of Rule 39.12(a)(5)(i)(B), OCC has determined that, for the convenience of its non-FCM clearing members, it will provide the financial reports filed by them to the CFTC (upon the CFTC's request). OCC is proposing to state this policy in a new Interpretation and Policy .03 to OCC Rule 306. OCC is also proposing to amend Interpretation and Policy .02 to OCC Rule 306 to parallel the changes being proposed to Rule 306(a) discussed above.

CFTC Rule 39.12(a)(5)(ii) requires a DCO to adopt rules that ''require clearing members to provide to the [DCO], in a timely manner, information that concerns any financial or business developments that may materially affect the clearing members' ability to continue to comply with participation requirements.'' While OCC Rule 215 already requires a clearing member to give OCC prompt written notice of any change of organization or ownership structure, and certain other OCC Rules have notice requirements that address portions of this new requirement, OCC is proposing to amend OCC Rule 215 to more closely address the requirements of the referenced CFTC Rule, as well as to expand the notice requirement in Rule 215(a)(4) to include changes in clearing member's jurisdiction of organization or incorporation, in

[3] 17 CFR 240.19d–1(c)(2).

[4] *See* Exchange Act Release No. 34–66081, 77 FR 1116 (January 9, 2012).

addition to changes in name or form of business organization. OCC is also proposing to adopt a specific schedule of fines for violation of OCC Rule 215 and to amend Rule 209 to allow OCC to withdraw the amounts of any fines payable in connection with a minor rule violation (as well as any fine levied in connection with a disciplinary proceeding pursuant to Chapter XII of the Rules), including a violation of Rule 215, from a clearing member's bank account, provided that the Clearing Member has not timely contested such fines. The proposed schedule of fines is based on a fine schedule that has been adopted by operating subsidiaries of the Depository Trust & Clearing Corporation. As proposed, fines for violation of amended Rule 215 would be between $300 and $1,500, depending on the number of violations within any rolling 24-month period and the first, second and third violations of Rule 215 would constitute ''minor rule violations'' (see below). The fourth such violation would result in disciplinary action under Chapter XII of OCC's Rules and would not constitute a minor rule violation. OCC believes that adopting a specific schedule of fines will provide OCC with greater ability to ensure compliance by clearing members.

OCC is also proposing to amend Rule 202 to require its clearing members to notify OCC of any changes to the representatives who are authorized to act on behalf of the clearing member and to update their certified lists of signatures.

5. Clearing Member Customer Initial Margin

CFTC Rule 39.13(g)(8)(ii) states that a DCO must ''*require its clearing members to collect customer initial margin * * * from their customers, for nonhedge positions, at a level that is greater than 100 percent of the [DCO's] initial margin requirements with respect to each product and swap portfolio.* The [DCO] shall have reasonable discretion in determining the percentage by which customer initial margins must exceed the [DCO's] initial margin requirements with respect to particular products or swap portfolios.'' [Emphasis added.] Additionally, CFTC Rule 39.13(g)(8)(iii) requires each DCO to ''require its clearing members to ensure that their customers do not withdraw funds from their accounts with such clearing members unless the net liquidating value plus the margin deposits remaining in a customer's account after such withdrawal are sufficient to meet the customer initial margin requirements with respect to all products and swap portfolios held in such customer's account which are cleared by the [DCO].'' OCC is proposing to adopt a new Rule 602 (which had previously been reserved) in order to implement the requirements of CFTC Rule 39.13(g)(8)(ii) and (iii).

6. Initial Margin—Pledged Assets

CFTC Rule 39.13(g)(14) states that ''if a [DCO] permits its clearing members to pledge assets for initial margin while retaining such assets in accounts in the names of such clearing members, the [DCO] shall ensure that such assets are unencumbered and that such pledge has been validly created and validly perfected in the relevant jurisdiction.'' While OCC Rule 604(b)(4)(ii) allows pledged assets to be provided as margin under certain circumstances, OCC is proposing to add a new Interpretation and Policy .07 to Rule 604 to explicitly state that all assets pledged to OCC, for whatever purpose, must be free of any lien or other encumbrance senior to OCC's lien. OCC does not believe that this is a substantive amendment to its Rules, as OCC already takes measures to ensure that its lien over assets provided as initial margin is senior to all other liens or other encumbrances over such assets. OCC is proposing this amendment in order to avoid any doubt as to its compliance with the referenced CFTC Rule.

7. Clearing Member Risk Management Requirements

CFTC Rule 39.13(h)(5)(i) requires a DCO to adopt rules that: ''(A) require its clearing members to maintain current written risk management policies and procedures, which address the risks that such clearing members may pose to the [DCO]; (B) ensure that it has the authority to request and obtain information and documents from its clearing members regarding their risk management policies, procedures, and practices, including, but not limited to, information and documents relating to the liquidity of their financial resources and their settlement procedures; and (C) require its clearing members to make information and documents regarding their risk management policies, procedures, and practices available to the [CFTC] upon [CFTC] request.'' OCC is proposing to adopt a new Rule 311 entitled ''Clearing Member Risk Management'' requiring clearing members to maintain risk management policies and procedures meeting the requirements of CFTC Rule 39.13(h)(5)(i)(A), granting OCC the authority to request and obtain information and documents from clearing members regarding their risk management policies, procedures and practices, and requiring clearing members to make information and documents regarding their risk management policies, procedures and practices available to the CFTC upon its request.

8. Daily Settlements

CFTC Rule 39.14(b) requires that a DCO ''effect a settlement with each clearing member at least once each business day'' and that it ''have the authority and operational capacity to effect a settlement with each clearing member, on an intraday basis, either routinely, when thresholds specified by the DCO are breached, or in times of extreme market volatility.'' OCC Rule 1301(c) provides OCC with the authority to effect intraday settlements and Interpretation and Policy .01 of Rule 1301 states OCC's policy of not requiring intraday variation payments while reserving OCC's right to require such payments from time to time as appropriate. However, for purposes of conforming OCC's Rules more closely to the regulatory language, OCC is proposing to revise Interpretation and Policy .01 of Rule 1301 to clarify that intraday variation payments will not be required ''in the ordinary course'' and to state that circumstances under which OCC may assert its right to require intraday variation payments may include, but are not limited to, breach of any threshold set by OCC or during times of extreme market volatility.

9. Implementation of the MRV Plan

In 1984, the SEC adopted amendments to Rule 19d–1(c) under the Act [5] that allow self-regulatory organizations to adopt, with SEC approval, plans for the disposition of minor violations of rules.[6]

OCC's rules currently give OCC the ability to censure, suspend, expel or limit the activities, functions or operations of any Clearing Member for any violation of OCC's By-Laws or Rules. OCC may also impose fines on Clearing Members for such violations.[7] OCC's Rules have not historically distinguished between those violations of the Rules and By-Laws that are minor and do not call for the full procedural regime applicable to other violations and those that are not minor. With the amendments being proposed to Rule 215, and the inclusion of a specific fine schedule for violations of Rule 215, OCC now believes it is appropriate to put in place an MRV Plan in Rule 1201(b) that

[5] 17 CFR 240.19d–1(c).

[6] *See* Exchange Act Release No. 21013 (June 1, 1984), 49 FR 23828 (June 8, 1984).

[7] *See* OCC Rule 1201.

will meet the definition of a ''minor rule violation plan'' in Exchange Act Rule 19d–1(c)(2).[8] OCC will specify which violations of the By-Laws or Rules will constitute minor rule violations. OCC currently proposes to designate only a violation of Rule 215 as a minor rule violation. A Clearing Member that wishes to contest a minor rule violation may do so by providing written notice to OCC. Upon contesting a minor rule violation, the violation will be deemed to no longer be a minor rule violation and will be subject to the full provisions of OCC's Chapter XII rules with respect to disciplinary proceedings, including the procedures provided therein for answering charges levied against a Clearing Member, which give Clearing Members the right to a hearing and to be represented by counsel at such hearing. Verbatim transcripts of any such hearing are prepared by OCC.

Section 17A(b)(3)(G) of the Act[9] requires that the rules of a clearing agency provide that its members be appropriately disciplined for violation of any provision of the rules of the clearing agency by expulsion, suspension, limitation of activities, functions, and operations, fine, censure, or any other fitting sanction. Section 17A(b)(3)(H) of the Act[10] requires, among other things, that the rules of a clearing agency, in general, provide a fair procedure with respect to the disciplining of members. OCC believes that adopting an MRV Plan furthers the statutory objective of providing a fair procedure for disciplining Clearing Members, and will provide OCC with the ability to impose a meaningful sanction for those rule violations that do not necessarily rise to a level meriting a full disciplinary proceeding under Chapter XII of the Rules. Accordingly, the proposed changes promote the prompt and accurate clearance and settlement of securities transactions and are therefore consistent with the requirements of the Exchange Act and the rules and regulations promulgated thereunder applicable to OCC.

10. Other Amendments

Several of OCC's By-Laws and Rules include now-dated references to the National Association of Securities Dealers, which OCC has corrected to refer instead to the Financial Industry Regulatory Authority. In addition, OCC Rule 307 includes references to a paragraph of Exchange Act Rule 15c3–1[11] that, while correct when Rule 307 was adopted, have since become incorrect due to the reorganization of that rule. OCC is amending its By-Laws and Rules to correct the foregoing references.

OCC believes the proposed changes are consistent with the requirements of the Act. OCC, as a DCO, is required to implement the proposed changes to comply with recent changes to CFTC regulations. OCC notes that the policies of the CEA with respect to clearing are comparable to a number of the policies underlying the Act, such as promoting market transparency for derivatives markets, promoting the prompt and accurate clearance of transactions, and protecting investors and the public interest.

B. Self-Regulatory Organization's Statement on Burden on Competition

OCC does not believe that the proposed rule change will have any impact or impose any burden on competition.

C. Self-Regulatory Organization's Statement on Comments on the Proposed Rule Change Received From Members, Participants, or Others

OCC has not solicited and does not intend to solicit comments regarding this proposed rule change. OCC has not received any unsolicited written comments from interested parties.

III. Solicitation of Comments

Interested persons are invited to submit written data, views and arguments concerning the foregoing, including whether the proposed rule change is consistent with the Act. Comments may be submitted by any of the following methods:

- Electronic comments may be submitted by using the Commission's Internet comment form (*http://www.sec.gov/rules/sro.shtml*), or send an email to *rule-comments@sec.gov.* Please include File No. SR–OCC–2012–06 on the subject line.
- Paper comments should be sent in triplicate to Elizabeth M. Murphy, Secretary, Securities and Exchange Commission, 100 F Street NE., Washington, DC 20549–1090.

All submissions should refer to File Number SR–OCC–2012–06. This file number should be included on the subject line if email is used. To help the Commission process and review your comments more efficiently, please use only one method. The Commission will post all comments on the Commission's Internet Web site (*http://www.sec.gov/rules/sro.shtml*). Copies of the submission, all subsequent amendments, all written statements with respect to the proposed rule change that are filed with the Commission, and all written communications relating to the proposed rule change between the Commission and any person, other than those that may be withheld from the public in accordance with the provisions of 5 U.S.C. 552, will be available for Web site viewing and printing in the Commission's Public Reference Room, 100 F Street NE., Washington, DC 20549 on official business days between the hours of 10 a.m. and 3 p.m. Copies of such filing also will be available for inspection and copying at the principal office of OCC and on OCC's Web site at *http://www.optionsclearing.com/components/docs/legal/rules_and_bylaws/sr_occ_12_06.pdf.* All comments received will be posted without change; the Commission does not edit personal identifying information from submissions. You should submit only information that you wish to make available publicly. All submissions should refer to File Number SR–OCC–2012–06 and should be submitted on or before May 17, 2012.

IV. Commission's Findings and Order Granting Accelerated Approval of Proposed Rule Change

Section 19(b) of the Act[12] directs the Commission to approve a proposed rule change of a self-regulatory organization if it finds that such proposed rule change is consistent with the requirements of the Act and the rules and regulations thereunder applicable to such organization. The Commission finds that the proposed rule change is consistent with the requirements of the Act, in particular the requirements of Section 17A of the Act, and the rules and regulations thereunder applicable to OCC.[13] Specifically, the Commission finds that the proposed rule change is consistent with Section 17A(b)(3)(F) of the Act which requires, among other things, that the rules of a clearing agency be designed to assure the safeguarding of securities and funds which are in the custody and control of the clearing agency because the proposed rule change should allow OCC to better monitor the financial status and risk management procedures of its clearing members.[14] In addition, the Commission finds that the proposed rule change implementing a minor rule violation plan is consistent with the

[8] 17 CFR 240.19d–1(c)(2).

[9] 15 U.S.C. 78q–1(b)(3)(G).

[10] 15 U.S.C. 78q–1(b)(3)(H).

[11] 17 CFR 240.15c3–1.

[12] 15 U.S.C. 78s(b).

[13] 15 U.S.C. 78q–1. In approving this proposed rule change, the Commission has considered the proposed rule's impact on efficiency, competition, and capital formation. 15 U.S.C. 78c(f).

[14] 15 U.S.C. 78q–1(b)(3)(F).

requirements of Section 17A(b)(3)(G) of the Act, which requires that the rules of a clearing agency provide that its members be appropriately disciplined for violation of any provision of the rules of the clearing agency by expulsion, suspension, limitation of activities, functions, and operations, fine, censure, or any other fitting sanction,[15] as well as Section 17A(b)(3)(H) which, among other things, requires that the rules of a clearing agency provide a fair procedure with respect to the disciplining of participants.[16]

In its filing, OCC requested that the Commission approve this proposed rule change on an accelerated basis for good cause shown. OCC cites as the reason for this request OCC's operation as a DCO, which is subject to regulation by the CFTC under the CEA. This rule change is being made according to regulations promulgated by the CFTC, which were previously subject to notice and comment. Not approving this request on an accelerated basis would have a significant impact on OCC's operations as a DCO.

The Commission finds good cause for approving the proposed rule change prior to the 30th day after the date of publication of notice in the **Federal Register** because the proposed rule change allows OCC to implement the regulations of another federal regulatory agency, the CFTC, in accordance with those regulations' effective date.

V. Conclusion

It is therefore ordered, pursuant to Section 19(b)(2) of the Act, that the proposed rule change (SR–OCC–2012–06) is approved on an accelerated basis.

For the Commission, by the Division of Trading and Markets, pursuant to delegated authority.[17]

Elizabeth M. Murphy,

Secretary.

[FR Doc. 2012–10028 Filed 4–25–12; 8:45 am]

BILLING CODE 8011–01–P

[15] 15 U.S.C. 78q–1(b)(3)(G).

[16] 15 U.S.C. 78q–1(b)(3)(H).

[17] 17 CFR 200.30–3(a)(12).

SECURITIES AND EXCHANGE COMMISSION

[Release No. 34–66840; File No. SR–Phlx–2012–23]

Self-Regulatory Organizations; NASDAQ OMX Phlx LLC; Order Approving Proposed Rule Change To Amend Registration, Qualification, and Continuing Education Requirements for Associated Persons

April 20, 2012.

I. Introduction

On February 16, 2012, NASDAQ OMX Phlx LLC (''Phlx'' or ''Exchange'') filed with the Securities and Exchange Commission (''SEC'' or ''Commission''), pursuant to Section 19(b)(1) of the Securities Exchange Act of 1934 (''Act'') [1], and Rule 19b–4 [2] thereunder, a proposed rule change to amend and extend registration, qualification, and continuing education requirements for associated persons of members. The proposed rule change was published for comment in the **Federal Register** on March 7, 2012.[3] The Commission received no comment letters on the proposal. This order approves the proposed rule change.

II. Description of the Proposal

Representative Registration

Exchange Rule 604 applies to all member organizations and generally requires the Series 7 examination for Registered Representatives,[4] Principals,[5] off-floor traders [6] and persons compensated directly or indirectly for the solicitation or handling of business in securities who are not otherwise required to register with the Exchange by Rule 604(a).[7] Rule 604(f) provides that members and persons associated with member organizations who are registered with the Exchange for the purpose of trading NMS Stocks [8] through the facilities of the Exchange, which is the PSX platform, are subject to the provisions of Rule 604(g) and (h) governing principal and representative registration, respectively. Rule 604(h) is applicable today only to PSX users pursuant to Rule 604(f). The Exchange proposes to move the requirements in Rule 604, and expand on those requirements, in proposed Rules 611, 612 and 613.

Rule 604(h) governs the registration of representatives with the Exchange. Specifically, Rule 604(h)(1) requires that all persons engaged or to be engaged in the investment banking or securities business [9] of a member organization who are to function as representatives be registered through WebCRD [10] in the category of registration appropriate to the function they will perform.[11] Before their registration can become effective, they must pass the Series 7 examination. The Exchange proposes to delete Rule 604 and adopt broader registration requirements in proposed Rule 613. Provisions contained in Rule 604(h) would be moved to Rule 613, Representative Registration, in substantially the same form, except with respect to trading floor personnel subject to Rule 620.

Proposed Rule 613(a) would require all persons engaged or to be engaged in the investment banking or securities business of a member organization who are to function as representatives to be registered through WebCRD as specified in Rule 613(e).[12] Trading floor personnel whose activities [13] are limited to the trading floor would continue to be required to register pursuant to Rule 620 and qualify by passing the Exchange's Trading Floor Qualification Examination.[14] In addition, amended Rule 620 would require all trading floor personnel, including clerks, interns, and any other associated persons of a member organization who are not required to register pursuant to Rule 620(a) to register on Form U4 through WebCRD. Thus, the same registration information would be available

[1] 15 U.S.C. 78s(b)(1).

[2] 17 CFR 240.19b–4.

[3] *See* Securities Exchange Act Release No. 66497 (March 1, 2012) 77 FR 13668.

[4] *See* Rule 604(a).

[5] *See* Rule 604(g).

[6] *See* Rule 604(e).

[7] *See* Rule 604(d).

[8] *See* Rule 1(t).

[9] The term ''investment banking or securities business'' means the business, carried on by a broker or dealer, of underwriting or distributing issues of securities, or of purchasing securities and offering the same for sale as a dealer, or of purchasing and selling securities upon the order and for the account of others. *See* Rule 1(m). Of course, the federal securities laws may require broker-dealers to become members of the FINRA in order to perform some of these functions. *See e.g.,* 15 U.S.C. 78o(b)(8).

[10] WebCRD is FINRA's automated Central Registration Depository.

[11] Supplementary Material .04 of Rule 604.

[12] The requirement does not cover members whose activities are limited to the Exchange's options trading floor and who are registered pursuant to Rule 620(a), as well as associated persons whose activities are limited to the Exchange's options trading floor and are registered pursuant to Rule 620(b).

[13] These functions include handling and executing electronic and phoned-in orders on the trading floor, as well as providing markets, both verbally and electronically.

[14] Trading floor personnel, and members on the trading floor, would, however, be subject to new principal registration requirements, described below.

electronically in WebCRD for trading floor members and associated persons as is available for persons registered as General Securities Representatives.

Currently, Supplementary Material .04 to Rule 604, Categories of Representative Registration—General Securities Representative, contains the basic requirement that each member and each person associated with a member organization who is included within the definition of a representative in Rule 1(cc) register with the Exchange as a General Securities Representative and pass the Series 7 examination before his registration may become effective. This provision is not changing and is similar to that of several other self-regulatory organizations (''SROs'').[15] The Exchange proposes to move the provisions of Rule 604(h) into Rule 613 and Supplementary Material .04 of Rule 604 into Rule 613(e) so that the ''registered representative'' categories and requirements would be located in one rule.

The Exchange also proposes Rule 613(f) which would adopt a limited category of representative registration, Proprietary Trader, and a qualifying examination for that category, the Series 56.[16] Members and associated persons engaged solely in proprietary trading, market making or effecting transactions on behalf of a broker-dealer account and who do not do business with the public may register as Proprietary Traders and pass the Series 56 examination, in lieu of registering as General Securities Representatives and passing the Series 7 examination. The Proprietary Trader category would include both Floor Brokers on the Exchange's trading floor and persons performing brokerage functions off the trading floor (''upstairs'').[17]

The Exchange proposes to replace Rule 604 with Rule 613. Rule 613 would cover every person subject to registration as a representative, and unlike Rule 604, it is not limited to associated persons of member organizations for which the Exchange is the designated examining authority (''DEA''). Furthermore, the proposed rules would extend the requirements currently set forth in Rule 604(h), which apply only to member organizations registered to use PSX,[18] to all member organizations. In addition, the language of Rule 613 more closely aligns with the rules of FINRA and NASDAQ, which should facilitate compliance by broker-dealers.

Principal Registration

Persons associated with a member organization who are actively engaged in the management of the member organization's investment banking or securities business, including supervision, solicitation, conduct of business or training persons associated with a member organization for any of these functions are principals. Such persons include: Sole proprietors, officers, partners, managers of offices of supervisory jurisdiction,[19] and directors of corporations. Currently, principals of PSX member firms must register via Form U4 in Web CRD, and qualify by passing an appropriate examination, pursuant to Rule 604(g). The Exchange proposes to extend these principal requirements to cover all member organizations, including those that trade options. The more extensive principal requirements would be embodied in Rules 611 and 612, which would be substantially similar to Rule 604(g) and Supplementary Material .01–.03.

The Exchange also proposes to recognize two new categories of limited principal registration. First, the Exchange proposes to adopt Rule 612(d), which recognizes Registered Options Principals. Each member or person associated with a member organization who is included within the definition of principal, including any person designated as a Chief Compliance Officer on Schedule A of Form BD of a member organization, may register as a Registered Options Principal and pass the Series 4 examination, instead of registering as a General Securities Principal and passing the Series 24 examination, if the person's activities are limited solely to options. Specifically, a Registered Options Principal can only supervise the options activities of a member organization and must be registered pursuant to Exchange Rules as a General Securities Representative.

Second, the Exchange proposes to recognize the Proprietary Trader Principal category as a limited principal category in Rule 612(e). It would apply to persons whose supervisory responsibilities in the investment banking and securities business are limited to the activities of a member organization that involve proprietary trading, market making and effecting transactions on behalf of broker-dealers. It would require that the associated person register pursuant to Exchange Rules as a Proprietary Trader, qualify by passing the Series 24 examination, and not function in a principal capacity with responsibility over any area of business activity other than proprietary trading, market making and effecting transactions on behalf of broker-dealer accounts.[20] This category is in lieu of registration as a General Securities Principal, for which the prerequisite qualification examination is the Series 7. The qualification examination for the proposed new registration category of Proprietary Trader Principal is the Series 24, which is the same qualification required for registration as a General Securities Principal. However, the prerequisite examination for the Proprietary Trader Principal category is the Series 56. Phlx expects the Proprietary Trader Principal category to be available to Phlx member organizations in WebCRD shortly.

Both a Registered Options Principal and a Proprietary Trader Principal would count towards a firm's two-principal requirement in Rule 611(e). If the member organization is involved in activity other than that permitted by these categories, however, an additional principal or principals would be required.

Two additional limited principal registration categories would also be available to all member organizations. Rule 604.02, titled Limited Principal—

[15] *See e.g.*, BX Rules 1031 and 1032, NASDAQ Rules 1031 and 1032, and NASD Rules 1031 and 1032.

[16] The Exchange filed the Series 56 content outline with the Commission. *See* Securities Exchange Act Release No. 66645 (March 22, 2012), 77 FR 19042 (March 29, 2012). The Series 56 would also serve as a prerequisite for the Proprietary Trader principal registration category. The Series 24 would be the appropriate examination for the new principal registration category, as described below.

[17] This provision is the same as the provision in Chicago Board Options Exchange Incorporated (''CBOE'') rules, which requires that an individual Trading Permit Holder or associated person who effects transactions on behalf of a broker-dealer account register and pass the Series 56 examination. *See* CBOE Rule 3.6A, Interpretation and Policy .06.

[18] *See* Rule 604(f).

[19] The Exchange defined the term ''office of supervisory jurisdiction'' to mean any office of a member organization at which any one or more of the following functions take place: Order execution and/or market making; structuring of public offerings or private placements; maintaining custody of customers' funds and/or securities; final acceptance (approval) of new accounts on behalf of the member organization; review and endorsement of customer orders; final approval of advertising or sales literature for use by persons associated with the member organization, pursuant to Rule 605, except for an office that solely conducts final approval of research reports; or responsibility for supervising the activities of persons associated with the member organization at one or more other branch offices of the member organization. This definition is drawn from NASD Rule 3010. The Exchange is adopting the reference to this term in order to cover these managers in the new principal registration requirement. The Exchange is not, at this time, adopting a comprehensive program with regard to such offices, such as that found in NASD Rule 3010. *See* proposed Rule 611(b).

[20] The Exchange worked with other exchanges and FINRA to develop this registration category. The Proprietary Trader Principal registration category is limited to those who supervise persons engaged only in activities covered by the proposed Proprietary Trader registration category.

Financial and Operations, requires each member organization of the Exchange that is subject to Rule 604(g) and that is operating pursuant to the provisions of Rule 15c3–1(a)(1)(ii), (a)(2)(i) or (a)(8) under the Act to designate as Limited Principal—Financial and Operations (''FINOP'') those persons associated with it, at least one of whom shall be its chief financial officer, who perform certain financial and operational duties, as specified in the rule. Each FINOP must register with the Exchange and pass the Series 27 examination. The Exchange proposes to move this provision to Rule 612(b) and extend it to cover trading floor members, in order to ensure that persons handling the financial affairs of a firm are properly registered and qualified, given the importance and complexity of the rules governing financial responsibility for broker-dealers.[21] Although the FINOP is a type of principal registration, because its scope is limited to financial matters, the FINOP does not count toward the two-principal requirement of Rule 611(e).

The Limited Principal—General Securities Sales Supervisor, currently in Rule 604.03, would be moved to Rule 612(c) and would also be available to all member organizations who have associated persons meeting its specific, limited requirements. Like the FINOP, the General Securities Sales Supervisor does not count toward satisfying the two-principal requirement of Rule 611.

Other Rule Modifications

In connection with strengthening its registration rules, the Exchange is proposing to reorganize and renumber its registration rules to better align with those of NASDAQ and FINRA.

In addition to the amendments discussed above, the Exchange proposes to renumber without change: Rule 604(i), Persons Exempt from Registration, to Rule 614 (and Rule 604(i)(2) to Rule 614(b)); and Rule 604(j), Waiver of Requirements, to Rule 615; [22] and Rule 604(g)(5), the general requirement to have a minimum of two principals with respect to each aspect of a member's investment banking and securities business (except a proprietary trading firm with 25 or fewer representatives, which is only required to have one) to Rule 611(e)(i).[23]

The Exchange proposes to consolidate electronic filing requirements in proposed Rule 616, Electronic Filing Requirements for Uniform Forms. Rule 616(a), WebCRD Filing, would require that forms filed pursuant to the Rule 600 Series be filed electronically through WebCRD. Similarly, Rule 616(b), Form U4 and U5 Filing Requirements, would require that initial filings and amendments of Forms U4 and U5 be submitted electronically.[24] In addition, every application for registration filed with the Exchange shall be kept current at all times by supplementary amendments via electronic filing or such other process as the Exchange may prescribe. The amendments shall be filed not later than 30 days after the applicant learns of the facts or circumstances giving rise to the need for the amendment.[25]

The Exchange also proposes to amend OFPA F–34 and EFPA A–7, both titled Failure to Timely Submit Amendments to Form U4, Form U5 and Form BD. These are the corollary minor rule plan provisions for Rule 623, which are being amended only to delete the reference to Rule 604 and add rule numbers 611–613 and 616.

The Exchange proposes to amend Rule 620, Trading Floor Registration, to specifically state the registration categories governed by the rule, to require all trading floor associated persons of member organizations to register via Form U4, to delete unnecessary language and to strengthen the time requirement. Specifically, the Exchange proposes to add to Rule 620(a), which requires Floor Brokers, Specialists and Registered Options Traders on an Exchange trading floor to register under ''Member Exchange'' (''ME'') via Form U4. The Exchange notes that this provision covers members operating on the trading floor and that such members are required to successfully complete the Exchange's Trading Floor Qualification Examination. The Exchange also proposes to delete the reference in Rule 620(a) regarding updating Form U4 within a certain time period and include this requirement in Rule 616.

Rule 620(b) covers all trading floor personnel, such as clerks, interns, and other associated persons of member organizations who are not required to register under Rule 620(a) and requires them to register with the Exchange on a form supplied by the Exchange. The Exchange proposes to require these individuals to be registered on Form U4 in WebCRD. Accordingly, these associated persons will be subject to the comprehensive disclosure obligations of Form U4, which the Exchange believes is an important enhancement. The specific registration category will be ''Floor Employee (''FE'')'' under ''Phlx,'' which will be stated in the rule. The Exchange does not intend to require a qualification examination for non-member trading floor personnel at this time.[26]

The Exchange also proposes to amend Rule 620(b) to provide that following the termination of, or the initiation of a change in the status of any such personnel of a member organization who has been issued an Exchange access card and a trading floor badge, the appropriate Exchange form must be completed, approved and dated by a member organization principal, officer, or member of the member organization with authority to do so, and submitted to the appropriate Exchange department no later than 9:30 a.m. the next business day by the member organization employer. The Exchange proposes to strengthen this requirement by adding that such submission should occur *as soon as possible* but no later than 9:30 a.m. the next business day.

The Exchange proposes to codify an existing fingerprinting requirement into new paragraph (b) of Rule 623, Fingerprinting. This paragraph specifies that a member organization must promptly submit fingerprints on behalf of any person filing Form U4 pursuant to Rule 616, and the Exchange may make registration effective pending receipt of fingerprint information.

Finally, as a result of the expanded and amended registration requirements, additional persons will become subject to Continuing Education requirements in Rule 640.

[21] *See e.g.,* Phlx Rule 703.

[22] Rule 604(j) provides that the Exchange may, in exceptional cases and where good cause is shown, waive the applicable Qualification Examination and accept other standards as evidence of an applicant's qualifications for registration. The Commission expects this waiver authority to be used sparingly, and that where used, the Exchange would keep records of waivers granted and reasons for so doing.

[23] Although there must be a *minimum* of two Principals, *all* persons who engage in specified supervisory functions must be registered as Principals.

[24] As part of the member organization's recordkeeping requirements, it must retain such records for a period of not less than three years, the first two years in an easily accessible place, and make such records available promptly upon request in accordance with Rule 17a–4 under the Act (17 CFR 240.17a–4).

[25] This rule is similar to NASDAQ Rule 1031(d)(3).

[26] The Exchange does not believe that the Series 7, Series 56 or its Trading Floor Qualification Examination is appropriate for the limited functions of a trading floor clerk because these persons are not members trading on the floor, and they are supervised by members. These persons do not execute transactions on the Exchange, but rather enter orders and report trades, for example, and perform related clerical functions. *See* Rule 1090.

III. Discussion and Commission Findings

The Commission believes that this proposed rule change is an important step towards harmonizing the registration, qualification and continuing education requirements across the SROs. In order to meet its obligations under Section 6(b)(1) of the Act[27] to enforce compliance by member firms[28] and their associated persons with the Act, the rules thereunder, and the Exchange's own rules, an exchange must have baseline registration and examination requirements for all persons conducting business on an exchange, as well as for those supervising the activity. In addition, an exchange should have continuing education requirements for registered persons to help ensure that members and persons associated with their members are up to date on the industry, including but not limited to amendments to the Exchange's rules and the securities laws, rules, and regulations that govern their activities.

The Commission finds that the proposed rule change is consistent with the requirements of the Act and the rules and regulations thereunder applicable to a national securities exchange.[29] Specifically, the Commission finds that the proposal is consistent with Section 6(b)(5) of the Act,[30] which requires, among other things, that the rules of a national securities exchange be designed to prevent fraudulent and manipulative acts and practices, to promote just and equitable principles of trade, to remove impediments to, and perfect the mechanism of, a free and open market and a national market system and, in general, to protect investors and the public interest. The Commission believes that the proposed rule change is also consistent with Section 6(c)(3)(B) of the Act,[31] which authorizes exchanges to prescribe standards of training, experience and competence for persons associated with exchange members, and gives exchanges the authority to bar a natural person from becoming a member or a person associated with a member, if the person does not meet the standards of training, experience and competence prescribed in the rules of the exchange.

Phlx's proposed rule change requires all associated persons of member organizations engaged in a securities business on Phlx, as well as those who supervise, train or otherwise oversee those who do, to register with the Exchange via the Form U4, qualify by passing an appropriate examination, and comply with continuing education requirements. Phlx's requirements should help ensure that all associated persons who transact business on Phlx, including those engaged in proprietary trading, are subject to appropriate registration, qualification, and continuing education requirements. These requirements bolster the integrity of the Exchange by helping to ensure that all associated persons engaged in a securities business are, and will continue to be, properly trained and qualified to perform their functions, will be supervised, and can be identified by regulators.

Phlx is adding new limited principal registration categories which are recognized by other exchanges.[32] The Registered Option Principal will be restricted to supervising those persons exclusively involved in options activities, and the required examination, the Series 4, is focused on practices in and rules governing the options industry. The Proprietary Trader Principal category is corollary to the new Proprietary Trader Representative category discussed above and is recognized by many of the other exchanges.[33] Proprietary Trader Principals may supervise persons engaged in proprietary trading, market making and effecting transactions on behalf of broker-dealer accounts and must pass the Series 24 (General Securities Principal) examination.

In sum, under the proposed rule change, all Principals must register through WebCRD and pass appropriate prerequisite examinations, as well as principal examinations that reflect the enhanced responsibility entrusted to principals. In addition, Principals would be subject to the Exchange's continuing education requirements.

Phlx's proposed exceptions from the above-discussed general requirements are appropriate. Any member seeking an exception from the two principal requirement must provide evidence that conclusively indicates to the Exchange that only one principal is necessary. The Commission expects this authority to be used sparingly, because such persons oversee the operations of member firms and provide the first line of defense in ensuring that member firms are complying with the rules of the exchange as well as the federal securities laws. In addition, Phlx may waive the qualification examination requirement in exceptional cases where the applicant has demonstrated that good cause exists to grant the waiver. The Commission also expects this authority to be used sparingly. The Commission notes that these exceptions are substantively the same as exceptions provided in similar rules at other SROs,[34] and it expects Phlx to keep records detailing the reasons for exceptions granted and waivers given.[35]

Phlx's proposed rule change will help ensure that all associated persons of members transacting business on the Exchange, as well as those who supervise, train or otherwise oversee those who do, will be registered with, and qualified by, the Exchange and will be subject to continuing education requirements. The Commission believes the proposal should enhance the Exchange's ability to ensure an effective supervisory structure for those conducting business on its facilities. The requirements apply broadly and should enhance the ability of Exchange members to comply with the Exchange's rules as well as with the federal securities laws.

Additionally, the Commission believes that the proposed rule change is consistent with the principles of Section 11A(a)(1)(22) of the Act in that it seeks to assure fair competition among brokers and dealers and among exchange markets. The Commission believes that the proposed rule change will promote uniformity of regulation across markets, thus reducing opportunities for regulatory arbitrage. Phlx's proposed rule change helps ensure that all persons conducting a securities business through Phlx are appropriately registered, qualified, and supervised, as is required under the Act.

IV. Conclusion

It is therefore ordered, pursuant to Section 19(b)(2) of the Act,[36] that the proposed rule change (SR–Phlx–2012–023), be, and hereby is, approved.

[27] Section 6 requires exchanges to have the ability to enforce compliance by their members and associated persons with the federal securities laws and with their own rules. 15 U.S.C. 78f(b)(1).

[28] Broker and dealers are required to supervise the activities of their associated persons. *See* Section 15(b)(4)(E) of the Act, 15 U.S.C. 78o(b)(4)(E).

[29] In approving this proposed rule change, the Commission has considered the proposed rule's impact on efficiency, competition, and capital formation. *See* 15 U.S.C. 78c(f).

[30] 15 U.S.C. 78f(b)(5).

[31] 15 U.S.C. 78f(c)(3)(B).

[32] *See, e.g.,* CBOE Rule 9.2 and ISE Rule 601.

[33] *See, e.g.,* CBOE Rule 3.6A and NASDAQ Rule 1032(c).

[34] *See, e.g.,* FINRA Rule 1070(d) and NASDAQ Rule 1070(d).

[35] *See* Rule 17a–1(a) under the Act, 17 CFR 240.17a–1(a).

[36] 15 U.S.C. 78s(b)(2).

[37] 17 CFR 200.30–3(a)(12).

For the Commission, by the Division of Trading and Markets, pursuant to delegated authority.[37]

Elizabeth M. Murphy,

Secretary.

[FR Doc. 2012–10027 Filed 4–25–12; 8:45 am]

BILLING CODE 8011–01–P

SECURITIES AND EXCHANGE COMMISSION

[Release No. 34–66839]

Order Temporarily Exempting Broker-Dealers From the Recordkeeping, Reporting, and Monitoring Requirements of Rule 13h–1 Under the Securities Exchange Act of 1934 and Granting an Exemption for Certain Securities Transactions

April 20, 2012.

I. Introduction

On July 27, 2011, the Securities and Exchange Commission (''Commission'') adopted Rule 13h–1 under the Securities Exchange Act of 1934 (''Exchange Act'') concerning large trader reporting to assist the Commission in both identifying, and obtaining trading information on, market participants that conduct a substantial amount of trading activity, as measured by volume or market value, in U.S. securities (such persons are referred to as ''large traders'').[1]

Pursuant to Exchange Act Section 13(h)(6) and Rule 13h–1(g) thereunder,[2] the Commission, by order, may exempt from the provisions of Rule 13h–1, upon specified terms and conditions or for stated periods, any person or class of persons or any transaction or class of transactions from the provisions of Rule 13h–1 to the extent that such exemption is consistent with the purposes of the Exchange Act.

Currently, the compliance date for the broker-dealer recordkeeping and reporting requirements of Rule 13h–1(d) and (e), respectively, as well as the requirement under Rule 13h–1(f) for broker-dealers to monitor their customers' accounts for activity that may trigger the large trader identification requirements of Rule 13h–1, is April 30, 2012. As discussed below, the Commission is temporarily exempting registered broker-dealers from the requirements of new Rule 13h–1 by extending the April 30, 2012 compliance date to provide them with additional time to comply with the recordkeeping, reporting, and monitoring requirements of the Rule.

Specifically, and as discussed more fully below, the Commission is extending the April 30, 2012 compliance date for registered broker-dealers to *May 1, 2013,* except for certain broker-dealers that: (1) Are large traders or (2) have large trader customers that are either broker-dealers or that trade through a ''sponsored access'' arrangement, for which the Commission is extending the compliance date to *November 30, 2012.*[3] The extension of the compliance date will allow broker-dealers additional time to develop, test, and implement enhancements to their recordkeeping and reporting systems as required under Rule 13h–1 and, for those broker-dealer requirements for which the compliance date has been extended to May 1, 2013, for the Commission to consider requests for relief from certain provisions of the Rule.

In addition, the Commission is exempting certain transactions from the definition of the term ''transaction'' provided in Rule 13h–1(a)(6), but for the sole purpose of determining whether a person is a large trader.

II. Broker-Dealer Recordkeeping and Reporting

A. Introduction

Recordkeeping. In addition to requiring large traders to register with the Commission by filing and periodically updating Form 13H, Rule 13h–1 requires certain broker-dealers to, among other things, maintain specified records of transactions that they effect, directly or indirectly, for large traders, and to report to the Commission, upon request of the Commission, such records in electronic format. Specifically, Rule 13h–1(d) requires broker-dealers to maintain records of the information specified in Rule 13h–1(d) for all transactions effected directly or indirectly by or through:

(i) An account such broker-dealer carries for a large trader or an Unidentified Large Trader,[4] or

(ii) If the broker-dealer is a large trader, any proprietary or other account over which such broker-dealer exercises investment discretion.

(iii) Additionally, where a non-broker-dealer carries an account for a large trader or an Unidentified Large Trader, the broker-dealer effecting transactions directly or indirectly for such large trader or Unidentified Large Trader shall maintain records of all of the information required under the Rule for those transactions.

The information required to be maintained for large trader accounts includes the standard information currently captured pursuant to Rule 17a–25 and the Electronic Blue Sheets (''EBS'') system, plus two new fields that are unique to Rule 13h–1: (1) The time that the transaction was executed (''execution time'')[5] and (2) the large trader identification (''LTID'') number(s) associated with the account.[6]

Reporting. Rule 13h–1(e) requires every registered broker-dealer who is itself a large trader or carries an account for a large trader or an Unidentified Large Trader to report electronically to the Commission, at the Commission's request, the required transaction information on such persons whose activity is equal to or greater than the reporting activity level.[7] In addition, the Rule provides that where a non-broker-dealer carries an account for a large trader or an Unidentified Large Trader, the broker-dealer effecting such transactions directly or indirectly for a large trader must electronically report such information, at the Commission's request.

Broker-dealers are required to report information to the Commission upon request of the Commission.[8] Information must be reported to the Commission no later than the day and time specified in the Commission's request for transaction information, which shall be no earlier than the open of business of

[1] *See* Securities Exchange Act Release No. 64976 (July 27, 2011), 76 FR 46960 (Aug. 3, 2011) (''Rule 13h–1 Adopting Release''). The effective date of Rule 13h–1 was October 3, 2011.

[2] *See* 15 U.S.C. 78m and 17 CFR 240.13h–1(g), respectively.

[3] The effective date for Rule 13h–1 remains October 3, 2011. The compliance date for the requirement on large traders to identify to the Commission pursuant to Rule 13h–1(b) was December 1, 2011.

[4] The term ''Unidentified Large Trader'' means each person who has not complied with the identification requirements of paragraphs (b)(1) and (b)(2) of Rule 13h–1 that a registered broker-dealer knows or has reason to know is a large trader. *See* 17 CFR 240.13h–1(a)(9). For purposes of determining whether a registered broker-dealer has reason to know that a person is a large trader, a registered broker-dealer need take into account only transactions in NMS securities effected by or through such broker-dealer. *See id.*

[5] *See* 17 CFR 240.13h–1(d)(2)(xii).

[6] *See* 17 CFR 240.13h–1(d)(2)(xiii).

[7] The reporting activity level is 100 shares. *See* 17 CFR 240.13h–1(a)(8). Accordingly, in response to a Commission request for EBS information, broker-dealers are required to report information for each account in which any large trader's or Unidentified Large Trader's activity amounts to at least 100 shares in the aggregate.

In response to a Commission request for transaction records, in addition to reporting information for any identified large trader (*i.e.,* a person for whom the broker-dealer has received an LTID number), the broker-dealer also should report records for each Unidentified Large Trader, as applicable, including any unique identifying number that the broker-dealer has assigned to such person.

[8] *See* 17 CFR 240.13h–1(e).

the day following the request, unless in unusual circumstances same day submission of information is requested.[9]

B. Request for Extension of Compliance Date and Other Relief From Broker-Dealer Recordkeeping and Reporting Requirements

The Financial Information Forum (''FIF''), representing a variety of broker-dealers and other market participants, has requested that the Commission extend the compliance date to November 30, 2012 for the broker-dealer recordkeeping and reporting provisions of Rule 13h–1, and provide certain substantive relief with respect to those provisions.[10] The Securities Industry and Financial Markets Association (''SIFMA'') also has approached Commission staff with an outline for relief similar to that requested by FIF, including a phased implementation approach.[11]

FIF and SIFMA believe that broker-dealers need additional time to perform the business analysis, development, and testing required to implement the Rule's recordkeeping and reporting requirements. FIF and SIFMA also believe that relief from certain of the substantive requirements of the Rule is warranted in order to reduce the implementation costs for some broker-dealers.[12] Among other things, FIF has requested relief from the reporting requirements for non-self clearing broker-dealers, such that only clearing broker-dealers (including large traders that are themselves self-clearing broker-dealers) would report large trader transaction data to the Commission through the EBS infrastructure. Further, for large trader customers other than those using ''sponsored access'' arrangements, FIF has requested relief from providing LTID numbers on executions in average price processing accounts, and execution time on allocations made out of average price processing accounts.[13] FIF also requested relief for broker-dealers effecting transactions for a large trader other than the large trader's clearing broker.[14] FIF did not request relief from the substantive requirements of the Rule for clearing brokers [15] where the large trader customer either (1) is a U.S. registered broker-dealer or (2) has a ''sponsored access'' arrangement.[16] Finally, FIF and SIFMA requested that the Commission coordinate the Rule's implementation dates with those for a series of separate changes to the EBS record layout that have been proposed by the Intermarket Surveillance Group,[17] and that Commission staff provide guidance on a range of suggested ''Frequently Asked Questions'' relating to the Rule.[18]

C. Extension of Compliance Date for the Broker-Dealer Requirements

The Commission believes that it is appropriate and consistent with the purposes of the Exchange Act to provide a temporary exemption from the broker-dealer recordkeeping, reporting, and monitoring requirements of Rule 13h–1 by extending the Rule's compliance date on a limited basis. FIF raised a variety of implementation concerns relating to the application of the Rule to broker-dealers other than the large trader's clearing broker, and in cases where the large trader customer is neither a U.S.-registered broker-dealer nor a sponsored access customer. An extension of the compliance date should provide the Commission an opportunity to work with market participants to more fully examine the implementation issues raised by FIF, assess the appropriateness of any exemptive relief, and allow broker-dealers time to develop, test, and implement the necessary systems changes once the examination of implementation issues is complete. However, the Commission believes a more modest extension of the compliance date is appropriate for those aspects of the Rule for which substantive relief was not requested—namely compliance by the large trader's clearing broker (including the large trader itself if it is a self-clearing broker-dealer) where the large trader customer either (1) is a U.S. registered broker-dealer or (2) has a ''sponsored access'' arrangement. The Commission believes that temporarily exempting registered broker-dealers from the recordkeeping, reporting, and monitoring requirements of Rule 13h–1 for the stated periods should facilitate the orderly and meaningful implementation of the requirements for those broker-dealers that need more time to comply with the new rule.

Recordkeeping and Reporting Requirements for Broker-Dealers. Accordingly, the Commission is providing a temporary exemption to extend the compliance date to *May 1, 2013,* for the broker-dealer recordkeeping, reporting, and monitoring requirements of Rule 13h–1, except as described below.[19]

The Commission is providing a temporary exemption to extend the compliance date to *November 30, 2012,* for the broker-dealer recordkeeping and reporting requirements of Rule 13h–1 with respect to a clearing broker-dealer for a large trader [20] where the large trader:

[9] *See* 17 CFR 240.13h–1(e). *See also* 17 CFR 240.13h–1(d)(5) (requiring that the records required to be kept pursuant to the provisions of Rule 13h–1 must be available for reporting on the morning after the day the transactions were effected (including Saturdays and holidays)).

[10] *See* Letter from Manisha Kimmel, Executive Director, Financial Information Forum, to Robert Cook, Director, and David Shillman, Associate Director, Division of Trading and Markets, Commission, dated January 25, 2012 (''FIF Letter''), *available at: http://www.sec.gov/comments/s7-10-10/s71010.shtml.*

[11] *See* Letter from Ann L. Vlcek, Managing Director and Associate General Counsel, SIFMA, to David S. Shillman, Associate Director, Division, Commission, dated March 29, 2012, *available at: http://www.sec.gov/comments/s7-10-10/s71010.shtml.*

[12] *See* FIF Letter, *supra* note 10, at 5.

[13] In other words, *executions* in average price processing accounts would be reported with the execution time for each trade but would not include the applicable LTID number(s) associated with the transaction, and *allocations* out of average price processing accounts would be reported with the applicable LTID number(s) but not the execution times of the constituent trades.

[14] *See* FIF Letter, *supra* note 10, at 2.

[15] This includes the large trader broker-dealer itself, if self-clearing.

[16] *See* FIF Letter, *supra* note 10, at 2 and 22. FIF defines a ''sponsored access'' arrangement by reference to the Commission's Market Access release (Securities Exchange Act Release No. 63241 (November 3, 2010), 75 FR 69792 (November 15, 2010) (S7–03–10)), generally as an arrangement where a broker-dealer permits a customer to enter orders into a trading center without using the broker-dealer's trading system (*i.e.,* using the customer's own technology or that of a third party provider). FIF indicates that compliance is easier for sponsored access customers because those arrangements typically are distinct from all other business lines of the broker-dealer, with infrastructure that processes this order flow that is separate from the platforms that handle other client and proprietary flows. *See id.* at 5.

[17] *See, e.g.,* FINRA Regulatory Notice 11–56 (December 2011) (concerning proposed enhancements to EBS submissions). As reflected in that Regulatory Notice, the ISG's proposed enhancements currently have an effective date of August 31, 2012. Commission staff are currently working with the ISG on the changes to the EBS record layout and expects to be able to coordinate the implementation dates as requested.

[18] Commission staff have published written responses to a series of ''Frequently Asked Questions'' that staff have received since the Commission's adoption of Rule 13h–1 and Form 13H. *See* Responses to Frequently Asked Questions Concerning Large Trader Reporting, *available at: http://www.sec.gov/divisions/marketreg/mrfaq.htm.*

[19] In connection with any potential relief that the Commission may grant on or before the new May 1, 2013 date, the Commission would consider the appropriateness of an implementation period as well as a systems testing schedule beyond May 1, 2013.

[20] In its request, FIF asked the Commission for ''relief for broker dealers involved in Large Trader transactions that do not have a direct relationship with the Large Trader. Only the self-clearing and clearing broker dealers with a direct relationship with the Large Trader would perform Large Trader Reporting.'' *See* FIF Letter, *supra* note 10, at 2. In Appendix C of its letter, FIF provides an example of the entities for whom it recommends imposing a recordkeeping and reporting obligation. *See id.* at 25. Specifically, FIF recommends that the reporting

(1) Is a U.S.-registered broker-dealer,[21] or

(2) Trades through a sponsored access arrangement.[22]

On November 30, 2012, these clearing brokers should be prepared to record and report disaggregated trade information, together with the LTID number (or numbers, if applicable) and execution time, for these two categories of large traders, in accordance with the requirements of Rule 13h–1.[23]

As explained in FIF's letter, the trading activity of these categories of large traders typically is processed by clearing brokers on infrastructure separate from that used for other customers, so that compliance with the Rule requires substantially less effort than for other types of large trader customers.[24] Further, the Commission believes that limiting the recordkeeping and reporting responsibility to clearing brokers for this initial compliance period is reasonable as it narrows the universe of reporting entities to broker-dealers that currently are connected to the EBS system.

Monitoring Requirements. The Commission also is providing a temporary exemption to extend the compliance date to May 1, 2013 for the requirement on registered broker-dealers to monitor their customers' accounts for activity that may trigger the large trader identification requirements of Rule 13h–1. This extension should allow firms to focus their resources on the recordkeeping and reporting provisions and facilitate the orderly implementation of those provisions.

III. Exemption for Certain Transactions

Rule 13h–1(a)(1)(i) defines a large trader as a person who, among other things, ''effects transactions for the purchase or sale of any NMS security * * *''[25] Rule 13h–1(a)(6) defines the term ''transactions'' as ''all transactions in NMS securities, excluding exercises or assignments of option contracts,'' except for certain specifically enumerated transactions.[26] The exceptions from the term ''transaction'' were designed to exclude certain transactions from the identifying activity level calculation that are not effected with an intent that is commonly associated with the arm's-length trading of securities in the secondary market and therefore would not fall within the types of transactions that are characterized by the exercise of investment discretion for purposes of Rule 13h–1.[27] Rather, these enumerated categories of transactions generally are effected for materially different reasons that reflect fundamental corporate decision-making or capital formation objectives and therefore are not effected with an intent that is normally associated with secondary-market trading activity in NMS securities.

SIFMA has requested that certain additional types of transactions involving securities offerings be excluded from being counted towards the identifying activity level.[28] Under the Rule, offerings of securities by or on behalf of an issuer generally are excluded for purposes of determining whether a person is a large trader, but that exemption expressly does not apply to ''an offering of securities effected through the facilities of a national securities exchange.''[29] The Commission understands from SIFMA that, while the Rule does exclude the vast majority of primary offerings, certain offerings such as ''dribble out'' programs[30] or offerings ''crossed'' on a national securities exchange[31] occur with enough regularity to warrant relief for the reasons discussed below. In addition, while the Rule excludes offerings of securities by or on behalf of an issuer, it does not exclude sales of stock acquired as part of employee compensation by current or former selling employees of the issuer in connection with those offerings. SIFMA argues in its letter that offerings effected through the facilities of a national securities exchange, as well as sales by issuer employees in an initial public offering or registered secondary offering, similarly are effected for materially different reasons than those normally associated with secondary-market trading activity, and should be excluded for purposes of determining whether a person is a large trader.[32]

The Commission believes that it is appropriate and consistent with the purposes of the Exchange Act to not count these transactions for the purpose of determining whether a person meets the identifying activity level. Accordingly, the Commission hereby is exempting from the definition of the term ''transaction,'' for the sole purpose of determining whether a person is a large trader: (1) Any transaction that is part of an offering of securities by or on behalf of an issuer, or by an underwriter on behalf of an issuer, or an agent for

of execution time should rest with the clearing broker for the originating broker, and any prime broker would be relieved from being required to report execution times. The term ''a clearing broker-dealer for a large trader'' refers to self-clearing and clearing broker-dealers that have a direct relationship with the large trader (including the large trader broker-dealer itself, if self-clearing).

[21] The reportable activity would include proprietary trading by a large trader broker-dealer where the large trader is trading for its own account.

[22] A ''sponsored access arrangement'' in this context refers to an arrangement in which a broker-dealer permits a large trader customer to enter orders directly to a trading center where such orders are not processed through the broker-dealer's own trading system (other than any risk management controls established for purposes of compliance with Rule 15c3–5 under the Exchange Act) and where the orders are routed directly to a trading center, in some cases supported by a service bureau or other third party technology provider. *See* Securities Exchange Act Release No. 63241 (November 3, 2010), 75 FR 69792 (November 15, 2010) (S7–03–10).

[23] Accordingly, large traders that are themselves registered broker-dealers but that are not self-clearing would not be required to connect to the EBS system to report their transactions as of November 30, 2012, and instead could rely on their clearing broker to perform the reporting responsibilities with respect to their reportable transactions during that interim period.

In addition, FIF requested in its letter that the Commission provide guidance on whether execution times are required to be reported in connection with options exercises and assignments as well as exchange traded fund creations and redemptions (*i.e.,* the actual transfers involving the authorized participant and the exchange traded fund sponsor, not the underlying purchases or sales of securities in the secondary market by an authorized participant in connection with the creation or redemption process). *See* FIF Letter, *supra* note 10, at 1. While the Commission continues to consider FIF's broader request for relief, in the interim period, firms will not be required to provide execution times on any options exercises and assignments or exchange traded fund creations and redemptions that they report through EBS for large traders prior to May 1, 2013.

[24] *See* FIF Letter, *supra* note 10, at 5.

[25] *See* 17 CFR 240.13h–1(a)(1)(i).

[26] *See* 17 CFR 240.13h–1(a)(6).

[27] *See* Rule 13h–1 Adopting Release, *supra* note 1, 76 FR at 46967.

[28] *See* Letter from Sean Davy, Managing Director, SIFMA, to David S. Shillman, Associate Director, Division, Commission, dated March 26, 2012, *available at: http://www.sec.gov/comments/s7-10-10/s71010.shtml* (''SIFMA Capital Markets Letter'').

[29] *See* 17 CFR 240.13h–1(a)(6)(ii) (providing an exclusion for ''[a]ny transaction that is part of an offering of securities by or on behalf of an issuer, or by an underwriter on behalf of an issuer, or an agent for an issuer, whether or not such offering is subject to registration under the Securities Act of 1933 (15 U.S.C. 77a), provided, however, that this exemption shall not include an offering of securities effected through the facilities of a national securities exchange'').

[30] SIFMA notes that a ''dribble out program'' enables an issuer to offer and sell its equity securities through one or more registered broker-dealers in incremental registered transactions that are effected over a period of time. *See* SIFMA Capital Markets Letter, *supra* note 28, at 3. Such offerings involve prospectus supplements, comfort letters, opinions of counsel, due diligence, officer's certificates, and filings with the SEC. *See id.* SIFMA states that these transactions can facilitate capital formation for issuers, particularly during periods of high volatility, by avoiding some of the risks of underwritten offerings. *See id.*

[31] SIFMA notes that all of part of an offering of securities by an issuer may be ''crossed'' on a national securities exchange purely for ease of settlement. *See id.* SIFMA believes that the character of this type of offering makes it distinguishable from ordinary secondary market trading. *See id.*

[32] *See id.*

an issuer, whether or not such offering is subject to registration under the Securities Act of 1933, regardless of whether such transaction is effected through the facilities of a national securities exchange; and (2) sales of securities by a selling shareholder in connection with an initial public offering or in a registered secondary offering if such selling shareholder is a current or former employee of the issuer and the securities being sold were acquired as part of the person's compensation as an employee of the issuer. The Commission believes that providing this limited exemption will continue to ensure that Rule 13h–1 provides a mechanism for the Commission to gather data on persons that conduct a significant amount of secondary market trading in NMS securities, while providing limited relief to issuers and selling shareholders who would not otherwise meet the definition of large trader in the absence of these capital market transactions. Because such transactions typically are infrequent in nature and are distinguishable in character from the secondary market activity that is the focus of Rule 13h–1, this exemption should preserve the Commission's ability to identify large traders while reducing burdens on issuers and selling shareholders and thereby assist in the promotion of capital formation.

IV. Conclusion

It is hereby ordered, pursuant to Exchange Act Section 13(h)(6) and Rule 13h–1(g) thereunder, that broker-dealers subject to the recordkeeping, reporting, and monitoring requirements of Rule 13h–1 are temporarily exempted from those requirements until May 1, 2013, except that clearing broker-dealers for a large trader that either (1) is a U.S.-registered broker-dealer,[33] or (2) trades through a sponsored access arrangement,[34] are temporarily exempted from the recordkeeping and reporting provisions of Rule 13h–1 only until November 30, 2012.

Further, *it is hereby ordered,* pursuant to Exchange Act Section 13(h)(6) and Rule 13h–1(g) thereunder, that: (1) Transactions that are part of an offering of securities by or on behalf of an issuer, or by an underwriter on behalf of an issuer, or an agent for an issuer, whether or not such offering is subject to registration under the Securities Act of 1933, or such transaction is effected through the facilities of a national securities exchange, and (2) sales of securities by a selling shareholder in connection with an initial public offering or in a registered secondary offering if such selling shareholder is a current or former employee of the issuer and the securities being sold were acquired as part of the person's compensation as an employee of the issuer, are hereby exempt from the definition of the term ''transaction'' under Rule 13h-1(a)(6) for the sole purpose of determining whether a person is a large trader.

By the Commission.

Elizabeth M. Murphy,

Secretary.

[FR Doc. 2012–10026 Filed 4–25–12; 8:45 am]

BILLING CODE 8011–01–P

[33] This includes the large trader broker-dealer itself, if self-clearing.

[34] A ''sponsored access arrangement'' in this context refers to an arrangement in which a broker-dealer permits a large trader customer to enter orders directly to a trading center where such orders are not processed through the broker-dealer's own trading system (other than any risk management controls established for purposes of compliance with Rule 15c3–5 under the Exchange Act) and where the orders are routed directly to a trading center, in some cases supported by a service bureau or other third party technology provider. *See* Securities Exchange Act Release No. 63241 (November 3, 2010), 75 FR 69792 (November 15, 2010) (S7–03–10).

SMALL BUSINESS ADMINISTRATION

[Disaster Declaration #13065 and #13066]

Hawaii Disaster # HI–00026

AGENCY: U.S. Small Business Administration.

ACTION: Notice.

SUMMARY: This is a Notice of the Presidential declaration of a major disaster for Public Assistance Only for the State of Hawaii (FEMA–4062–DR), dated 04/18/2012.

Incident: Severe Storms, Flooding, and Landslides.

Incident Period: 03/03/2012 through 03/11/2012.

Effective Date: 04/18/2012.

Physical Loan Application Deadline Date: 06/18/2012.

Economic Injury (EIDL) Loan Application Deadline Date: 01/18/2013.

ADDRESSES: Submit completed loan applications to: U.S. Small Business Administration, Processing and Disbursement Center, 14925 Kingsport Road, Fort Worth, TX 76155.

FOR FURTHER INFORMATION CONTACT: A. Escobar, Office of Disaster Assistance, U.S. Small Business Administration, 409 3rd Street SW., Suite 6050, Washington, DC 20416.

SUPPLEMENTARY INFORMATION: Notice is hereby given that as a result of the President's major disaster declaration on 04/18/2012, Private Non-Profit organizations that provide essential services of governmental nature may file disaster loan applications at the address listed above or other locally announced locations.

The following areas have been determined to be adversely affected by the disaster:

Primary Counties Kauai.

The Interest Rates are:

	Percent
For Physical Damage:	
Non-Profit Organizations With Credit Available Elsewhere	3.125
Non-Profit Organizations Without Credit Available Elsewhere	3.000
For Economic Injury:	
Non-Profit Organizations Without Credit Available Elsewhere	3.000

The number assigned to this disaster for physical damage is 13065B and for economic injury is 13066B.

(Catalog of Federal Domestic Assistance Numbers 59002 and 59008)

Joseph P. Loddo,

Acting Associate Administrator for Disaster Assistance.

[FR Doc. 2012–10112 Filed 4–25–12; 8:45 am]

BILLING CODE 8025–01–P

SMALL BUSINESS ADMINISTRATION

Military Reservist Economic Injury Disaster Loans Interest Rate for Third Quarter FY 2012

In accordance with the Code of Federal Regulations 13—Business Credit and Assistance § 123.512, the following interest rate is effective for Military Reservist Economic Injury Disaster Loans approved on or after April 20, 2012.

Military Reservist Loan Program—4.000%

Dated: April 23, 2012.

Joseph P. Loddo,

Acting Associate Administrator for Disaster Assistance.

[FR Doc. 2012–10115 Filed 4–25–12; 8:45 am]

BILLING CODE P

SUSQUEHANNA RIVER BASIN COMMISSION

Projects Approved for Consumptive Uses of Water

AGENCY: Susquehanna River Basin Commission.

ACTION: Notice.

SUMMARY: This notice lists the projects approved by rule by the Susquehanna

River Basin Commission during the period set forth in **DATES**.

DATES: March 1, 2012, through March 31, 2012.

ADDRESSES: Susquehanna River Basin Commission, 1721 North Front Street, Harrisburg, PA 17102–2391.

FOR FURTHER INFORMATION CONTACT: Richard A. Cairo, General Counsel, telephone: (717) 238–0423, ext. 306; fax: (717) 238–2436; email: *rcairo@srbc.net.* Regular mail inquiries may be sent to the above address.

SUPPLEMENTARY INFORMATION: This notice lists the projects, described below, receiving approval for the consumptive use of water pursuant to the Commission's approval by rule process set forth in 18 CFR 806.22(f) for the time period specified above:

Approvals by Rule Issued Under 18 CFR 806.22(f)

1. EXCO Resources (PA), LLC, Pad ID: Elk Run Hunt Club Drilling Pad 1, ABR–201203001, Davidson Township, Sullivan County, Pa.; Consumptive Use of Up to 8.000 mgd; Approval Date: March 8, 2012.

2. EOG Resources, Inc., Pad ID: WOLFE B Pad, ABR–201203002, Athens Township, Bradford County, Pa.; Consumptive Use of Up to 4.999 mgd; Approval Date: March 12, 2012.

3. EOG Resources, Inc., Pad ID: SGL 94D Pad, ABR–201203003, Lawrence Township, Clearfield County, Pa.; Consumptive Use of Up to 4.999 mgd; Approval Date: March 12, 2012.

4. Southwestern Energy Production Company, Pad ID: EASTMAN, ABR–201203004, New Milford Township, Susquehanna County, Pa.; Consumptive Use of Up to 4.999 mgd; Approval Date: March 12, 2012.

5. Southwestern Energy Production Company, Pad ID: GREMMEL, ABR–201203005, Jackson Township, Susquehanna County, Pa.; Consumptive Use of Up to 4.999 mgd; Approval Date: March 12, 2012.

6. Southwestern Energy Production Company, Pad ID: BIENKO, ABR–201203006, New Milford and Jackson Townships, Susquehanna County, Pa.; Consumptive Use of Up to 4.999 mgd; Approval Date: March 12, 2012.

7. Talisman Energy USA, Inc., Pad ID: 03 109 Alderfer H, ABR–201203007, Columbia Township, Bradford County, Pa.; Consumptive Use of Up to 6.000 mgd; Approval Date: March 12, 2012.

8. EOG Resources, Inc., Pad ID: SGL 94C Pad, ABR–201203008, Lawrence Township, Clearfield County, Pa.; Consumptive Use of Up to 4.999 mgd; Approval Date: March 13, 2012.

9. EOG Resources, Inc., Pad ID: GHFC Pad D, ABR–201203009, Goshen Township, Clearfield County, Pa.; Consumptive Use of Up to 4.999 mgd; Approval Date: March 13, 2012.

10. Inflection Energy LLC, Pad ID: Nature Boy East, ABR–201203010, Upper Fairfield Township, Lycoming County, Pa.; Consumptive Use of Up to 4.000 mgd; Approval Date: March 13, 2012.

11. WPX Energy Appalachia, LLC, Pad ID: McNamara Well Pad, ABR–201203011, Silver Lake Township, Susquehanna County, Pa.; Consumptive Use of Up to 4.000 mgd; Approval Date: March 13, 2012.

12. WPX Energy Appalachia, LLC, Pad ID: Adams Well Pad, ABR–201203012, Silver Lake Township, Susquehanna County, Pa.; Consumptive Use of Up to 4.000 mgd; Approval Date: March 13, 2012.

13. Cabot Oil & Gas Corporation, Pad ID: ManzerA P1, ABR–201203013, Gibson Township, Susquehanna County, Pa.; Consumptive Use of Up to 3.575 mgd; Approval Date: March 14, 2012.

14. Chesapeake Appalachia, LLC, Pad ID: R&N, ABR–201203014, Cherry Township, Sullivan County, Pa.; Consumptive Use of Up to 7.500 mgd; Approval Date: March 14, 2012.

15. Cabot Oil & Gas Corporation, Pad ID: MackeyR P1, ABR–201203015, Lathrop Township, Susquehanna County, Pa.; Consumptive Use of Up to 3.575 mgd; Approval Date: March 14, 2012.

16. Cabot Oil & Gas Corporation, Pad ID: TeddickM P1, ABR–201203016, Brooklyn Township, Susquehanna County, Pa.; Consumptive Use of Up to 3.575 mgd; Approval Date: March 14, 2012.

17. Ultra Resources, Inc., Pad ID: Granger 853, ABR–201203017, Gaines Township, Tioga County, Pa.; Consumptive Use of Up to 4.990 mgd; Approval Date: March 19, 2012.

18. Chesapeake Appalachia, LLC, Pad ID: Matthews, ABR–201203018, Sheshequin Township, Bradford County, Pa.; Consumptive Use of Up to 7.500 mgd; Approval Date: March 20, 2012.

19. Chesapeake Appalachia, LLC, Pad ID: Floydie, ABR–201203019, Tuscarora Township, Bradford County, Pa.; Consumptive Use of Up to 7.500 mgd; Approval Date: March 20, 2012.

20. Chesapeake Appalachia, LLC, Pad ID: Maggie, ABR–201203020, Tuscarora Township, Bradford County, Pa.; Consumptive Use of Up to 7.500 mgd; Approval Date: March 20, 2012.

21. Chesapeake Appalachia, LLC, Pad ID: CMI, ABR–201203021, Wysox Township, Bradford County, Pa.; Consumptive Use of Up to 7.500 mgd; Approval Date: March 20, 2012.

22. SWEPI, LP, Pad ID: Parker 727, ABR–201203022, Liberty Township, Tioga County, Pa.; Consumptive Use of Up to 4.000 mgd; Approval Date: March 21, 2012.

23. SWEPI, LP, Pad ID: Schanbacher 711, ABR–201203023, Liberty Township, Tioga County, Pa.; Consumptive Use of Up to 4.000 mgd; Approval Date: March 21, 2012.

24. Chesapeake Appalachia, LLC, Pad ID: Schulze, ABR–201203024, Rush Township, Susquehanna County, Pa.; Consumptive Use of Up to 7.500 mgd; Approval Date: March 21, 2012.

25. Chief Oil & Gas, LLC, Pad ID: Stasiak Drilling Pad #1, ABR–201203025, Pike Township, Bradford County, Pa.; Consumptive Use of Up to 2.000 mgd; Approval Date: March 23, 2012.

26. Chief Oil & Gas, LLC, Pad ID: Ober Drilling Pad #1, ABR–201203026, Asylum Township, Bradford County, Pa.; Consumptive Use of Up to 2.000 mgd; Approval Date: March 23, 2012.

27. SWEPI, LP, Pad ID: Wilson 286, ABR–201203027, Charleston Township, Tioga County, Pa.; Consumptive Use of Up to 4.000 mgd; Approval Date: March 27, 2012.

28. Range Resources—Appalachia, LLC, Pad ID: Porter, Stephen, ABR–201203028, Cogan House Township, Lycoming County, Pa.; Consumptive Use of Up to 5.000 mgd; Approval Date: March 27, 2012.

29. Range Resources—Appalachia, LLC, Pad ID: Roaring Run Unit, ABR–201203029, Cogan House Township, Lycoming County, Pa.; Consumptive Use of Up to 5.000 mgd; Approval Date: March 27, 2012.

30. Chesapeake Appalachia, LLC, Pad ID: Hattie BRA, ABR–201203030, Wilmot Township, Bradford County, Pa.; Consumptive Use of Up to 7.500 mgd; Approval Date: March 30, 2012.

31. Chesapeake Appalachia, LLC, Pad ID: Circle Z BRA, ABR–201203031, Wilmot Township, Bradford County, Pa.; Consumptive Use of Up to 7.500 mgd; Approval Date: March 30, 2012.

32. Chesapeake Appalachia, LLC, Pad ID: RBF BRA, ABR–201203032, Wysox Township, Bradford County, Pa.; Consumptive Use of Up to 7.500 mgd; Approval Date: March 30, 2012.

33. Chesapeake Appalachia, LLC, Pad ID: Rainbow BRA, ABR–201203033, Terry Township, Bradford County, Pa.; Consumptive Use of Up to 7.500 mgd; Approval Date: March 30, 2012.

Authority: Pub. L. 91–575, 84 Stat. 1509 et seq., 18 CFR parts 806, 807, and 808.

Dated: April 13, 2012.

Stephanie L. Richardson,

Secretary to the Commission.

[FR Doc. 2012–10004 Filed 4–25–12; 8:45 am]

BILLING CODE 7040–01–P

OFFICE OF THE UNITED STATES TRADE REPRESENTATIVE

Fiscal Year 2012 Allocation of Additional Tariff-Rate Quota Volume for Raw Cane Sugar and Reallocation of Unused Fiscal Year 2012 Tariff-Rate Quota Volume for Raw Cane Sugar

AGENCY: Office of the United States Trade Representative.

ACTION: Notice.

SUMMARY: The Office of the United States Trade Representative (USTR) is providing notice of country-by-country allocations of additional Fiscal Year (FY) 2012 in-quota quantity of the tariff-rate quota (TRQ) for imported raw cane sugar and of country-by-country reallocations of the FY 2012 in-quota quantity of the tariff-rate quota for imported raw cane sugar.

DATES: *Effective Date:* April 26, 2012.

ADDRESSES: Inquiries may be mailed or delivered to Ann Heilman-Dahl, Director of Agricultural Affairs, Office of Agricultural Affairs, Office of the United States Trade Representative, 600 17th Street, NW., Washington, DC 20508.

FOR FURTHER INFORMATION CONTACT: Ann Heilman-Dahl, Office of the United States Trade Representative, Office of Agricultural Affairs, 202–395–6127.

SUPPLEMENTARY INFORMATION: Pursuant to Additional U.S. Note 5 to Chapter 17 of the Harmonized Tariff Schedule of the United States (HTS), the United States maintains TRQs for imports of raw cane and refined sugar.

Section 404(d)(3) of the Uruguay Round Agreements Act (19 U.S.C. 3601(d)(3)) authorizes the President to allocate the in-quota quantity of a TRQ for any agricultural product among supplying countries or customs areas. The President delegated this authority to the United States Trade Representative under Presidential Proclamation 6763 (60 FR 1007).

On April 19, 2012, the Secretary of Agriculture announced an additional in-quota quantity of the TRQ for raw cane sugar for the remainder of FY 2012 (ending September 30, 2012) in the amount of 381,018 metric tons, raw value (MTRV). This quantity is in addition to the minimum amount to which the United States has already committed to pursuant to the World Trade Organization (WTO) Uruguay Round Agreements (1,117,195 MTRV, as announced by **Federal Register** notice on August 12, 2011). Finally, USTR has determined to reallocate 73,446 MTRV of the minimum amount of the original TRQ for raw cane sugar from countries that have stated they will be unable to fill previously allocated FY 2012 raw sugar TRQ quantities. USTR is allocating this total quantity of 454,463 MTRV to the following countries in the amounts specified below:

Country	Combined FY 2012 re-allocation and increase
Argentina	24,061
Australia	46,443
Barbados	3,917
Belize	6,155
Bolivia	4,476
Brazil	81,136
Colombia	13,430
Costa Rica	8,393
Dominican Republic	30,000
Ecuador	6,155
El Salvador	14,548
Guatemala	26,858
Guyana	6,714
Honduras	5,596
India	4,476
Mauritius	2,000
Mozambique	7,275
Nicaragua	11,751
Panama	16,227
Peru	22,942
Philippines	75,540
South Africa	12,869
Swaziland	8,953
Thailand	7,834
Zimbabwe	6,714

These allocations are based on the countries' historical shipments to the United States. The allocations of the raw cane sugar TRQ to countries that are net importers of sugar are conditioned on receipt of the appropriate verifications of origin, and certificates for quota eligibility must accompany imports from any country for which an allocation has been provided.

Conversion factor: 1 metric ton = 1.10231125 short tons.

Ronald Kirk,

United States Trade Representative.

[FR Doc. 2012–10019 Filed 4–25–12; 8:45 am]

BILLING CODE 3190–W2–P

DEPARTMENT OF TRANSPORTATION

Federal Aviation Administration

Notice of Intent To Rule on Request To Release Airport Property at the South Texas Regional Airport at Hondo (formerly Hondo Municipal Airport), Hondo, TX

AGENCY: Federal Aviation Administration (FAA), DOT.

ACTION: Notice of Request to Release Airport Property.

SUMMARY: The FAA proposes to rule and invite public comment on the release of land at the South Texas Regional Airport at Hondo under the provisions of Section 125 of the Wendell H. Ford Aviation Investment Reform Act for the 21st Century (AIR 21).

DATES: Comments must be received on or before May 29, 2012.

ADDRESSES: Comments on this application may be mailed or delivered to the FAA at the following address: Mr. Mike Nicely, Manager, Federal Aviation Administration, Southwest Region, Airports Division, Texas Airports Development Office, ASW–650, Fort Worth, Texas 76137.

In addition, one copy of any comments submitted to the FAA must be mailed or delivered to the Mr. Robert Herrera, City Manager, at the following address: 1600 Avenue M, Hondo, Texas 78861.

FOR FURTHER INFORMATION CONTACT: Mr. Steven Cooks, Program Manager, Federal Aviation Administration, Texas Airports Development Office, ASW–650, 2601 Meacham Boulevard, Fort Worth, Texas 76137, Telephone: (817) 222–5608, email: *Steven.Cooks@faa.gov,* fax: (817) 222–5989.

The request to release property may be reviewed in person at this same location.

SUPPLEMENTARY INFORMATION: The FAA invites public comment on the request to release property at the South Texas Regional Airport at Hondo under the provisions of the AIR 21.

The following is a brief overview of the request:

The City of Hondo requests the release of 119.639 acres of non-aeronautical airport property. The land was acquired by Deed without Warranty from the United States on July 16, 1948. The property to be released will be sold to allow for further commercial and light industrial development along the Union Pacific Railroad corridor which generally parallels US Highway 90 along the south boundary of the airport.

Any person may inspect the request in person at the FAA office listed above

under **FOR FURTHER INFORMATION CONTACT**.

In addition, any person may, upon request, inspect the application, notice and other documents relevant to the application in person at the South Texas Regional Airport at Hondo, telephone number (830) 426–3378.

Issued in Fort Worth, Texas on April 23, 2012.

Kelvin L. Solco,

Manager, Airports Division.

[FR Doc. 2012–9739 Filed 4–25–12; 8:45 am]

BILLING CODE P

DEPARTMENT OF TRANSPORTATION

Federal Highway Administration

Notice To Rescind Notice of Intent To Prepare an Environmental Impact Statement; Mahoning and Trumbull Counties, OH

AGENCY: Federal Highway Administration (FHWA), DOT.

ACTION: Rescind Notice of Intent (NOI) to prepare an Environmental Impact Statement (EIS).

SUMMARY: The FHWA is issuing this notice to advise the public that we are rescinding the NOI published on November 5, 2004 to prepare an EIS for improvements that were proposed to the transportation system on US 62 in the cities of Youngstown and Hubbard in Mahoning and Trumbull Counties, Ohio.

FOR FURTHER INFORMATION CONTACT: Noel F. Mehlo Jr., Environmental Program Manager, Federal Highway Administration, 200 North High Street, Room 328, Columbus, Ohio 43215, Telephone: (614) 280–6841.

SUPPLEMENTARY INFORMATION: The FHWA, in cooperation with the ODOT is rescinding the NOI to prepare an EIS for a project that had been proposed to improve the transportation system in Mahoning and Trumbull Counties, Ohio. The NOI is being rescinded because ODOT lacks funding to build this project. It was determined that while the EIS could be completed, the funding reality is such that the project could not be designed or constructed for many years into the future and the project can no longer demonstrate fiscal constraint. Fiscal Constraint is a demonstration that the entire program of projects can be implemented, and is a requirement of federal regulation.

Catalog of Federal Domestic Assistance Number and Title: FHWA 20.205 Highway Planning and Construction (A, B).

Authority: 23 U.S.C. 315; 49 CFR 1.48.

Issued on: April 16, 2012.

Laura S. Leffler,

Division Administrator, Federal Highway Administration, Columbus, Ohio.

[FR Doc. 2012–10003 Filed 4–25–12; 8:45 am]

BILLING CODE 4910–22–P

DEPARTMENT OF TRANSPORTATION

Maritime Administration

[Docket No. MARAD 2012 0044]

Requested Administrative Waiver of the Coastwise Trade Laws: Vessel MARIE ELENA; Invitation for Public Comments

AGENCY: Maritime Administration, Department of Transportation.

ACTION: Notice.

SUMMARY: As authorized by 46 U.S.C. 12121, the Secretary of Transportation, as represented by the Maritime Administration (MARAD), is authorized to grant waivers of the U.S.-build requirement of the coastwise laws under certain circumstances. A request for such a waiver has been received by MARAD. The vessel, and a brief description of the proposed service, is listed below.

DATES: Submit comments on or before May 29, 2012.

ADDRESSES: Comments should refer to docket number MARAD–2012 0044. Written comments may be submitted by hand or by mail to the Docket Clerk, U.S. Department of Transportation, Docket Operations, M–30, West Building Ground Floor, Room W12–140, 1200 New Jersey Avenue SE., Washington, DC 20590. You may also send comments electronically via the Internet at *http://www.regulations.gov.* All comments will become part of this docket and will be available for inspection and copying at the above address between 10 a.m. and 5 p.m., E.T., Monday through Friday, except federal holidays. An electronic version of this document and all documents entered into this docket is available on the World Wide Web at *http://www.regulations.gov.*

FOR FURTHER INFORMATION CONTACT: Joann Spittle, U.S. Department of Transportation, Maritime Administration, 1200 New Jersey Avenue SE., Room W21–203, Washington, DC 20590. Telephone 202–366–5979, Email *Joann.Spittle@dot.gov.*

SUPPLEMENTARY INFORMATION: As described by the applicant the intended service of the vessel MARIE ELENA is:

Intended Commercial Use of Vessel: ''Sailboat passenger charter.''

Geographic Region: ''New York, Connecticut, Rhode Island, New Jersey, Massachusetts, New Hampshire, Maine, Maryland, Virginia, North Carolina, South Carolina, Georgia, Florida.''

The complete application is given in DOT docket MARAD–2012 0044 at *http://www.regulations.gov.* Interested parties may comment on the effect this action may have on U.S. vessel builders or businesses in the U.S. that use U.S.-flag vessels. If MARAD determines, in accordance with 46 U.S.C. 12121 and MARAD's regulations at 46 CFR part 388, that the issuance of the waiver will have an unduly adverse effect on a U.S.-vessel builder or a business that uses U.S.-flag vessels in that business, a waiver will not be granted. Comments should refer to the docket number of this notice and the vessel name in order for MARAD to properly consider the comments. Comments should also state the commenter's interest in the waiver application, and address the waiver criteria given in § 388.4 of MARAD's regulations at 46 CFR part 388.

Privacy Act

Anyone is able to search the electronic form of all comments received into any of our dockets by the name of the individual submitting the comment (or signing the comment, if submitted on behalf of an association, business, labor union, etc.). You may review DOT's complete Privacy Act Statement in the **Federal Register** published on April 11, 2000 (Volume 65, Number 70; Pages 19477–78).

By Order of the Maritime Administrator.

Dated: April 19, 2012.

Julie P. Agarwal,

Secretary, Maritime Administration.

[FR Doc. 2012–9876 Filed 4–25–12; 8:45 am]

BILLING CODE 4910–81–P

DEPARTMENT OF THE TREASURY

Submission for OMB Review; Comment Request

March 23, 2012.

The Department of the Treasury will submit the following information collection request to the Office of Management and Budget (OMB) for review and clearance in accordance with the Paperwork Reduction Act of 1995, Public Law 104–13, on or after the date of publication of this notice.

DATES: Comments should be received on or before May 29, 2012 to be assured of consideration.

ADDRESSES: Send comments regarding the burden estimate, or any other aspect of the information collection, including

suggestion for reducing the burden, to (1) Office of Information and Regulatory Affairs, Office of Management and Budget, Attention: Desk Officer for Treasury, New Executive Office Building, Room 10235, Washington, DC 20503, or email at *OIRA_Submission@OMB.EOP.GOV* and (2) Treasury PRA Clearance Officer, 1750 Pennsylvania Ave., NW., Suite 8140, Washington, DC 20220, or on-line at *www.PRAComment.gov.*

FOR FURTHER INFORMATION CONTACT: Copies of the submission(s) may be obtained by calling (202) 927–5331, email at *PRA@treasury.gov,* or the entire information collection request maybe found at *www.reginfo.gov.*

Treasury Inspector General for Tax Administration (TIGTA)

OMB Number: 1505–0217.

Type of Review: Extension without change of a currently approved collection.

Title: Treasury Inspector General for Tax Administration (TIGTA) Generic Survey Request.

Abstract: The TIGTA's Office of Audit's mission is to provide independent oversight of IRS activities. Through its audit programs TIGTA promotes efficiency and effectiveness in the administration of internal revenue laws, including the prevention and detection of fraud, waste, and abuse affecting tax administration. To accomplish this, TIGTA Office of Audit at times finds it necessary to contact a limited number of taxpayers (including businesses) for various reasons.

Affected Public: Private Sector: businesses or other for-profits, not for-profit institutions; Individuals or Households.

Estimated Total Annual Burden Hours: 833.

Dawn D. Wolfgang,

Treasury PRA Clearance Officer.

[FR Doc. 2012–10068 Filed 4–25–12; 8:45 am]

BILLING CODE 4810–25–P

DEPARTMENT OF THE TREASURY

Submission for OMB Review; Comment Request

April 23, 2012.

The Department of the Treasury will submit the following information collection request to the Office of Management and Budget (OMB) for review and clearance in accordance with the Paperwork Reduction Act of 1995, Public Law 104–13, on or after the date of publication of this notice.

DATES: Comments should be received on or before May 29, 2012 to be assured of consideration.

ADDRESSES: Send comments regarding the burden estimate, or any other aspect of the information collection, including suggestion for reducing the burden, to the (1) Office of Information and Regulatory Affairs, Office of Management and Budget, Attention: Desk Officer for Treasury, New Executive Office Building, Room 10235, Washington, DC 20503, or email at *OIRA_Submission@OMB.EOP.GOV* and to the (2) Treasury PRA Clearance Officer, 1750 Pennsylvania Ave. NW., Suite 8140, Washington, DC 20220, or on-line at *www.PRAComment.gov.*

FOR FURTHER INFORMATION CONTACT: Copies of the submission(s) may be obtained by calling (202) 927–5331, email at *PRA@treasury.gov,* or the entire information collection request maybe found at *www.reginfo.gov.*

Alcohol and Tobacco Tax and Trade Bureau (TTB)

OMB Number: 1513–0013.

Type of Review: Revision of a currently approved collection.

Title: Change of Bond (Consent of Surety).

Form: TTB F 5000.18.

Abstract: A Change of Bond (Consent of Surety), TTB F 5000.18, is executed by both the bonding company and a proprietor and acts as a binding legal agreement between the two parties to extend the terms of a bond. A bond is necessary to cover specific liabilities on the revenue produced from untaxpaid commodities. TTB F 5000.18 is filed with TTB and a copy is retained by TTB as long as it remains current and in force.

Affected Public: Private Sector: Businesses or other for-profits.

Estimated Total Burden Hours: 3,533.

OMB Number: 1513–0027.

Type of Review: Revision of a currently approved collection.

Title: Taxable Articles Without Payment of Tax.

Form: TTB F 5200.14.

Abstract: The tobacco product manufacturer or export warehouse proprietor is liable for the tax on tobacco products until execution of the certification by Customs or an authorized receiving officer on TTB F 5200.14, which indicates verification of export or bonded transfer. TTB needs this information to protect the revenue. If this TTB form is not properly completed, TTB will assess the tax on the manufacturer of tobacco products or cigarette papers and tubes or on the proprietor of the export warehouse or customs manufacturing warehouse for products not exported or properly disposed of.

Affected Public: Private Sector: Businesses or other for-profits; Federal Government; Individuals or Households.

Estimated Total Burden Hours: 59,840.

OMB Number: 1513–0051.

Type of Review: Revision of a currently approved collection.

Title: Application For An Alcohol Fuel Producer Under 26 U.S.C. 5181.

Form: TTB F 5110.74.

Abstract: This form is used by persons who wish to produce and receive spirits for the production of alcohol fuels as a business or for their own use and for State and local registration where required. The form describes the person(s) applying for the permit, location of the proposed operation, type of material used for production, and amount of spirits to be produced.

Affected Public: Private Sector: Businesses or other for-profits, Farms; Individuals or Households.

Estimated Total Burden Hours: 377.

OMB Number: 1513–0090.

Type of Review: Extension without change of a currently approved collection.

Title: Excise Tax Return—Alcohol and Tobacco (Puerto Rico).

Form: TTB F 5000.25.

Abstract: Businesses in Puerto Rico report their Federal excise tax liability on distilled spirits, wine, beer, tobacco products, cigarette papers and tubes on TTB F 5000.25. TTB needs this form to identify the taxpayer and to determine the amount and type of taxes due and paid.

Affected Public: Private Sector: Businesses or other for-profits.

Estimated Total Burden Hours: 119.

Dawn D. Wolfgang,

Treasury PRA Clearance Officer.

[FR Doc. 2012–10038 Filed 4–25–12; 8:45 am]

BILLING CODE 4810–31–P

Reader Aids

Federal Register

Vol. 77, No. 81

Thursday, April 26, 2012

CUSTOMER SERVICE AND INFORMATION

Federal Register/Code of Federal Regulations	
General Information, indexes and other finding aids	**202–741–6000**
Laws	**741–6000**
Presidential Documents	
Executive orders and proclamations	**741–6000**
The United States Government Manual	**741–6000**
Other Services	
Electronic and on-line services (voice)	**741–6020**
Privacy Act Compilation	**741–6064**
Public Laws Update Service (numbers, dates, etc.)	**741–6043**
TTY for the deaf-and-hard-of-hearing	**741–6086**

ELECTRONIC RESEARCH

World Wide Web

Full text of the daily Federal Register, CFR and other publications is located at: **www.fdsys.gov.**

Federal Register information and research tools, including Public Inspection List, indexes, and links to GPO Access are located at: **www.ofr.gov.**

E-mail

FEDREGTOC-L (Federal Register Table of Contents LISTSERV) is an open e-mail service that provides subscribers with a digital form of the Federal Register Table of Contents. The digital form of the Federal Register Table of Contents includes HTML and PDF links to the full text of each document.

To join or leave, go to **http://listserv.access.gpo.gov** and select *Online mailing list archives, FEDREGTOC-L, Join or leave the list (or change settings);* then follow the instructions.

PENS (Public Law Electronic Notification Service) is an e-mail service that notifies subscribers of recently enacted laws.

To subscribe, go to **http://listserv.gsa.gov/archives/publaws-l.html** and select *Join or leave the list (or change settings);* then follow the instructions.

FEDREGTOC-L and **PENS** are mailing lists only. We cannot respond to specific inquiries.

Reference questions. Send questions and comments about the Federal Register system to: **fedreg.info@nara.gov**

The Federal Register staff cannot interpret specific documents or regulations.

Reminders. Effective January 1, 2009, the Reminders, including Rules Going Into Effect and Comments Due Next Week, no longer appear in the Reader Aids section of the Federal Register. This information can be found online at **http://www.regulations.gov.**

CFR Checklist. Effective January 1, 2009, the CFR Checklist no longer appears in the Federal Register. This information can be found online at **http://bookstore.gpo.gov/.**

FEDERAL REGISTER PAGES AND DATE, APRIL

19521–19924 2
19925–20280 3
20281–20490 4
20491–20696 5
20697–20986 6
20987–21386 9
21387–21622 10
21623–21840 11
21841–22184 12
22185–22462 13
22463–22662 16
22663–23108 17
23109–23372 18
23373–23594 19
23595–24136 20
24137–24340 23
24341–24574 24
24575–24828 25
24829–25014 26

CFR PARTS AFFECTED DURING APRIL

At the end of each month the Office of the Federal Register publishes separately a List of CFR Sections Affected (LSA), which lists parts and sections affected by documents published since the revision date of each title.

3 CFR

Proclamations:
8789 20275
8790 20491
8791 20493
8792 20495
8793 20497
8794 20499
8795 20501
8796 21385
8797 22179
8798 22181
8799 22183
8800 23595
8801 24575
8802 24577
8803 24579

Executive Orders:
13605 23107

Administrative Orders:
Memorandums:
Memorandum of March 30, 2012 20277
Memorandum of April 18, 2012 24339
Presidential Determinations:
No. 2012–05 of March 30, 2010 21387
No. 2012–06 of April 3, 2010 21389
Notices:
Notice of April 10, 2012 21839

5 CFR

532 19521
890 19522
9303 20697

7 CFR

27 20503
28 20503
210 19525
301 .....22185, 22663
319 .....22463, 22465, 22663
457 22467
927 .....21623, 21624
983 21841
985 21391
993 21842
1206 21843
1427 19925
1728 19525
3201 20281

Proposed Rules:
28 21684
226 21018
319 22510
761 22444
762 22444
765 22444
766 22444
772 22444
810 .....21685, 23420
930 24640
966 21492

8 CFR

Proposed Rules:
103 19902
212 19902

9 CFR

Proposed Rules:
93 20319
307 19565
381 .....19565, 24873
500 24873

10 CFR

8 21625
72 24585
430 .....20291, 22472, 24341

Proposed Rules:
50 23161
52 23161
429 21038
430 21038
1046 20743

12 CFR

204 .....21846, 22666
210 21854
1301 21628
1310 21637

Proposed Rules:
9 21057
225 .....21494, 22686
1026 21875

13 CFR

107 .....20292, 23373
120 19531

14 CFR

1 22186
25 21861
33 22187
39 .....20505, 20508, 20511, 20515, 20518, 20520, 20522, 20526, 20700, 20987, 21395, 21397, 21400, 21402, 21404, 21420, 21422, 21426, 21429, 22188, 23109, 23380, 23382, 23385, 23388, 24137, 24342, 24344, 24347, 24349, 24351, 24353, 24355, 24357, 24360, 24362, 24364, 24367, 24585, 24829, 24831, 24833, 24835
71 .....19927, 19928, 19929, 19930, 19931, 20528, 21662, 22190, 22473, 23113, 23114, 23597

73 22667
97 ....22475, 22477, 24369, 24371
117 20530
121 20530
400 20531
401 20531
404 20531
405 20531
406 20531
413 20531
414 20531
415 20531
417 20531
420 20531
431 20531
433 20531
435 20531
437 20531
440 20531
460 20531

Proposed Rules:

16 20319
39 ....19565, 19567, 20319, 20321, 20572, 20743, 20746, 22686, 23166, 23169, 23420, 23637, 23638, 24425, 24643
71 ....19953, 20747, 21505, 21506, 21508, 21509, 21510, 23171, 23172, 24156, 24157, 24159

15 CFR

732 22191
734 22191
738 22191
740 22191
742 22191
744 ....23114, 24587
774 22191
801 24373
806 24373
807 24373

Proposed Rules:

748 22689
922 ....21878, 23425

16 CFR

320 22200
321 22200
322 22200
603 22200
610 22200
611 22200
613 22200
614 22200
901 22200

Proposed Rules:

Ch. I 22234

17 CFR

1 ....20128, 21278
3 20128
23 ....20128, 21278
230 20550
37 21278
38 21278
39 21278
240 20550
260 20550

Proposed Rules:

230 20749
270 20749

18 CFR

40 24594

Proposed Rules:

38 24427
40 24646

19 CFR

122 23598
133 24375
151 24375
171 19533
172 19533

Proposed Rules:

101 24656

20 CFR

638 22204
655 24137
670 22204

Proposed Rules:

638 22236
670 22236

21 CFR

520 20987
558 ....22667, 24138
866 19534

Proposed Rules:

558 22247

22 CFR

22 20294
42 20294
120 22668
123 22668

23 CFR

1340 20550

24 CFR

570 24139

Proposed Rules:

200 21880

26 CFR

1 ....22480, 22483, 23391, 24380
31 ....23391, 24611

Proposed Rules:

1 ....22515, 22516, 24657
31 24660
40 22691
46 22691
53 23429

27 CFR

4 22485
5 22485
7 22485

28 CFR

16 23116
540 19932

Proposed Rules:

16 ....23173, 24878

29 CFR

15 22204
1630 20295
1910 19933
1926 23117
4003 22488
4007 20295
4022 22215

Proposed Rules:

15 22236
825 22519

30 CFR

75 20700

Proposed Rules:

934 24661
1206 20574

32 CFR

183 22671
706 24612

33 CFR

100 ....19534, 19934, 23118, 23119, 23120, 23123, 23125, 23599, 23601
110 22489
117 ....19937, 20716, 20718, 21864, 22216, 22217, 22492, 24146, 24147
151 19537
165 ....19544, 20295, 20719, 21433, 21436, 21439, 21446, 21448, 21866, 21868, 22218, 22221, 22495, 23395, 23601, 24381, 24838, 24840
334 20295

Proposed Rules:

100 ....19570, 19954, 19957, 19963, 20324, 20750, 22706, 24433
110 19957
117 ....21890, 22520
151 21360
155 21360
156 21360
157 21360
165 ....19573, 19957, 19963, 19967, 19970, 20324, 21893, 22523, 22525, 22530, 22706, 24880
334 ....20330, 20331

36 CFR

219 21162

37 CFR

201 20988
202 20988

Proposed Rules:

381 24662

38 CFR

3 23128
17 23615
20 23128

39 CFR

501 ....23396, 23618

Proposed Rules:

111 23643
3001 23176

40 CFR

9 ....20296, 24613
50 20218
52 ....20308, 20894, 21451, 21453, 21663, 22224, 22497, 22500, 22676, 23130, 23133, 23396, 23619, 23622, 24148, 24382, 24385, 24392, 24397, 24399, 24843, 24845, 24857
60 ....23396, 23399
61 23396
62 ....24403, 24405
63 ....22848, 23399
180 ....20314, 20721, 21670, 21676, 23135, 23625
260 22226
261 ....22226, 22229
266 22229
300 21870
372 23409
721 ....20296, 24408, 24613

Proposed Rules:

52 ....20333, 20575, 20577, 20582, 21512, 21690, 21702, 21896, 21908, 21911, 21913, 22249, 22533, 22540, 22550, 23178, 23181, 23191, 23192, 23193, 23647, 23652, 23988, 24160, 24436, 24440, 24441, 24768, 24794, 24883
60 ....22392, 24272
62 ....24272, 24451
131 20585
174 20334
180 ....20334, 20752
228 20590
300 21919
712 22707
716 22707
720 22707
721 ....19862, 21065, 22707
723 22707
725 22707
766 22707
790 22707
795 19862
799 ....19862, 21065, 22707

41 CFR

Proposed Rules:

1 24452
25 24452

42 CFR

88 24628
410 24409
411 24409
416 24409
417 22072
419 24409
422 22072
423 22072
480 20317
489 24409
495 24409

Proposed Rules:

412 23193
413 23193
495 23193

43 CFR

Proposed Rules:

10 23196

44 CFR

64 ....20988, 24858
65 ....20727, 20992, 20994, 20997
67 ....20999, 21000, 21471, 21476, 21485

Proposed Rules:

67 ....21516, 22551

45 CFR

Proposed Rules:

162 22950
262 24667
265 24667

46 CFR

2 ....20727, 22232

24 ..... 20727, 22232
30 ..... 20727, 22232
64 19546
70 ..... 20727, 22232
90 ..... 20727, 22232
91 ..... 20727, 22232
160 19937
188 ..... 20727, 22232
Proposed Rules:
197 21360
531 23202
801 19975
806 19975
812 19975
837 19975
852 19975
873 19975

47 CFR

0 23630
1 23630
14 24632
54 ..... 20551, 23630
61 20551
64 20553
73 20555
74 21002
Proposed Rules:
1 22720
2 22720
25 22720
27 ..... 19575, 22720
73 ..... 20756, 23203, 23432
76 24302
101 22720

48 CFR

Ch. 1 ..... 23364, 23371
1 ..... 23365, 23370
2 23365
4 23368
6 23369
11 23365
15 23369
19 23369
23 23365
25 23368
52 ..... 23365, 23368, 23370
202 23631
209 23631
212 23631
213 23631
216 23631
217 23631
242 23631
245 23631
252 23631
1602 19522
1615 19522
1632 19522
1652 19522
Proposed Rules:
203 20598
204 20598
205 20598
209 20598
211 20598
212 20598
219 20598
225 20598
226 20598
227 20598
232 20598
237 20598
243 20598
244 20598
246 20598
247 20598
252 20598
832 23204
852 23204

49 CFR

1 20531
10 19943
173 22504
209 24415
213 24415
214 24415
215 24415
216 24415
217 24415
218 24415
219 24415
220 24415
221 24415
222 24415
223 24415
224 24415
225 24415
227 24415
228 24415
229 ..... 21312, 23159, 24415
230 24415
231 24415
232 24415
233 24415
234 24415
235 24415
236 24415
237 24415
238 ..... 21312, 23159, 24415
239 24415
240 24415
241 24415
242 24415
244 24415
350 24104
383 24104
386 24863
390 24104
391 24104
571 20558
Proposed Rules:
105 24885
171 24885
172 ..... 21714, 24885
173 ..... 21714, 24885
175 21714
177 24885
178 24885
180 24885
196 19800
198 19800
385 19589
390 19589
395 19589
571 22638
1002 19591
1011 19591
1108 ..... 19591, 23208
1109 ..... 19591, 23208
1111 19591
1115 19591

50 CFR

17 ..... 20948, 23060
224 19552
622 ..... 19563, 21679, 23632
635 21015
648 ..... 19944, 19951, 20728, 22678, 23633, 23635, 24151
660 ..... 22679, 22682, 24634
679 ..... 19564, 20317, 20571, 21683, 22683, 23159, 24152
Proposed Rules:
1 23425
13 22267
17 ..... 19756, 21920, 21936, 23008, 23432, 24908, 24915
20 23094
22 ..... 22267, 22278
217 ..... 19976, 23548
223 ..... 19597, 20773, 20774, 22749, 23209
224 ..... 19597, 22749, 23209
229 21946
622 ..... 20775, 21955, 23652
635 ..... 24161, 24669
660 ..... 19991, 20337, 21958
665 23654
679 ..... 19605, 20339, 21716, 22750, 22753, 23326

LIST OF PUBLIC LAWS

This is a continuing list of public bills from the current session of Congress which have become Federal laws. It may be used in conjunction with "P L U S" (Public Laws Update Service) on 202–741–6043. This list is also available online at *http://www.archives.gov/federal-register/laws*.

The text of laws is not published in the **Federal Register** but may be ordered in "slip law" (individual pamphlet) form from the Superintendent of Documents, U.S. Government Printing Office, Washington, DC 20402 (phone, 202–512–1808). The text will also be made available on the Internet from GPO's Federal Digital System (FDsys) at *http://www.gpo.gov/fdsys*. Some laws may not yet be available.

H.R. 473/P.L. 112–103
Help to Access Land for the Education of Scouts (Apr. 2, 2012; 126 Stat. 284)

H.R. 886/P.L. 112–104
United States Marshals Service 225th Anniversary Commemorative Coin Act (Apr. 2, 2012; 126 Stat. 286)

Last List April 2, 2012

Public Laws Electronic Notification Service (PENS)

PENS is a free electronic mail notification service of newly enacted public laws. To subscribe, go to *http://listserv.gsa.gov/archives/publaws-l.html*

Note: This service is strictly for E-mail notification of new laws. The text of laws is not available through this service. **PENS** cannot respond to specific inquiries sent to this address.