AUTHENTICATED
U.S. GOVERNMENT
INFORMATION
GPO

FEDERAL REGISTER

Vol. 77 Monday,
No. 98 May 21, 2012

Pages 29853–30184

OFFICE OF THE FEDERAL REGISTER

The **FEDERAL REGISTER** (ISSN 0097–6326) is published daily, Monday through Friday, except official holidays, by the Office of the Federal Register, National Archives and Records Administration, Washington, DC 20408, under the Federal Register Act (44 U.S.C. Ch. 15) and the regulations of the Administrative Committee of the Federal Register (1 CFR Ch. I). The Superintendent of Documents, U.S. Government Printing Office, Washington, DC 20402 is the exclusive distributor of the official edition. Periodicals postage is paid at Washington, DC.

The **FEDERAL REGISTER** provides a uniform system for making available to the public regulations and legal notices issued by Federal agencies. These include Presidential proclamations and Executive Orders, Federal agency documents having general applicability and legal effect, documents required to be published by act of Congress, and other Federal agency documents of public interest.

Documents are on file for public inspection in the Office of the Federal Register the day before they are published, unless the issuing agency requests earlier filing. For a list of documents currently on file for public inspection, see *www.ofr.gov.*

The seal of the National Archives and Records Administration authenticates the Federal Register as the official serial publication established under the Federal Register Act. Under 44 U.S.C. 1507, the contents of the **Federal Register** shall be judicially noticed.

The **Federal Register** is published in paper and on 24x microfiche. It is also available online at no charge at *www.fdsys.gov*, a service of the U.S. Government Printing Office.

The online edition of the **Federal Register** is issued under the authority of the Administrative Committee of the Federal Register as the official legal equivalent of the paper and microfiche editions (44 U.S.C. 4101 and 1 CFR 5.10). It is updated by 6:00 a.m. each day the **Federal Register** is published and includes both text and graphics from Volume 59, 1 (January 2, 1994) forward. For more information, contact the GPO Customer Contact Center, U.S. Government Printing Office. Phone 202-512-1800 or 866-512-1800 (toll free). E-mail, *gpo@custhelp.com.*

The annual subscription price for the **Federal Register** paper edition is $749 plus postage, or $808, plus postage, for a combined **Federal Register, Federal Register** Index and List of CFR Sections Affected (LSA) subscription; the microfiche edition of the **Federal Register** including the **Federal Register** Index and LSA is $165, plus postage. Six month subscriptions are available for one-half the annual rate. The prevailing postal rates will be applied to orders according to the delivery method requested. The price of a single copy of the daily **Federal Register,** including postage, is based on the number of pages: $11 for an issue containing less than 200 pages; $22 for an issue containing 200 to 400 pages; and $33 for an issue containing more than 400 pages. Single issues of the microfiche edition may be purchased for $3 per copy, including postage. Remit check or money order, made payable to the Superintendent of Documents, or charge to your GPO Deposit Account, VISA, MasterCard, American Express, or Discover. Mail to: U.S. Government Printing Office—New Orders, P.O. Box 979050, St. Louis, MO 63197-9000; or call toll free 1-866-512-1800, DC area 202-512-1800; or go to the U.S. Government Online Bookstore site, see *bookstore.gpo.gov.*

There are no restrictions on the republication of material appearing in the **Federal Register.**

How To Cite This Publication: Use the volume number and the page number. Example: 77 FR 12345.

Postmaster: Send address changes to the Superintendent of Documents, Federal Register, U.S. Government Printing Office, Washington, DC 20402, along with the entire mailing label from the last issue received.

SUBSCRIPTIONS AND COPIES

PUBLIC

Subscriptions:

Paper or fiche	**202–512–1800**
Assistance with public subscriptions	**202–512–1806**

General online information **202–512–1530; 1–888–293–6498**

Single copies/back copies:

Paper or fiche	**202–512–1800**
Assistance with public single copies	**1–866–512–1800 (Toll-Free)**

FEDERAL AGENCIES

Subscriptions:

Paper or fiche	**202–741–6005**
Assistance with Federal agency subscriptions	**202–741–6005**

FEDERAL REGISTER WORKSHOP

THE FEDERAL REGISTER: WHAT IT IS AND HOW TO USE IT

FOR: Any person who uses the Federal Register and Code of Federal Regulations.

WHO: Sponsored by the Office of the Federal Register.

WHAT: Free public briefings (approximately 3 hours) to present:

1. The regulatory process, with a focus on the Federal Register system and the public's role in the development of regulations.
2. The relationship between the Federal Register and Code of Federal Regulations.
3. The important elements of typical Federal Register documents.
4. An introduction to the finding aids of the FR/CFR system.

WHY: To provide the public with access to information necessary to research Federal agency regulations which directly affect them. There will be no discussion of specific agency regulations.

WHEN: Tuesday, June 12, 2012
9 a.m.–12:30 p.m.

WHERE: Office of the Federal Register
Conference Room, Suite 700
800 North Capitol Street, NW.
Washington, DC 20002

RESERVATIONS: (202) 741–6008

Printed on recycled paper.

Contents

Federal Register

Vol. 77, No. 98

Monday, May 21, 2012

Agency for Healthcare Research and Quality
NOTICES
Agency Information Collection Activities; Proposals, Submissions, and Approvals, 30007–30014

Agriculture Department, Office of the Chief Financial Officer
NOTICES
Agency Information Collection Activities; Proposals, Submissions, and Approvals, 29963

Agriculture Department
See Agriculture Department, Office of the Chief Financial Officer
See Animal and Plant Health Inspection Service
See Food Safety and Inspection Service

Animal and Plant Health Inspection Service
PROPOSED RULES
Bovine Spongiform Encephalopathy; Importation of Bovines and Bovine Products, 29914

Centers for Disease Control and Prevention
NOTICES
Agency Information Collection Activities; Proposals, Submissions, and Approvals, 30014–30015
Meetings:
Advisory Committee on Immunization Practices, 30015
Disease, Disability, and Injury Prevention and Control Special Emphasis Panel, 30015–30016
Disease, Disability, and Injury Prevention and Control Special Emphasis Panel; Initial Review, 30015

Coast Guard
RULES
Drawbridge Operations:
Black River, La Crosse, WI, 29895–29897
Willamette River, Portland, OR, 29897–29898
Safety Zones:
Annual Fireworks Events in the Captain of the Port Detroit Zone, 29898–29899
International Special Operations Forces Week Capability Exercise, Seddon Channel, Tampa, FL, 29899–29901
Marysville Days Fireworks, St. Clair River, Marysville, MI, 29901–29903
PROPOSED RULES
Drawbridge Operations:
Alabama River, AL, 29924–29927
Carlin Bayou, LA, 29927–29929
Safety Zones:
Cape Charles Fireworks, Cape Charles Harbor, Cape Charles, VA, 29929–29932
Nautical City Festival Air Show, Rogers City, MI, 29932–29935

Commerce Department
See International Trade Administration
See National Oceanic and Atmospheric Administration
NOTICES
Agency Information Collection Activities; Proposals, Submissions, and Approvals, 29964–29965

Defense Department
NOTICES
Agency Information Collection Activities; Proposals, Submissions, and Approvals:
Federal Acquisition Regulation; Davis Bacon Act Price Adjustment (Actual Method), 29982–29983
Federal Acquisition Regulation; Novation/Change of Name Requirements, 29983–29984
Federal Acquisition Regulation; Subcontract Consent, 29983
Federal Acquisition Regulation; U.S. Flag Air Carriers Statement, 29984–29985
Federal Advisory Committee Renewals, 29985–29986

Defense Nuclear Facilities Safety Board
NOTICES
Savannah River Site Building 235–F Safety, 29986–29988

Drug Enforcement Administration
NOTICES
Importers of Controlled Substances; Applications:
Stepan Co., 30025
Importers of Controlled Substances; Registrations:
Formulation Technologies, LLC, 30025
Manufacturers of Controlled Substances; Applications:
Agilent Technologies, 30025–30026
American Radiolabeled Chemicals, Inc., 30027
AMPAC Fine Chemicals LLC, 30026
Austin Pharma, LLC, 30027
Johnson Matthey, Inc., 30026–30027
Noramco Inc. (GA), 30026
Stepan Co., 30026
Manufacturers of Controlled Substances; Registrations:
Cambrex Charles City, Inc., 30028
Cedarburg Pharmaceuticals, Inc., 30028
Johnson Matthey, Inc., Pharmaceuticals Materials, 30028–30029
Siegfried (USA), 30027–30028

Education Department
NOTICES
Agency Information Collection Activities; Proposals, Submissions, and Approvals:
Federal Student Aid; William D. Ford Federal Direct Loan Program Deferment Request Forms, 29988–29989
William D. Ford Federal Direct Loan Program—Internship/Residency and Loan Debt Burden Forbearance Forms, 29988
Applications for New Awards:
Technology and Media Services for Individuals With Disabilities, Stepping-up Technology Implementation, 29989–29995

Energy Department
See Federal Energy Regulatory Commission
RULES
Loan Guarantees for Projects That Employ Innovative Technologies, 29853–29855
NOTICES
Meetings:
Electricity Advisory Committee, 29995–29996

Environmental Management Site-Specific Advisory Board, Oak Ridge Reservation, 29996–29997
Environmental Management Site-Specific Advisory Board, Portsmouth, 29997

Environmental Protection Agency
RULES
Air Quality Designations for 2008 Ozone National Ambient Air Quality Standards, 30088–30160
Approvals and Promulgations of Implementation Plans:
Oregon; Infrastructure Requirements for 1997 8-Hour Ozone National Ambient Air Quality Standard, 29904–29905
Implementation of 2008 National Ambient Air Quality Standards for Ozone:
Nonattainment Area Classifications Approach, Attainment Deadlines, etc., 30160–30171
PROPOSED RULES
2012 Technical Corrections, Clarifying and Other Amendments:
Greenhouse Gas Reporting Rule, Proposed Confidentiality Determinations for Certain Data Elements of the Fluorinated Gas Source Category, 29935–29953

Executive Office of the President
See Presidential Documents

Federal Aviation Administration
RULES
Airworthiness Directives:
Cessna Aircraft Company Airplanes, 29863–29865
Fokker Services B.V. Airplanes, 29861–29863
Saab AB, Saab Aerosystems Airplanes, 29855–29857
The Boeing Company Airplanes, 29857–29861
Amendments of Class E Airspace:
Baraboo, WI, 29870–29871
Leesville, LA, 29865–29866
Maryville, MO, 29867–29868
Monahans, TX, 29868–29869
New Philadelphia, OH, 29869–29870
Springhill, LA, 29866–29867
Establishments of Class E Airspace:
Branson West, MO, 29871–29872
Eldon, MO, 29873–29874
Freer, TX, 29874–29875
Houston, MO, 29875
Pender, NE, 29872–29873
Red Cloud, NE, 29871
PROPOSED RULES
Airworthiness Directives:
BAE SYSTEMS (Operations) Limited Airplanes, 29914–29916
Amendments of Class D Airspace:
Sault Ste Marie, ON, 29916–29917
Amendments of Class E Airspace:
Battle Creek, MI, 29918–29920
Kerrville, TX, 29921–29922
Lemmon, SD, 29920–29921
Sweetwater, TX, 29917–29918
Repair Stations, 30054–30086
NOTICES
Environmental Impact Statements; Availability, etc.:
Wiscasset and Edgecomb, Lincoln County, ME, 30046
Meetings:
RTCA Special Committee 222, Immarsat Aeronautical Mobile Satellite Route Services, 30046–30047
Opportunities for Public Comment on Surplus Property Releases:
Michael J Smith Field, Beaufort, NC, 30047

Federal Deposit Insurance Corporation
NOTICES
Meetings:
FDIC Advisory Committee on Community Banking, 30003–30004
Terminations of Receivership:
Douglass National Bank, Kansas City, MO, 30004

Federal Energy Regulatory Commission
NOTICES
Annual Changes in Producer Price Index for Finished Goods:
Revisions to Oil Pipeline Regulations Pursuant to Energy Policy Act of 1992, 29997–29998
Applications:
Georgia Power Co., 29999
Madison Farms, 29998–29999
Combined Filings, 29999–30001
Complaints:
PBF Holding Company LLC, Toledo Refining Company LLC, v. Enbridge Energy, LP, 30001–30002
Primary Power, LLC v. PJM Interconnection, LLC, 30002–30003
Regency Field Services LLC v. DCP Black Lake Pipe Holdings, LP, 30002
Staff Attendances:
PJM Interconnection, LLC, Task Forces, 30003
Southwest Power Pool, Inc. Task Force, 30003

Federal Railroad Administration
NOTICES
Petitions for Alternative Locomotive Crashworthiness Designs, 30047–30048
Petitions for Waivers of Compliance, 30048–30049

Federal Reserve System
NOTICES
Changes in Bank Control:
Acquisitions of Shares of a Bank or Bank Holding Company, 30004

Federal Trade Commission
PROPOSED RULES
Regulatory Reviews:
Guides for Rebuilt, Reconditioned and Other Used Automobile Parts Industry, 29922–29924

Federal Transit Administration
PROPOSED RULES
Application of Buy America Waivers to Rolling Stock Overhauls and Rebuilds, 29953–29955

Fiscal Service
NOTICES
Agency Information Collection Activities; Proposals, Submissions, and Approvals:
Resolution Authorizing Execution of Depositary, Financial Agency, and Collateral Agreement, etc., 30050

Food and Drug Administration
NOTICES
Meetings:
Clinical Study Design and Performance of Hospital Glucose Sensors, 30016–30017
International Capacity Building with Respect to Food Safety, 30017–30018

Food Safety and Inspection Service
NOTICES
Requests for Nominations:
National Advisory Committee on Meat and Poultry Inspection, 29963–29964

General Services Administration
NOTICES
Agency Information Collection Activities; Proposals, Submissions, and Approvals:
Federal Acquisition Regulation; Davis Bacon Act Price Adjustment (Actual Method), 29982–29983
Federal Acquisition Regulation; Novation/Change of Name Requirements, 29983–29984
Federal Acquisition Regulation; Subcontract Consent, 29983
Federal Acquisition Regulation; U.S. Flag Air Carriers Statement, 29984–29985

Health and Human Services Department
See Agency for Healthcare Research and Quality
See Centers for Disease Control and Prevention
See Food and Drug Administration
See National Institutes of Health
NOTICES
Statement of Organization, Functions, and Delegations of Authority:
Office of the Assistant Secretary for Health, 30004–30007

Healthcare Research and Quality Agency
See Agency for Healthcare Research and Quality

Homeland Security Department
See Coast Guard
See U.S. Customs and Border Protection

Interior Department
See Land Management Bureau
NOTICES
Meetings:
U.S. Extractive Industries Transparency Initiative Stakeholder Assessment; Webinar and Workshop, 30022–30023

International Trade Administration
RULES
Revocation of Antidumping and Countervailing Duty Orders, 29875–29884
NOTICES
North American Free-Trade Agreement; Article 1904 Binational Panel Reviews, 29965–29966

Judicial Conference of the United States
NOTICES
Meetings:
Judicial Conference Advisory Committee on Rules of Bankruptcy Procedure, 30025
Judicial Conference Advisory Committee on Rules of Criminal Procedure, 30024–30025
Judicial Conference Committee on Rules of Practice and Procedure, 30025

Justice Department
See Drug Enforcement Administration
RULES
Amendment of Americans With Disabilities Act Title II and Title III Regulations:
Extend Compliance Date for Certain Requirements Related to Existing Pools and Spas Provided by State and Local Governments and by Public Accommodations, 30174–30180

Land Management Bureau
NOTICES
Applications for Withdrawals of Public Lands:
Alaska, 30023–30024
Proposed Extensions of Withdrawals of Public Lands:
South Dakota, 30024

Maritime Administration
NOTICES
Requested Administrative Waiver of the Coastwise Trade Laws:
Vessel Windsong, 30049

National Aeronautics and Space Administration
NOTICES
Agency Information Collection Activities; Proposals, Submissions, and Approvals:
Federal Acquisition Regulation; Davis Bacon Act Price Adjustment (Actual Method), 29982–29983
Federal Acquisition Regulation; Novation/Change of Name Requirements, 29983–29984
Federal Acquisition Regulation; Subcontract Consent, 29983
Federal Acquisition Regulation; U.S. Flag Air Carriers Statement, 29984–29985

National Institutes of Health
NOTICES
Meetings:
Center for Scientific Review, 30021
National Cancer Institute, 30019
National Institute of Allergy and Infectious Diseases, 30020–30021
National Institute of Diabetes and Digestive and Kidney Diseases, 30019
National Institute of Environmental Health Sciences, 30019
National Institute of General Medical Sciences, 30019–30020
National Institute on Aging, 30020

National Oceanic and Atmospheric Administration
RULES
Sea Turtle Conservation:
Shrimp and Summer Flounder Trawling Requirements, 29905–29913
PROPOSED RULES
Fisheries of the Exclusive Economic Zone off Alaska and Pacific Halibut Fisheries:
Observer Program, 29961–29962
Fisheries off West Coast States:
Pacific Coast Groundfish Fishery Management Plan; Trawl Rationalization Program, 29955–29961
NOTICES
Agency Information Collection Activities; Proposals, Submissions, and Approvals:
Subsistence Fishery For Pacific Halibut in Waters off Alaska: Registration and Marking of Gear, 29966
Applications:
Marine Mammals; File No. 17157, 29966–29967

Environmental Impact Statements; Terminations, Preparations, etc.:, 29967–29969
Marine Mammal Stock Assessment Reports, 29969–29981
Meetings:
Fisheries of the Gulf of Mexico; Southeast Data, Assessment, and Review, 29981
Permits:
Marine Mammals; File No. 17086, 29981–29982

National Science Foundation
NOTICES
Meetings:
Advisory Committee for International Science and Engineering, 30029

Nuclear Regulatory Commission
NOTICES
Establishment of Atomic Safety and Licensing Board:
Entergy Nuclear Operations, Inc., 30029
Meetings:
Advisory Committee on Reactor Safeguards, 30029–30030
Monitoring the Effectiveness of Maintenance at Nuclear Power Plants, 30030–30031

Overseas Private Investment Corporation
NOTICES
Meetings; Sunshine Act, 30031

Presidential Documents
ADMINISTRATIVE ORDERS
Iraq; Continuation of National Emergency (Notice of May 18, 2012), 30181–30183

Public Debt Bureau
See Fiscal Service

Securities and Exchange Commission
NOTICES
Agency Information Collection Activities; Proposals, Submissions, and Approvals, 30031–30032
Meetings; Sunshine Act, 30032
Self-Regulatory Organizations; Proposed Rule Changes:
Fixed Income Clearing Corp., 30032–30038
NASDAQ OMX PHLX LLC, 30038–30040, 30043–30044
New York Stock Exchange LLC, 30040–30043

Social Security Administration
NOTICES
Meetings:
Occupational Information Development Advisory Panel, 30044–30045

State Department
NOTICES
Agency Information Collection Activities; Proposals, Submissions, and Approvals:
English Language Evaluation Surveys, 30045–30046
Supplemental Registration for Diversity Immigrant Visa Program, 30045

Transportation Department
See Federal Aviation Administration
See Federal Railroad Administration
See Federal Transit Administration
See Maritime Administration

Treasury Department
See Fiscal Service
RULES
Financial Research Fund:
Assessment of Fees on Large Bank Holding Companies and Nonbank Financial Companies, 29884–29895

U.S. Customs and Border Protection
NOTICES
Agency Information Collection Activities; Proposals, Submissions, and Approvals:
Application to Use the Automated Commercial Environment, 30021–30022

Veterans Affairs Department
NOTICES
Meetings:
National Academic Affiliations Council, 30050
VASRD Status Summit, A Public Overview of Proposed Disability Evaluation Criteria, 30050–30051

Separate Parts In This Issue

Part II
Transportation Department, Federal Aviation Administration, 30054–30086

Part III
Environmental Protection Agency, 30088–30171

Part IV
Justice Department, 30174–30180

Part V
Presidential Documents, 30181–30183

Reader Aids

Consult the Reader Aids section at the end of this page for phone numbers, online resources, finding aids, reminders, and notice of recently enacted public laws.

To subscribe to the Federal Register Table of Contents LISTSERV electronic mailing list, go to http://listserv.access.gpo.gov and select Online mailing list archives, FEDREGTOC-L, Join or leave the list (or change settings); then follow the instructions.

CFR PARTS AFFECTED IN THIS ISSUE

A cumulative list of the parts affected this month can be found in the Reader Aids section at the end of this issue.

9 CFR

Proposed Rules:

92 29914
93 29914
94 29914
95 29914
96 29914
98 29914

10 CFR

609 29853

14 CFR

39 (4 documents) 29855, 29857, 29861, 29863
71 (12 documents) 29865, 29866, 29867, 29868, 29869, 29870, 29871, 29872, 29873, 29874, 29875

Proposed Rules:

39 29914
43 30054
71 (5 documents) 29916, 29917, 29918, 29920, 29921
91 30054
145 30054

16 CFR

Proposed Rules:

20 29922

19 CFR

351 29875

28 CFR

35 30174
36 30174

31 CFR

150 29884

33 CFR

117 (3 documents) 29895, 29897
165 (3 documents) 29898, 29899, 29901

Proposed Rules:

117 (2 documents) 29924, 29927
165 (2 documents) 29929, 29932

40 CFR

50 30160
51 30160
52 29904
81 30088

Proposed Rules:

98 29935

49 CFR

Proposed Rules:

661 29953

50 CFR

223 29905

Proposed Rules:

660 29955
679 29961

Rules and Regulations

Federal Register
Vol. 77, No. 98
Monday, May 21, 2012

This section of the FEDERAL REGISTER contains regulatory documents having general applicability and legal effect, most of which are keyed to and codified in the Code of Federal Regulations, which is published under 50 titles pursuant to 44 U.S.C. 1510.

The Code of Federal Regulations is sold by the Superintendent of Documents. Prices of new books are listed in the first FEDERAL REGISTER issue of each week.

DEPARTMENT OF ENERGY

10 CFR Part 609

RIN 1901–AB32

Loan Guarantees for Projects That Employ Innovative Technologies

AGENCY: Loan Programs Office, Department of Energy.

ACTION: Final rule; technical amendment.

SUMMARY: The Department of Energy (DOE) is publishing this technical amendment to the regulations for the loan guarantee program authorized by Section 1703 of Title XVII of the Energy Policy Act of 2005 (Title XVII) to incorporate, without substantive change, an amendment to Section 1702(b) of Title XVII enacted by Section 305 of the Consolidated Appropriations Act, 2012.

DATES: This rule is effective May 21, 2012.

FOR FURTHER INFORMATION CONTACT: Mr. David G. Frantz, Acting Executive Director, Loan Programs Office, U.S. Department of Energy, 1000 Independence Avenue SW., Washington, DC 20585–0121. Telephone: (202) 586–8336. Email: *david.frantz@hq.doe.gov.*

SUPPLEMENTARY INFORMATION:

I. Background

Section 305 of the Consolidated Appropriations Act, 2012 amended Section 1702(b) of Title XVII by striking the existing subsection (b) and inserting instead a provision that makes clear no guarantee shall be made unless an appropriation for the cost of the guarantee has been made; the Secretary has received from the borrower a payment in full for the cost of the guarantee and deposited the payment into the Treasury; or a combination of one or more appropriations and one or more payments from the borrower has been made that is sufficient to cover the cost of the guarantee.

II. Summary of Today's Action

Today's action is a technical amendment to revise the regulations for the loan guarantee program authorized by Section 1703 of Title XVII to incorporate, without substantive change, the amendment to Section 1702(b) of Title XVII referred to above.

Pursuant to authority at 5 U.S.C. 553(b)(B), the DOE finds good cause to waive the requirement for prior notice and an opportunity for public comment on this rulemaking because such procedures would be unnecessary. As DOE is merely inserting into the Code of Federal Regulations statutory provisions already applicable to these loan guarantees and removing language inconsistent with those statutory provisions prior notice and an opportunity for public comment would serve no useful purpose. For the same reason, DOE finds good cause under 5 U.S.C. 553(d)(3) to waive the 30-day delay in effective date and make this rule effective immediately.

III. Procedural Requirements

A. Review Under Executive Order 12866, ''Regulatory Planning and Review''

Today's final rule is a ''significant regulatory action'' under section 3(f) of Executive Order 12866, ''Regulatory Planning and Review.'' 58 FR 51735 (October 4, 1993). Accordingly, today's action was subject to review by the Office of Information and Regulatory Affairs (OIRA) in the Office of Management and Budget (OMB).

B. Review Under the Regulatory Flexibility Act

The Regulatory Flexibility Act (5 U.S.C. 601 *et seq.*) requires preparation of an initial regulatory flexibility analysis for any rule that by law must be proposed for public comment, unless the agency certifies that the rule, if promulgated, will not have a significant economic impact on a substantial number of small entities. As required by Executive Order 13272, *Proper Consideration of Small Entities in Agency Rulemaking,* 67 FR 53461 (August 16, 2002), DOE published procedures and policies on February 19, 2003, to ensure that the potential impacts of its rules on small entities are properly considered during the rulemaking process. 68 FR 7990. The Department has made its procedures and policies available on the Office of General Counsel's Web site: *http://www.gc.doe.gov.* DOE today is revising the Code of Federal Regulations to incorporate, without substantive change, an amendment to Section 1702(b) of Title XVII. Because this is a technical amendment for which a general notice of proposed rulemaking is not required, the Regulatory Flexibility Act does not apply to this rulemaking.

C. Review Under the Paperwork Reduction Act of 1995

This rulemaking imposes no new information or record keeping requirements. Accordingly, Office of Management and Budget clearance is not required under the Paperwork Reduction Act. (44 U.S.C. 3501 *et seq.*)

D. Review Under the National Environmental Policy Act of 1969

DOE has determined that this rule is covered under the Categorical Exclusion found in DOE's National Environmental Policy Act regulations at paragraph A.6 of Appendix A to Subpart D, 10 CFR part 1021, which applies to rulemakings that are strictly procedural. Accordingly, neither an environmental assessment nor an environmental impact statement is required.

E. Review Under Executive Order 13132, ''Federalism''

Executive Order 13132, ''Federalism.'' 64 FR 43255 (Aug. 10, 1999) imposes certain requirements on Federal agencies formulating and implementing policies or regulations that preempt State law or that have Federalism implications. The Executive Order requires agencies to examine the constitutional and statutory authority supporting any action that would limit the policymaking discretion of the States and to carefully assess the necessity for such actions. The Executive Order also requires agencies to have an accountable process to ensure meaningful and timely input by State and local officials in the development of regulatory policies that have Federalism implications. On March 14, 2000, DOE published a statement of policy describing the intergovernmental consultation process

it will follow in the development of such regulations. 65 FR 13735. EPCA governs and prescribes Federal preemption of State regulations as to energy conservation for the products that are the subject of today's proposed rule. States can petition DOE for exemption from such preemption to the extent, and based on criteria, set forth in EPCA. (42 U.S.C. 6297) No further action is required by Executive Order 13132.

F. Review Under Executive Order 12988, ''Civil Justice Reform''

With respect to the review of existing regulations and the promulgation of new regulations, section 3(a) of Executive Order 12988, ''Civil Justice Reform,'' 61 FR 4729 (February 7, 1996), imposes on Federal agencies the general duty to adhere to the following requirements: (1) Eliminate drafting errors and ambiguity; (2) write regulations to minimize litigation; and (3) provide a clear legal standard for affected conduct rather than a general standard and promote simplification and burden reduction. Section 3(b) of Executive Order 12988 specifically requires that Executive agencies make every reasonable effort to ensure that the regulation: (1) Clearly specifies the preemptive effect, if any; (2) clearly specifies any effect on existing Federal law or regulation; (3) provides a clear legal standard for affected conduct while promoting simplification and burden reduction; (4) specifies the retroactive effect, if any; (5) adequately defines key terms; and (6) addresses other important issues affecting clarity and general draftsmanship under any guidelines issued by the Attorney General. Section 3(c) of Executive Order 12988 requires Executive agencies to review regulations in light of applicable standards in section 3(a) and section 3(b) to determine whether they are met or it is unreasonable to meet one or more of them. DOE has completed the required review and determined that, to the extent permitted by law, this final rule meets the relevant standards of Executive Order 12988.

G. Review Under the Unfunded Mandates Reform Act of 1995

Title II of the Unfunded Mandates Reform Act of 1995 (UMRA) (Pub. L. 104–4) requires each Federal agency to assess the effects of Federal regulatory actions on State, local, and Tribal governments and the private sector. For a proposed regulatory action likely to result in a rule that may cause the expenditure by State, local, and Tribal governments, in the aggregate, or by the private sector of $100 million or more in any one year (adjusted annually for inflation), section 202 of UMRA requires a Federal agency to publish a written statement that estimates the resulting costs, benefits, and other effects on the national economy. (2 U.S.C. 1532(a), (b)) The UMRA also requires a Federal agency to develop an effective process to permit timely input by elected officers of State, local, and Tribal governments on a proposed ''significant intergovernmental mandate,'' and requires an agency plan for giving notice and opportunity for timely input to potentially affected small governments before establishing any requirements that might significantly or uniquely affect small governments. On March 18, 1997, DOE published a statement of policy on its process for intergovernmental consultation under UMRA (62 FR 12820) (also available at *http://www.gc.doe.gov*). This final rule contains neither an intergovernmental mandate nor a mandate that may result in the expenditure of $100 million or more in any year, so these requirements under the UMRA do not apply.

H. Review Under the Treasury and General Government Appropriations Act, 1999

Section 654 of the Treasury and General Government Appropriations Act, 1999 (Pub. L. 105–277) requires Federal agencies to issue a Family Policymaking Assessment for any rule that may affect family well-being. This final rule would not have any impact on the autonomy or integrity of the family as an institution. Accordingly, DOE has concluded that it is not necessary to prepare a Family Policymaking Assessment.

I. Review Under Executive Order 12630, ''Governmental Actions and Interference With Constitutionally Protected Property Rights''

The Department has determined, under Executive Order 12630, ''Governmental Actions and Interference with Constitutionally Protected Property Rights,'' 53 FR 8859 (March 18, 1988), that this rule would not result in any takings which might require compensation under the Fifth Amendment to the United States Constitution.

J. Review Under the Treasury and General Government Appropriations Act, 2001

Section 515 of the Treasury and General Government Appropriations Act, 2001 (44 U.S.C. 3516, note) provides for agencies to review most disseminations of information to the public under guidelines established by each agency pursuant to general guidelines issued by OMB. OMB's guidelines were published at 67 FR 8452 (February 22, 2002), and DOE's guidelines were published at 67 FR 62446 (October 7, 2002). DOE has reviewed today's rulemaking under the OMB and DOE guidelines and has concluded that it is consistent with applicable policies in those guidelines.

K. Review Under Executive Order 13211, ''Actions Concerning Regulations That Significantly Affect Energy Supply, Distribution, or Use''

Executive Order 13211, ''Actions Concerning Regulations That Significantly Affect Energy Supply, Distribution, or Use,'' 66 FR 28355 (May 22, 2001), requires Federal agencies to prepare and submit to the Office of Information and Regulatory Affairs (OIRA), Office of Management and Budget, a Statement of Energy Effects for any proposed significant energy action. A ''significant energy action'' is defined as any action by an agency that promulgated or is expected to lead to promulgation of a final rule, and that: (1) Is a significant regulatory action under Executive Order 12866, or any successor order; and (2) is likely to have a significant adverse effect on the supply, distribution, or use of energy, or (3) is designated by the Administrator of OIRA as a significant energy action. For any proposed significant energy action, the agency must give a detailed statement of any adverse effects on energy supply, distribution, or use should the proposal be implemented, and of reasonable alternatives to the action and their expected benefits on energy supply, distribution, and use. This final rule would not have a significant adverse effect on the supply, distribution, or use of energy and, therefore, is not a significant energy action. Accordingly, DOE has not prepared a Statement of Energy Effects.

L. Congressional Notification

As required by 5 U.S.C. 801, DOE will report to Congress on the promulgation of this rule prior to its effective date. The report will state that it has been determined that the rule is not a ''major rule'' as defined by 5 U.S.C. 804(2).

IV. Approval of the Office of the Secretary

The Secretary of Energy has approved publication of today's final rule.

List of Subjects in 10 CFR Part 609

Administrative practice and procedure, Energy, Loan programs, and Reporting and recordkeeping requirements.

Issued in Washington, DC, on May 15, 2012.

David G. Frantz,

Acting Executive Director, Loan Programs Office.

For the reasons set forth in the preamble, DOE hereby amends Part 609 of chapter II of title 10 of the Code of Federal Regulations as set forth below:

PART 609—LOAN GUARANTEES FOR PROJECTS THAT EMPLOY INNOVATIVE TECHNOLOGIES

■ 1. The authority citation for part 609 continues to read as follows:

Authority: 42 U.S.C. 7254, 16511–16514.

■ 2. In § 609.8 revise paragraph (d) to read as follows:

§ 609.8 Term sheets and conditional commitments.

* * * * *

(d) DOE's obligations under each Conditional Commitment are conditional upon statutory authority having been provided in advance of the execution of the Loan Guarantee Agreement sufficient under FCRA and Title XVII for DOE to execute the Loan Guarantee Agreement, and payment in full of the Credit Subsidy Cost for the loan guarantee that is the subject of the Conditional Commitment from one of the following:

(1) A Congressional appropriation of funds;

(2) A payment from the Borrower deposited into the Treasury; or

(3) A combination of one or more appropriations under paragraph (d)(1) and one or more payments from the Borrower under paragraph (d)(2) of this section.

* * * * *

■ 3. In § 609.9 revise paragraph (d)(1) to read as follows:

§ 609.9 Closing on the Loan Guarantee Agreement.

* * * * *

(d) * * *

(1) Pursuant to section 1702(b) of the Act, DOE has received payment in full of the Credit Subsidy Cost of the loan guarantee from one of the following:

(i) A Congressional appropriation of funds;

(ii) A payment from the Borrower deposited into the Treasury; or

(iii) A combination of one or more appropriations under paragraph (d)(1)(i) and one or more payments from the Borrower under paragraph (d)(1)(ii) of this section.

* * * * *

■ 4. In § 609.10 revise paragraph (d)(17) to read as follows:

§ 609.10 Loan Guarantee Agreement.

* * * * *

(d) * * *

(17) If Borrower is to make payment in full or in part for the Credit Subsidy Cost of the loan guarantee pursuant to section 1702(b)(2) of the Act, such payment must be received by DOE prior to, or at the time of, closing;

* * * * *

[FR Doc. 2012–12218 Filed 5–18–12; 8:45 am]

BILLING CODE 6450–01–P

DEPARTMENT OF TRANSPORTATION

Federal Aviation Administration

14 CFR Part 39

[Docket No. FAA–2012–0184; Directorate Identifier 2011–NM–118–AD; Amendment 39–17055; AD 2012–10–06]

RIN 2120–AA64

Airworthiness Directives; Saab AB, Saab Aerosystems Airplanes

AGENCY: Federal Aviation Administration (FAA), Department of Transportation (DOT).

ACTION: Final rule.

SUMMARY: We are adopting a new airworthiness directive (AD) for all Saab AB, Saab Aerosystems Model SAAB 2000 airplanes. This AD was prompted by reports that environmentally friendly de-icing agents used on certain electrical connectors and braids could cause corrosion damage. This AD requires performing, in certain locations, a detailed inspection for corrosion of the electrical and electronics installation, and if corrosion is found repairing each affected harness braid or replacing each affected component and/or wiring harness. We are issuing this AD to detect and correct corrosion of critical system wiring, which could result in arcing and, in combination with other factors, a fire and consequent damage to the airplane.

DATES: This AD becomes effective June 25, 2012.

The Director of the Federal Register approved the incorporation by reference of certain publications listed in this AD as of June 25, 2012.

ADDRESSES: You may examine the AD docket on the Internet at *http://www.regulations.gov* or in person at the U.S. Department of Transportation, Docket Operations, M–30, West Building Ground Floor, Room W12–140, 1200 New Jersey Avenue SE., Washington, DC.

FOR FURTHER INFORMATION CONTACT: Shahram Daneshmandi, Aerospace Engineer, International Branch, ANM–116, Transport Airplane Directorate, FAA, 1601 Lind Avenue SW., Renton, Washington 98057–3356; telephone (425) 227–1112; fax (425) 227–1149.

SUPPLEMENTARY INFORMATION:

Discussion

We issued a notice of proposed rulemaking (NPRM) to amend 14 CFR part 39 to include an AD that would apply to the specified products. That NPRM was published in the **Federal Register** on February 28, 2012 (77 FR 11791). That NPRM proposed to correct an unsafe condition for the specified products. The MCAI states:

> Environmentally friendly de-/anti-icing agents (acetates or formats) are a known cause of corrosion damage to components of the Electrical Wiring Interconnection System (EWIS) on aeroplanes.
>
> Investigations by SAAB have identified certain electrical connectors and braids which are susceptible to such damage, in zones 191 and 192 of the center wing fuselage and in zones 323, 332 and 342, affecting the wiring harnesses of elevator and rudder servos.
>
> This condition, if not detected and corrected, could lead to damage of critical system wiring, possibly resulting in arcing and, in combination with other factors, a fire and consequent damage to, or loss of, the aeroplane.
>
> To address this unsafe condition, SAAB have issued Service Bulletin (SB) 2000–92–005 and SB 2000–92–006 to provide instructions to detect unacceptable corrosion on electrical and electronic installation wiring.
>
> For the reasons described above, this [EASA] AD requires a one-time [detailed] inspection of the affected components in the designated area, the reporting of all inspections results to SAAB and, depending on findings, appropriate corrective action [repair or replacement].

You may obtain further information by examining the MCAI in the AD docket.

Comments

We gave the public the opportunity to participate in developing this AD. We received no comments on the NPRM (77 FR 11791, February 28, 2012) or on the determination of the cost to the public.

Conclusion

We reviewed the available data and determined that air safety and the public interest require adopting the AD as proposed.

Costs of Compliance

We estimate that this AD will affect 10 products of U.S. registry. We also estimate that it will take about 360 work-hours per product to comply with the basic requirements of this AD. The average labor rate is $85 per work-hour.

Based on these figures, we estimate the cost of this AD to the U.S. operators to be $306,000, or $30,600 per product.

In addition, we estimate that any necessary follow-on actions would take about 40 work-hours and require parts costing $12,454, for a cost of $15,854 per product. We have no way of determining the number of products that may need these actions.

Authority for This Rulemaking

Title 49 of the United States Code specifies the FAA's authority to issue rules on aviation safety. Subtitle I, section 106, describes the authority of the FAA Administrator. ''Subtitle VII: Aviation Programs,'' describes in more detail the scope of the Agency's authority.

We are issuing this rulemaking under the authority described in ''Subtitle VII, Part A, Subpart III, Section 44701: General requirements.'' Under that section, Congress charges the FAA with promoting safe flight of civil aircraft in air commerce by prescribing regulations for practices, methods, and procedures the Administrator finds necessary for safety in air commerce. This regulation is within the scope of that authority because it addresses an unsafe condition that is likely to exist or develop on products identified in this rulemaking action.

Regulatory Findings

We determined that this AD will not have federalism implications under Executive Order 13132. This AD will not have a substantial direct effect on the States, on the relationship between the national government and the States, or on the distribution of power and responsibilities among the various levels of government.

For the reasons discussed above, I certify that this AD:

1. Is not a ''significant regulatory action'' under Executive Order 12866;
2. Is not a ''significant rule'' under the DOT Regulatory Policies and Procedures (44 FR 11034, February 26, 1979);
3. Will not affect intrastate aviation in Alaska; and
4. Will not have a significant economic impact, positive or negative, on a substantial number of small entities under the criteria of the Regulatory Flexibility Act.

We prepared a regulatory evaluation of the estimated costs to comply with this AD and placed it in the AD docket.

Examining the AD Docket

You may examine the AD docket on the Internet at *http://www.regulations.gov;* or in person at the Docket Operations office between 9 a.m. and 5 p.m., Monday through Friday, except Federal holidays. The AD docket contains the NPRM (77 FR 11791, February 28, 2012), the regulatory evaluation, any comments received, and other information. The street address for the Docket Operations office (telephone (800) 647–5527) is in the **ADDRESSES** section. Comments will be available in the AD docket shortly after receipt.

List of Subjects in 14 CFR Part 39

Air transportation, Aircraft, Aviation safety, Incorporation by reference, Safety.

Adoption of the Amendment

Accordingly, under the authority delegated to me by the Administrator, the FAA amends 14 CFR part 39 as follows:

PART 39—AIRWORTHINESS DIRECTIVES

■ 1. The authority citation for part 39 continues to read as follows:

Authority: 49 U.S.C. 106(g), 40113, 44701.

§ 39.13 [Amended]

■ 2. The FAA amends § 39.13 by adding the following new AD:

2012–10–06 Saab AB, Saab Aerosystems: Amendment 39–17055. Docket No. FAA–2012–0184; Directorate Identifier 2011–NM–118–AD.

(a) Effective Date

This airworthiness directive (AD) becomes effective June 25, 2012.

(b) Affected ADs

None.

(c) Applicability

This AD applies to all Saab AB, Saab Aerosystems Model SAAB 2000 airplanes; certificated in any category.

(d) Subject

Air Transport Association (ATA) of America Code 92.

(e) Reason

This AD was prompted by reports that environmentally friendly de-icing agents used on certain electrical connectors and braids could cause corrosion damage. We are issuing this AD to detect and correct corrosion of critical system wiring, which could result in arcing and, in combination with other factors, a fire and consequent damage to the airplane.

(f) Compliance

You are responsible for having the actions required by this AD performed within the compliance times specified, unless the actions have already been done.

(g) Inspection

Within 24 months after the effective date of this AD, do a detailed inspection for corrosion of the electrical and electronics installation, at the locations specified in and in accordance with the Accomplishment Instructions of SAAB Service Bulletin 2000–92–005, Revision 01, dated March 1, 2011; and SAAB Service Bulletin 2000–92–006, Revision 01, dated August 18, 2010. These inspections do not need to be accomplished concurrently.

(h) Corrective Action

If any corrosion is found during any inspection required in paragraph (g) of this AD: Before next flight, repair each affected harness braid or replace each affected component and/or wiring harness, as applicable, in accordance with the Accomplishment Instructions of SAAB Service Bulletin 2000–92–005, Revision 01, dated March 1, 2011; and SAAB Service Bulletin 2000–92–006, Revision 01, dated August 18, 2010.

(i) Credit for Previous Actions

This paragraph provides credit for the actions required by paragraphs (g) and (h) of this AD, if those actions were performed before the effective date of this AD using SAAB Service Bulletin 2000–92–005, dated May 5, 2010; and SAAB Service Bulletin 2000–92–006, dated March 29, 2010.

(j) Reporting Requirement

Submit a report of the findings (both positive and negative) of the inspection required by paragraph (g) of this AD, using the Feedback Form in SAAB Service Bulletin 2000–92–005, Revision 01, dated March 1, 2011; and SAAB Service Bulletin 2000–92–006, Revision 01, dated August 18, 2010. Send the report to SAAB Aerotech, Support Services Division, SE–581 88 Linkoping, Sweden; fax +46 13 18 4874; email *saab2000.techsupport@saabgroup.com;* at the applicable time specified in paragraph (i)(1) or (i)(2) of this AD. The report must include the level of corrosion found on each connector.

(1) If the inspection was done on or after the effective date of this AD: Submit the report within 30 days after the inspection.

(2) If the inspection was done before the effective date of this AD: Submit the report within 30 days after the effective date of this AD.

(k) Other FAA AD Provisions

The following provisions also apply to this AD:

(1) *Alternative Methods of Compliance (AMOCs):* The Manager, International Branch, ANM–116, FAA, has the authority to approve AMOCs for this AD, if requested using the procedures found in 14 CFR 39.19. In accordance with 14 CFR 39.19, send your request to your principal inspector or local Flight Standards District Office, as appropriate. If sending information directly to the International Branch, send it to ATTN: Shahram Daneshmandi, Aerospace Engineer, International Branch, ANM–116, Transport Airplane Directorate, FAA, 1601 Lind Avenue SW., Renton, Washington 98057–3356; telephone (425) 227–1112; fax (425) 227–1149. Information may be emailed to: *9-ANM-116-AMOC-REQUESTS@faa.gov.* Before using any approved AMOC, notify

your appropriate principal inspector, or lacking a principal inspector, the manager of the local flight standards district office/ certificate holding district office. The AMOC approval letter must specifically reference this AD.

(2) *Airworthy Product:* For any requirement in this AD to obtain corrective actions from a manufacturer or other source, use these actions if they are FAA-approved. Corrective actions are considered FAA-approved if they are approved by the State of Design Authority (or their delegated agent). You are required to assure the product is airworthy before it is returned to service.

(3) *Reporting Requirements:* A federal agency may not conduct or sponsor, and a person is not required to respond to, nor shall a person be subject to a penalty for failure to comply with a collection of information subject to the requirements of the Paperwork Reduction Act unless that collection of information displays a current valid OMB Control Number. The OMB Control Number for this information collection is 2120–0056. Public reporting for this collection of information is estimated to be approximately 5 minutes per response, including the time for reviewing instructions, completing and reviewing the collection of information. All responses to this collection of information are mandatory. Comments concerning the accuracy of this burden and suggestions for reducing the burden should be directed to the FAA at: 800 Independence Ave. SW., Washington, DC 20591, Attn: Information Collection Clearance Officer, AES–200.

(l) Related Information

Refer to MCAI EASA Airworthiness Directive 2011–0079, dated May 5, 2011, and the service information specified in paragraphs (l)(1) and (l)(2) of this AD, for related information.

(1) SAAB Service Bulletin 2000–92–005, Revision 01, dated March 1, 2011.

(2) SAAB Service Bulletin 2000–92–006, Revision 01, dated August 18, 2010.

(m) Material Incorporated by Reference

(1) The Director of the Federal Register approved the incorporation by reference (IBR) of the following service information under 5 U.S.C. 552(a) and 1 CFR part 51.

(2) You must use the following service information to do the actions required by this AD, unless the AD specifies otherwise.

(i) SAAB Service Bulletin 2000–92–005, Revision 01, dated March 1, 2011.

(ii) SAAB Service Bulletin 2000–92–006, Revision 01, dated August 18, 2010.

(3) For Saab AB, Saab Aerosystems service information identified in this AD, contact Saab AB, Saab Aerosystems, SE–581 88, Linköping, Sweden; telephone +46 13 18 5591; fax +46 13 18 4874; email *saab2000.techsupport@saabgroup.com;* Internet *http://www.saabgroup.com.*

(4) You may review copies of the service information at the FAA, Transport Airplane Directorate, 1601 Lind Avenue SW., Renton, Washington. For information on the availability of this material at the FAA, call 425–227–1221.

(5) You may also review copies of the service information that is incorporated by reference at the National Archives and Records Administration (NARA). For information on the availability of this material at an NARA facility, call 202–741–6030, or go to *http://www.archives.gov/federal_register/code_of_federal_regulations/ibr_locations.html.*

Issued in Renton, Washington, on May 9, 2012.

Michael Kaszycki,

Acting Manager, Transport Airplane Directorate, Aircraft Certification Service.

[FR Doc. 2012–11957 Filed 5–18–12; 8:45 am]

BILLING CODE 4910–13–P

DEPARTMENT OF TRANSPORTATION

Federal Aviation Administration

14 CFR Part 39

[Docket No. FAA–2011–0645; Directorate Identifier 2010–NM–009–AD; Amendment 39–17052; AD 2012–10–03]

RIN 2120–AA64

Airworthiness Directives; The Boeing Company Airplanes

AGENCY: Federal Aviation Administration (FAA), DOT.

ACTION: Final rule.

SUMMARY: We are superseding an existing airworthiness directive (AD) for certain The Boeing Company Model 747 series airplanes. That AD currently requires repetitive inspections for cracks of the fuselage skin lap splice between body station (BS) 400 and BS 520 at stringers S–6L and S–6R, and repair if necessary. This new AD shortens the interval for the repetitive inspections, requires modification for certain airplanes, and requires certain post-modification inspections for other airplanes. This AD was prompted by reports of multiple adjacent cracks on an airplane, and a recent fleet-wide evaluation of widespread fatigue damage of skin lap joints, which indicated the need for revised procedures and reduced compliance times. We are issuing this AD to detect and correct cracking of the fuselage skin lap splice between BS 400 and BS 520 at stringers S–6L and S–6R, which could result in sudden loss of cabin pressurization and the inability of the fuselage to withstand fail-safe loads.

DATES: This AD is effective June 25, 2012.

The Director of the Federal Register approved the incorporation by reference of certain publications listed in the AD as of June 25, 2012.

ADDRESSES: For service information identified in this AD, contact Boeing Commercial Airplanes, Attention: Data & Services Management, P.O. Box 3707, MC 2H–65, Seattle, Washington 98124–2207; telephone 206–544–5000, extension 1; fax 206–766–5680; email *me.boecom@boeing.com;* Internet *https://www.myboeingfleet.com.* You may review copies of the referenced service information at the FAA, Transport Airplane Directorate, 1601 Lind Avenue SW., Renton, Washington. For information on the availability of this material at the FAA, call 425–227–1221.

Examining the AD Docket

You may examine the AD docket on the Internet at *http://www.regulations.gov;* or in person at the Docket Management Facility between 9 a.m. and 5 p.m., Monday through Friday, except Federal holidays. The AD docket contains this AD, the regulatory evaluation, any comments received, and other information. The address for the Docket Office (phone: 800–647–5527) is Document Management Facility, U.S. Department of Transportation, Docket Operations, M–30, West Building Ground Floor, Room W12–140, 1200 New Jersey Avenue SE., Washington, DC 20590.

FOR FURTHER INFORMATION CONTACT: Bill Ashforth, Aerospace Engineer, Airframe Branch, ANM–120S, FAA, Seattle Aircraft Certification Office (ACO), 1601 Lind Avenue SW., Renton, Washington 98057–3356; phone: 425–917–6432; fax: 425–917–6590; email: *bill.ashforth@faa.gov.*

SUPPLEMENTARY INFORMATION:

Discussion

We issued a notice of proposed rulemaking (NPRM) to amend 14 CFR part 39 to supersede AD 90–21–17, Amendment 39–6768 (55 FR 41510, October 12, 1990). That AD applies to the specified products. The NPRM was published in the **Federal Register** on June 29, 2011 (76 FR 38074). That NPRM proposed to continue to require repetitive inspections for cracks of the fuselage skin lap splice between body station (BS) 400 and BS 520 at stringers S–6L and S–6R, and repair if necessary; and added modification for certain airplanes and certain post-modification inspections for other airplanes.

Comments

We gave the public the opportunity to participate in developing this AD. The following presents the comments received on the proposal (76 FR 38074, June 29, 2011) and the FAA's response to each comment.

Request To Remove Conflicting Requirement

Boeing stated that certain compliance times conflict in the proposed AD (76 FR 38074, June 29, 2011). To resolve the conflict, Boeing requested that we remove paragraph (k) from the proposed AD. (Paragraph (k) was retained from AD 90–21–17, Amendment 39–6768 (55 FR 41510, October 12, 1990).) The initial compliance time for the inspections specified in paragraphs (k), (l), and (m) of the proposed AD is 10,000 flight cycles after certain modifications have been done. Boeing noted that the repetitive interval is 5,000 flight cycles for paragraph (k) of the proposed AD—but Boeing Service Bulletin 747–53A2303, Revision 2, dated October 1, 2009, specifies 500 flight cycles for paragraphs (l) and (m) of the proposed AD. Boeing stated that the preventive modifications include the protruding head fastener modification and the external reinforcement doubler installation (which does not cut the lap).

We partially agree with the request. We agree that, as written, the compliance times specified in paragraphs (l) and (m) of the proposed AD (76 FR 38074, June 29, 2011) would have conflicted with the compliance time specified in paragraph (k) in the proposed AD, as described by the commenter. But, for airplanes nearing the 5,000-flight-cycle repetitive interval specified in paragraph (k) of the AD on the new effective date, removing paragraph (k) from the AD would allow an unwarranted extension of time to comply, and could compromise the continued safe operation of those airplanes. We have therefore retained paragraph (k) in this AD. We have further determined that, once the applicable inspections specified in paragraph (l) or (m) of the AD have been initiated, the actions in paragraph (k) are no longer necessary. To avoid the conflict described by the commenter, we have revised paragraphs (l) and (m) of this AD to state that their accomplishment terminates the requirements of paragraph (k) of this AD.

Request To Revise Modification Requirements

Boeing requested that we revise paragraph (n) of the proposed AD (76 FR 38074, June 29, 2011) to specify separate requirements for the two groups of affected airplanes, so that the proposed AD agrees with the actions specified in Table 2 of paragraph 1.E., ''Compliance,'' of Boeing Service Bulletin 747–53A2303, Revision 2, dated October 1, 2009.

One group affected by paragraph (n) of the proposed AD (76 FR 38074, June 29, 2011) is airplanes on which no previous modification or repair has been installed in the affected area. For those airplanes, Boeing requested that we require a structural modification in accordance with Part 3 of Boeing Service Bulletin 747–53A2303, Revision 2, dated October 1, 2009, within the compliance time specified in paragraph A. of AD 90–06–06, Amendment 39–6490 (55 FR 8374, March 7, 1990).

(AD 90–06–06, Amendment 39–6490 (55 FR 8374, March 7, 1990), applies to certain Boeing Model 747 series airplanes and requires structural modifications in accordance with Boeing Document D6–35999, dated March 31, 1989. That document in turn refers to Boeing Alert Service Bulletin 747–53A2303, dated June 2, 1988, as another source of guidance for doing that modification.)

Boeing requested no change for the remaining airplanes identified in paragraph (n) of the proposed AD (76 FR 38074, June 29, 2011).

We partially agree. For the referenced airplanes, this same modification is one of the requirements of AD 90–06–06, Amendment 39–6490 (55 FR 8374, March 7, 1990). The compliance time for this modification is 23,000 total accumulated flight cycles, or within 4 years after the effective date (April 17, 1990), whichever occurs later. To clarify the ADs' requirements, we have removed those airplanes from paragraph (n) of the NPRM (76 FR 38074, June 29, 2011) and added a new paragraph (o) in this AD, which explains that, for those airplanes, accomplishment of the referenced modification satisfies the corresponding requirement for AD 90–06–06, but post-modification inspections are required. We have re-identified subsequent paragraphs in this AD accordingly.

Request To Refer to Service Information for Compliance Data

Boeing requested that the FAA review the compliance data in the proposed AD (76 FR 38074, June 29, 2011). Boeing noted that the proposed AD repeated all the compliance data as stated in Boeing Service Bulletin 747–53A2303, Revision 2, dated October 1, 2009. Boeing requested that we refer to the compliance table in this service bulletin as the source of all compliance data, except as noted.

Referring to paragraph 1.E., ''Compliance,'' of a service bulletin may be an efficient way to convey compliance time information in an AD, if the compliance times are complex or numerous. But specifying simpler compliance times within an AD—as in paragraphs (l), (m), and (n) in this AD—is also acceptable and enforceable. For requirements retained from a superseded AD—as in paragraphs (g) through (k) in this AD—we routinely restate the existing language from the AD that is being superseded, including the text describing the compliance times. We have not changed this AD regarding this issue.

Explanation of Additional Changes to This AD

The information in Note 1 of the proposed AD (76 FR 38074, June 29, 2011) has been moved to a new paragraph (g)(4) in this AD.

As explained in the proposed AD (76 FR 38074, June 29, 2011), paragraph (p) in the proposed AD (paragraph (q) in this final rule) was revised to add delegation of authority to Boeing Commercial Airplanes Organization Designation Authorization (ODA) to approve an alternative method of compliance for any repair required by this AD. We have also changed paragraph (k) of this AD to reflect this change.

Conclusion

We reviewed the relevant data, considered the comments received, and determined that air safety and the public interest require adopting the AD with the changes described previously and minor editorial changes. We have determined that these minor changes:

- Are consistent with the intent that was proposed in the NPRM (76 FR 38074, June 29, 2011) for correcting the unsafe condition; and
- Do not add any additional burden upon the public than was already proposed in the NPRM (76 FR 38074, June 29, 2011).

We also determined that these changes will not increase the economic burden on any operator or increase the scope of the AD.

Costs of Compliance

There are about 165 airplanes of the affected design in the worldwide fleet; of these, 64 are U.S.-registered airplanes. The following table provides the estimated costs for U.S. operators to comply with this AD.

ESTIMATED COSTS

Action	Work hours	Average labor rate per hour	Parts	Cost per airplane	Fleet cost
Inspection (required by AD 90–21–17, Amendment 39–6768 (55 FR 41510, October 12, 1990).	8	$85	$0	$680 per inspection cycle.	$43,520 per inspection cycle.
Modification (new action)	Up to 370	85	Between $954 and $2,064.	Up to $33,514	Up to $2,144,896.

We have received no definitive data that would enable us to provide cost estimates for the on-condition actions specified in this AD.

Authority for This Rulemaking

Title 49 of the United States Code specifies the FAA's authority to issue rules on aviation safety. Subtitle I, Section 106, describes the authority of the FAA Administrator. Subtitle VII, Aviation Programs, describes in more detail the scope of the Agency's authority.

We are issuing this rulemaking under the authority described in Subtitle VII, Part A, Subpart III, Section 44701, ''General requirements.'' Under that section, Congress charges the FAA with promoting safe flight of civil aircraft in air commerce by prescribing regulations for practices, methods, and procedures the Administrator finds necessary for safety in air commerce. This regulation is within the scope of that authority because it addresses an unsafe condition that is likely to exist or develop on products identified in this rulemaking action.

Regulatory Findings

We have determined that this AD will not have federalism implications under Executive Order 13132. This AD will not have a substantial direct effect on the States, on the relationship between the national government and the States, or on the distribution of power and responsibilities among the various levels of government.

For the reasons discussed above, I certify that this AD:

(1) Is not a ''significant regulatory action'' under Executive Order 12866,

(2) Is not a ''significant rule'' under DOT Regulatory Policies and Procedures (44 FR 11034, February 26, 1979),

(3) Will not affect intrastate aviation in Alaska, and

(4) Will not have a significant economic impact, positive or negative, on a substantial number of small entities under the criteria of the Regulatory Flexibility Act.

List of Subjects in 14 CFR Part 39

Air transportation, Aircraft, Aviation safety, Incorporation by reference, Safety.

Adoption of the Amendment

Accordingly, under the authority delegated to me by the Administrator, the FAA amends 14 CFR part 39 as follows:

PART 39—AIRWORTHINESS DIRECTIVES

■ 1. The authority citation for part 39 continues to read as follows:

Authority: 49 U.S.C. 106(g), 40113, 44701.

§ 39.13 [Amended]

■ 2. The FAA amends § 39.13 by removing airworthiness directive (AD) 90–21–17, Amendment 39–6768 (55 FR 41510, October 12, 1990), and adding the following new AD:

2012–10–03 The Boeing Company: Amendment 39–17052; Docket No. FAA–2011–0645; Directorate Identifier 2010–NM–009–AD.

(a) Effective Date

This airworthiness directive (AD) is effective June 25, 2012.

(b) Affected ADs

This AD supersedes AD 90–21–17, Amendment 39–6768 (55 FR 41510, October 12, 1990).

(c) Applicability

This AD applies to The Boeing Company Model 747–100, 747–100B, 747–200B, 747–200C, 747–200F, 747–300, 747SR, and 747SP series airplanes, certificated in any category, as identified in Boeing Service Bulletin 747–53A2303, Revision 2, dated October 1, 2009.

(d) Subject

Joint Aircraft System Component (JASC)/ Air Transport Association (ATA) of America Code 53, Fuselage.

(e) Unsafe Condition

This AD was prompted by from reports of multiple adjacent cracks on an airplane, and a recent fleet-wide evaluation of widespread fatigue damage of skin lap joints, which indicated the need for revised procedures and reduced compliance times. The Federal Aviation Administration is issuing this AD to detect and correct cracking of the fuselage skin lap splice between body station (BS) 400 and BS 520, at stringers S–6L and S–6R. Such cracking could result in sudden loss of cabin pressurization and the inability of the fuselage to withstand fail-safe loads.

(f) Compliance

You are responsible for having the actions required by this AD performed within the compliance times specified, unless the actions have already been done.

(g) Retained Inspections

This paragraph restates the requirements of paragraph A. of AD 90–21–17, Amendment 39–6768 (55 FR 41510, October 12, 1990), with revised service information, reduced inspection interval, and added subparagraph. Conduct a close visual or detailed inspection, and a high frequency eddy current (HFEC) inspection, of the fuselage skin lap splice between BS 400 and BS 520, at stringers S–6L and S–6R, for cracking, in accordance with Boeing Alert Service Bulletin 747–53A2303, dated June 2, 1988, or Revision 1, dated March 29, 1990; or Boeing Service Bulletin 747–53A2303, Revision 2, dated October 1, 2009; at the times specified in paragraph (g)(1), (g)(2), or (g)(3) of this AD. After the effective date of this AD, only Boeing Service Bulletin 747–53A2303, Revision 2, dated October 1, 2009, may be used. Adequate lighting must be used for this inspection. The eddy current inspections may be conducted without removal of the paint, provided the paint does not interfere with the inspections. Paint must be removed, using an approved chemical stripper, in any situation where the inspector determines that the paint is interfering with the proper functioning of the inspection instrument.

(1) Within the next 100 landings after March 31, 1989 (the effective date of AD 89–05–03, Amendment 39–6146 (54 FR 7397, February 21, 1989), which was superseded by AD 90–21–17, Amendment 39–6768 (55 FR 41510, October 12, 1990)), for airplanes that have accumulated 16,000 or more landings as of March 31, 1989, unless previously accomplished within the last 4,900 landings.

(2) Within the next 1,000 landings after March 31, 1989, or prior to the accumulation of 16,000 landings, whichever occurs first, for airplanes that have accumulated between 12,000 and 16,000 landings, as of March 31, 1989 (the effective date of AD 89–05–03, Amendment 39–6146 (54 FR 7397, February 21, 1989), which was superseded by AD 90–21–17, Amendment 39–6768 (55 FR 41510, October 12, 1990)), unless previously accomplished within the last 4,000 landings.

(3) Prior to the accumulation of 13,000 landings for airplanes that have accumulated 12,000 or fewer landings as of March 31, 1989 (the effective date of AD 89–05–03,

Amendment 39–6146 (54 FR 7397, February 21, 1989), which was superseded by AD 90–21–17, Amendment 39–6768 (55 FR 41510, October 12, 1990)), unless previously accomplished within the last 5,000 landings.

(4) For the purposes of this AD, a detailed inspection is: ''An intensive examination of a specific item, installation, or assembly to detect damage, failure, or irregularity. Available lighting is normally supplemented with a direct source of good lighting at an intensity deemed appropriate. Inspection aids such as mirror, magnifying lenses, etc., may be necessary. Surface cleaning and elaborate procedures may be required.''

(h) Retained Inspection Compliance Time for SUD-Modified Airplanes

This paragraph restates the requirements of paragraph B. of AD 90–21–17, Amendment 39–6768 (55 FR 41510, October 12, 1990), with revised service information. On airplanes which have been modified to the stretched-upper-deck configuration, as identified in Boeing Alert Service Bulletin 747–53A2303, dated June 2, 1988, or Revision 1, dated March 29, 1990; or Boeing Service Bulletin 747–53A2303, Revision 2, dated October 1, 2009; the accumulated landing threshold for compliance with paragraph (g) of this AD is measured from the time of the stretched-upper-deck modification.

(i) Retained Repetitive Inspections

This paragraph restates the requirements of paragraph C. of AD 90–21–17, Amendment 39–6768 (55 FR 41510, October 12, 1990), with revised service information. If no cracking is detected during the inspections required by paragraph (g) of this AD, repeat the inspections required by paragraph (g) of this AD one time at the earlier of the times specified in paragraphs (i)(1) and (i)(2) of this AD. Thereafter repeat the inspections at intervals not to exceed 3,000 landings.

(1) Within 5,000 landings after the last inspection.

(2) Within 3,000 landings after the last inspection, or within 1,000 landings after the effective date of this AD, whichever occurs later.

(j) Retained Repair

This paragraph restates the requirements of paragraph D. of AD 90–21–17, Amendment 39–6768 (55 FR 41510, October 12, 1990), with revised service information. If cracks are detected during the inspections required by paragraph (g) of this AD, accomplish the repair or preventive modification of the affected lap splice, in accordance with Boeing Alert Service Bulletin 747–53A2303, dated June 2, 1988, or Revision 1, dated March 29, 1990; or Boeing Service Bulletin 747–53A2303, Revision 2, dated October 1, 2009; prior to further pressurized flight. After the effective date of this AD, only Boeing Service Bulletin747–53A2303, Revision 2, dated October 1, 2009, may be used. If cracks are repaired in local areas without accomplishing preventive modification of the entire affected lap area, continue inspections of the unmodified and unrepaired areas of the affected lap splice in accordance with paragraph (i) of this AD.

(k) Retained Inspection Compliance Time for Airplanes With Preventive Modification

This paragraph restates the requirements of paragraph E. of AD 90–21–17, Amendment 39–6768 (55 FR 41510, October 12, 1990), with revised service information. For airplanes incorporating the preventive modification, as described in Boeing Alert Service Bulletin 747–53A2303, dated June 2, 1988, or Revision 1, dated March 29, 1990; or Boeing Service Bulletin 747–53A2303, Revision 2, dated October 1, 2009; accomplish the inspections required by paragraph (g) of this AD prior to the accumulation of 10,000 landings after the modification and thereafter at intervals not to exceed 5,000 landings. If cracks are found, repair using a method approved in accordance with the procedures specified in paragraph (q) of this AD, prior to further pressurized flight.

(l) New Requirement of This AD: Post-Modification Inspections

For airplanes on which a protruding head fastener modification has been done in accordance with Boeing Alert Service Bulletin 747–53A2303, dated June 2, 1988, or Revision 1, dated March 29, 1990: Within 10,000 flight cycles after modification, or within 500 flight cycles after the effective date of this AD, whichever occurs later, do an external HFEC inspection for cracking in the skin around the fasteners in the upper row of the lap joint, in accordance with Part 5 of the Accomplishment Instructions of Boeing Service Bulletin 747–53A2303, Revision 2, dated October 1, 2009. If any crack is found, before further flight repair in accordance with Boeing Service Bulletin 747–53A2303, Revision 2, dated October 1, 2009 (except as required by paragraph (p) of this AD), or do the modification specified in paragraph (n) of this AD. Repeat the inspection in affected uncracked areas at intervals not to exceed 500 flight cycles, until the modification specified in paragraph (n) of this AD is done. Accomplishment of the initial inspection and all applicable corrective actions specified in this paragraph terminates the requirements of paragraph (k) of this AD.

(m) New Requirement of This AD: Internal HFEC Inspection

For airplanes on which an external doubler repair has been installed as a modification that was done using a method other than that specified in Boeing 747 structural repair manual (SRM) 53–30–03, Figure 19, 25, 28 or 34: Within 10,000 flight cycles after modification, or within 500 flight cycles after the effective date of this AD, whichever occurs later, do an internal HFEC inspection for cracking in the skin around the fasteners in the upper row of the lap joint, in accordance with Part 5 of the Accomplishment Instructions of Boeing Service Bulletin 747–53A2303, Revision 2, dated October 1, 2009. If any crack is found, before further flight repair in accordance with Boeing Service Bulletin 747–53A2303, Revision 2, dated October 1, 2009 (except as required by paragraph (p) of this AD), or do the modification specified in paragraph (n) of this AD. Repeat the inspection in affected uncracked areas at intervals not to exceed 500 flight cycles, until the modification specified in paragraph (n) of this AD is done. Accomplishment of the initial inspection and all applicable corrective actions specified in this paragraph terminates the requirements of paragraph (k) of this AD.

(n) New Requirement of This AD: External Doubler Modification

For airplanes on which a protruding head fastener modification or a Boeing 747 SRM 53–30–03 repair or modification has been installed that was not done using Boeing 747 SRM 53–30–03, Figure 19, 25, 28, or 34, for the full length of the lap splice: Within 14,000 flight cycles after the first repair or modification was done, or within 3,000 flight cycles after the effective date of this AD, whichever occurs later, modify the skin and do all post-modification inspections and repairs, in accordance with Part 3 of the Accomplishment Instructions of Boeing Service Bulletin 747–53A2303, Revision 2, dated October 1, 2009, except as required by paragraph (o) of this AD. Do the post-modification inspection within 10,000 flight cycles after installation of the modification. Repeat the inspection thereafter at intervals not to exceed 3,000 flight cycles. All applicable repairs must be done before further flight.

(o) Structural Modification

The provisions of paragraphs (o)(1) and (o)(2) of this AD apply to airplanes on which no previous modification or repair has been installed in the affected area.

(1) Accomplishment of the structural modification specified in Part 3 of the Accomplishment Instructions of Boeing Service Bulletin 747–53A2303, Revision 2, dated October 1, 2009, satisfies the requirements of AD 90–06–06, Amendment 39–6490 (55 FR 8374, March 7, 1990), for only the corresponding modification specified in Boeing Alert Service Bulletin 747–53A2303, dated June 2, 1988, and Revision 1, dated March 29, 1990; and Boeing Service Bulletin 747–53A2303, Revision 2, dated October 1, 2009.

(2) After accomplishment of the modification specified in paragraph (o)(1) of this AD, the applicable requirements and compliance times of paragraphs (l) and (m) of this AD apply.

(p) Exception to Service Bulletin Specification

Where Boeing Service Bulletin 747–53A2303, Revision 2, dated October 1, 2009, specifies to contact Boeing for appropriate action: Before further flight, repair using a method approved in accordance with the procedures specified in paragraph (q) of this AD.

(q) Alternative Methods of Compliance (AMOCs)

(1) The Manager, Seattle Aircraft Certification Office (ACO), FAA, has the authority to approve AMOCs for this AD, if requested using the procedures found in 14 CFR 39.19. In accordance with 14 CFR 39.19, send your request to your principal inspector or local Flight Standards District Office, as appropriate. If sending information directly

to the manager of the ACO, send it to the attention of the person identified in the Related Information section of this AD. Information may be emailed to: *9-ANM-Seattle-ACO-AMOC-Requests@faa.gov.*

(2) Before using any approved AMOC, notify your appropriate principal inspector, or lacking a principal inspector, the manager of the local flight standards district office/ certificate holding district office.

(3) An AMOC that provides an acceptable level of safety may be used for any repair required by this AD if it is approved by the Boeing Commercial Airplanes Organization Designation Authorization (ODA) or other person who has been authorized by the Manager, Seattle ACO, to make those findings. For a repair method to be approved, the repair must meet the certification basis of the airplane, and the approval must specifically refer to this AD.

(4) AMOCs approved previously in accordance with AD 90–21–17, Amendment 39–6768 (55 FR 41510, October 12, 1990), are approved as AMOCs for the corresponding provisions of paragraphs (g) and (i) of this AD. AMOCs approved previously in accordance with AD 90–21–17, Amendment 39–6768 (55 FR 41510, October 12, 1990), are approved as AMOCs for the corresponding provisions of paragraphs (j) and (n) of this AD only if the repair or preventive modification of the affected lap splice was done in accordance with Boeing Service Bulletin 747–53A2303, Revision 2, dated October 1, 2009, including Boeing Designated Engineering Representative (DER) or Airworthiness Representative (AR) approvals of deviations to Boeing Service Bulletin 747–53A2303, Revision 2, dated October 1, 2009.

(r) Related Information

For more information about this AD, contact Bill Ashforth, Aerospace Engineer, Airframe Branch, ANM–120S, FAA, Seattle Aircraft Certification Office (ACO), 1601 Lind Avenue SW., Renton, Washington 98057–3356; telephone 425–917–6432; fax 425–917–6590; email: *bill.ashforth@faa.gov.*

(s) Material Incorporated by Reference

(1) You must use the following service information to do the actions required by this AD, unless the AD specifies otherwise. The Director of the Federal Register approved the incorporation by reference (IBR) of the following service information under 5 U.S.C. 552(a) and 1 CFR part 51:

(i) Boeing Alert Service Bulletin 747–53A2303, dated June 2, 1988.

(ii) Boeing Alert Service Bulletin 747–53A2303, Revision 1, dated March 29, 1990.

(iii) Boeing Service Bulletin 747–53A2303, Revision 2, dated October 1, 2009.

(2) For service information identified in this AD, contact Boeing Commercial Airplanes, Attention: Data & Services Management, P.O. Box 3707, MC 2H–65, Seattle, Washington 98124–2207; telephone 206–544–5000, extension 1; fax 206–766–5680; email me*.boecom@boeing.com;* Internet *https://www.myboeingfleet.com.*

(3) You may review copies of the service information at the FAA, Transport Airplane Directorate, 1601 Lind Avenue SW., Renton, Washington. For information on the availability of this material at the FAA, call 425–227–1221.

(4) You may also review copies of the service information that is incorporated by reference at the National Archives and Records Administration (NARA). For information on the availability of this material at an NARA facility, call 202–741–6030, or go to *http://www.archives.gov/federal_register/code_of_federal_regulations/ibr_locations.html.*

Issued in Renton, Washington, on May 8, 2012.

Michael Kaszycki,

Acting Manager, Transport Airplane Directorate, Aircraft Certification Service.

[FR Doc. 2012–11869 Filed 5–18–12; 8:45 am]

BILLING CODE 4910–13–P

DEPARTMENT OF TRANSPORTATION

Federal Aviation Administration

14 CFR Part 39

[Docket No. FAA–2012–0141; Directorate Identifier 2011–NM–092–AD; Amendment 39–17054; AD 2012–10–05]

RIN 2120–AA64

Airworthiness Directives; Fokker Services B.V. Airplanes

AGENCY: Federal Aviation Administration (FAA), Department of Transportation (DOT).

ACTION: Final rule.

SUMMARY: We are adopting a new airworthiness directive (AD) for all Fokker Services B.V. Model F.28 Mark 0070 and 0100 airplanes. This AD was prompted by an in-flight failure of the hydraulic control panel, which resulted in the absence of pressure and quantity indication of the hydraulic system and accompanying alerts for ''hydraulic system 1 low quantity'' and ''hydraulic system 2 low quantity.'' This AD requires implementing new abnormal procedures for hydraulics in the airplane flight manual (AFM). We are issuing this AD to prevent loss of control of the airplane due to incorrect hydraulic system failure information being provided to the flightcrew, followed by application of inappropriate procedures.

DATES: This AD becomes effective June 25, 2012.

The Director of the Federal Register approved the incorporation by reference of a certain publication listed in this AD as of June 25, 2012.

ADDRESSES: You may examine the AD docket on the Internet at *http://www.regulations.gov* or in person at the U.S. Department of Transportation, Docket Operations, M–30, West Building Ground Floor, Room W12–140, 1200 New Jersey Avenue SE., Washington, DC.

FOR FURTHER INFORMATION CONTACT: Tom Rodriguez, Aerospace Engineer, International Branch, ANM–116, Transport Airplane Directorate, FAA, 1601 Lind Avenue SW., Renton, Washington 98057–3356; telephone (425) 227–1137; fax (425) 227–1149.

SUPPLEMENTARY INFORMATION:

Discussion

We issued a notice of proposed rulemaking (NPRM) to amend 14 CFR part 39 to include an AD that would apply to the specified products. That NPRM was published in the **Federal Register** on February 14, 2012 (77 FR 8181). That NPRM proposed to correct an unsafe condition for the specified products. The MCAI states:

> An in-flight failure of the hydraulic control panel resulted in the absence of pressure and quantity indication of the hydraulic system and accompanying alerts for ''hydraulic system 1 low quantity'' and ''hydraulic system 2 low quantity''. The procedures prescribed the shut-off of the engine driven hydraulic pumps, resulting in complete absence of hydraulic pressure, which made it impossible to hydraulically control the flight controls, including the stabiliser. The status information contained in the procedures for these alerts may give the false impression that the stabiliser is still hydraulically controllable on one channel. The flight crew regained control by using the alternate electrically powered stabiliser control.
>
> A safety review revealed that a ''hydraulic system 1 and 2 low quantity'' alert could give the right information, however this alert is not available in the Flight Warning System. To solve this problem, Fokker Services improved the Hydraulic 1(2) Low Quantity Procedures in the Airplane Flight Manual (AFM).
>
> For the reasons described above, this [EASA] AD requires the implementation of new abnormal procedures for hydraulics in the AFM.

The unsafe condition is possible loss of control of the airplane due to incorrect hydraulic system failure information being provided to the flightcrew, followed by application of inappropriate procedures. You may obtain further information by examining the MCAI in the AD docket.

Comments

We gave the public the opportunity to participate in developing this AD. We received no comments on the NPRM (77 FR 8181, February 14, 2012) or on the determination of the cost to the public.

Conclusion

We reviewed the available data and determined that air safety and the public interest require adopting the AD

as proposed, except for minor editorial changes. We have determined that these minor changes:

• Are consistent with the intent that was proposed in the NPRM (77 FR 8181, February 14, 2012) for correcting the unsafe condition; and

• Do not add any additional burden upon the public than was already proposed in the NPRM (77 FR 8181, February 14, 2012).

Costs of Compliance

We estimate that this AD will affect about 4 products of U.S. registry. We also estimate that it will take about 1 work-hour per product to comply with the basic requirements of this AD. The average labor rate is $85 per work-hour. Based on these figures, we estimate the cost of this AD to the U.S. operators to be $340, or $85 per product.

Authority for This Rulemaking

Title 49 of the United States Code specifies the FAA's authority to issue rules on aviation safety. Subtitle I, section 106, describes the authority of the FAA Administrator. ''Subtitle VII: Aviation Programs,'' describes in more detail the scope of the Agency's authority.

We are issuing this rulemaking under the authority described in ''Subtitle VII, Part A, Subpart III, Section 44701: General requirements.'' Under that section, Congress charges the FAA with promoting safe flight of civil aircraft in air commerce by prescribing regulations for practices, methods, and procedures the Administrator finds necessary for safety in air commerce. This regulation is within the scope of that authority because it addresses an unsafe condition that is likely to exist or develop on products identified in this rulemaking action.

Regulatory Findings

We determined that this AD will not have federalism implications under Executive Order 13132. This AD will not have a substantial direct effect on the States, on the relationship between the national government and the States, or on the distribution of power and responsibilities among the various levels of government.

For the reasons discussed above, I certify that this AD:

1. Is not a ''significant regulatory action'' under Executive Order 12866;

2. Is not a ''significant rule'' under the DOT Regulatory Policies and Procedures (44 FR 11034, February 26, 1979);

3. Will not affect intrastate aviation in Alaska; and

4. Will not have a significant economic impact, positive or negative, on a substantial number of small entities under the criteria of the Regulatory Flexibility Act.

We prepared a regulatory evaluation of the estimated costs to comply with this AD and placed it in the AD docket.

Examining the AD Docket

You may examine the AD docket on the Internet at *http://www.regulations.gov;* or in person at the Docket Operations office between 9 a.m. and 5 p.m., Monday through Friday, except Federal holidays. The AD docket contains the NPRM (77 FR 8181, February 14, 2012), the regulatory evaluation, any comments received, and other information. The street address for the Docket Operations office (telephone (800) 647–5527) is in the **ADDRESSES** section. Comments will be available in the AD docket shortly after receipt.

List of Subjects in 14 CFR Part 39

Air transportation, Aircraft, Aviation safety, Incorporation by reference, Safety.

Adoption of the Amendment

Accordingly, under the authority delegated to me by the Administrator, the FAA amends 14 CFR part 39 as follows:

PART 39—AIRWORTHINESS DIRECTIVES

■ 1. The authority citation for part 39 continues to read as follows:

Authority: 49 U.S.C. 106(g), 40113, 44701.

§ 39.13 [Amended]

■ 2. The FAA amends § 39.13 by adding the following new AD:

2012–10–05 Fokker Services B.V.: Amendment 39–17054. Docket No. FAA–2012–0141; Directorate Identifier 2011–NM–092–AD.

(a) Effective Date

This airworthiness directive (AD) becomes effective June 25, 2012.

(b) Affected ADs

None.

(c) Applicability

This AD applies to Fokker Services B.V. Model F.28 Mark 0070 and 0100 airplanes, certificated in any category, all serial numbers.

(d) Subject

Air Transport Association (ATA) of America Code 29, Hydraulic power.

(e) Reason

This AD was prompted by an in-flight failure of the hydraulic control panel, which resulted in the absence of pressure and quantity indication of the hydraulic system and accompanying alerts for ''hydraulic system 1 low quantity'' and ''hydraulic system 2 low quantity.'' We are issuing this AD to prevent loss of control of the airplane due to incorrect hydraulic system failure information being provided to the flightcrew, followed by application of inappropriate procedures.

(f) Compliance

You are responsible for having the actions required by this AD performed within the compliance times specified, unless the actions have already been done.

(g) Airplane Flight Manual (AFM) Revision

Within 3 months after the effective date of this AD, revise the Abnormal Procedures—Hydraulics section of the Fokker F.28 AFM by incorporating the information specified in Fokker Manual Change Notification—Operational Documentation (MCNO) MCNO–F100–057, dated December 17, 2010, into the Abnormal Procedures—Hydraulics section of the AFM.

Note 1 to paragraph (g) of this AD: The actions required by paragraph (g) of this AD may be done by inserting a copy of Fokker MCNO MCNO–F100–057, dated December 17, 2010, into the Abnormal Procedures—Hydraulics section of the Fokker F.28 AFM. When Fokker MCNO MCNO–F100–057, dated December 17, 2010, has been included in the general revisions of the AFM, the general revisions may be inserted in the AFM, provided the relevant information in the general revision is identical to that in Fokker MCNO MCNO–F100–057, dated December 17, 2010, and that MCNO may be removed.

(h) Other FAA AD Provisions

The following provisions also apply to this AD:

(1) *Alternative Methods of Compliance (AMOCs):* The Manager, International Branch, ANM–116, Transport Airplane Directorate, FAA, has the authority to approve AMOCs for this AD, if requested using the procedures found in 14 CFR 39.19. In accordance with 14 CFR 39.19, send your request to your principal inspector or local Flight Standards District Office, as appropriate. If sending information directly to the International Branch, send it to Attn: Tom Rodriguez, Aerospace Engineer, International Branch, ANM–116, Transport Airplane Directorate, FAA, 1601 Lind Avenue SW., Renton, Washington 98057–3356; telephone (425) 227–1137; fax (425) 227–1149. Information may be emailed to: *9-ANM-116-AMOC-REQUESTS@faa.gov.* Before using any approved AMOC, notify your appropriate principal inspector, or lacking a principal inspector, the manager of the local flight standards district office/certificate holding district office. The AMOC approval letter must specifically reference this AD.

(2) *Airworthy Product:* For any requirement in this AD to obtain corrective actions from a manufacturer or other source, use these actions if they are FAA-approved. Corrective actions are considered FAA-approved if they are approved by the State of Design Authority (or their delegated agent). You are required

to assure the product is airworthy before it is returned to service.

(i) Related Information

Refer to MCAI European Aviation Safety Agency (EASA) Airworthiness Directive 2011–0051, dated March 22, 2011; and Fokker MCNO MCNO–F100–057, dated December 17, 2010; for related information.

(j) Material Incorporated by Reference

(1) The Director of the **Federal Register** approved the incorporation by reference (IBR) of the following service information under 5 U.S.C. 552(a) and 1 CFR part 51.

(2) You must use the following service information to do the actions required by this AD, unless the AD specifies otherwise.

(i) Fokker Manual Change Notification—Operational Documentation MCNO–F100–057, dated December 17, 2010.

(3) For service information identified in this AD, contact Fokker Services B.V., Technical Services Dept., P.O. Box 231, 2150 AE Nieuw-Vennep, the Netherlands; telephone +31 (0)252–627–350; fax +31 (0)252–627–211; email *technicalservices.fokkerservices@stork.com;* Internet *http://www.myfokkerfleet.com.*

(4) You may review copies of the service information at the FAA, Transport Airplane Directorate, 1601 Lind Avenue SW., Renton, Washington. For information on the availability of this material at the FAA, call 425–227–1221.

(5) You may also review copies of the service information that is incorporated by reference at the National Archives and Records Administration (NARA). For information on the availability of this material at an NARA facility, call 202–741–6030, or go to *http://www.archives.gov/federal_register/code_of_federal_regulations/ibr_locations.html.*

Issued in Renton, Washington, on May 9, 2012.

Michael Kaszycki,

Acting Manager, Transport Airplane Directorate, Aircraft Certification Service.

[FR Doc. 2012–11954 Filed 5–18–12; 8:45 am]

BILLING CODE 4910–13–P

DEPARTMENT OF TRANSPORTATION

Federal Aviation Administration

14 CFR Part 39

[Docket No. FAA–2012–0534; Directorate Identifier 2012–CE–015–AD; Amendment 39–17053; AD 2012–10–04]

RIN 2120–AA64

Airworthiness Directives; Cessna Aircraft Company Airplanes

AGENCY: Federal Aviation Administration (FAA), DOT.

ACTION: Final rule; request for comments.

SUMMARY: We are adopting a new airworthiness directive (AD) for certain Cessna Aircraft Company Models 210G, T210G, 210H, T210H, 210J, T210J, 210K, T210K, 210L, T210L, 210M, T210M, 210N, T210N, P210N, 210R, T210R, and P210R airplanes. This AD requires an inspection(s) of the left and right wing lower main spar caps for cracks and either replacing cracked wing lower main spar caps, wing spars, or wings (as applicable) with serviceable spar caps, spars, or wings that are found free of cracks or incorporating an FAA-approved modification. This AD also requires reporting the results of the inspections to the FAA. This AD was prompted by reports of cracks found in the wing lower main spar caps on the above-referenced airplanes with cantilever metal wings. We are issuing this AD to correct the unsafe condition on these products.

DATES: This AD is effective June 5, 2012.

The Director of the Federal Register approved the incorporation by reference of a certain publication listed in the AD as of June 5, 2012.

We must receive comments on this AD by July 5, 2012.

ADDRESSES: You may send comments, using the procedures found in 14 CFR 11.43 and 11.45, by any of the following methods:

- *Federal eRulemaking Portal:* Go to *http://www.regulations.gov*. Follow the instructions for submitting comments.
- *Fax:* 202–493–2251.
- *Mail:* U.S. Department of Transportation, Docket Operations, M–30, West Building Ground Floor, Room W12–140, 1200 New Jersey Avenue SE., Washington, DC 20590.
- *Hand Delivery:* U.S. Department of Transportation, Docket Operations, M–30, West Building Ground Floor, Room W12–140, 1200 New Jersey Avenue SE., Washington, DC 20590, between 9 a.m. and 5 p.m., Monday through Friday, except Federal holidays.

For service information identified in this AD, contact Cessna Aircraft Company, Customer Support Service, P.O. Box 7706, Wichita, Kansas 67277; telephone: (316) 517–5800; fax (316) 517–7271; Internet: *www.cessnasupport.com*. You may review copies of the referenced service information at the FAA, Small Airplane Directorate, 901 Locust, Kansas City, Missouri 64106. For information on the availability of this material at the FAA, call (816) 329–4148.

Examining the AD Docket

You may examine the AD docket on the Internet at *http://www.regulations.gov;* or in person at the Docket Management Facility between 9 a.m. and 5 p.m., Monday through Friday, except Federal holidays. The AD docket contains this AD, the regulatory evaluation, any comments received, and other information. The street address for the Docket Office (phone: 800–647–5527) is in the **ADDRESSES** section. Comments will be available in the AD docket shortly after receipt.

FOR FURTHER INFORMATION CONTACT: Gary D. Park, Aerospace Engineer, Wichita Aircraft Certification Office, (ACO), FAA, 1801 Airport Road, Wichita, KS 67209; phone: (316) 946–4123; fax: (316) 946–4107; email: *WICHITA-COS@FAA.GOV*.

SUPPLEMENTARY INFORMATION:

Discussion

We received reports of cracks found in the wing lower main spar caps on Cessna Aircraft Company Models 210G, T210G, 210H, T210H, 210J, T210J, 210K, T210K, 210L, T210L, 210M, T210M, 210N, T210N, P210N, 210R, T210R, and P210R airplanes with cantilever metal wings. The reports include a wing lower main spar cap that was completely severed with the skin split. This condition, if not corrected, could result in structural failure of the wing with consequent loss of control.

Relevant Service Information

We reviewed Cessna Aircraft Company Single Engine Service Letter SEL–57–01, Revision 1, dated May 9, 2012. The service letter describes procedures for visually inspecting the right and left lower main spar caps for cracks and replacing the spar cap, wing spar, or wing, as applicable.

FAA's Determination

We are issuing this AD because we evaluated all the relevant information and determined the unsafe condition described previously is likely to exist or develop in other products of the same type design.

AD Requirements

This AD requires a one-time internal (for all airplanes) and external (for certain airplanes) visual inspection of the left and right wing lower main spar caps for cracks and either replacing cracked wing lower main spar caps, wing spars, or wings, or incorporating an FAA-approved modification. This AD also requires reporting the results of the inspections to the FAA, Wichita ACO.

Interim Action

We consider this AD interim action. We are requiring inspection(s) of the left and right wing lower main spar caps with a report to the FAA of the results. We will work with the type certificate

holder to evaluate that information to determine repetitive inspection intervals and subsequent terminating action. Based on this evaluation, we may initiate further rulemaking action to address the unsafe condition identified in this AD.

FAA's Justification and Determination of the Effective Date

An unsafe condition exists that requires the immediate adoption of this AD. The FAA has found that the risk to the flying public justifies waiving notice and comment prior to adoption of this rule because cracks in the wing lower main spar caps could result in structural failure of the wing during flight with consequent loss of control. Therefore, we find that notice and opportunity for prior public comment are impracticable and that good cause exists for making this amendment effective in less than 30 days.

Comments Invited

This AD is a final rule that involves requirements affecting flight safety and was not preceded by notice and an opportunity for public comment. However, we invite you to send any written data, views, or arguments about this AD. Send your comments to an address listed under the **ADDRESSES** section. Include the docket number FAA–2012–0534 and Directorate Identifier 2012–CE–015–AD at the beginning of your comments. We specifically invite comments on the overall regulatory, economic, environmental, and energy aspects of this AD. We will consider all comments received by the closing date and may amend this AD because of those comments.

We will post all comments we receive, without change, to *http://www.regulations.gov*, including any personal information you provide. We will also post a report summarizing each substantive verbal contact we receive about this AD.

Costs of Compliance

We estimate that this AD affects 3,665 airplanes of U.S. registry.

We estimate the following costs to comply with this AD:

ESTIMATED COSTS

Action	Labor cost	Parts cost	Cost per product	Cost on U.S. operators
Internal and external inspection of the left and right wing lower main spar caps for cracks.	From 3 to 6 work-hours × $85 per hour = From $255 to $510.	Not applicable	From $255 to $510	From $934,575 to $1,869,150.

Currently, there is no FAA-approved modification for a cracked wing lower main spar cap. If cracks are found during the inspections required by this AD, further flight is prohibited until an FAA-approved modification is incorporated or the cracked wing lower main spar cap is replaced with a serviceable spar cap, wing spar, or wing (as applicable) if one is available. The FAA does not have availability and cost information on serviceable spar caps, wing spars, or wings. Therefore, at this time, the FAA has no way of determining any on-condition costs associated with replacing or modifying cracked wing lower main spar caps.

Authority for This Rulemaking

Title 49 of the United States Code specifies the FAA's authority to issue rules on aviation safety. Subtitle I, section 106, describes the authority of the FAA Administrator. ''Subtitle VII: Aviation Programs'' describes in more detail the scope of the Agency's authority.

We are issuing this rulemaking under the authority described in Subtitle VII, Part A, Subpart III, Section 44701: ''General requirements.'' Under that section, Congress charges the FAA with promoting safe flight of civil aircraft in air commerce by prescribing regulations for practices, methods, and procedures the Administrator finds necessary for safety in air commerce. This regulation is within the scope of that authority because it addresses an unsafe condition that is likely to exist or develop on products identified in this rulemaking action.

Regulatory Findings

This AD will not have federalism implications under Executive Order 13132. This AD will not have a substantial direct effect on the States, on the relationship between the national government and the States, or on the distribution of power and responsibilities among the various levels of government.

For the reasons discussed above, I certify that this AD:

(1) Is not a ''significant regulatory action'' under Executive Order 12866,

(2) Is not a ''significant rule'' under DOT Regulatory Policies and Procedures (44 FR 11034, February 26, 1979),

(3) Will not affect intrastate aviation in Alaska, and

(4) Will not have a significant economic impact, positive or negative, on a substantial number of small entities under the criteria of the Regulatory Flexibility Act.

List of Subjects in 14 CFR Part 39

Air transportation, Aircraft, Aviation safety, Incorporation by reference, Safety.

Adoption of the Amendment

Accordingly, under the authority delegated to me by the Administrator, the FAA amends 14 CFR part 39 as follows:

PART 39—AIRWORTHINESS DIRECTIVES

■ 1. The authority citation for part 39 continues to read as follows:

Authority: 49 U.S.C. 106(g), 40113, 44701.

§ 39.13 [Amended]

■ 2. The FAA amends § 39.13 by adding the following new airworthiness directive (AD):

2012–10–04 Cessna Aircraft Company (Cessna): Amendment 39–17053; Docket No. FAA–2012–0534; Directorate Identifier 2012–CE–015–AD.

(a) Effective Date

This AD is effective June 5, 2012.

(b) Affected ADs

None.

(c) Applicability

This AD applies to the following Cessna model airplanes listed in paragraphs (c)(1) through (c)(13) of this AD, certificated in any category:

(1) *210G:* Serial numbers (S/Ns) 21058819 through 21058936,

(2) *T210G:* S/Ns T210–0198 through T210–0307,

(3) *210H:* S/Ns 21058937 through 21059061,

(4) *T210H:* S/Ns T210–0308 through T210–0392,

(5) *210J:* S/Ns 21059062 through 21059199,

(6) *T210J:* S/Ns 21058140, and T210–0393 through T210–0454,

(7) *210K and T210K:* S/Ns 21059200 through 21059502,

(8) *210L and T210L:* S/Ns 21059503 through 21061041, and 21061043 through 21061573,

(9) *210M and T210M:* S/Ns 21061042, 21061574 through 21062954,

(10) *210N and T210N:* S/Ns 21062955 through 21064897,

(11) *P210N:* S/Ns P21000001 through P21000834,

(12) *210R and T210R:* S/Ns 21064898 through 21065009, and

(13) *P210R:* S/Ns P21000835 through P21000874.

(d) Subject

Joint Aircraft System Component (JASC)/ Air Transport Association (ATA) of America Code 57, Wings.

(e) Unsafe Condition

This AD was prompted by reports of cracks found in the wing lower main spar caps on the affected airplanes with cantilever metal wings. We are issuing this AD to prevent structural failure of the wing with consequent loss of control.

(f) Compliance

Comply with this AD within the compliance times specified, unless already done.

(g) Inspection of the Left Wing and the Right Wing

(1) For airplanes with 10,000 hours time-in-service (TIS) or more as of June 5, 2012, (the effective date of this AD), do the following in accordance with Cessna Single Engine Service Letter SEL–57–01, Revision 1, dated May 9, 2012:

(i) Before further flight after June 5, 2012 (the effective date of this AD), do an external visual inspection of the outer skin underneath the main spar cap fitting between wing station (WS) 25.25 and WS 45.00 for cracks.

(ii) If no cracks are found during the inspection required in paragraph (g)(1)(i) of this AD, within the next 5 hours TIS after June 5, 2012 (the effective date of this AD), do an internal visual inspection of the wing lower main spar caps between WS 25.25 and WS 45.00 for cracks.

(2) For airplanes with 5,000 hours TIS or more, but less than 10,000 hours TIS as of June 5, 2012 (the effective date of this AD), within the next 25 hours TIS after June 5, 2012 (the effective date of this AD), do an internal visual inspection of the wing lower main spar caps between WS 25.25 and WS 45.00 for cracks in accordance with Cessna Single Engine Service Letter SEL–57–01, Revision 1, dated May 9, 2012.

(3) For airplanes with less than 5,000 TIS as of June 5, 2012 (the effective date of this AD), when the airplane reaches 5,000 hours TIS or within the next 25 hours TIS after June 5, 2012 (the effective date of this AD), whichever occurs later, do an internal visual inspection of the wing lower main spar caps between WS 25.25 and WS 45.00 for cracks in accordance with Cessna Single Engine Service Letter SEL–57–01, Revision 1, dated May 9, 2012.

(h) Corrective Action

If cracks are found during the inspections required in paragraphs (g)(1)(i), (g)(1)(ii), (g)(2), or (g)(3) of this AD, before further flight after the inspection in which cracks are found, either replace the cracked part (spar cap, wing spar, or wing, as applicable) with a serviceable part that is found free of cracks or modify the spar cap, wing spar, or wing (as applicable) following a procedure approved for this AD by the FAA, Wichita Aircraft Certification Office (ACO).

(i) Reporting Requirement

Within 10 days after each inspection or 10 days after June 5, 2012 (the effective date of this AD), whichever occurs later, report the results of the inspections to the FAA, Wichita ACO, Attn: Gary D. Park, Aerospace Engineer, 1801 Airport Road, Room 100; fax: (316) 946–4107; email: *WICHITA-COS@FAA.GOV*. Include the following information in addition to the undated Attachment (titled Wing Lower Main Spar Cap Inspection Report) to Cessna Single Engine Service Letter SEL–57–01, Revision 1, dated May 9, 2012. Please identify AD 2012–10–04 in the subject line if submitted through email.

(1) Hours TIS at time of inspection.

(2) Installed wing modifications.

(3) Approved gross weight increases.

(4) Extended low altitude operations (i.e., pipe line survey, surface spotting, sight-seeing, etc.)

(5) A description of any cracks detected.

(j) Credit for Actions Accomplished in Accordance With Previous Service Information

This paragraph provides credit for the actions required in paragraphs (g) and (h) of this AD if already done before June 5, 2012 (the effective date of this AD) following Cessna Single Engine Service Letter SEL–57–01, dated April 27, 2012.

(k) Paperwork Reduction Act Burden Statement

A federal agency may not conduct or sponsor, and a person is not required to respond to, nor shall a person be subject to a penalty for failure to comply with a collection of information subject to the requirements of the Paperwork Reduction Act unless that collection of information displays a current valid OMB Control Number. The OMB Control Number for this information collection is 2120–0056. Public reporting for this collection of information is estimated to be approximately 5 minutes per response, including the time for reviewing instructions, completing and reviewing the collection of information. All responses to this collection of information are mandatory. Comments concerning the accuracy of this burden and suggestions for reducing the burden should be directed to the FAA at: 800 Independence Ave. SW., Washington, DC 20591, Attn: Information Collection Clearance Officer, AES–200.

(l) Alternative Methods of Compliance (AMOCs)

(1) The Manager, Wichita ACO, FAA, has the authority to approve AMOCs for this AD, if requested using the procedures found in 14 CFR 39.19. In accordance with 14 CFR 39.19, send your request to your principal inspector or local Flight Standards District Office, as appropriate. If sending information directly to the manager of the ACO, send it to the attention of the person identified in the Related Information section of this AD.

(2) Before using any approved AMOC, notify your appropriate principal inspector, or lacking a principal inspector, the manager of the local flight standards district office/ certificate holding district office.

(m) Related Information

For more information about this AD, contact Gary D. Park, Aerospace Engineer, Wichita ACO, FAA, 1801 Airport Road, Wichita, KS 67209; phone: (316) 946–4123; fax: (316) 946–4107; email: *WICHITA–COS@FAA.GOV.*

(n) Material Incorporated by Reference

(1) You must use Cessna Single Engine Service Letter SEL–57–01, Revision 1, dated May 9, 2012, (includes the undated Attachment titled Wing Lower Main Spar Cap Inspection Report) to do the actions required by this AD, unless the AD specifies otherwise. The Director of the Federal Register approved the incorporation by reference (IBR) under 5 U.S.C. 552(a) and 1 CFR part 51.

(2) For service information identified in this AD, contact Cessna Aircraft Company, Customer Support Service, P.O. Box 7706, Wichita, Kansas 67277; telephone: (316) 517–5800; fax (316) 517–7271; Internet: *www.cessnasupport.com.*

(3) You may review copies of the referenced service information at the FAA, Small Airplane Directorate, 901 Locust, Kansas City, Missouri 64106. For information on the availability of this material at the FAA, call (816) 329–4148.

(4) You may also review copies of the service information that is incorporated by reference at the National Archives and Records Administration (NARA). For information on the availability of this material at NARA, call 202–741–6030, or go to: *http://www.archives.gov/federal-register/cfr/ibr_locations.html.*

Issued in Kansas City, Missouri, on May 11, 2012.

John Colomy,

Acting Manager, Small Airplane Directorate, Aircraft Certification Service.

[FR Doc. 2012–11944 Filed 5–18–12; 8:45 am]

BILLING CODE 4910–13–P

DEPARTMENT OF TRANSPORTATION

Federal Aviation Administration

14 CFR Part 71

[Docket No. FAA–2011–0608; Airspace Docket No. 11–ASW–6]

Amendment of Class E Airspace; Leesville, LA

AGENCY: Federal Aviation Administration (FAA), DOT.

ACTION: Final rule.

SUMMARY: This action amends Class E airspace at Leesville, LA. Additional controlled airspace is necessary to

accommodate new Area Navigation (RNAV) Standard Instrument Approach Procedures at Leesville Airport. The FAA is taking this action to enhance the safety and management of Instrument Flight Rule (IFR) operations at the airport.

DATES: Effective date: 0901 UTC, July 26, 2012. The Director of the Federal Register approves this incorporation by reference action under 1 CFR part 51, subject to the annual revision of FAA Order 7400.9 and publication of conforming amendments.

FOR FURTHER INFORMATION CONTACT: Scott Enander, Central Service Center, Operations Support Group, Federal Aviation Administration, Southwest Region, 2601 Meacham Blvd., Fort Worth, TX 76137; telephone 817–321–7716.

SUPPLEMENTARY INFORMATION:

History

On January 31, 2012, the FAA published in the **Federal Register** a notice of proposed rulemaking (NPRM) to amend Class E airspace for the Leesville, LA, area, creating additional controlled airspace at Leesville Airport (77 FR 4702) Docket No. FAA–2011–0608. Interested parties were invited to participate in this rulemaking effort by submitting written comments on the proposal to the FAA. No comments were received. Class E airspace designations are published in paragraph 6005 of FAA Order 7400.9V dated August 9, 2011, and effective September 15, 2011, which is incorporated by reference in 14 CFR Part 71.1. The Class E airspace designations listed in this document will be published subsequently in the Order.

The Rule

This action amends Title 14 Code of Federal Regulations (14 CFR) part 71 by amending Class E airspace extending upward from 700 feet above the surface to accommodate new standard instrument approach procedures at Leesville Airport, Leesville, LA. This action is necessary for the safety and management of IFR operations at the airport. Geographic coordinates are also updated to coincide with the FAA's aeronautical database.

The FAA has determined that this regulation only involves an established body of technical regulations for which frequent and routine amendments are necessary to keep them operationally current. Therefore, this regulation: (1) Is not a ''significant regulatory action'' under Executive Order 12866; (2) is not a ''significant rule'' under DOT Regulatory Policies and Procedures (44 FR 11034; February 26, 1979); and (3) does not warrant preparation of a regulatory evaluation as the anticipated impact is so minimal. Since this is a routine matter that will only affect air traffic procedures and air navigation, it is certified that this rule, when promulgated, will not have a significant economic impact on a substantial number of small entities under the criteria of the Regulatory Flexibility Act.

The FAA's authority to issue rules regarding aviation safety is found in Title 49 of the U.S. Code. Subtitle 1, Section 106, describes the authority of the FAA Administrator. Subtitle VII, Aviation Programs, describes in more detail the scope of the agency's authority. This rulemaking is promulgated under the authority described in Subtitle VII, Part A, Subpart I, Section 40103. Under that section, the FAA is charged with prescribing regulations to assign the use of airspace necessary to ensure the safety of aircraft and the efficient use of airspace. This regulation is within the scope of that authority as it amends controlled airspace at Leesville Airport, Leesville, LA.

List of Subjects in 14 CFR Part 71

Airspace, Incorporation by reference, Navigation (air).

Adoption of the Amendment

In consideration of the foregoing, the Federal Aviation Administration amends 14 CFR part 71 as follows:

PART 71—DESIGNATION OF CLASS A, B, C, D, AND E AIRSPACE AREAS; AIR TRAFFIC SERVICE ROUTES; AND REPORTING POINTS

■ 1. The authority citation for 14 CFR part 71 continues to read as follows:

Authority: 49 U.S.C. 106(g), 40103, 40113, 40120; E.O. 10854, 24 FR 9565, 3 CFR, 1959–1963 Comp., p. 389.

§ 71.1 [Amended]

■ 2. The incorporation by reference in 14 CFR part 71.1 of the Federal Aviation Administration Order 7400.9V, Airspace Designations and Reporting Points, dated August 9, 2011, and effective September 15, 2011, is amended as follows:

Paragraph 6005 Class E airspace areas extending upward from 700 feet or more above the surface.

* * * * *

ASW LA E5 Leesville, LA [Amended]

Leesville Airport, LA
(Lat. 31°10′06″ N., long. 93°20′33″ W.)
Leesville NDB
(Lat. 31°06′08″ N., long. 93°20′31″ W.)

That airspace extending upward from 700 feet above the surface within a 6.5-mile radius of Leesville Airport, and within 3.6 miles each side of the 345° bearing from the airport extending from the 6.5-mile radius to 12.2 miles north of the airport, and within 2.5 miles each side of the 000° bearing of the Leesville NDB extending from the 6.5-mile radius to 7.3 miles north of the airport, excluding that airspace within the Fort Polk, LA, Class D airspace area, and excluding that airspace within restricted area R–3803A.

Issued in Fort Worth, Texas, on May 10, 2012.

Walter L. Tweedy,

Acting Manager, Operations Support Group, ATO Central Service Center.

[FR Doc. 2012–12084 Filed 5–18–12; 8:45 am]

BILLING CODE 4910–13–P

DEPARTMENT OF TRANSPORTATION

Federal Aviation Administration

14 CFR Part 71

[Docket No. FAA–2011–0847; Airspace Docket No. 11–ASW–11]

Amendment of Class E Airspace; Springhill, LA

AGENCY: Federal Aviation Administration (FAA), DOT.

ACTION: Final rule.

SUMMARY: This action amends Class E airspace for Springhill, LA. Decommissioning of the Springhill non-directional beacon (NDB) at Springhill Airport has made this action necessary to enhance the safety and management of Instrument Flight Rule (IFR) operations at the airport. The geographic coordinates of the airport also are adjusted.

DATES: Effective date: 0901 UTC, July 26, 2012. The Director of the Federal Register approves this incorporation by reference action under 1 CFR Part 51, subject to the annual revision of FAA Order 7400.9 and publication of conforming amendments.

FOR FURTHER INFORMATION CONTACT: Scott Enander, Central Service Center, Operations Support Group, Federal Aviation Administration, Southwest Region, 2601 Meacham Blvd., Fort Worth, TX 76137; telephone (817) 321–7716.

SUPPLEMENTARY INFORMATION:

History

On January 31, 2012, the FAA published in the **Federal Register** a notice of proposed rulemaking to amend Class E airspace for Springhill, LA, reconfiguring controlled airspace at Springhill Airport (77 FR 4707) Docket

No. FAA–2011–0847. Interested parties were invited to participate in this rulemaking effort by submitting written comments on the proposal to the FAA. No comments were received. Class E airspace designations are published in paragraph 6005 of FAA Order 7400.9V dated August 9, 2011, and effective September 15, 2011, which is incorporated by reference in 14 CFR 71.1. The Class E airspace designations listed in this document will be published subsequently in the Order.

The Rule

This action amends Title 14 Code of Federal Regulations (14 CFR) Part 71 by amending Class E airspace extending upward from 700 feet above the surface for the Springhill, LA area. Decommissioning of the Springhill NDB and cancellation of the NDB approach at Springhill Airport has made reconfiguration of the airspace necessary for the safety and management of IFR operations at the airport. Geographic coordinates are updated to coincide with the FAA's aeronautical database.

The FAA has determined that this regulation only involves an established body of technical regulations for which frequent and routine amendments are necessary to keep them operationally current. Therefore, this regulation: (1) Is not a ''significant regulatory action'' under Executive Order 12866; (2) is not a ''significant rule'' under DOT Regulatory Policies and Procedures (44 FR 11034; February 26, 1979); and (3) does not warrant preparation of a regulatory evaluation as the anticipated impact is so minimal. Since this is a routine matter that will only affect air traffic procedures and air navigation, it is certified that this rule, when promulgated, will not have a significant economic impact on a substantial number of small entities under the criteria of the Regulatory Flexibility Act.

The FAA's authority to issue rules regarding aviation safety is found in Title 49 of the U.S. Code. Subtitle 1, Section 106, describes the authority of the FAA Administrator. Subtitle VII, Aviation Programs, describes in more detail the scope of the agency's authority. This rulemaking is promulgated under the authority described in Subtitle VII, Part A, Subpart I, Section 40103. Under that section, the FAA is charged with prescribing regulations to assign the use of airspace necessary to ensure the safety of aircraft and the efficient use of airspace. This regulation is within the scope of that authority as it amends controlled airspace at Springhill Airport, Springhill, LA.

List of Subjects in 14 CFR Part 71

Airspace, Incorporation by reference, Navigation (air).

Adoption of the Amendment

In consideration of the foregoing, the Federal Aviation Administration amends 14 CFR part 71 as follows:

PART 71—DESIGNATION OF CLASS A, B, C, D, AND E AIRSPACE AREAS; AIR TRAFFIC SERVICE ROUTES; AND REPORTING POINTS

■ 1. The authority citation for 14 CFR Part 71 continues to read as follows:

Authority: 49 U.S.C. 106(g), 40103, 40113, 40120; E.O. 10854, 24 FR 9565, 3 CFR, 1959–1963 Comp., p. 389.

§ 71.1 [Amended]

■ 2. The incorporation by reference in 14 CFR 71.1 of the Federal Aviation Administration Order 7400.9V, Airspace Designations and Reporting Points, dated August 9, 2011, and effective September 15, 2011 is amended as follows:

* * * * *

Paragraph 6005 Class E airspace areas extending upward from 700 feet or more above the surface.

* * * * *

ASW LA E5 Springhill, LA [Amended]

Springhill Airport, LA
(Lat. 32°59′00″ N., long. 93°24′33″ W.)

That airspace extending upward from 700 feet above the surface within a 6.4-mile radius of Springhill Airport.

Issued in Fort Worth, Texas, on May 11, 2012.

Walter L. Tweedy,

Acting Manager, Operations Support Group, ATO Central Service Center.

[FR Doc. 2012–12165 Filed 5–18–12; 8:45 am]

BILLING CODE 4910–13–P

DEPARTMENT OF TRANSPORTATION

Federal Aviation Administration

14 CFR Part 71

[Docket No. FAA–2011–0434; Airspace Docket No. 11–ACE–9]

Amendment of Class E Airspace; Maryville, MO

AGENCY: Federal Aviation Administration (FAA), DOT.

ACTION: Final rule.

SUMMARY: This action amends Class E airspace for Maryville, MO. Decommissioning of the Emville non-directional beacon (NDB) at Northwest Missouri Regional Airport has made this action necessary to enhance the safety and management of Instrument Flight Rule (IFR) operations at the airport. The geographic coordinates of the airport also are adjusted.

DATES: Effective date: 0901 UTC, July 26, 2012. The Director of the Federal Register approves this incorporation by reference action under 1 CFR part 51, subject to the annual revision of FAA Order 7400.9 and publication of conforming amendments.

FOR FURTHER INFORMATION CONTACT: Scott Enander, Central Service Center, Operations Support Group, Federal Aviation Administration, Southwest Region, 2601 Meacham Blvd., Fort Worth, TX 76137; telephone 817–321–7716.

SUPPLEMENTARY INFORMATION:

History

On January 31, 2012, the FAA published in the **Federal Register** a notice of proposed rulemaking to amend Class E airspace for Maryville, MO, reconfiguring controlled airspace at Northwest Missouri Regional Airport (77 FR 4703) Docket No. FAA–2011–0434. Interested parties were invited to participate in this rulemaking effort by submitting written comments on the proposal to the FAA. No comments were received. Class E airspace designations are published in paragraph 6005 of FAA Order 7400.9V dated August 9, 2011, and effective September 15, 2011, which is incorporated by reference in 14 CFR Part 71.1. The Class E airspace designations listed in this document will be published subsequently in the Order.

The Rule

This action amends Title 14 Code of Federal Regulations (14 CFR) Part 71 by amending Class E airspace extending upward from 700 feet above the surface for the Maryville, MO area. Decommissioning of the Emville NDB and cancellation of the NDB approach at Northwest Missouri Regional Airport has made reconfiguration of the airspace necessary for the safety and management of IFR operations at the airport. Geographic coordinates are also updated to coincide with the FAA's aeronautical database.

The FAA has determined that this regulation only involves an established body of technical regulations for which frequent and routine amendments are necessary to keep them operationally current. Therefore, this regulation: (1) Is not a ''significant regulatory action'' under Executive Order 12866; (2) is not a ''significant rule'' under DOT Regulatory Policies and Procedures (44

FR 11034; February 26, 1979); and (3) does not warrant preparation of a regulatory evaluation as the anticipated impact is so minimal. Since this is a routine matter that will only affect air traffic procedures and air navigation, it is certified that this rule, when promulgated, will not have a significant economic impact on a substantial number of small entities under the criteria of the Regulatory Flexibility Act.

The FAA's authority to issue rules regarding aviation safety is found in Title 49 of the U.S. Code. Subtitle 1, Section 106, describes the authority of the FAA Administrator. Subtitle VII, Aviation Programs, describes in more detail the scope of the agency's authority. This rulemaking is promulgated under the authority described in Subtitle VII, Part A, Subpart I, Section 40103. Under that section, the FAA is charged with prescribing regulations to assign the use of airspace necessary to ensure the safety of aircraft and the efficient use of airspace. This regulation is within the scope of that authority as it amends controlled airspace at Northwest Missouri Regional Airport, Maryville, MO.

List of Subjects in 14 CFR Part 71

Airspace, Incorporation by reference, Navigation (air).

Adoption of the Amendment

In consideration of the foregoing, the Federal Aviation Administration amends 14 CFR part 71 as follows:

PART 71—DESIGNATION OF CLASS A, B, C, D, AND E AIRSPACE AREAS; AIR TRAFFIC SERVICE ROUTES; AND REPORTING POINTS

■ 1. The authority citation for 14 CFR part 71 continues to read as follows:

Authority: 49 U.S.C. 106(g), 40103, 40113, 40120; E.O. 10854, 24 FR 9565, 3 CFR, 1959–1963 Comp., p. 389.

§ 71.1 [Amended]

■ 2. The incorporation by reference in 14 CFR Part 71.1 of the Federal Aviation Administration Order 7400.9V, Airspace Designations and Reporting Points, dated August 9, 2011, and effective September 15, 2011 is amended as follows:

* * * * *

Paragraph 6005 Class E airspace areas extending upward from 700 feet or more above the surface.

* * * * *

ACE MO E5 Maryville, MO [Amended]

Maryville, Northwest Missouri Regional Airport, MO

(Lat. 40°21′12″ N., long. 94°55′00″ W.)

That airspace extending upward from 700 feet above the surface within a 6.5-mile radius of Northwest Missouri Regional Airport.

Issued in Fort Worth, Texas, on May 10, 2012.

Walter L. Tweedy,

Acting Manager, Operations Support Group, ATO Central Service Center.

[FR Doc. 2012–12166 Filed 5–18–12; 8:45 am]

BILLING CODE 4910–13–P

DEPARTMENT OF TRANSPORTATION

Federal Aviation Administration

14 CFR Part 71

[Docket No. FAA–2011–1400; Airspace Docket No. 11–ASW–15]

Amendment of Class E Airspace; Monahans, TX

AGENCY: Federal Aviation Administration (FAA), DOT.

ACTION: Final rule.

SUMMARY: This action amends Class E airspace at Monahans, TX. Additional controlled airspace is necessary to accommodate new Area Navigation (RNAV) Standard Instrument Approach Procedures at Roy Hurd Memorial Airport. The airport's geographic coordinates also are adjusted. The FAA is taking this action to enhance the safety and management of Instrument Flight Rule (IFR) operations at the airport.

DATES: *Effective date:* 0901 UTC, July 26, 2012. The Director of the Federal Register approves this incorporation by reference action under 1 CFR part 51, subject to the annual revision of FAA Order 7400.9 and publication of conforming amendments.

FOR FURTHER INFORMATION CONTACT: Scott Enander, Central Service Center, Operations Support Group, Federal Aviation Administration, Southwest Region, 2601 Meacham Blvd., Fort Worth, TX 76137; telephone 817–321–7716.

SUPPLEMENTARY INFORMATION:

History

On January 31, 2012, the FAA published in the **Federal Register** a notice of proposed rulemaking (NPRM) to amend Class E airspace for the Monahans, TX, area, creating additional controlled airspace at Roy Hurd Memorial Airport (77 FR 4704) Docket No. FAA–2011–1400. Interested parties were invited to participate in this rulemaking effort by submitting written comments on the proposal to the FAA. No comments were received. Class E airspace designations are published in paragraph 6005 of FAA Order 7400.9V dated August 9, 2011, and effective September 15, 2011, which is incorporated by reference in 14 CFR 71.1. The Class E airspace designations listed in this document will be published subsequently in the Order.

The Rule

This action amends Title 14 Code of Federal Regulations (14 CFR) Part 71 by amending Class E airspace extending upward from 700 feet above the surface to accommodate new standard instrument approach procedures at Roy Hurd Memorial Airport, Monahans, TX. This action is necessary for the safety and management of IFR operations at the airport. Geographic coordinates are updated to coincide with the FAA's aeronautical database.

The FAA has determined that this regulation only involves an established body of technical regulations for which frequent and routine amendments are necessary to keep them operationally current. Therefore, this regulation: (1) Is not a ''significant regulatory action'' under Executive Order 12866; (2) is not a ''significant rule'' under DOT Regulatory Policies and Procedures (44 FR 11034; February 26, 1979); and (3) does not warrant preparation of a regulatory evaluation as the anticipated impact is so minimal. Since this is a routine matter that will only affect air traffic procedures and air navigation, it is certified that this rule, when promulgated, will not have a significant economic impact on a substantial number of small entities under the criteria of the Regulatory Flexibility Act.

The FAA's authority to issue rules regarding aviation safety is found in Title 49 of the U.S. Code. Subtitle 1, Section 106, describes the authority of the FAA Administrator. Subtitle VII, Aviation Programs, describes in more detail the scope of the agency's authority. This rulemaking is promulgated under the authority described in Subtitle VII, Part A, Subpart I, Section 40103. Under that section, the FAA is charged with prescribing regulations to assign the use of airspace necessary to ensure the safety of aircraft and the efficient use of airspace. This regulation is within the scope of that authority as it amends controlled airspace at Roy Hurd Memorial Airport, Monahans, TX.

List of Subjects in 14 CFR Part 71

Airspace, Incorporation by reference, Navigation (air).

Adoption of the Amendment

In consideration of the foregoing, the Federal Aviation Administration amends 14 CFR part 71 as follows:

PART 71—DESIGNATION OF CLASS A, B, C, D, AND E AIRSPACE AREAS; AIR TRAFFIC SERVICE ROUTES; AND REPORTING POINTS

■ 1. The authority citation for 14 CFR part 71 continues to read as follows:

Authority: 49 U.S.C. 106(g), 40103, 40113, 40120; E.O. 10854, 24 FR 9565, 3 CFR, 1959–1963 Comp., p. 389.

§ 71.1 [Amended]

■ 2. The incorporation by reference in 14 CFR 71.1 of the Federal Aviation Administration Order 7400.9V, Airspace Designations and Reporting Points, dated August 9, 2011, and effective September 15, 2011, is amended as follows:

Paragraph 6005 Class E airspace areas extending upward from 700 feet or more above the surface.

* * * * *

ASW TX E5 Monahans, TX [Amended]

Roy Hurd Memorial Airport, TX
(Lat. 31°34′57″ N., long. 102°54′33″ W.)
Wink VORTAC
(Lat. 31°52′29″ N., long. 103°14′38″ W.)

That airspace extending upward from 700 feet above the surface within a 6.4-mile radius of Roy Hurd Memorial Airport, and within 1.9 miles each side of the 127° bearing from the airport extending from the 6.4-mile radius to 9.8 miles southeast of the airport, and within 2 miles each side of the 307° bearing from the airport extending from the 6.4-mile radius to 9.6 miles northwest of the airport, and within 1.6 miles each side of the 136° radial of the Wink VORTAC extending from the 6.4-mile radius to 11 miles northwest of the airport.

Issued in Fort Worth, Texas, on May 10, 2012.

Walter L. Tweedy,

Acting Manager, Operations Support Group, ATO Central Service Center.

[FR Doc. 2012–12163 Filed 5–18–12; 8:45 am]

BILLING CODE 4910–13–P

DEPARTMENT OF TRANSPORTATION

Federal Aviation Administration

14 CFR Part 71

[Docket No. FAA–2011–0607; Airspace Docket No. 11–AGL–15]

Amendment of Class E Airspace; New Philadelphia, OH

AGENCY: Federal Aviation Administration (FAA), DOT.

ACTION: Final rule.

SUMMARY: This action amends Class E airspace at New Philadelphia, OH. Additional controlled airspace is necessary to accommodate new Area Navigation (RNAV) Standard Instrument Approach Procedures at Harry Clever Field. The geographic coordinates of the airport also are updated. The FAA is taking this action to enhance the safety and management of Instrument Flight Rule (IFR) operations at the airport.

DATES: *Effective date:* 0901 UTC, July 26, 2012. The Director of the Federal Register approves this incorporation by reference action under 1 CFR part 51, subject to the annual revision of FAA Order 7400.9 and publication of conforming amendments.

FOR FURTHER INFORMATION CONTACT: Scott Enander, Central Service Center, Operations Support Group, Federal Aviation Administration, Southwest Region, 2601 Meacham Blvd., Fort Worth, TX 76137; telephone 817–321–7716.

SUPPLEMENTARY INFORMATION:

History

On January 31, 2012, the FAA published in the **Federal Register** a notice of proposed rulemaking (NPRM) to amend Class E airspace for the New Philadelphia, OH, area, creating additional controlled airspace at Harry Clever Field (77 FR 4705) Docket No. FAA–2011–0607. Interested parties were invited to participate in this rulemaking effort by submitting written comments on the proposal to the FAA. No comments were received. Class E airspace designations are published in paragraph 6005 of FAA Order 7400.9V dated August 9, 2011, and effective September 15, 2011, which is incorporated by reference in 14 CFR 71.1. The Class E airspace designations listed in this document will be published subsequently in the Order.

The Rule

This action amends Title 14 Code of Federal Regulations (14 CFR) Part 71 by amending Class E airspace extending upward from 700 feet above the surface to accommodate new standard instrument approach procedures at Harry Clever Field, New Philadelphia, OH. This action is necessary for the safety and management of IFR operations at the airport. Also, the geographic coordinates of the airport are updated to coincide with the FAA's aeronautical database.

The FAA has determined that this regulation only involves an established body of technical regulations for which frequent and routine amendments are necessary to keep them operationally current. Therefore, this regulation: (1) Is not a ''significant regulatory action'' under Executive Order 12866; (2) is not a ''significant rule'' under DOT Regulatory Policies and Procedures (44 FR 11034; February 26, 1979); and (3) does not warrant preparation of a regulatory evaluation as the anticipated impact is so minimal. Since this is a routine matter that will only affect air traffic procedures and air navigation, it is certified that this rule, when promulgated, will not have a significant economic impact on a substantial number of small entities under the criteria of the Regulatory Flexibility Act.

The FAA's authority to issue rules regarding aviation safety is found in Title 49 of the U.S. Code. Subtitle 1, Section 106, describes the authority of the FAA Administrator. Subtitle VII, Aviation Programs, describes in more detail the scope of the agency's authority. This rulemaking is promulgated under the authority described in Subtitle VII, Part A, Subpart I, Section 40103. Under that section, the FAA is charged with prescribing regulations to assign the use of airspace necessary to ensure the safety of aircraft and the efficient use of airspace. This regulation is within the scope of that authority as it amends controlled airspace at Harry Clever Field, New Philadelphia, OH.

List of Subjects in 14 CFR Part 71

Airspace, Incorporation by reference, Navigation (air).

Adoption of the Amendment

In consideration of the foregoing, the Federal Aviation Administration amends 14 CFR part 71 as follows:

PART 71—DESIGNATION OF CLASS A, B, C, D, AND E AIRSPACE AREAS; AIR TRAFFIC SERVICE ROUTES; AND REPORTING POINTS

■ 1. The authority citation for 14 CFR part 71 continues to read as follows:

Authority: 49 U.S.C. 106(g), 40103, 40113, 40120; E.O. 10854, 24 FR 9565, 3 CFR, 1959–1963 Comp., p. 389.

§ 71.1 [Amended]

■ 2. The incorporation by reference in 14 CFR 71.1 of the Federal Aviation Administration Order 7400.9V, Airspace Designations and Reporting Points, dated August 9, 2011, and effective September 15, 2011, is amended as follows:

Paragraph 6005 Class E airspace areas extending upward from 700 feet or more above the surface.

* * * * *

AGL OH E5 New Philadelphia, OH [Amended]

Harry Clever Field Airport, OH
(Lat. 40′°2813″ N., long. 81°25′12″ W.)

That airspace extending upward from 700 feet above the surface within a 6.4-mile radius of Harry Clever Field Airport, and within 2 miles each side of the 319° bearing from the airport extending from the 6.4-mile radius to 11.2 miles northwest of the airport.

Issued in Fort Worth, Texas, on May 10, 2012.

Walter L. Tweedy,

Acting Manager, Operations Support Group, ATO Central Service Center.

[FR Doc. 2012–12101 Filed 5–18–12; 8:45 am]

BILLING CODE 4910–13–P

DEPARTMENT OF TRANSPORTATION

Federal Aviation Administration

14 CFR Part 71

[Docket No. FAA–2011–1403; Airspace Docket No. 11–AGL–29]

Amendment of Class E Airspace; Baraboo, WI

AGENCY: Federal Aviation Administration (FAA), DOT.

ACTION: Final rule.

SUMMARY: This action amends Class E airspace at Baraboo, WI. Additional controlled airspace is necessary to accommodate new Area Navigation (RNAV) Standard Instrument Approach Procedures at Reedsburg Municipal Airport. The geographic coordinates of the airport also are adjusted. The FAA is taking this action to enhance the safety and management of Instrument Flight Rule (IFR) operations at the airport. The Airspace Docket No. is corrected to 11–AGL–29.

DATES: Effective date: 0901 UTC, July 26, 2012. The Director of the Federal Register approves this incorporation by reference action under 1 CFR Part 51, subject to the annual revision of FAA Order 7400.9 and publication of conforming amendments.

FOR FURTHER INFORMATION CONTACT: Scott Enander, Central Service Center, Operations Support Group, Federal Aviation Administration, Southwest Region, 2601 Meacham Blvd., Fort Worth, TX 76137; telephone 817–321–7716.

SUPPLEMENTARY INFORMATION:

History

On January 31, 2012, the FAA published in the **Federal Register** a notice of proposed rulemaking (NPRM) to amend Class E airspace for the Baraboo, WI, area, creating additional controlled airspace at Reedsburg Municipal Airport (77 FR 4701) Docket No. FAA–2011–1403. Interested parties were invited to participate in this rulemaking effort by submitting written comments on the proposal to the FAA. No comments were received. Class E airspace designations are published in paragraph 6005 of FAA Order 7400.9V dated August 9, 2011, and effective September 15, 2011, which is incorporated by reference in 14 CFR 71.1. The Class E airspace designations listed in this document will be published subsequently in the Order. Subsequent to publication, it was discovered that the Airspace Docket No. was cited incorrectly. This action corrects the error.

The Rule

This action amends Title 14 Code of Federal Regulations (14 CFR) Part 71 by amending Class E airspace extending upward from 700 feet above the surface to accommodate new standard instrument approach procedures at Reedsburg Municipal Airport, Baraboo, WI. This action is necessary for the safety and management of IFR operations at the airport. Geographic coordinates are updated to coincide with the FAA's aeronautical database. This action also cites the correct Airspace Docket No. from 11–ASW–29 to 11–AGL–29.

The FAA has determined that this regulation only involves an established body of technical regulations for which frequent and routine amendments are necessary to keep them operationally current. Therefore, this regulation: (1) Is not a ''significant regulatory action'' under Executive Order 12866; (2) is not a ''significant rule'' under DOT Regulatory Policies and Procedures (44 FR 11034; February 26, 1979); and (3) does not warrant preparation of a regulatory evaluation as the anticipated impact is so minimal. Since this is a routine matter that will only affect air traffic procedures and air navigation, it is certified that this rule, when promulgated, will not have a significant economic impact on a substantial number of small entities under the criteria of the Regulatory Flexibility Act.

The FAA's authority to issue rules regarding aviation safety is found in Title 49 of the U.S. Code. Subtitle 1, Section 106, describes the authority of the FAA Administrator. Subtitle VII, Aviation Programs, describes in more detail the scope of the agency's authority. This rulemaking is promulgated under the authority described in Subtitle VII, Part A, Subpart I, Section 40103. Under that section, the FAA is charged with prescribing regulations to assign the use of airspace necessary to ensure the safety of aircraft and the efficient use of airspace. This regulation is within the scope of that authority as it amends controlled airspace at Reedsburg Municipal Airport, Baraboo, WI.

List of Subjects in 14 CFR Part 71

Airspace, Incorporation by reference, Navigation (air).

Adoption of the Amendment

In consideration of the foregoing, the Federal Aviation Administration amends 14 CFR part 71 as follows:

PART 71—DESIGNATION OF CLASS A, B, C, D, AND E AIRSPACE AREAS; AIR TRAFFIC SERVICE ROUTES; AND REPORTING POINTS

■ 1. The authority citation for 14 CFR part 71 continues to read as follows:

Authority: 49 U.S.C. 106(g), 40103, 40113, 40120; E.O. 10854, 24 FR 9565, 3 CFR, 1959–1963 Comp., p. 389.

§ 71.1 [Amended]

■ 2. The incorporation by reference in 14 CFR 71.1 of the Federal Aviation Administration Order 7400.9V, Airspace Designations and Reporting Points, dated August 9, 2011, and effective September 15, 2011, is amended as follows:

Paragraph 6005 Class E airspace areas extending upward from 700 feet or more above the surface.

* * * * *

AGL WI E5 Baraboo, WI [Amended]

Baraboo Wisconsin Dells Airport, WI
(Lat. 43°31′18″ N., long. 89°46′15″ W.)
Reedsburg Municipal Airport, WI
(Lat. 43°31′33″ N., long. 89°59′00″ W.)
Portage Municipal Airport, WI
(Lat. 43°33′37″ N., long. 89°28′58″ W.)

That airspace extending upward from 700 feet above the surface within a 9.6-mile radius of Baraboo Wisconsin Dells Airport, and within a 9.6-mile radius of Reedsburg Municipal Airport, and within 2 miles each side of the 180° bearing from Reedsburg Municipal Airport extending from the 9.6-mile radius to 10.5 miles south of the airport, and within an 8.7-mile radius of Portage Municipal Airport.

Issued in Fort Worth, Texas, on May 10, 2012.

Walter L. Tweedy,

Acting Manager, Operations Support Group, ATO Central Service Center.

[FR Doc. 2012–12167 Filed 5–18–12; 8:45 am]

BILLING CODE 4910–13–P

DEPARTMENT OF TRANSPORTATION

Federal Aviation Administration

14 CFR Part 71

[Docket No. FAA–2011–0426; Airspace Docket No. 11–ACE–7]

Establishment of Class E Airspace; Red Cloud, NE

AGENCY: Federal Aviation Administration (FAA), DOT.

ACTION: Final rule.

SUMMARY: This action establishes Class E airspace at Red Cloud, NE. Controlled airspace is necessary to accommodate new Area Navigation (RNAV) Standard Instrument Approach Procedures at Red Cloud Municipal Airport. The FAA is taking this action to enhance the safety and management of Instrument Flight Rule (IFR) operations at the airport.

DATES: *Effective date:* 0901 UTC, July 26, 2012. The Director of the Federal Register approves this incorporation by reference action under 1 CFR part 51, subject to the annual revision of FAA Order 7400.9 and publication of conforming amendments.

FOR FURTHER INFORMATION CONTACT: Scott Enander, Central Service Center, Operations Support Group, Federal Aviation Administration, Southwest Region, 2601 Meacham Blvd., Fort Worth, TX 76137; telephone 817–321–7716.

SUPPLEMENTARY INFORMATION:

History

On January 31, 2012, the FAA published in the **Federal Register** a notice of proposed rulemaking (NPRM) to amend Class E airspace for the Red Cloud, NE., area, creating additional controlled airspace at Red Cloud Municipal Airport (77 FR 4713) Docket No. FAA–2011–0426. Interested parties were invited to participate in this rulemaking effort by submitting written comments on the proposal to the FAA. No comments were received. Class E airspace designations are published in paragraph 6005 of FAA Order 7400.9V dated August 9, 2011, and effective September 15, 2011, which is incorporated by reference in 14 CFR 71.1. The Class E airspace designations listed in this document will be published subsequently in the Order.

The Rule

This action amends Title 14 Code of Federal Regulations (14 CFR) Part 71 by establishing Class E airspace extending upward from 700 feet above the surface to accommodate new standard instrument approach procedures at Red Cloud Municipal Airport, Red Cloud, NE. This action is necessary for the safety and management of IFR operations at the airport.

The FAA has determined that this regulation only involves an established body of technical regulations for which frequent and routine amendments are necessary to keep them operationally current. Therefore, this regulation: (1) Is not a ''significant regulatory action'' under Executive Order 12866; (2) is not a ''significant rule'' under DOT Regulatory Policies and Procedures (44 FR 11034; February 26, 1979); and (3) does not warrant preparation of a regulatory evaluation as the anticipated impact is so minimal. Since this is a routine matter that will only affect air traffic procedures and air navigation, it is certified that this rule, when promulgated, will not have a significant economic impact on a substantial number of small entities under the criteria of the Regulatory Flexibility Act.

The FAA's authority to issue rules regarding aviation safety is found in Title 49 of the U.S. Code. Subtitle 1, Section 106, describes the authority of the FAA Administrator. Subtitle VII, Aviation Programs, describes in more detail the scope of the agency's authority. This rulemaking is promulgated under the authority described in Subtitle VII, Part A, Subpart I, Section 40103. Under that section, the FAA is charged with prescribing regulations to assign the use of airspace necessary to ensure the safety of aircraft and the efficient use of airspace. This regulation is within the scope of that authority as it establishes controlled airspace at Red Cloud Municipal Airport, Red Cloud, NE.

List of Subjects in 14 CFR Part 71

Airspace, Incorporation by reference, Navigation (air).

Adoption of the Amendment

In consideration of the foregoing, the Federal Aviation Administration amends 14 CFR part 71 as follows:

PART 71—DESIGNATION OF CLASS A, B, C, D, AND E AIRSPACE AREAS; AIR TRAFFIC SERVICE ROUTES; AND REPORTING POINTS

■ 1. The authority citation for 14 CFR part 71 continues to read as follows:

Authority: 49 U.S.C. 106(g), 40103, 40113, 40120; E.O. 10854, 24 FR 9565, 3 CFR, 1959–1963 Comp., p. 389.

§ 71.1 [Amended]

■ 2. The incorporation by reference in 14 CFR 71.1 of the Federal Aviation Administration Order 7400.9V, Airspace Designations and Reporting Points, dated August 9, 2011, and effective September 15, 2011, is amended as follows:

Paragraph 6005 Class E airspace areas extending upward from 700 feet or more above the surface.

* * * * *

ACE NE E5 Red Cloud, NE [New]

Red Cloud Municipal Airport, NE
(Lat. 40°04′56″ N., long. 98°32′29″ W.)

That airspace extending upward from 700 feet above the surface within a 7.4-mile radius of Red Cloud Municipal Airport.

Issued in Fort Worth, Texas, on May 10, 2012.

Walter L. Tweedy,

Acting Manager, Operations Support Group, ATO Central Service Center.

[FR Doc. 2012–12082 Filed 5–18–12; 8:45 am]

BILLING CODE 4910–13–P

DEPARTMENT OF TRANSPORTATION

Federal Aviation Administration

14 CFR Part 71

[Docket No. FAA–2011–0749; Airspace Docket No. 11–ACE–15]

Establishment of Class E Airspace; Branson West, MO

AGENCY: Federal Aviation Administration (FAA), DOT.

ACTION: Final rule.

SUMMARY: This action establishes Class E airspace at Branson West, MO, to accommodate new Area Navigation (RNAV) Standard Instrument Approach Procedures at Branson West Municipal-Emerson Field Airport. The FAA is taking this action to enhance the safety and management of Instrument Flight Rule (IFR) operations at the airport.

DATES: *Effective date:* 0901 UTC, July 26, 2012. The Director of the Federal Register approves this incorporation by reference action under 1 CFR part 51, subject to the annual revision of FAA

Order 7400.9 and publication of conforming amendments.

FOR FURTHER INFORMATION CONTACT: Scott Enander, Central Service Center, Operations Support Group, Federal Aviation Administration, Southwest Region, 2601 Meacham Blvd., Fort Worth, TX 76137; telephone 817–321–7716.

SUPPLEMENTARY INFORMATION:

History

On January 31, 2012, the FAA published in the **Federal Register** a notice of proposed rulemaking (NPRM) to establish Class E airspace at Branson West Municipal-Emerson Field Airport, Branson West, MO (77 FR 4709) Docket No. FAA–2011–0749. Interested parties were invited to participate in this rulemaking effort by submitting written comments on the proposal to the FAA. No comments were received. Class E airspace designations are published in paragraph 6005 of FAA Order 7400.9V dated August 9, 2011, and effective September 15, 2011, which is incorporated by reference in 14 CFR 71.1. The Class E airspace designations listed in this document will be published subsequently in the Order.

The Rule

This action amends Title 14 Code of Federal Regulations (14 CFR) Part 71 by establishing Class E airspace extending upward from 700 feet above the surface at Branson West Municipal-Emerson Field Airport, Branson West, MO. Controlled airspace is necessary to accommodate new standard instrument approach procedures at Branson West Municipal-Emerson Field Airport, and for the safety and management of IFR operations at the airport.

The FAA has determined that this regulation only involves an established body of technical regulations for which frequent and routine amendments are necessary to keep them operationally current. Therefore, this regulation: (1) Is not a ''significant regulatory action'' under Executive Order 12866; (2) is not a ''significant rule'' under DOT Regulatory Policies and Procedures (44 FR 11034; February 26, 1979); and (3) does not warrant preparation of a regulatory evaluation as the anticipated impact is so minimal. Since this is a routine matter that will only affect air traffic procedures and air navigation, it is certified that this rule, when promulgated, will not have a significant economic impact on a substantial number of small entities under the criteria of the Regulatory Flexibility Act.

The FAA's authority to issue rules regarding aviation safety is found in Title 49 of the U.S. Code. Subtitle 1, Section 106, describes the authority of the FAA Administrator. Subtitle VII, Aviation Programs, describes in more detail the scope of the agency's authority. This rulemaking is promulgated under the authority described in Subtitle VII, Part A, Subpart I, Section 40103. Under that section, the FAA is charged with prescribing regulations to assign the use of airspace necessary to ensure the safety of aircraft and the efficient use of airspace. This regulation is within the scope of that authority as it establishes controlled airspace at Branson West Municipal-Emerson Field Airport, Branson West, MO.

List of Subjects in 14 CFR Part 71

Airspace, Incorporation by reference, Navigation (air).

Adoption of the Amendment

In consideration of the foregoing, the Federal Aviation Administration amends 14 CFR part 71 as follows:

PART 71—DESIGNATION OF CLASS A, B, C, D, AND E AIRSPACE AREAS; AIR TRAFFIC SERVICE ROUTES; AND REPORTING POINTS

■ 1. The authority citation for 14 CFR part 71 continues to read as follows:

Authority: 49 U.S.C. 106(g), 40103, 40113, 40120; E.O. 10854, 24 FR 9565, 3 CFR, 1959–1963 Comp., p. 389.

§ 71.1 [Amended]

■ 2. The incorporation by reference in 14 CFR 71.1 of the Federal Aviation Administration Order 7400.9V, Airspace Designations and Reporting Points, dated August 9, 2011, and effective September 15, 2011, is amended as follows:

Paragraph 6005 Class E airspace areas extending upward from 700 feet or more above the surface.

* * * * *

ACE MO E5 Branson West, MO [New]

Branson West Municipal—Emerson Field Airport, MO
(Lat. 36°41′55″ N., long. 93°24′08″ W.)

That airspace extending upward from 700 feet above the surface within a 6.4-mile radius of Branson West Municipal—Emerson Field Airport.

Issued in Fort Worth, Texas, on May 10, 2012.

Walter L. Tweedy,

Acting Manager, Operations Support Group, ATO Central Service Center.

[FR Doc. 2012–12103 Filed 5–18–12; 8:45 am]

BILLING CODE 4910–13–P

DEPARTMENT OF TRANSPORTATION

Federal Aviation Administration

14 CFR Part 71

[Docket No. FAA–2011–1103; Airspace Docket No. 11–ACE–14]

Establishment of Class E Airspace; Pender, NE

AGENCY: Federal Aviation Administration (FAA), DOT.

ACTION: Final rule.

SUMMARY: This action establishes Class E airspace at Pender, NE. Controlled airspace is necessary to accommodate new Area Navigation (RNAV) Standard Instrument Approach Procedures at Pender Municipal Airport. The FAA is taking this action to enhance the safety and management of Instrument Flight Rule (IFR) operations at the airport.

DATES: *Effective date:* 0901 UTC, July 26, 2012. The Director of the Federal Register approves this incorporation by reference action under 1 CFR part 51, subject to the annual revision of FAA Order 7400.9 and publication of conforming amendments.

FOR FURTHER INFORMATION CONTACT: Scott Enander, Central Service Center, Operations Support Group, Federal Aviation Administration, Southwest Region, 2601 Meacham Blvd., Fort Worth, TX 76137; telephone 817–321–7716.

SUPPLEMENTARY INFORMATION:

History

On January 31, 2012, the FAA published in the **Federal Register** a notice of proposed rulemaking (NPRM) to establish Class E airspace at Pender Municipal Airport, Pender, NE (77 FR 4712) Docket No. FAA–2011–1103. Interested parties were invited to participate in this rulemaking effort by submitting written comments on the proposal to the FAA. No comments were received. Class E airspace designations are published in paragraph 6005 of FAA Order 7400.9V dated August 9, 2011, and effective September 15, 2011, which is incorporated by reference in 14 CFR 71.1. The Class E airspace designations listed in this document will be published subsequently in the Order.

The Rule

This action amends Title 14 Code of Federal Regulations (14 CFR) Part 71 by establishing Class E airspace extending upward from 700 feet above the surface to accommodate new standard instrument approach procedures at

Pender Municipal Airport, Pender, NE. This action is necessary for the safety and management of IFR operations at the airport.

The FAA has determined that this regulation only involves an established body of technical regulations for which frequent and routine amendments are necessary to keep them operationally current. Therefore, this regulation: (1) Is not a ''significant regulatory action'' under Executive Order 12866; (2) is not a ''significant rule'' under DOT Regulatory Policies and Procedures (44 FR 11034; February 26, 1979); and (3) does not warrant preparation of a regulatory evaluation as the anticipated impact is so minimal. Since this is a routine matter that will only affect air traffic procedures and air navigation, it is certified that this rule, when promulgated, will not have a significant economic impact on a substantial number of small entities under the criteria of the Regulatory Flexibility Act.

The FAA's authority to issue rules regarding aviation safety is found in Title 49 of the U.S. Code. Subtitle 1, Section 106, describes the authority of the FAA Administrator. Subtitle VII, Aviation Programs, describes in more detail the scope of the agency's authority. This rulemaking is promulgated under the authority described in Subtitle VII, Part A, Subpart I, Section 40103. Under that section, the FAA is charged with prescribing regulations to assign the use of airspace necessary to ensure the safety of aircraft and the efficient use of airspace. This regulation is within the scope of that authority as it establishes controlled airspace at Pender Municipal Airport, Pender, NE.

List of Subjects in 14 CFR Part 71

Airspace, Incorporation by reference, Navigation (air).

Adoption of the Amendment

In consideration of the foregoing, the Federal Aviation Administration amends 14 CFR part 71 as follows:

PART 71—DESIGNATION OF CLASS A, B, C, D, AND E AIRSPACE AREAS; AIR TRAFFIC SERVICE ROUTES; AND REPORTING POINTS

■ 1. The authority citation for 14 CFR part 71 continues to read as follows:

Authority: 49 U.S.C. 106(g), 40103, 40113, 40120; E.O. 10854, 24 FR 9565, 3 CFR, 1959–1963 Comp., p. 389.

§ 71.1 [Amended]

■ 2. The incorporation by reference in 14 CFR 71.1 of the Federal Aviation Administration Order 7400.9V, Airspace Designations and Reporting Points, dated August 9, 2011, and effective September 15, 2011, is amended as follows:

Paragraph 6005 Class E airspace areas extending upward from 700 feet or more above the surface.

* * * * *

ACE NE E5 Pender, NE [New]

Pender Municipal Airport, NE
(Lat. 42°06′48″ N., long. 96°43′40″ W.)

That airspace extending upward from 700 feet above the surface within a 6.3-mile radius of Pender Municipal Airport.

Issued in Fort Worth, Texas, on May 10, 2012.

Walter L. Tweedy,

Acting Manager, Operations Support Group, ATO Central Service Center.

[FR Doc. 2012–12104 Filed 5–18–12; 8:45 am]

BILLING CODE 4910–13–P

DEPARTMENT OF TRANSPORTATION

Federal Aviation Administration

14 CFR Part 71

[Docket No. FAA–2011–1104; Airspace Docket No. 11–ACE–21]

Establishment of Class E Airspace; Eldon, MO

AGENCY: Federal Aviation Administration (FAA), DOT.

ACTION: Final rule.

SUMMARY: This action establishes Class E airspace at Eldon, MO. Controlled airspace is necessary to accommodate new Area Navigation (RNAV) Standard Instrument Approach Procedures at Eldon Model Airpark. The FAA is taking this action to enhance the safety and management of Instrument Flight Rule (IFR) operations at the airport.

DATES: *Effective date:* 0901 UTC, July 26, 2012. The Director of the Federal Register approves this incorporation by reference action under 1 CFR part 51, subject to the annual revision of FAA Order 7400.9 and publication of conforming amendments.

FOR FURTHER INFORMATION CONTACT: Scott Enander, Central Service Center, Operations Support Group, Federal Aviation Administration, Southwest Region, 2601 Meacham Blvd., Fort Worth, TX 76137; telephone 817–321–7716.

SUPPLEMENTARY INFORMATION:

History

On January 31, 2012, the FAA published in the **Federal Register** a notice of proposed rulemaking (NPRM) to establish Class E airspace at Eldon Model Airpark, Eldon, MO (77 FR 4710) Docket No. FAA–2011–1104. Interested parties were invited to participate in this rulemaking effort by submitting written comments on the proposal to the FAA. No comments were received. Class E airspace designations are published in paragraph 6005 of FAA Order 7400.9V dated August 9, 2011, and effective September 15, 2011, which is incorporated by reference in 14 CFR 71.1. The Class E airspace designations listed in this document will be published subsequently in the Order.

The Rule

This action amends Title 14 Code of Federal Regulations (14 CFR) Part 71 by establishing Class E airspace extending upward from 700 feet above the surface to accommodate new standard instrument approach procedures at Eldon Model Airpark, Eldon, MO. This action is necessary for the safety and management of IFR operations at the airport.

The FAA has determined that this regulation only involves an established body of technical regulations for which frequent and routine amendments are necessary to keep them operationally current. Therefore, this regulation: (1) Is not a ''significant regulatory action'' under Executive Order 12866; (2) is not a ''significant rule'' under DOT Regulatory Policies and Procedures (44 FR 11034; February 26, 1979); and (3) does not warrant preparation of a regulatory evaluation as the anticipated impact is so minimal. Since this is a routine matter that will only affect air traffic procedures and air navigation, it is certified that this rule, when promulgated, will not have a significant economic impact on a substantial number of small entities under the criteria of the Regulatory Flexibility Act.

The FAA's authority to issue rules regarding aviation safety is found in Title 49 of the U.S. Code. Subtitle 1, Section 106, describes the authority of the FAA Administrator. Subtitle VII, Aviation Programs, describes in more detail the scope of the agency's authority. This rulemaking is promulgated under the authority described in Subtitle VII, Part A, Subpart I, Section 40103. Under that section, the FAA is charged with prescribing regulations to assign the use of airspace necessary to ensure the safety of aircraft and the efficient use of airspace. This regulation is within the scope of that authority as it establishes controlled airspace at Eldon Model Airpark, Eldon, MO.

List of Subjects in 14 CFR Part 71

Airspace, Incorporation by reference, Navigation (air).

Adoption of the Amendment

In consideration of the foregoing, the Federal Aviation Administration amends 14 CFR part 71 as follows:

PART 71—DESIGNATION OF CLASS A, B, C, D, AND E AIRSPACE AREAS; AIR TRAFFIC SERVICE ROUTES; AND REPORTING POINTS

■ 1. The authority citation for 14 CFR part 71 continues to read as follows:

Authority: 49 U.S.C. 106(g), 40103, 40113, 40120; E.O. 10854, 24 FR 9565, 3 CFR, 1959–1963 Comp., p. 389.

§ 71.1 [Amended]

■ 2. The incorporation by reference in 14 CFR 71.1 of the Federal Aviation Administration Order 7400.9V, Airspace Designations and Reporting Points, dated August 9, 2011, and effective September 15, 2011, is amended as follows:

Paragraph 6005 Class E airspace areas extending upward from 700 feet or more above the surface.

* * * * *

ACE MO E5 Eldon, MO [New]

Eldon Model Airpark, MO
(Lat. 38°21′38″ N., long. 92°34′17″ W.)

That airspace extending upward from 700 feet above the surface within a 6.4-mile radius of Eldon Model Airpark.

Issued in Fort Worth, Texas, on May 10, 2012.

Walter L. Tweedy,

Acting Manager, Operations Support Group, ATO Central Service Center.

[FR Doc. 2012–12102 Filed 5–18–12; 8:45 am]

BILLING CODE 4910–13–P

DEPARTMENT OF TRANSPORTATION

Federal Aviation Administration

14 CFR Part 71

[Docket No. FAA–2011–0904; Airspace Docket No. 11–ASW–12]

Establishment of Class E Airspace; Freer, TX

AGENCY: Federal Aviation Administration (FAA), DOT.

ACTION: Final rule.

SUMMARY: This action establishes Class E airspace at Freer, TX. Controlled airspace is necessary to accommodate new Area Navigation (RNAV) Standard Instrument Approach Procedures at Seven C's Ranch Airport. The FAA is taking this action to enhance the safety and management of Instrument Flight Rule (IFR) operations at the airport.

DATES: *Effective date:* 0901 UTC, July 26, 2012. The Director of the Federal Register approves this incorporation by reference action under 1 CFR part 51, subject to the annual revision of FAA Order 7400.9 and publication of conforming amendments.

FOR FURTHER INFORMATION CONTACT: Scott Enander, Central Service Center, Operations Support Group, Federal Aviation Administration, Southwest Region, 2601 Meacham Blvd., Fort Worth, TX 76137; telephone 817–321–7716.

SUPPLEMENTARY INFORMATION:

History

On January 31, 2012, the FAA published in the **Federal Register** a notice of proposed rulemaking (NPRM) to amend Class E airspace for the Freer, TX, area, creating additional controlled airspace at Seven C's Ranch Airport (77 FR 4700) Docket No. FAA–2011–0904. Interested parties were invited to participate in this rulemaking effort by submitting written comments on the proposal to the FAA. No comments were received. Class E airspace designations are published in paragraph 6005 of FAA Order 7400.9V dated August 9, 2011, and effective September 15, 2011, which is incorporated by reference in 14 CFR 71.1. The Class E airspace designations listed in this document will be published subsequently in the Order.

The Rule

This action amends Title 14 Code of Federal Regulations (14 CFR) Part 71 by establishing Class E airspace extending upward from 700 feet above the surface to accommodate new standard instrument approach procedures at Seven C's Ranch Airport, Freer, TX. This action is necessary for the safety and management of IFR operations at the airport.

The FAA has determined that this regulation only involves an established body of technical regulations for which frequent and routine amendments are necessary to keep them operationally current. Therefore, this regulation: (1) Is not a ''significant regulatory action'' under Executive Order 12866; (2) is not a ''significant rule'' under DOT Regulatory Policies and Procedures (44 FR 11034; February 26, 1979); and (3) does not warrant preparation of a regulatory evaluation as the anticipated impact is so minimal. Since this is a routine matter that will only affect air traffic procedures and air navigation, it is certified that this rule, when promulgated, will not have a significant economic impact on a substantial number of small entities under the criteria of the Regulatory Flexibility Act.

The FAA's authority to issue rules regarding aviation safety is found in Title 49 of the U.S. Code. Subtitle 1, Section 106, describes the authority of the FAA Administrator. Subtitle VII, Aviation Programs, describes in more detail the scope of the agency's authority. This rulemaking is promulgated under the authority described in Subtitle VII, Part A, Subpart I, Section 40103. Under that section, the FAA is charged with prescribing regulations to assign the use of airspace necessary to ensure the safety of aircraft and the efficient use of airspace. This regulation is within the scope of that authority as it establishes controlled airspace at Seven C's Ranch Airport, Freer, TX.

List of Subjects in 14 CFR Part 71

Airspace, Incorporation by reference, Navigation (air).

Adoption of the Amendment

In consideration of the foregoing, the Federal Aviation Administration amends 14 CFR part 71 as follows:

PART 71—DESIGNATION OF CLASS A, B, C, D, AND E AIRSPACE AREAS; AIR TRAFFIC SERVICE ROUTES; AND REPORTING POINTS

■ 1. The authority citation for 14 CFR part 71 continues to read as follows:

Authority: 49 U.S.C. 106(g), 40103, 40113, 40120; E.O. 10854, 24 FR 9565, 3 CFR, 1959–1963 Comp., p. 389.

§ 71.1 [Amended]

■ 2. The incorporation by reference in 14 CFR 71.1 of the Federal Aviation Administration Order 7400.9V, Airspace Designations and Reporting Points, dated August 9, 2011, and effective September 15, 2011, is amended as follows:

Paragraph 6005 Class E airspace areas extending upward from 700 feet or more above the surface.

* * * * *

ASW TX E5 Freer, TX [New]

Seven C's Ranch Airport, TX
(Lat. 27°59′49″ N., long. 98°52′56″ W.)

That airspace extending upward from 700 feet above the surface within a 6.7-mile radius of Seven C's Ranch Airport, and within 2 miles each side of the 153° bearing from the airport extending from the 6.7-mile radius to 11.1 miles southeast of the airport, excluding that airspace within Restricted Area R–6312.

Issued in Fort Worth, Texas, on May 11, 2012.

Walter L. Tweedy,

Acting Manager, Operations Support Group, ATO Central Service Center.

[FR Doc. 2012–12170 Filed 5–18–12; 8:45 am]

BILLING CODE 4910–13–P

DEPARTMENT OF TRANSPORTATION

Federal Aviation Administration

14 CFR Part 71

[Docket No. FAA–2011–0903; Airspace Docket No. 11–ACE–20]

Establishment of Class E Airspace; Houston, MO

AGENCY: Federal Aviation Administration (FAA), DOT.

ACTION: Final rule.

SUMMARY: This action establishes Class E airspace at Houston, MO. Controlled airspace is necessary to accommodate new Area Navigation (RNAV) Standard Instrument Approach Procedures at Houston Memorial Airport. The FAA is taking this action to enhance the safety and management of Instrument Flight Rule (IFR) operations at the airport.

DATES: *Effective date:* 0901 UTC, July 26, 2012. The Director of the Federal Register approves this incorporation by reference action under 1 CFR part 51, subject to the annual revision of FAA Order 7400.9 and publication of conforming amendments.

FOR FURTHER INFORMATION CONTACT: Scott Enander, Central Service Center, Operations Support Group, Federal Aviation Administration, Southwest Region, 2601 Meacham Blvd., Fort Worth, TX 76137; telephone 817–321–7716.

SUPPLEMENTARY INFORMATION:

History

On January 31, 2012, the FAA published in the **Federal Register** a notice of proposed rulemaking (NPRM) to establish Class E airspace for the Houston, MO, area, creating controlled airspace at Houston Memorial Airport (77 FR 4711) Docket No. FAA–2011–0903. Interested parties were invited to participate in this rulemaking effort by submitting written comments on the proposal to the FAA. No comments were received. Class E airspace designations are published in paragraph 6005 of FAA Order 7400.9V dated August 9, 2011, and effective September 15, 2011, which is incorporated by reference in 14 CFR 71.1. The Class E airspace designations listed in this document will be published subsequently in the Order.

The Rule

This action amends Title 14 Code of Federal Regulations (14 CFR) Part 71 by establishing Class E airspace extending upward from 700 feet above the surface to accommodate new standard instrument approach procedures at Houston Memorial Airport, Houston, MO. This action is necessary for the safety and management of IFR operations at the airport.

The FAA has determined that this regulation only involves an established body of technical regulations for which frequent and routine amendments are necessary to keep them operationally current. Therefore, this regulation: (1) Is not a ''significant regulatory action'' under Executive Order 12866; (2) is not a ''significant rule'' under DOT Regulatory Policies and Procedures (44 FR 11034; February 26, 1979); and (3) does not warrant preparation of a regulatory evaluation as the anticipated impact is so minimal. Since this is a routine matter that will only affect air traffic procedures and air navigation, it is certified that this rule, when promulgated, will not have a significant economic impact on a substantial number of small entities under the criteria of the Regulatory Flexibility Act.

The FAA's authority to issue rules regarding aviation safety is found in Title 49 of the U.S. Code. Subtitle 1, Section 106, describes the authority of the FAA Administrator. Subtitle VII, Aviation Programs, describes in more detail the scope of the agency's authority. This rulemaking is promulgated under the authority described in Subtitle VII, Part A, Subpart I, Section 40103. Under that section, the FAA is charged with prescribing regulations to assign the use of airspace necessary to ensure the safety of aircraft and the efficient use of airspace. This regulation is within the scope of that authority as it establishes controlled airspace at Houston Memorial Airport, Houston, MO.

List of Subjects in 14 CFR Part 71

Airspace, Incorporation by reference, Navigation (air).

Adoption of the Amendment

In consideration of the foregoing, the Federal Aviation Administration amends 14 CFR part 71 as follows:

PART 71—DESIGNATION OF CLASS A, B, C, D, AND E AIRSPACE AREAS; AIR TRAFFIC SERVICE ROUTES; AND REPORTING POINTS

■ 1. The authority citation for 14 CFR part 71 continues to read as follows:

Authority: 49 U.S.C. 106(g), 40103, 40113, 40120; E.O. 10854, 24 FR 9565, 3 CFR, 1959–1963 Comp., p. 389.

§ 71.1 [Amended]

■ 2. The incorporation by reference in 14 CFR 71.1 of the Federal Aviation Administration Order 7400.9V, Airspace Designations and Reporting Points, dated August 9, 2011, and effective September 15, 2011, is amended as follows:

Paragraph 6005 Class E airspace areas extending upward from 700 feet or more above the surface.

* * * * *

ACE MO E5 Houston, MO [New]

Houston Memorial Airport, MO
(Lat. 37°19′49″ N., long. 91°58′23″ W.)

That airspace extending upward from 700 feet above the surface within a 7.6-mile radius of Houston Memorial Airport.

Issued in Fort Worth, Texas, on May 10, 2012.

Walter L. Tweedy,

Acting Manager, Operations Support Group, ATO Central Service Center.

[FR Doc. 2012–12085 Filed 5–18–12; 8:45 am]

BILLING CODE 4910–13–P

DEPARTMENT OF COMMERCE

International Trade Administration

19 CFR Part 351

[Docket No. 110315198–1622–02]

RIN 0625–AA86

Modification to Regulation Concerning the Revocation of Antidumping and Countervailing Duty Orders

AGENCY: Import Administration, International Trade Administration, Department of Commerce.

ACTION: Final rule.

SUMMARY: The Department of Commerce (the Department) is amending its regulations concerning the revocation of antidumping and countervailing duty orders in whole or in part, and the termination of suspended antidumping and countervailing duty investigations. This rule eliminates the provision for revocation of an antidumping or countervailing duty order with respect to individual exporters or producers

based on those individual exporters or producers having received antidumping rates of zero for three consecutive years, or countervailing duty rates of zero for five consecutive years.

DATES: This Final Rule is effective June 20, 2012. This rule will apply to all reviews that are initiated on or after June 20, 2012.

FOR FURTHER INFORMATION CONTACT: James Maeder at (202) 482–3330, Mark Ross at (202) 482–4794, or Jonathan Zielinski at (202) 482–4384.

SUPPLEMENTARY INFORMATION:

Background

On March 21, 2011, the Department published a proposed rule entitled ''Proposed Modification to Regulation Concerning the Revocation of Antidumping and Countervailing Duty Orders'' that would modify its regulations concerning the revocation of antidumping and countervailing duty orders. (76 FR 15233). The *Proposed Rule* detailed proposed changes to the Department's regulations that provide for revocation of antidumping and countervailing duty orders. Certain parties commented on the *Proposed Rule,* and the Department has addressed those comments in the section below entitled ''Response to Comments on the *Proposed Rule''.*

After analyzing and carefully considering all of the comments that the Department received in response to the *Proposed Rule,* the Department is adopting the proposed changes and is amending its regulations to eliminate the provision for revocation of an antidumping or countervailing duty order with respect to individual exporters or producers based on those individual exporters or producers having received antidumping rates of zero for three consecutive years, or countervailing duty rates of zero for five consecutive years. The *Proposed Rule,* comments received, and this Final Rule can be accessed using the Federal eRulemaking Portal at *http://www.regulations.gov* under Docket Number ITA–2011–0001.

Explanation of Changes to 19 CFR 351.222

To implement this rule, the Department is removing 19 CFR 351.222(b)(2) and (3) (dumping) and 351.222(c)(3) and (4) (countervailable subsidy), and is making conforming changes as necessary to the remaining paragraphs of 19 CFR 351.222. In addition, the Department is amending 19 CFR 351.222(f)(2) to make it clear that a request for revocation that does not conform with the requirements of paragraph (e) does not require the Secretary to undertake the actions provided for in paragraphs (f)(2)(i) through (f)(2)(vi). The Department also is correcting a grammatical error in the third sentence of 19 CFR 351.222(a) (changing ''have'' to ''has'') and deleting 19 CFR 351.222(m) (a provision related to the Uruguay Round Agreements Act that is no longer applicable). Finally, the Department is correcting a typographical error in § 351.222(e)(1)(i) that was identified in comments on the *Proposed Rule* (changed ''the person'' to ''they''). The Department is retaining, with some conforming changes, the sections of 19 CFR 351.222 that regard revocations of orders in whole. The Department is not making any changes with respect to revocations as described under paragraphs (g) through (l) of 19 CFR 351.222.

Response to Comments on the Proposed Rule

The Department received numerous comments on the *Proposed Rule.* As indicated in the ''Background'' section, these comments can be accessed using the Federal eRulemaking Portal at *http://www.regulations.gov* under Docket Number ITA–2011–0001. The Department analyzed and carefully considered all of the comments received. Below is a summary of the comments, grouped by issue category and followed by the Department's response.

Comment 1—U.S. Law, the WTO Agreements, and Company-Specific Revocations

Some commenters assert that the use of the word ''may'' in Section 751(d)(l) of the Tariff Act of 1930, as amended (the ''Act''), makes it clear that Congress fully delegated to the Department the authority to prescribe the specific conditions under which revocation of an order, whether in whole or in part, is appropriate. Some commenters also assert that, given the availability of revocation and termination in whole or in part in changed circumstances reviews and in whole in five-year sunset reviews, respondents seeking relief from antidumping or countervailing duties have more than ample opportunity to achieve that goal without the company-specific avenue contained in 19 CFR 351.222(b)(2) and (b)(3) and 351.222(c)(3) and (c)(4). Further, in addition to not being required by U.S. law, some parties assert that the company-specific revocation provisions are not required by any of the relevant WTO agreements. These parties assert that the WTO dispute settlement panel in *United States—Anti-Dumping Measures on Oil Country Tubular Goods,* paragraph 7.166, WT/DS282/R (adopted June 20, 2005) found that 19 CFR 351.222(b)(2) of the Department's regulations was not required by the United States' WTO obligations because there was an opportunity for foreign companies to request revocation under the changed circumstances review provisions (*i.e.,* 19 CFR 351.222(g)).

Some commenters suggest that further cost savings can be attained by withdrawing the regulations providing for country-wide revocations at 19 CFR 351.222(b)(l) (dumping) and 351.222(c)(1) and (2) (subsidies). They assert that, because as part of a sunset review the Department already considers whether there has been continued dumping or subsidies after issuance of an order, there is no compelling need to maintain the company-specific and country-wide revocation procedures set forth at 19 CFR 351.222(b) and (c).

One commenter asserts that when a company demonstrates that it has not dumped its products over a certain period of time, the statue no longer justifies binding that company to costly administrative reviews. Another party asserts that the statute calls for revocation ''in whole or in part'' based on administrative review results, and that this is evidence of the drafters' intent to allow for other means of revocation besides termination of the order itself. One party asserted that the proposed rule, if implemented, would essentially eliminate the only viable opportunity for revocation for individual exporters/producers. Several commenters note that company-specific revocations have been a practice for many years and assert that parties have relied upon that practice in the expectation of being granted a revocation in part.

One commenter asserts that the additional risk inherent in the U.S. retrospective system is partly offset by the possibility of revocation, and requests that the Department take this into account in assessing whether to eliminate company-specific revocations of antidumping and countervailing duty orders. One party proposes that the Department's current revocation provisions remain in effect for developing countries as a form of special and differential treatment per Article 15 of the Antidumping Agreement and Article 27 of the Agreement on Subsidies and Countervailing measures. Another commenter contends that pursuant to Articles 11 of the Antidumping Agreement, WTO members can only continue an antidumping duty order ''to

the extent necessary'' to ''counteract dumping'' and must consider the request of ''any interested party'' to ''examine whether the continued imposition of the duty is necessary to offset dumping.'' Citing *Amended Regulation Concerning the Revocation of Antidumping and Countervailing Duty Orders; Final Rule,* 64 FR 51226 (September 22, 1999), the party asserts that in that **Federal Register** notice the Department concluded that Article 11.2 of the Antidumping Agreement requires the Department to revoke an antidumping order for any exporter who demonstrates the absence of dumping for three years, provided there is no evidence of record to the contrary. One party asserts that the Department vigorously defended company-specific revocations pursuant to Article 11 of the Antidumping Agreement in WTO litigation (citing report of WTO Panel, *United States—Antidumping duty on Dynamic Random Access Memory Semiconductors from Korea,* WT/DS99/R (adopted March 19, 1999) (DRAMS).

Response to Comments: Company-specific revocations are not required by U.S. law, and thus, the elimination of such revocations is consistent with U.S. law. Section 751(d)(1) of the Act states, in relevant part, that the Department ''may revoke, in whole or in part * * * .'' an antidumping or countervailing duty order. As several parties note, the use of the word ''may'' indicates that revocations under this section of the Act, whether in whole or in part, are not required. Because the authority for company-specific revocations derives from section 751(d)(1) of the Act, those types of revocations are not mandatory.

We agree that section 751(d)(1) of the Act permits revocations other than revocation of an order in whole, *i.e.,* the provision permits the Department to revoke an order in part. The Act does not, however, define what it means to revoke an order in part. *See Sahaviriya Steel Ind. Pub Co. Ltd.* v. *United States, No. 2010,* slip op. at 9–10 (Fed. Cir. June 17, 2011). The Department has the discretion to interpret this provision, and is not required to interpret it to include company-specific revocations. The *Proposed Rule* does not affect other types of revocations in part. For example, orders may continue to be revoked in part if a party demonstrates a lack of interest in maintaining the order on a certain type of subject merchandise by substantially all of the domestic industry. *See, e.g., Certain Pasta from Italy; Final Results of Countervailing Duty Changed Circumstances Review and Revocation, In Part,* 76 FR 27634 (May 12, 2011).

Regarding the comment from several parties that company-specific revocations have been a practice for many years and that parties have relied upon that practice in the expectation of being granted a revocation in part, the age of a practice does not affect the legality of its elimination. Rather, the Department has the authority to change its practice at any time provided that it gives a reasoned explanation for its change. *See Allegheny Ludlum Corp.* v. *United States,* 346 F.3d 1368, 1373 (Fed. Cir. 2003) (*Allegheny Ludlum*). In the *Proposed Rule* and the below sections entitled ''Comment 2—Whether the Department Provided a Reasoned Analysis for the Proposed Rule'' and ''Comment 4—Reasons for Discontinuing Company-Specific Revocations'', the Department further explains its rationale for eliminating company-specific revocations. Moreover, the Department has provided parties ample notice of the change and opportunity to comment, and took those comments into consideration for this Final Rule. In any event, the statute and the regulation make clear that revocation is discretionary.

Regarding the comments from several parties that the *Proposed Rule* would be contrary to the United States' obligations under the Antidumping Agreement, we disagree. We note that the Act ''is intended to bring U.S. law fully into compliance with U.S. obligations under [the WTO Agreements].'' *See SAA accompanying the URAA,* HR Doc 316, Vol. 1, 103d Cong (1994) at 669. And, as explained above, U.S. law does not require company-specific revocations. Moreover, there is nothing in Article 11 of the Antidumping Agreement that requires company-specific revocations. We also note that the Department is not eliminating its practice, as codified in its regulations, of revoking an order in whole based on the absence of dumping.

Regarding the argument that the Department defended company-specific revocations pursuant to Article 11 of the Antidumping Agreement in the DRAMS dispute, that dispute concerned the evidence that could be relied upon in determining whether revocation was proper. The Department's regulation at the time required it to determine that sales of subject merchandise at below normal value in the future were not likely. The Panel considered whether this ''not likely'' standard was consistent with the requirements of Article 11.2 of the Antidumping Agreement, and determined that it was not. This dispute was not about whether company-specific revocations were required by the Antidumping Agreement, and the Panel's findings did not involve that issue.

Finally, with regard to the suggestion that the company-specific revocation regulations remain in effect for developing countries as a form of special and differential treatment per Article 15 of the Antidumping Agreement and Article 27 of the Agreement on Subsidies and Countervailing measures, neither Article requires company-specific revocations, and we have not adopted this suggestion.

Comment 2—Whether the Department Provided a Reasoned Analysis for the Proposed Rule

Several commenters assert that U.S. administrative law requires that the Department provide a ''reasoned analysis'' for this proposed change to the regulations, and that the *Proposed Rule* lacked a ''reasoned analysis'' because the Department did not explain why the *Proposed Rule* is being undertaken and why the facts and circumstances that underlay the existing revocation policy should be disregarded. They assert that, because the Department has not provided a reasoned analysis or the basic factual assumptions underlying the *Proposed Rule,* interested parties have been denied a meaningful opportunity to comment. One of these parties cites *Motor Veh. Mfrs. Ass'n* v. *State Farm Ins.,* 463 U.S. 29, 42, in support of its assertion that U.S. administrative law requires that the Department provide a ''reasoned analysis'' for this proposed change to the regulations. It argues further that pursuant to the U.S. Supreme Court ruling in *FCC* v. *Fox Television Stations, Inc.,* 556 U.S. 502 (2009), ''a reasoned explanation is needed for disregarding facts and circumstances that underlay or were engendered by the prior policy.'' The same party cites that in a prior rulemaking exercise the Department stated that it ''has consistently considered that an absence of dumping for three consecutive years was indicative that a foreign respondent was not likely to sell at less than normal value in the future.'' See *Proposed Regulation Concerning Revocation of Antidumping Duty Orders; Notice of Proposed Rulemaking,* 64 FR 29818 (June 3, 1999). It contends that in the *Proposed Rule* the Department made no effort to refute this statement, and that by not explaining the proposed change the Department's proposal runs afoul of the Administrative Procedures Act. The party also asserts that because the Department has not provided a reasoned analysis or the basic factual

assumptions underlying the proposed change, interested parties have been denied a meaningful opportunity to comment.

Response to Comments: The Department explained its reasons for eliminating company-specific revocations in the *Proposed Rule.* Specifically, the Department stated that it was proposing the elimination of company-specific revocations because: (1) The existing regulation requires the Department to expend additional resources in conducting administrative reviews where a request for company-specific revocation is being considered; (2) only a small fraction of the companies the Department reviews are ultimately found to be eligible for a company-specific revocation; (3) to the extent that eligible companies maintain antidumping duty or countervailing duty rates of zero percent, the proposal would not change the amount of duties applied to subject entries; and (4) many of the companies for which reviews have been requested may not have the opportunity to amass the three antidumping rates of zero percent or five countervailing duty rates of zero percent necessary to be eligible for a company-specific revocation because the Department frequently is not able to examine all companies under review. The Department further stated that ''[r]ather than administering the company-specific revocation regulations in a manner that does not afford equitable opportunity to all companies to seek revocation, and in light of the additional factors noted, the Department proposes to eliminate the company-specific revocation regulations.''

The Department may change its practice at any time as long as it provides a reasoned explanation for the change. *See Allegheny Ludlum.* Here, the Department provided a reasoned explanation. The Department explained the burden on its resources that company-specific revocation reviews entail. It is reasonable for the Department to make changes in response to its resource constraints. *See Pakfood Public Co. Ltd.* v. *United States,* 753 F. Supp 2d 1334 (Ct. of International Trade 2011) (holding that administrative convenience is a valid reason for a change in practice).

The Department has not ignored the circumstances that supported the existence of the regulation in the first place, but rather has determined that it is no longer appropriate to continue the practice in light of current resources for the reasons described in the *Proposed Rule.*

Comment 3—Effective Date

Some commenters ask that the Department adopt and implement the proposed change to the revocation regulations immediately (*i.e.,* make the change applicable to all administrative reviews currently pending before the Department). Others request that the Department continue to allow for revocations in all ongoing reviews in which a revocation request has been made. One commenter suggests that the Department ''grandfather in'' any company that had reviews of itself initiated prior to the adoption of this rule to give them the opportunity to earn three zeros and, ultimately, revocation. Another party expresses concern that the proposal could undermine legitimate expectations of exporters, given uncertainty over entry into force of the proposed change.

Response to Comments: As indicated in the **DATES** section above, this Final Rule will apply to all reviews that are initiated on or after June 20, 2012. The Department believes that this is a fair and reasonable approach to the effective date issue for this particular change. Importantly, implementing the Final Rule in this manner will provide parties that have requested revocation in ongoing reviews the opportunity to complete those reviews and obtain a revocation should they meet the regulatory requirements in effect when that review was initiated.

Comment 4—Reasons for Discontinuing Company-Specific Revocations

a. Conserve Resources

Some commenters agree with the Department's assertion that, pursuant to the existing regulation, the Department is required to expend additional resources, including additional mandatory verifications, in conducting administrative reviews when company-specific revocations are being considered. They assert, therefore, that the change will help to conserve resources as the Department will save money by not having to conduct ''mandatory verifications.'' They also argue that the Department will have fewer requests for review, as companies that are already subject to low deposit rates will be less likely to request a review and there will be less of an incentive for companies to ''engineer'' sales for purposes of achieving revocation, rather than for normal commercial considerations. The parties contend that the Department will also save resources by not having to conduct the changed circumstance reviews that are currently needed to determine whether an exporter, once revoked, needs to be reinstated in the order. Finally, they contend that removal of the country-wide revocation procedures is permissible and would result in further cost savings.

Another party cites to burdens on the U.S. government that are created by circumvention and evasion of trade relief with respect to certain trade remedies, and asserts that such circumstances demonstrate the importance of the proposed changes to the revocation regulations. It asserts that the individual exporter exclusions provided for under the regulations at issue substantially complicate U.S. Customs and Border Protection's responsibilities for enforcement of antidumping orders, and cites to certain duty evasion issues that the U.S. government experienced while administering certain antidumping measures. It contends that company-specific exclusions can also necessitate a significant allocation of resources by the domestic industry to monitor shipments, and try and prevent circumvention of the trade relief.

Some commenters assert that revocations actually reduce administrative burdens by eliminating the need for administrative reviews of companies that are revoked from an antidumping or countervailing duty order, and that by continuing to grant company-specific revocations the Department will free up resources to review other companies. One party asserts that there is no reason to presume that the availability of revocations increases the number of proceedings the Department must undertake. For example, it contends that in a case with a small number of exporters to the U.S. market, revocations could reduce the Department's case load. Other commenters assert that it would be an inefficient use of resources to review companies over and over when they have demonstrated that they do not engage in dumping. A few parties contend that the *Proposed Rule* will consume more resources because companies will never have a chance for revocation and will bear the expense and burden of participating in more reviews. Some commenters request that the Department find other ways to reduce burdens so that it is able to continue to administer company-specific revocations under the regulations at issue (*e.g.,* create a more efficient and less rigorous process for administrative reviews, make verifications discretionary, allow exporters to certify they are not dumping when they believe that to be the case).

One party argues that because the number of companies who are eligible for a company-specific revocation is so small, the additional resources, including additional mandatory verifications that the Department cites as a reason for the proposed change, cannot be so great. It also asserts that over time the proposed change will increase the resources expended on reviews as companies continue to request reviews to receive zero or low duty rates. The same party asserts that if the company-specific revocation regulations remain in effect, the Department and other U.S. federal agencies (*e.g.,* Customs and Border Protection) may ultimately save resources as the pool of respondents subject to review diminishes over time.

Another party asserts that since money is collected from respondent parties in the form of antidumping duties and it is relatively inexpensive to conduct a revocation proceeding, the Department should not eliminate the revocation provision in the name of resource constraints. It argues that any additional resources that may be required for considering a revocation request are minimal, and suggests that the Department instead conserve resources by limiting the ability of domestic producers to request verification.

Response to Comments: The Department believes that the change will result in savings as it will no longer have to expend the additional resources associated with the conduct of administrative reviews, particularly mandatory verifications, when requests for company-specific revocations are being considered. In addition, the Department anticipates cost savings from not having to conduct changed circumstances reviews currently needed to determine whether an exporter, once excluded, should be reinstated in the order.

With regard to various conflicting arguments that the change will result in either a decrease or an increase in the number of reviews that are requested and, therefore, that cost savings may or may not actually be realized, we find them to be based on speculation as to the motivations of individual parties who may request reviews. Pursuant to 19 CFR 351.213(b), an administrative review of an exporter or producer may be requested by a domestic interested party, a foreign government, an exporter or a producer, or an importer. The Department is in no position to determine for any given proceeding what a particular party's motivations would be in deciding to request a review and how the change may influence its decision. However, the Department would note that there would be no reason for a respondent, with a zero or *de minimis* cash deposit rate, to request another administrative review but for the possibility of revocation.

Regarding the comment suggesting the elimination of the country-wide revocation procedures as an additional means to save resources, the *Proposed Rule* and this **Federal Register** notice only pertain to company-specific revocations and the issues the Department has experienced and hopes to resolve by eliminating those types of revocations. The Final Rule does not include any changes to the parts of the revocation regulations that concern country-wide revocations.

With regard to the suggestion that company-specific revocations should be eliminated because they may be tied to circumvention or duty evasion issues that necessitate a significant allocation of resources by the domestic industry to monitor shipments, we have not relied on this claim as a basis for our decision to implement the proposed rule since we do not have evidence of increased burdens associated with such monitoring.

With regard to the suggestion that the Department conserve resources by limiting the ability of domestic producers to request verifications, we find that our current regulations provide appropriate guidance and flexibility for the conduct of verifications requested by domestic producers in light of the Department's resource considerations. Finally, if necessary, we may in the future consider additional cost-savings measures in addition to the savings associated with the changes made by this rule.

b. A Small Portion of Reviewed Companies Have Been Found To Be Eligible for a Company-Specific Revocation

Several commenters assert that the small portion of companies found to be eligible for company-specific revocation is not a relevant factor to cite in support of changing the regulations. One commenter asserts that such a statistic is simply a consequence of the difficulty of satisfying the requirements for revocation. Another asserts that this measurement is not relevant to the antidumping orders on exports from its country because a number of companies were revoked from one of those antidumping orders. Several commenters argue that the small number of company-specific revocations supports that the existing revocation regulations do not have a material impact on the Department's resources.

Response to Comments: We disagree with the assertion that the number of reviewed companies that the Department has ultimately found to be eligible for a company-specific revocation is not an important factor to cite in support of modifying 19 CFR 351.222. As indicated in the *Proposed Rule,* while the Department annually conducts administrative reviews of hundreds of foreign companies subject to antidumping or countervailing duty orders, only a small fraction of the reviewed companies are ultimately found to be eligible for a company-specific revocation. Moreover, in evaluating this matter in terms of the burden and administrative procedures involved, it is important to consider that many of the companies that request a company-specific revocation under the regulations at issue go through the process of being reviewed but are, ultimately, not found to be eligible for a company-specific revocation. We examined the review requests for orders that were in effect between 2005 and 2009 and learned that roughly 75% of the company-specific revocation requests that we received ultimately were denied. Many of the companies that requested partial revocation under the regulations at issue did not obtain one because either: (1) The company was still dumping; (2) the company did not make sales in commercial quantities; (3) the company withdrew its request for revocation and/or review after we initiated the review; (4) a revocation of the entire order via the sunset review process took place prior to completion of our review of the company-specific revocation request; or (5) the company was not selected as a respondent because the Department did not have the resources to proceed with a company-specific examination. Thus, with the status quo, the Department can expect to continue to expend significant resources examining unsuccessful requests for company-specific revocations. Instead, the Department has determined, in part, to eliminate the disconnect between the large amount of resources expended conducting these company-specific revocation reviews and the few companies that benefit.

We also disagree with the assertion by one commenter that, with respect to antidumping orders on exports from its country, the small fraction of the reviewed companies the Department ultimately found eligible for a company-specific revocation is not a relevant factor to cite in support of modifying 19 CFR 351.222. The commenter indicates that a number of companies

were revoked from one of the antidumping orders on imports from its country. Nonetheless, in evaluating and deciding on this particular change to the regulations our focus has been on all antidumping and countervailing duty orders/measures that are administered by the Department, not just revocation requests for one particular measure, industry, or country.

c. This Amendment Will Not Change the Amount of Duties Applied to Entries Subject to Antidumping or Countervailing Duty Orders Where the Duty Rates Remain Zero

Some parties agree with the Department's reliance on this factor. Others argue that, when companies maintain antidumping or countervailing duty rates of zero percent, both the Department and interested parties are expending resources on reviews of companies that are unlikely to dump or receive countervailable subsidies in the future. Another party asserts that the Department's rationale does not take into account the unpredictability and costs imposed by antidumping and countervailing duty orders. One party comments that the Department appears to be saying that its proposal is revenue neutral because it would not affect the amount of duties applied, and asserts that the amount of revenue collected in antidumping or countervailing duties is not a matter within the jurisdiction of the Department.

Response to Comments: The Department's statement is a matter of fact—if a company maintains an antidumping or countervailing duty rate of zero, its duty liability will not change as a result of this amendment. As for arguments concerning the expenditure of resources in the conduct of reviews for companies that maintain zero dumping or countervailing duty rates, such arguments are based on conjecture about the future pricing behavior of those companies and future subsidization by governments. It also assumes that interested parties will request reviews of those companies. We are not in a position to predict such future behavior. The Department's point is that, as long as a company maintains a dumping or countervailing duty rate of zero, it will incur no antidumping or countervailing duty liability. The Department's reference to this change not impacting the amount of duties collected was simply an effort to consider the burden of the proposal on parties, and not in consideration of the impact on U.S. revenue.

d. Many Companies May Not Have the Opportunity To Amass the Three AD Rates of Zero Percent or Five CVD Rates of Zero Percent

Certain commenters favoring the proposed change to the revocation regulations assert that it will result in a more equitable administration of the antidumping and countervailing duty proceedings for both the petitioners and respondents. One of these commenters claims that company-specific revocations can improperly advantage certain producers or exporters over others, and that such inequities also create difficulties for petitioners in ensuring that orders are effective in eliminating injurious dumping and subsidization.

Several commenters assert that the current company-specific revocation regulations do a good job of promoting equity by revoking orders against companies that are not dumping or receiving countervailable subsidies. They also assert that when such revocations result in one less company to review, it permits companies not previously examined an opportunity to be selected for examination. One commenter contends that there is no reason to deny the important benefits of company-specific revocations simply because it may be impractical in every case. The party also asserts that there are other benefits in the antidumping and countervailing duty regime that are applied unevenly (notably, the ability to obtain one's own margin, as opposed to an average of other rates). Some commenters suggest that the Department adopt new procedures that will allow for all interested and eligible exporters to participate in reviews to the extent necessary to achieve revocation. A few commenters assert that certain factors we cite in support of this change to the revocation regulations do not apply to the unique circumstances of trade remedy measures on their exports (*e.g.,* certain cases involve a ''manageable'' number of companies and, therefore, the Department should not be concerned with companies in those cases not having an opportunity to be reviewed and amass the requisite zero rates).

Response to Comments: The Department continues to find that this change to the regulations will, in general, result in a more equitable administration of the antidumping and countervailing duty proceedings. In particular, and as explained in the *Proposed Rule,* many of the companies for which reviews are requested may not have the opportunity to amass the three antidumping rates of zero percent (demonstrating an absence of dumping for three consecutive years) or five countervailing duty rates of zero percent (demonstrating an absence of countervailable subsidies for five consecutive years) necessary to be eligible for a company-specific revocation. See *Proposed Rule,* 76 FR 15234. This is because it is often not practicable for the Department to examine all companies for which reviews have been requested, and where such circumstances exist, the Act permits the Department to limit the number of companies it individually examines. Rather than administering the company-specific revocation regulations in a manner that does not afford equitable opportunity to all companies to seek revocation, and in light of the comments and various factors noted in the *Proposed Rule* and this **Federal Register** notice, the Department is eliminating the company-specific revocation regulations. Moreover, by eliminating the need to obtain two/four subsequent reviews for revocation, the Department anticipates that fewer companies with zero or *de minimis* deposit rates will request reviews, freeing up limited resources to consider the antidumping or countervailing duty rates of other companies.

With regard to the suggestion that the Department develop or adopt new company-specific revocation procedures, the Department has not identified any new procedures for company-specific revocations that would address all the reasons it has for discontinuing such revocations. As for the commenters that assert that our reasons for discontinuing company-specific revocations do not apply to a particular antidumping or countervailing duty order, we do not find that any sort of differential treatment would be appropriate.

e. Trade Law Enforcement Initiative

One commenter states that the genesis of this proposal was an August 2010 announcement by the Secretary of Commerce to strengthen trade enforcement with a particular focus on illegal import practices from non-market economy countries. The commenter contends that there is little correlation between illegal import practices from non-market economies and the *Proposed Rule,* and asserts that the Secretary's concerns are more appropriately addressed by other items mentioned in the August 2010 announcement.

Response to Comments: This proposal was identified in the August 26, 2010, announcement of a Trade Law Enforcement Package to strengthen the administration of the nation's trade

remedy laws. In making the announcement about this initiative, addressing illegal import practices from non-market economies was highlighted as an objective, but that objective is secondary to the overall purpose of the initiative which is to strengthen the administration of the nation's trade remedy laws. Further, in the *Proposed Rule,* and in the above sections of this notice, the Department provides a detailed explanation and information about the factors that warrant this amendment. Those factors and the rule change are not specific to imports from any one country or type of economy (market or non-market).

Comment 5—Company-Specific Revocations Award Good Behavior

Several commenters assert that the Department should maintain the existing rules for company-specific revocations as a direct incentive to induce individual foreign firms to adjust prices and eliminate dumping or receiving subsidies. Another party comments that such revocations give respondents hope that if they comply with the United States antidumping and countervailing duty laws, their efforts may be recognized and rewarded by revocation. Another party asserts that company-specific revocations ensure that U.S. manufacturers, retailers and consumers are not denied access to fairly traded goods.

Response to Comments: While we appreciate that companies may wish to retain the opportunity to be revoked from an order, as we noted under Comment 1, there is no obligation under U.S. law or the WTO Agreements to provide for such company-specific revocations. Moreover, if a foreign firm stops dumping or receiving countervailable subsidies, it will eliminate its liability for antidumping and countervailing duties, and U.S. manufacturers will have full access to its fairly traded goods. Finally, the antidumping and countervailing duty laws do not exist to reward any behavior. Instead, these laws exist to provide a remedy for injurious market-distorting unfair trade practices. The imposition of a remedial duty discourages such practices to the extent they are found to exist. As noted above, by maintaining a zero dumping margin or zero subsidy rate, companies avoid liability for these duties.

Comment 6—Impact of the Proposed Change on the Economy and Trade

Several commenters request that the Department not change its revocation policy until it conducts a review of the impact of the change on consuming industries and other parties that utilize imports that are subject to antidumping or countervailing duty orders. They assert that such parties will be negatively affected as a result of the Department performing administrative reviews of individual companies that would have otherwise been revoked from an order. One commenter asserts that the proposed change would restrict the ability of U.S. retailers to provide consumers with a variety of high-quality products at affordable prices, undermine U.S. competitiveness, put U.S. jobs at risk, and undermine the Administration's goal of doubling U.S. exports.

Response to Comments: With respect to the comment about consuming industries and other parties that utilize imports that are subject to antidumping or countervailing duty orders, 5 U.S.C. 605(b) requires that the Department consider the ''economic impact on a substantial number of small business entities'' which includes such parties. The Department provided the analysis required by 5 U.S.C. 605(b) when it issued the *Proposed Rule*. See *Proposed Rule,* 76 FR at 15234. More specifically, the Department explained that in the past five years, despite conducting administrative reviews of well over five hundred companies, only 15 companies (of various sizes) have obtained a company-specific revocation under the relevant portions of 19 CFR 351.222. We also believe that in considering the economic impact that this change may have, it is important to take into account the fact that less than two percent of all imports of goods into the United States are subject to antidumping or countervailing duties, and only a very small portion of those imports will ever be affected by this change to the revocation regulations. For these reasons, we continue to find that this change to the revocation regulations will not have a significant economic impact.

Comment 7—Calculation of the Margin for Non-Selected Companies

One commenter urges that, in light of this regulatory change, the Department should consider carefully its methodology for calculating the rate that is assigned to respondents that are not selected for individual review when the Department limits its examination in an administrative review. It notes that when the Department limits its examination to the largest exporters, it applies to the non-examined companies the average of the individual margins assigned to the mandatory respondents, except for any margins that are zero, *de minimis,* or based on adverse facts available. It also notes that when all of the mandatory respondents receive margins that are zero, *de minimis* or based on adverse facts available, the Department bases the margin for the non-selected respondents on the most recently calculated affirmative margin from a previous administrative review. It asserts that this situation is likely to arise with far greater frequency once zeroing in administrative reviews is eliminated and the revocation regulations are modified. It also asserts that over time, a margin for non-selected companies identified in this manner could be based on a margin calculated several years in the past and it would no longer be a reasonable approximation of the pricing behavior of non-selected respondents.

Response to Comments: With regard to the Department's practice or methodology for calculating the rate that is assigned to respondents that are not selected for individual review when the Department limits its examination, we believe it would be premature to try and address that issue in the context of a change to the revocation regulations. It would be more appropriate to evaluate that issue in the context of future antidumping or countervailing duty proceedings.

Comment 8—Zeroing in Relation to Company-Specific Revocations

One company cites to the possible elimination of zeroing in AD reviews (see *Antidumping Proceedings: Calculation of the Weighted Average Dumping Margin and Assessment Rate in Certain Antidumping Proceedings,* 75 FR 81533 (December 28, 2010)), and asserts that if the Department stops zeroing, one would expect that a significant number of exporters may qualify for revocation in the years following the change. Another company suggests that eliminating zeroing while retaining the possibility of revocation should materially reduce the Department's workload after a few years; however, if the Department eliminates both zeroing and revocation, then the Department will waste its resources in repetitious reviews of companies with zero margins.

Response to Comments: On February 14, 2012, in response to several WTO dispute settlement reports, the Department adopted a revised methodology which allows for offsets when making average-to-average comparisons in reviews. *See Antidumping Proceedings: Calculation of the Weighted-Average Dumping Margin and Assessment Rate in Certain Antidumping Duty Proceedings; Final Modification,* 77 FR 8101 (February 14,

2012). (''Final Modification for Reviews''). The Final Modification for Reviews makes clear that the revised methodology will apply to antidumping duty administrative reviews where the preliminary results are issued after April 16, 2012. The revision to our calculation methodology in antidumping duty administrative reviews was made to implement certain findings by the WTO Appellate Body with respect to that methodology in several disputes. *See United States-Laws, Regulations and Methodology for Calculating Dumping Margins,* WT/DS294/R, WT/DS294/AB/R, adopted May 9, 2006; *United States-Measures Related to Zeroing and Sunset Reviews,* WT/DS322/R, WT/DS322/AB/R, adopted Jan. 23, 2007; *United States-Final Anti-Dumping Measures on Stainless Steel From Mexico,* WT/DS344/R, WT/DS344/AB/R, adopted May 20, 2008; *United States-Continued Existence and Application of Zeroing Methodology,* WT/DS350/R, WR/DS350/AB/R, adopted Feb. 19, 2009. The Department's decision to change the revocation regulations has been made without regard to, and irrespective of, the change in our calculation methodology as a result of the implementation. Moreover, the comments regarding the possible effects of the proposed revision to our calculation methodology in antidumping duty reviews are based solely upon speculation.

Comment 9—Revocations of AD and CVD Measures—In Whole

Several parties indicate that with respect to revocation or termination in whole, the Department's regulations would remain substantively unchanged and, therefore, in addressing whether or not to award revocation or termination in whole, the Department will need to consider whether ''all exporters and producers'' have not dumped for at least three consecutive years or have not applied for or received any net countervailable subsidy for at least five consecutive years, respectively. In light of the fact that the Department often reviews individually only a small number of the foreign exporters and producers covered by an order, they ask the Department to consider and address how these prerequisites for revocation or termination in whole are to be satisfied. They propose that each foreign exporter or producer must demonstrate affirmatively that it met these conditions for the prescribed number of years before revocation or termination in whole will be granted by the Department. One of these parties also asked the Department to consider how to address revocation requests when all mandatory respondents receive rates of zero percent for the requisite number of years under § 351.222(b)(1) and (c)(1)–(2); in particular, whether these rates would be assigned to all non-reviewed companies and, if so, whether the order in whole would then be eligible for revocation. One commenter suggests that in addition to withdrawing the regulations establishing company-specific revocations at 19 CFR 351.222(b)(2) and (3) and 351.222(c)(3) and (4), the Department should withdraw its regulations providing for country-wide revocations.

Response to Comments: We generally agree with the commenters' assertion that each foreign exporter or producer would have to demonstrate that it met the regulatory requirements for the prescribed number of years before revocation or termination in whole could be granted by the Department. With regard to considering how to address revocation requests when all mandatory respondents receive rates of zero percent for the requisite number of years under §§ 351.222(b)(1) and (c)(1)–(2), we believe it is premature to decide whether such circumstances would warrant a revocation of an order in whole. We will address any such scenarios as they arise in the context of future antidumping or countervailing duty proceedings. In addition, we have not adopted the suggestion that in addition to withdrawing the regulations establishing company-specific revocations at 19 CFR 351.222(b)(2) and (3) and 351.222(c)(3) and (4), the Department should withdraw its regulations providing for country-wide revocations at 19 CFR 351.222(b)(l) (dumping) and 351.222(c)(1) and (2) (subsidies). The *Proposed Rule* and this **Federal Register** notice only pertain to company-specific revocations and the issues the Department has experienced and hopes to resolve by eliminating those types of revocations. See the *Proposed Rule* and Comment 4 above.

Comment 10—Reinstatement of AD and CVD Measures

Several commenters requested that the Department not withdraw the subsections of the revocation regulations that deal with the reinstatement of partially revoked orders (*i.e.,* 19 CFR 351.222(b)(2)(i)(B), (e)(1)(iii) (antidumping duty orders) and (c)(3)(i)(B), (e)(2)(iii)(D) (countervailing duty orders)). They contend that if the subsections are removed, it is unclear what recourse would be available to the Department in the event that companies, for which orders have already been partially revoked, resume making U.S. sales at dumped prices or resume benefitting from countervailable subsidies in violation of trade remedy laws. They suggest that in light of the proposed amendments to 19 CFR 351.222, the Department should maintain the rules that would provide for the reinstatement of partially revoked antidumping and countervailing duty orders. One party suggests that the Department maintain the current version of § 351.222(b)(2)(i)(B), (c)(3)(i)(B), (e)(1)(iii), and (e)(2)(iii)(D) in its regulations but clarify that they apply only to orders that have been partially revoked prior to the effective date of the change in regulations.

Response to Comments: We have not adopted the changes proposed by these parties. Any company that has been revoked from an antidumping or countervailing duty order will remain subject to its certified agreement to be reinstated with respect to that order if the Department finds it to have resumed dumping or to be benefitting from a countervailable subsidy. The modification does not absolve the company from its obligations under its existing agreement.

Comment 11—Clerical Error in the Proposed Rule

Two commenters assert that the Department made a typographical error in § 351.222(e)(1)(i) of the proposed amendment to the revocation regulations. One commenter suggests that the term ''the person'' may need to be changed to the plural form to conform to ''all exporters and producers.'' The other suggests that the reference to ''the person'' be changed to ''the exporter or producer in each instance.''

Response to Comments: We agree that there is a typographical error in § 351.222(e)(1)(i) of the *Proposed Rule*. The term ''the person'' needs to be in a plural form, so we have changed the term to ''they''.

Classification

Executive Order 12866

The rule has been determined to be not significant for purposes of Executive Order 12866.

Regulatory Flexibility Act

The Chief Counsel for Regulation has certified to the Chief Counsel for Advocacy of the Small Business Administration (''SBA'') under the provisions of the Regulatory Flexibility Act, 5 U.S.C. 605(b), that the proposed rule would not have a significant economic impact on a substantial

number of small business entities. The factual basis for the certification was published in the *Proposed Rule*. The Department received comments regarding the factual basis for this decision, and has summarized and responded to those comments in the above section of this notice entitled ''Comment 4—Reasons for Discontinuing Company-Specific Revocations''. Based upon the Department's analysis, as discussed above, the factual basis used in the *Proposed Rule* to determine that the rule, if promulgated, would not have a significant impact on a substantial number of small business entities did not change. As a result, a Final Regulatory Flexibility analysis is not required and has not been prepared.

Paperwork Reduction Act

This rule does not contain a collection of information for purposes of the Paperwork Reduction Act of 1980, as amended (44 U.S.C. 3501 *et seq.*).

List of Subjects in 19 CFR Part 351

Administrative practice and procedure, Antidumping, Business and industry, Cheese, Confidential business information, Countervailing duties, Freedom of information, Investigations, Reporting and recordkeeping requirements.

Dated: May 15, 2012.

Paul Piquado,

Assistant Secretary for Import Administration.

For the reasons stated, 19 CFR part 351 is amended as follows:

PART 351—ANTIDUMPING AND COUNTERVAILING DUTIES

■ 1. The authority citation for 19 CFR part 351 continues to read as follows:

Authority: 5 U.S.C. 301; 19 U.S.C. 1202 note; 19 U.S.C. 1303 note; 19 U.S.C. 1671 et seq.; and 19 U.S.C. 3538.

■ 2. In § 351.222, revise paragraphs (a), (b), (c), (e), and (f), remove paragraph (m), and redesignate paragraph (n) as paragraph (m) to read as follows:

§ 351.222 Revocation of orders; termination of suspended investigations.

(a) *Introduction.* ''Revocation'' is a term of art that refers to the end of an antidumping or countervailing proceeding in which an order has been issued. ''Termination'' is the companion term for the end of a proceeding in which the investigation was suspended due to the acceptance of a suspension agreement. Generally, a revocation or termination may occur only after the Department or the Commission has conducted one or more reviews under section 751 of the Act. This section contains rules regarding requirements for a revocation or termination; and procedures that the Department will follow in determining whether to revoke an order or terminate a suspended investigation.

(b) *Revocation or termination based on absence of dumping.* (1) In determining whether to revoke an antidumping duty order or terminate a suspended antidumping investigation, the Secretary will consider:

(i) Whether all exporters and producers covered at the time of revocation by the order or the suspension agreement have sold the subject merchandise at not less than normal value for a period of at least three consecutive years; and

(ii) Whether the continued application of the antidumping duty order is otherwise necessary to offset dumping.

(2) If the Secretary determines, based upon the criteria in paragraphs (b)(1)(i) and (ii) of this section, that the antidumping duty order or suspension of the antidumping duty investigation is no longer warranted, the Secretary will revoke the order or terminate the investigation.

(c) *Revocation or termination based on absence of countervailable subsidy.* (1)(i) In determining whether to revoke a countervailing duty order or terminate a suspended countervailing duty investigation, the Secretary will consider:

(A) Whether the government of the affected country has eliminated all countervailable subsidies on the subject merchandise by abolishing for the subject merchandise, for a period of at least three consecutive years, all programs that the Secretary has found countervailable;

(B) Whether exporters and producers of the subject merchandise are continuing to receive any net countervailable subsidy from an abolished program referred to in paragraph (c)(1)(i)(A) of this section; and

(C) Whether the continued application of the countervailing duty order or suspension of countervailing duty investigation is otherwise necessary to offset subsidization.

(ii) If the Secretary determines, based upon the criteria in paragraphs (c)(1)(i)(A) through (C) of this section, that the countervailing duty order or suspension of the countervailing duty investigation is no longer warranted, the Secretary will revoke the order or terminate the suspended investigation.

(2)(i) In determining whether to revoke a countervailing duty order or terminate a suspended countervailing duty investigation, the Secretary will consider:

(A) Whether all exporters and producers covered at the time of revocation by the order or the suspension agreement have not applied for or received any net countervailable subsidy on the subject merchandise for a period of at least five consecutive years; and

(B) Whether the continued application of the countervailing duty order or suspension of the countervailing duty investigation is otherwise necessary to offset subsidization.

(ii) If the Secretary determines, based upon the criteria in paragraphs (c)(2)(i)(A) and (B) of this section, that the countervailing duty order or the suspension of the countervailing duty investigation is no longer warranted, the Secretary will revoke the order or terminate the suspended investigation.

* * * * *

(e) Request for revocation or termination—(1) *Antidumping proceeding.* During the third and subsequent annual anniversary months of the publication of an antidumping order or suspension of an antidumping investigation, any exporter or producer may request in writing that the Secretary revoke an order or terminate a suspended investigation under paragraph (b) of this section if the person submits with the request:

(i) Certifications for all exporters and producers covered by the order or suspension agreement that they sold the subject merchandise at not less than normal value during the period of review described in § 351.213(e)(1), and that in the future they will not sell the merchandise at less than normal value; and

(ii) Certifications for all exporters and producers covered by the order or suspension agreement that, during each of the consecutive years referred to in paragraph (b) of this section, they sold the subject merchandise to the United States in commercial quantities.

(2) *Countervailing duty proceeding.* (i) During the third and subsequent annual anniversary months of the publication of a countervailing duty order or suspension of a countervailing duty investigation, the government of the affected country may request in writing that the Secretary revoke an order or terminate a suspended investigation under paragraph (c)(1) of this section if the government submits with the request its certification that it has satisfied, during the period of review described in § 351.213(e)(2), the

requirements of paragraph (c)(1)(i) of this section regarding the abolition of countervailable subsidy programs, and that it will not reinstate for the subject merchandise those programs or substitute other countervailable subsidy programs;

(ii) During the fifth and subsequent annual anniversary months of the publication of a countervailing duty order or suspended countervailing duty investigation, the government of the affected country may request in writing that the Secretary revoke an order or terminate a suspended investigation under paragraph (c)(2) of this section if the government submits with the request:

(A) Certifications for all exporters and producers covered by the order or suspension agreement that they have not applied for or received any net countervailable subsidy on the subject merchandise for a period of at least five consecutive years (see paragraph (c)(2)(i) of this section);

(B) Those exporters' and producers' certifications that they will not apply for or receive any net countervailable subsidy on the subject merchandise from any program the Secretary has found countervailable in any proceeding involving the affected country or from other countervailable programs (see paragraph (c)(2)(ii) of this section); and

(C) A certification from each exporter or producer that, during each of the consecutive years referred to in paragraph (c)(2) of this section, that person sold the subject merchandise to the United States in commercial quantities.

(f) *Procedures.* (1) Upon receipt of a timely request for revocation or termination under paragraph (e) of this section, the Secretary will consider the request as including a request for an administrative review and will initiate and conduct a review under § 351.213.

(2) When the Secretary is considering a request for revocation or termination under paragraph (e) of this section, in addition to the requirements of § 351.221 regarding the conduct of an administrative review, the Secretary will:

(i) Publish with the notice of initiation under § 351.221(b)(1), notice of ''Request for Revocation of Order'' or ''Request for Termination of Suspended Investigation'' (whichever is applicable);

(ii) Conduct a verification under § 351.307;

(iii) Include in the preliminary results of review under § 351.221(b)(4) the Secretary's decision whether there is a reasonable basis to believe that the requirements for revocation or termination are met;

(iv) If the Secretary decides that there is a reasonable basis to believe that the requirements for revocation or termination are met, publish with the notice of preliminary results of review under § 351.221(b)(4) notice of ''Intent To Revoke Order'' or ''Intent To Terminate Suspended Investigation'' (whichever is applicable);

(v) Include in the final results of review under § 351.221(b)(5) the Secretary's final decision whether the requirements for revocation or termination are met; and

(vi) If the Secretary determines that the requirements for revocation or termination are met, publish with the notice of final results of review under § 351.221(b)(5) notice of ''Revocation of Order'' or ''Termination of Suspended Investigation'' (whichever is applicable).

(3) If the Secretary revokes an order, the Secretary will order the suspension of liquidation terminated for the merchandise covered by the revocation on the first day after the period under review, and will instruct the Customs Service to release any cash deposit or bond.

* * * * *

[FR Doc. 2012–12257 Filed 5–18–12; 8:45 am]

BILLING CODE 3510–DS–P

DEPARTMENT OF THE TREASURY

31 CFR Part 150

RIN 1505—AC42

Assessment of Fees on Large Bank Holding Companies and Nonbank Financial Companies Supervised by the Federal Reserve Board To Cover the Expenses of the Financial Research Fund

AGENCY: Departmental Offices, Treasury.

ACTION: Final rule and interim final rule.

SUMMARY: The Department of the Treasury is issuing this final rule and interim final rule to implement Section 155 of the Dodd-Frank Wall Street Reform and Consumer Protection Act (''Dodd-Frank Act''), which directs the Treasury to establish by regulation an assessment schedule for bank holding companies with total consolidated assets of $50 billion or greater and nonbank financial companies supervised by the Board of Governors of the Federal Reserve (''the Board'') to collect assessments equal to the total expenses of the Office of Financial Research (''OFR'' or ''the Office''). Included in the Office's expenses are expenses of the Financial Stability Oversight Council (''FSOC'' or ''the Council''), as provided under Section 118 of the Dodd-Frank Act, and certain expenses of the Federal Deposit Insurance Corporation (''FDIC''), as provided under Section 210 of the Dodd-Frank Act. The portion of this rule concerning the assessment schedule for bank holding companies is issued as a final rule. The portion of this rule related to the assessments for nonbank financial companies supervised by the Board is issued as an interim final rule, to allow for the consideration of additional comments in conjunction with related FSOC rules. This final rule and interim final rule establish the key elements of Treasury's assessment program, which will collect semiannual assessment fees from these companies beginning on July 20, 2012. These rules take into account the comments received on the January 3, 2012 proposed rule and make minor revisions pursuant to the comments.

DATES: *Effective date for final rule:* July 20, 2012. *Effective date for interim final rule:* Sections 150.2, 150.3(b), 150.5, and 150.6(a) and (b), which relate to nonbank financial companies, are effective on July 20, 2012 *Comment due date:* September 18, 2012. Comments are invited on §§ 150.2, 150.3(b)(4), 150.5, and 150.6(a) and (b), which relate to nonbank financial companies.

ADDRESSES: Submit comments electronically through the Federal eRulemaking Portal: *http://www.regulations.gov,* or by mail (if hard copy, preferably an original and two copies) to: The Treasury Department, Attn: Financial Research Fund Assessment Comments, 1500 Pennsylvania Avenue NW., Washington, DC 20220. Because paper mail in the Washington, DC area may be subject to delay, it is recommended that comments be submitted electronically. Please include your name, affiliation, address, email address, and telephone number in your comment. Comments will be available for public inspection on *www.regulations.gov.* In general comments received, including attachments and other supporting materials, are part of the public record and are available to the public. Do not submit any information in your comment or supporting materials that you consider confidential or inappropriate for public disclosure.

FOR FURTHER INFORMATION CONTACT: Jonathan Sokobin: (202) 927–8172.

SUPPLEMENTARY INFORMATION:

I. Executive Summary

A. Purpose of the Regulatory Action

1. Need for Regulatory Action

Section 155 of the Dodd-Frank Act, Public Law 111–203 (July 21, 2010), directs the Secretary of the Treasury to establish by regulation, and with the approval of the Council, an assessment schedule to collect assessments from certain companies equal to the total expenses of the Office beginning on July 20, 2012. Section 155 describes these companies as:

(A) Bank holding companies having total consolidated assets of $50 billion or greater; and

(B) Nonbank financial companies supervised by the Board.

Under Section 118 of the Dodd-Frank Act, the expenses of the Council are considered expenses of, and are paid by, the OFR. In addition, under Section 210 implementation expenses associated with the FDIC's orderly liquidation authorities are treated as expenses of the Council,[1] and the FDIC is directed to periodically submit requests for reimbursement to the Council Chair. The total expenses for the OFR thereby include the combined expenses of the OFR, the Council, and certain expenses of the FDIC. All of these expenses are paid out of the Financial Research Fund (FRF), a fund managed by the Department of the Treasury for this sole purpose.

The Council was established by the Dodd-Frank Act to coordinate across agencies in monitoring risks and emerging threats to U.S. financial stability. The OFR was established within the Treasury Department by the Dodd-Frank Act to serve the Council, its member agencies, and the public by improving the quality, transparency, and accessibility of financial data and information, by conducting and sponsoring research related to financial stability, and by promoting best practices in risk management.

2. Legal Authority

The authority for this regulation is Section 155(d) of the Dodd-Frank Act, which directs the Secretary of the Treasury to establish an assessment schedule by regulation, including the assessment base and rates, with the approval of the Council.

[1] Under Title II, Section 210(n)(10)(C) of the Dodd-Frank Act the term implementation expenses ''(i) means costs incurred by [the FDIC] beginning on the date of enactment of this Act, as part of its efforts to implement [Title II] that do not relate to a particular covered financial company; and (ii) includes the costs incurred in connection with the development of policies, procedures, rules, and regulations and other planning activities of the [FDIC] consistent with carrying out [Title II].''

B. Summary of the Major Provisions of This Regulatory Action

This final rule and interim final rule direct (a) how the Treasury will determine which companies will be subject to an assessment fee, (b) how the Treasury will estimate the total expenses that are necessary to carry out the activities to be covered by the assessment, (c) how the Treasury will determine the assessment fee for each of these companies, and (d) how the Treasury will bill and collect the assessment fee from these companies. The final rule applies to bank holding companies and foreign banking organizations; the interim final rule applies to nonbank financial companies. The comment period for the interim final rule is 120 days.

Bank holding companies that have eligible assets of $50 billion or more will be subject to assessments, where eligible assets are calculated as the average of a company's total consolidated assets for the four quarters preceding the determination date. Foreign banking organizations that have eligible assets of $50 billion or more will be subject to assessments, where eligible assets are calculated as the average of the company's total assets of combined U.S. operations for the four quarters preceding the determination date. (For foreign banking organizations that only report to the Federal Reserve annually, eligible assets are calculated as the average of the company's total assets of combined U.S. operations for the two years preceding the determination date.) All nonbank financial companies supervised by the Board will be subject to assessments.

For each assessment period, the Department will calculate an assessment basis that is sufficient to replenish the FRF to a level equivalent to the sum of the operating expenses of the OFR and the Council for the assessment period, the capital expenses for the OFR and the Council for the 12-month period beginning on the first day of the assessment period, and an amount necessary to reimburse reasonable implementation expenses of the FDIC orderly liquidation authorities. For the initial assessment covering July 21, 2012 to March 31, 2013, the assessment basis will be calculated as the sum of the operating expenses for the OFR and the Council during this time period, the capital expenses for the OFR and the Council for July 21, 2012 to April 30, 2013, and the amount necessary to reimburse reasonable implementation expenses of the FDIC orderly liquidation authorities.

Assessments for each company will be calculated as the product of a company's eligible assets and a fee rate, where the fee rate is set to replenish the FRF to the levels defined in the preceding paragraph. Fee rates will be published roughly one month prior to collections, with billing at least 14 days prior to collections. Collections will be managed through *www.pay.gov,* and will generally occur on March 15 and September 15. Determination dates will generally be November 30 and May 31 of each year. The determination date for the initial assessment will be December 31, 2011.

C. Costs and Benefits

The assessment and collection of fees described in this rule represent an economic transfer from assessed companies to the government, for purposes of providing the benefits associated with coordinated identification and monitoring of risks to U.S. financial stability, promoting market discipline, and responding to emerging threats to the U.S. financial system. As such, the assessments do not represent an economic cost. However, the allocation of the assessment may have distributional impacts. Treasury estimates that approximately 50 companies will be determined as eligible for the initial assessment, and in addition the estimated cost for each company of filling out the forms and submitting payment to the Treasury Department will be $600.

II. Background

Section 155 of the Dodd-Frank Act, Public Law 111–203 (July 21, 2010), directs the Secretary of the Treasury to establish by regulation, and with the approval of the Council, an assessment schedule to collect assessments from certain companies equal to the total expenses of the Office beginning on July 20, 2012. Section 155 describes these companies as:

(A) Bank holding companies having total consolidated assets of $50 billion or greater; and

(B) Nonbank financial companies supervised by the Board.

Under Section 118 of the Dodd-Frank Act, the expenses of the Council are considered expenses of, and are paid by, the OFR. In addition, under Section 210 implementation expenses associated with the FDIC's orderly liquidation authorities are treated as expenses of the Council,[2] and the FDIC is directed to

[2] Under Title II, Section 210(n)(10)(C) of the Dodd-Frank Act the term implementation expenses ''(i) means costs incurred by [the FDIC] beginning on the date of enactment of this Act, as part of its

Continued

periodically submit requests for reimbursement to the Council Chair. The total expenses for the OFR thereby include the combined expenses of the OFR, the Council, and certain expenses of the FDIC. All of these expenses are paid out of the Financial Research Fund (FRF), a fund managed by the Department of the Treasury.

The Council was established by the Dodd-Frank Act to coordinate across agencies in monitoring risks and emerging threats to U.S. financial stability. The Council is chaired by the Secretary of the Treasury and brings together all federal financial regulators, an independent member with insurance expertise appointed by the President, and certain state regulators. Under the Dodd-Frank Act, the Council is tasked with identifying and monitoring risks to U.S. financial stability, promoting market discipline, and responding to emerging threats to the U.S. financial system.[3]

The OFR was established within the Treasury Department by the Dodd-Frank Act to serve the Council, its member agencies, and the public by improving the quality, transparency, and accessibility of financial data and information, by conducting and sponsoring research related to financial stability, and by promoting best practices in risk management. Among the OFR's key tasks are:

- Measuring and analyzing factors affecting financial stability and helping FSOC member agencies to develop policies to promote it;
- Collecting needed financial data, and promoting their integrity, accuracy, and transparency for the benefit of market participants, regulators, and research communities;
- Reporting to the Congress and the public on the OFR's assessment of significant financial market developments and potential threats to financial stability; and
- Collaborating with foreign policymakers and regulators, multilateral organizations, and industry to establish global standards for data and analysis of policies that promote financial stability.

On January 3, 2012, the Treasury published a proposed rule (77 FR 35) to establish procedures to estimate, bill, and collect, on an ongoing basis beginning on July 20, 2012, the total budgeted expenses of the OFR, including those estimated separately by the Council for the Council's expenses, and expenses submitted by the FDIC.[4] As described in the proposed rule, the aggregate of these estimated expenses would provide the basis for an assessment that the Treasury would collect through a semiannual fee on individual companies based on each company's total consolidated assets. For a foreign company, the assessment fee would be based on the total consolidated assets of the foreign company's combined U.S. operations.

The proposed rule outlined how the Treasury's assessment fee program would be administered, including (a) how the Treasury would determine which companies will be subject to an assessment fee, (b) how the Treasury would estimate the total expenses that are necessary to carry out the activities to be covered by the assessment, (c) how the Treasury would determine the assessment fee for each of these companies, and (d) how the Treasury would bill and collect the assessment fee from these companies. Treasury sought comments on all aspects of the proposed rulemaking. See 77 FR 35 for a complete discussion of the proposal.

III. This Final Rule and Interim Final Rule

The final rule is adopted essentially as proposed for bank holding companies and foreign banking organizations, with an adjustment to the timeframe for assessment collections. The rule for nonbank financial companies is issued as an interim final rule, reflecting the Treasury's intent to evaluate the assessment schedule for nonbank financial companies as the Council implements its authority to determine companies for enhanced supervision by the Board.[5] In response to comments received, several technical and administrative changes were made to clarify these rules, which are discussed below.

The Treasury received 12 comment letters on the proposed rule. Six comment letters were from associations that represent financial institutions (including one joint letter sent by five associations); two comment letters were from insurance companies; two comment letters were from individuals; one comment letter was from an association that represents financial professionals; and one comment letter was from a public interest group. For the reasons that follow, the Treasury has determined to adopt this rule and interim final rule as follows.

Comments and the Treasury's Responses

Comments were received in the following broad categories:

- Assessment methodology
  - Use of total consolidated assets to calculate total assessable assets
  - Other assessment methodology comments
- Assessments on nonbank financial companies
- Assessment basis and administration
- Assessment timeframe
- Term definitions
- Comments of general support

Assessment Methodology

Use of Total Consolidated Assets To Calculate Total Assessable Assets

Six of the comment letters from associations that represent financial institutions and insurance companies were critical of the proposed use of total consolidated assets to allocate the assessment basis to assessed companies. The letters argued that total consolidated assets alone was an insufficient representation of the risk factors outlined in Section 115(a)(2)(A) of the Dodd-Frank Act as referenced in Section 155(d) of the Act, and would not be sufficient to differentiate risk levels between companies for purposes of assessments. Two comment letters suggested alternative assessment approaches. One commenter suggested that the methodology be based on the six-category framework used to evaluate the potential for a nonbank financial company to pose a threat to U.S. financial stability, as outlined in the Council's rule on determination of nonbank financial companies for heightened supervision by the Board. Another commenter suggested that it be based on the risk-adjusted assessment schedule used by the FDIC to collect deposit insurance premiums from banks

efforts to implement [Title II] that do not relate to a particular covered financial company; and (ii) includes the costs incurred in connection with the development of policies, procedures, rules, and regulations and other planning activities of the [FDIC] consistent with carrying out [Title II].''

[3] As outlined in Section 112 of the Dodd-Frank Act, the Council is tasked with the following:

1. To identify risks to the financial stability of the United States that could arise from the material financial distress or failure, or ongoing activities, of large, interconnected bank holding companies or nonbank financial companies, or that could arise outside the financial services marketplace.

2. To promote market discipline, by eliminating expectations on the part of shareholders, creditors, and counterparties of such companies that the Government will shield them from losses in the event of failure.

3. To respond to emerging threats to the stability of the United States financial system.

[4] As proposed, the assessment basis would be determined so as to replenish the FRF at the start of each assessment period to a level equivalent to six months of budgeted operating expenses and twelve months of capital expenses for the OFR and FSOC, as well as covered FDIC expenses.

[5] ''Authority to Require Supervision and Regulation of Certain Nonbank Financial Companies'', 77 FR 21637.

and thrifts. Two of the comment letters, while expressing the concerns described above, also noted that using total consolidated assets to calculate assessable assets was simple, clear and transparent.

One comment letter supported the proposal to base calculation of total assessable assets for foreign banking organizations on assets of combined U.S. operations and to only assess those companies with more than $50 billion in total assessable assets. The comment letter noted that these two features of the rule will facilitate administration of assessments and are consistent with the statutory requirement that the assessment schedule take into account differences among assessed companies, based on the considerations set forth in Section 115.

The Treasury's proposed implementation of Section 155 [6] was guided by the following principles:

- The assessment structure should be simple and transparent; and
- Allocation among companies should take into account differences among such companies, based on the considerations for establishing the prudential standards under Section 115 of the Dodd-Frank Act as required by the Act.

As stated in the Preamble to the Notice of Public Rulemaking, the Treasury believes there is significant benefit to adopting a standard that is transparent, well-understood by market participants, and reasonably estimable. Commenters suggested that this transparency and predictability was particularly important for foreign entities assessed. As discussed in the proposed rule, a number of different assessment schedules for assessing companies were considered, based on the two principles outlined above. After evaluating these different assessment schedules, the Treasury proposed to allocate the assessment basis among assessed companies based on the total consolidated assets of each company. The Treasury, after considering the comments, continues to believe that relying on the total consolidated assets of each assessed company to allocate assessments on a percentage basis is consistent with its legislative mandate and represents the best approach to take into account differences among companies based on the considerations in Section 115 while keeping the assessment structure simple and transparent. Applying each Section 115 factor with respect to each assessed firm could well require individualized subjective determinations, which would be impracticable as well as opaque, and would not be consistent with the statutory requirement to create an ''assessment schedule, including the assessment base and rates.'' [7] Similarly, the Treasury considered relying on an established ratings system, such as the CAMELS system employed by the FDIC, as suggested by one commenter. The Treasury deemed such an approach as inappropriate for the following reasons: first, the methodology to produce the CAMELS ratings is non-public, the ratings are confidential supervisory information ,[8] and the rating system was developed for U.S. depository institutions. Second, the broad rankings provided by such a system (CAMELS ratings range from one to five) would require subjective translation by the Treasury into assessment levels, introducing complexity and opacity. The Treasury considered other methods to calculate assessments based on risk-weighted assets, but these proved unsatisfactory for similar reasons. After considering all of the Section 115 factors, the Treasury has determined that an assessment schedule based on total consolidated assets best achieves the statutory purpose.

As discussed further below, the rule has been modified to include a final rule applicable to bank holding companies and foreign banking organizations, and an interim final rule applicable to those entities that are identified by the Council's rulemaking for determination of nonbank financial companies for heightened supervision by the Board.

Other Assessment Methodology Comments

Two comment letters (the joint associations' letter and a second letter written by two authors of the joint letter) suggested that the Board continue providing funds to the FRF after July 21, 2012. Even if this suggestion could be reconciled with the statutory requirement that ''[b]eginning 2 years after the date of enactment,'' the Treasury shall ''collect assessments equal to the total expenses of the Office,'' [9] the imposition of additional requirements on the Board of Governors would be beyond the Treasury's authority under Section 155(d) and outside the scope of this rulemaking.[10]

One comment letter suggested that since the Council and the OFR will likely be investing a significantly larger proportion of their resources researching and monitoring nonbank financial companies as opposed to bank holding companies, the assessment methodology should charge nonbank financial companies proportionately higher assessments. The letter further suggested creation of a credit system whereby previously assessed bank holding companies and nonbank financial companies would pay lower assessment rates when new companies are assessed. The Treasury notes that the Dodd-Frank Act requires that the Council and the OFR monitor the financial system and respond to threats to U.S. financial stability across the system. Mitigating current and potential future threats to financial stability provides benefits for financial market participants, including bank holding companies, foreign banking organizations, and nonbank financial companies. Likewise, previously assessed companies, as well as newly assessed companies, are beneficiaries of these activities to mitigate threats to financial stability. For these reasons, the Treasury believes that a consistent allocation irrespective of sequence of inclusion in the assessment pool or institution type is appropriate.

One comment letter suggested including language in the rule prohibiting banking institutions from passing OFR assessments through to retail or commercial customers in the form of fees or higher interest rates. The Treasury has considered this concern, but believes such a requirement would be difficult and costly to administer, and it is questionable whether such an

[6] Section 155(d) of the Act reads:

PERMANENT SELF-FUNDING.—Beginning 2 years after the date of enactment of this Act, the Secretary shall establish, by regulation, and with the approval of the Council, an assessment schedule, including the assessment base and rates, applicable to bank holding companies with total consolidated assets of $50,000,000,000 or greater and nonbank financial companies supervised by the Board of Governors, that takes into account differences among such companies, based on the considerations for establishing the prudential standards under Section 115, to collect assessments equal to the total expenses of the Office.

Section 115(a)(2) of the Act reads, in part:

RECOMMENDED APPLICATION OF REQUIRED STANDARDS.—In making recommendations under this section, the Council may—

(A) differentiate among companies that are subject to heightened standards on an individual basis or by category, taking into consideration their capital structure, riskiness, complexity, financial activities (including the financial activities of their subsidiaries), size, and any other risk-related factors that the Council deems appropriate.

[7] Dodd-Frank Act, Title I, Section 155(d).

[8] CAMELS ratings are confidential supervisory information per 12 CFR 309.5(g)(8), 309.6, 327.4(d).

[9] Dodd-Frank Act, Title I, Section 155(d).

[10] The comment letter from the public interest group stated that OFR, the Council and implementation expenses of the FDIC should be paid solely through the FRF assessment base after July 21, 2012, as intended by the Dodd-Frank Act, and should not be paid by the Board, as suggested in the two comment letters noted above. The Treasury agrees with this comment, which is consistent with the proposed and final rules.

approach would be permitted by the law.

One comment letter suggested that FDIC expenses associated with its orderly liquidation authorities should be well-defined to avoid shifting costs to OFR that should be borne by the FDIC. The Council and the FDIC have established guidelines for these expenses to ensure that only appropriate expenses are covered by the FRF.

Some commenters raised issues related to budget process, strategy and the creation of an advisory committee that are outside the scope of this rulemaking. Materials relevant to these issues may be found in the OFR's Strategic Framework for FY2012–FY2014 published on March 15, 2012 [11] and in the notice of interest to establish a Financial Research Advisory Committee published in the **Federal Register** on March 22, 2012.[12]

Assessments on Nonbank Financial Companies

Seven of the comment letters, including those from associations that represent financial institutions and insurance companies, expressed concerns about using unadjusted total consolidated assets to allocate the assessment basis among nonbank financial companies. Three comment letters (from an insurance company and two associations) suggested that insurance separate accounts be excluded from total consolidated assets for purposes of assessments. One association suggested that private equity managed accounts be excluded from total consolidated assets for purposes of assessments. Another association suggested that all nonbank financial companies' non-financial assets be excluded from total consolidated assets for purposes of assessments.

In addition, several comment letters suggested alternative methods to assess nonbank financial companies or suggested that the Treasury delay its final rulemaking until after the Council has made determinations regarding nonbank financial companies for heightened supervision by the Board. One comment letter from an insurer suggested differentiating industries into classes based on their primary business activity and developing class-specific assessments based on Section 155 criteria. Two comment letters suggested delaying rulemaking for nonbank financial companies altogether until after the Council has made determinations of nonbank financial companies for heightened supervision by the Board. Two additional comment letters supported the intent to re-evaluate the assessment schedule for nonbank financial companies after the Council's rule on determination of nonbank financial companies is finalized and the Council has begun making determinations. One comment letter emphasized that assessments should be reasonably and fairly allocated across bank holding companies and nonbank financial companies. One comment letter requested clarification on how non-public nonbank financial companies would be treated under the rule and the manner in which information from these companies would need to be reported to the Treasury for purposes of assessments.

After reviewing these comments, the Treasury has decided to issue a final rule for bank holding companies and foreign banking organizations, and an interim final rule for nonbank financial companies. The comment period for the interim final rule for nonbank financial companies will be open for 120 days after the publication date of these rules, with possible extension. After the comment period, the Treasury will review the assessments schedule for nonbank financial companies and make adjustments to the nonbank financial company rule as necessary.

The bank holding company and foreign banking organization final rule and nonbank financial company interim final rule both rely on total consolidated assets to calculate assessable assets. The Treasury agrees that, to the extent practicable, the composition of total consolidated assets used to calculate assessable assets for nonbank financial companies, bank holding companies, and foreign banking organizations should be comparable. As the Council implements its authority to determine nonbank financial companies for heightened supervision by the Board, the Treasury will evaluate substantive accounting differences between total consolidated assets as reported by nonbank financial companies supervised by the Board, bank holding companies, and foreign banking organizations and review the need to make adjustments to its definition of total consolidated assets for nonbank financial companies.

Through its interim final rule, the Treasury continues to seek and consider comment on whether the methodology adopted here for determining the amount of the assessment for nonbank financial companies is appropriate and what alternative methodologies might be more appropriate. The Treasury also specifically seeks comments on the question of whether a single methodology for determining the amount of the assessment for nonbank financial companies is appropriate and, if not, what an appropriate framework for differentiating between nonbank financial companies might be.

Assessment Basis and Administration

The Treasury received comments on the assessment basis and assessment administration from two commenters.

One comment letter suggested that collecting 12 months of capital expenses, as opposed to six months of capital expenses, would result in an unnecessarily large amount of unused resources. Given the variability of timing for large-scale capital expenditures and the importance of avoiding unnecessary interruptions in budgeted investments, the Treasury believes it is necessary for each assessment to replenish the FRF to a total of 12 months of capital expenditures. The final rule and interim final rule retain the provision for each assessment to replenish the FRF to a level equivalent to six months of operating and 12 months of capital expenses for the FSOC and OFR.

One commenter noted that the initial assessment basis will include operating expenses through March 31, 2013, capital expenses for the OFR and the Council through April 30, 2013, and the FDIC's implementation expenses through September 30, 2013. To clarify these dates, the first assessment in July 2012 is transitional and includes operating expenses for the remainder of fiscal year 2012 (July 21, 2012 to September 30, 2012), the first six months of fiscal year 2013 (October 1, 2012 to March 31, 2013) and an amount necessary to reimburse reasonable implementation expenses of the FDIC, as provided under section 210(n)(10) of the Dodd-Frank Act. Rather than collect 12 months of capital expenses in the initial assessment, as a smoothing measure the initial assessment includes capital expenses for the remainder of FY2012 (July 21, 2012 to September 30, 2012) plus the first seven months of FY2013 capital expenses (covering October 1, 2012 to April 30, 2013), for a total of approximately nine months of capital expenses. The second assessment will bring capital funding in the FRF up to the full 12-month level contemplated in the rule.

One comment letter expressed concern that the reports used to calculate a foreign banking organization's U.S.-based assets in the

[11] The FY2012–FY2014 Strategic Framework for the OFR, which includes information on the OFR's budget process, can be found at: *http://www.treasury.gov/initiatives/wsr/ofr/Documents/OFRStrategicFramework.pdf.*

[12] 77 FR 16894.

proposed rule do not report assets on a consolidated basis, so that referencing data from multiple reports could result in double-counting. The commenter requested greater clarity on what line items will be used from each report to determine total assessable assets for foreign banking organizations and suggested that the confirmation statement sent to foreign banking organizations include a list of financial report line items used to calculate assessable assets. Treasury will make every effort to avoid double counting, consulting with the Board and the affected firms as necessary. Any questions can be addressed through the appeals process.

Assessment Timeframe

Under the proposed rule, semiannual determination dates for a typical year would be December 31 and June 30. Confirmation statements to assessed companies would be sent out approximately two weeks after the determination date (and no later than 30 days prior to the first day of the assessment period); publication of the Notice of Fees would be about one month prior to the payment date; and billing would occur at least 14 calendar days prior to the payment date. Two comment letters noted that this time schedule for assessment collections allowed too little time for assessed companies to prepare appeals to assessments and too little time for companies with less liquid portfolios to arrange payments. Ambiguities in the dates for issuance of confirmation statements and publication of the Notice of Fees were also noted in the letters. The commenters proposed extending the time between issuance of the confirmation statement and billing date to allow more time for appeals and payment arrangements.

The Treasury has considered these comments and is persuaded that an adjustment, as described below, is appropriate. In this final rule and interim final rule, the determination dates for a typical year are moved back one month (to November 30 and May 31); confirmation statements will be sent out 15 calendar days after the determination date (December 15 and June 15); written appeals requesting a redetermination would need to be provided by January 15 or July 15 (under the guidelines outlined in the NPRM); publication of the Notice of Fees will be on February 15 and August 15; and billing will be on March 1 and September 1 for payment on March 15 and September 15. (See table below.) If the Treasury receives a written request for redetermination from a company by these dates, the Treasury will consider the company's request and respond with the results of a redetermination within 21 calendar days, if the Treasury concludes that a redetermination is warranted. If one of the dates referenced falls on a holiday or weekend, aside from the Billing Date, the effective date will be the next business day. (For the Billing Date, if the date referenced falls on a holiday or weekend, the effective date will be the first preceding business day.) The initial determination date, confirmation statement date, publication of Notice of Fees, billing date, and payment date are as outlined in the NPRM. These changes to the rule will provide assessed companies additional time to prepare appeals and make payment arrangements, as well as permit the Treasury additional time to calculate assessments, administer the billing process, and receive payments, as suggested in the comment letters. The table below shows dates of the assessment billing and collection process:

Assessment period	Determination date	Confirmation statement date	Publication of notice of fees *	Billing date	Payment date
Initial Assessment (July 2012 to March 2013).	December 31, 2011	7 calendar days after final rule publication date.	About one month prior to payment date.	14 calendar days prior to payment date.	July 20, 2012.
1st semiannual Assessment (April–September).	November 30	December 15 (or next business day).	February 15 (or next business day).	March 1 (or prior business day).	March 15 (or next business day).
2nd semiannual Assessment (October–March).	May 31	June 15 (or next business day).	August 15 (or next business day).	September 1 (or prior business day).	September 15 (or next business day).

* Rate published in the Notice of Fees.

Term Definitions

Several comment letters suggested clarifications to term definitions in the rule.

One comment letter requested clarification on the conditions and procedure under which a company would cease to be an assessed company. Another comment letter stated that companies that cease to be assessable companies between the initial determination date and start of the initial assessment period should not be assessed.

Under the definitions provided in this rule, companies meeting the following conditions will not be determined to be assessable companies on the determination date:

- For bank holding companies as defined in Section 2 of the Bank Holding Company Act of 1956, the average total consolidated assets (Schedule HC—Consolidated Balance Sheet), as reported on the bank holding company's four most recent Consolidated Financial Statements for Bank Holding Companies (FR Y–9C; OMB No. 7100–0128) submissions, is below $50 billion;
- For foreign banking organizations, the average of total assets at the end of a period (Part 1—Capital and Asset Information for the Top-tier Consolidated Foreign Banking Organization), as reported on the foreign banking organization's four most recent Capital and Asset Information for the Top-tier Consolidated Foreign Banking Organization (FR Y–7Q; OMB no. 7100–0125), is below $50 billion; [13]
- For nonbank financial companies, the company is not determined by the Council to be required to be supervised by the Board under Section 113 of the Dodd-Frank Act.

Companies that are determined to be assessable companies on the determination date for an assessment period will be assessed for that assessment period according to the rule. The assessment schedule is structured so that the sum of assessments on individual companies equals the sum

[13] For those foreign banking organizations that file the FR Y–7Q annually instead of quarterly, the company's total consolidated assets would be determined based on the average of total assets at end of period as reported on the foreign banking organization's two most recent FR Y–7Qs.

total necessary to support the duties of the Council and the OFR during each period plus implementation expenses associated with the FDIC's orderly liquidation authorities. Changes to one company's assessment for a particular period would necessitate a change in all other companies' assessments so that the aggregate of all assessment fees equals the assessment basis for the period. The Treasury believes that the burden and uncertainty that such changes would bring are too high to warrant attempting to delineate a process to allow changes to the information used by the Treasury to make its determinations, or adjust the company's semiannual fee determined by the published assessment fee schedule. The Treasury believes this burden and uncertainty would be issues for the initial assessment period as they are for subsequent assessment periods.

One comment letter requested the rule include a list of financial reports that will be used to calculate total assessable assets for foreign banking organizations. While the list of financial reports that the Treasury anticipates it will use to calculate total assessable assets for foreign banking organizations are listed in the Preamble of the NPRM, it is possible that reporting requirements for foreign banking organizations will change over time and the list of reports will need to be adjusted. The rule does not include specific reference to these reports to allow for the possibility of these changes. The Treasury will provide a list of reports used to calculate assessments to any assessed company, and will also maintain a list of reports used to calculate assessments on its Web site for reference in advance of the assessment period.

One comment letter requested that the definition of total assessable assets for foreign banking organizations be clarified to include U.S. branches and agencies in addition to subsidiaries. The definition of total assessable assets for foreign banking organizations in Section 150.2 has been modified to provide this clarity.

One comment letter requested that the rule provide clarity that total assessable assets for foreign banking organizations will be calculated as the average of the four most recent FR Y7–Q total assets at end of period for quarterly filers and the average of the two most recent annual FR Y7–Q total assets at end of period for annual filers. (This distinction was provided in the Preamble of the NPRM but not the text of the rule.) For reasons noted above, the Treasury has not included a list of reference reports in the final rule, but language was added to the rule clarifying that the average of four quarters of data will be used to calculate assessments for quarterly filers and the average of two years of annual data will be used to calculate assessments for annual filers.

One comment letter requested that the definition of ''bank holding company'' and ''foreign banking organization'' be clarified so that foreign banking organizations are limited to international banks that are subject to the Bank Holding Company Act of 1956 pursuant to Section 8(a) of the International Banking Act of 1978. The letter suggested modifying the definition of ''bank holding company'' to specify U.S.-domiciled bank holding companies and modify the definition of ''foreign banking organization'' to incorporate by reference the definition of that term in Section 211.21(o) of the Board's Regulation K. The letter also suggested revising paragraphs (1) and (2) of the definition of total assessable assets to reflect these revisions. The final rule clarifies these definitions accordingly.

One comment letter suggested that the final rule clarify that only total assets of combined U.S. operations of U.S. companies with foreign affiliates would be assessable. The Dodd-Frank Act is silent on this point. However, the Dodd-Frank Act requires that the Council and the OFR monitor the financial system and respond to threats to U.S. financial stability across the system. Mitigating current and potential future threats to financial stability provides particular benefits for companies that conduct a majority of their business in U.S. markets. Treasury also notes that a significant disruption to foreign operations could impact the parent company, and where the parent company is a U.S. entity, it may have consequences for U.S. financial stability. The rule consequently retains calculation of total assessable assets for U.S.-based companies based on global total consolidated assets.

Comments of General Support

The two letters from individuals expressed general support for the rule. One comment letter expressed support for assessing financial institutions to fund the Office. One comment letter expressed support for the permanent self-funding provisions reflected in the rule and the mission of the Office.

III. Procedural Requirements

A. Regulatory Flexibility Act

The Regulatory Flexibility Act (RFA), 5 U.S.C. 601 *et seq.,* requires agencies to prepare an initial regulatory flexibility analysis (IRFA) to determine the economic impact of the rule on small entities. Section 605(b) allows an agency to prepare a certification in lieu of an IRFA if the rule will not have a significant economic impact on a substantial number of small entities. Pursuant to 5 U.S.C. 605(b), it is hereby certified that this rule will not have a significant economic impact on a substantial number of small entities. The size standard for determining whether a bank holding company or a nonbank financial company is small is $7 million in average annual receipts. Under Section 155 of the Dodd-Frank Act, only bank holding companies with more than $50 billion in total consolidated assets or nonbank financial companies regulated by the Federal Reserve will be subject to assessment. As such, this rule will not apply to small entities and a regulatory flexibility analysis is not required.

B. Paperwork Reduction Act

On a one-time basis, assessed entities would be required to set up a bank account for fund transfers and provide the required information to the Treasury Department on a form. The form includes bank account routing information and contact information for the individuals at the company that will be responsible for setting up the account and ensuring that funds are available on the billing date. The Treasury Department estimates that approximately 50 companies [14] may be affected, and that completing and submitting the form would take approximately fifteen minutes. The aggregate paper work burden is estimated at 12.5 hours.

On a semi-annual basis, assessed companies will have the opportunity to review the confirmation statement and assessment bill. The rules do not require the companies to conduct the review, but it does permit it. We anticipate that at least some of the companies will conduct reviews, in part because the cost associated with it is very low.

The collection of information contained in this rule has been approved by the Office of Management and Budget (OMB) under the requirements of the Paperwork Reduction Act, 44 U.S.C. 3507(d) and assigned control number 1505–0245. An agency may not conduct or sponsor an a person is not required to respond to

[14] The Treasury estimates that approximately 50 bank holding companies and foreign banking organizations will be assessed in the initial assessment. The number of eligible bank holding companies and foreign banking organizations could increase or decrease over time. The number of assessed companies could also increase if the Council determines nonbank financial companies for heightened supervision by the Board.

a collection of information unless it displays a valid OMB control number.

The information collections are included in § 150.6.

C. Regulatory Planning and Review (Executive Orders 12866 and 13563)

It has been determined that this regulation is a significant regulatory action as defined in Executive Order 12866 as supplemented by Executive Order 13563, in that this rule would have an annual effect on the economy of $100 million or more. Accordingly, this rule has been reviewed by the Office of Management and Budget. The Regulatory Impact Assessment prepared by Treasury for this regulation is provided below.

1. Description of Need for the Regulatory Action

Section 155 of the Dodd-Frank Act directs the Board to provide funding sufficient to cover the expenses of the OFR and FSOC during the two-year period following enactment. (The Dodd-Frank Act was enacted on July 21, 2010.) To provide funding after July 21, 2012, Section 155(d) of the Dodd-Frank Act directs the Secretary of the Treasury to establish by regulation, and with the approval of the FSOC, an assessment schedule for bank holding companies with total consolidated assets of $50 billion or greater and nonbank financial companies supervised by the Board.

2. Provision—Affected Population

Section 155(d) of the Dodd-Frank Act defines the population of assessed companies as bank holding companies with total consolidated assets of $50 billion or greater and nonbank financial companies supervised by the Board.

Under this definition, U.S bank holding companies and foreign banking organizations with $50 billion or more in total worldwide consolidated assets and nonbank financial companies supervised by the Board qualify for assessment. However, under the rule only U.S.-based assets of foreign banking organizations would be used to calculate their assessments. Foreign banking organizations with less than $50 billion in U.S.-based assets would not be assessed. Based on information provided by the Board, we estimate that forty-eight bank holding companies qualified as assessed companies as of June 30, 2011.

Nonbank financial companies determined by the FSOC to require heightened supervision under Title I would be assessed on the basis of their total consolidated assets for U.S. entities and on the basis of total consolidated assets of U.S. operations for foreign entities, similar to bank holding companies. All such nonbank financial companies would be assessed, regardless of their level of total consolidated assets.[15]

3. Baseline

The Dodd-Frank Act established the FSOC and the OFR, and vested the FDIC with orderly liquidation authorities. Prior to passage of the Act, these entities and authorities did not exist. Expenses associated with these activities are directed by the Dodd-Frank Act to be funded by the Board for a two-year period to end on July 21, 2012. After July 21, 2012, the Dodd-Frank Act requires the Secretary of the Treasury establish an assessment schedule by regulation, with approval by the Council, to collect funds necessary to cover these expenses. There is no provision in the Dodd-Frank Act for the FSOC or the OFR to receive appropriated funds. Section 152(e) of the Dodd-Frank Act allows departments or agencies of government to provide funds, facilities, staff, and other support services to the OFR as the OFR may determine advisable. Section 152(e) and Section 111(j) allow for employees of the Federal Government to be detailed to the OFR and the FSOC, respectively, without reimbursement. Funding through departments or agencies of government would not be sufficient to perform all of the functions of the FSOC, the OFR, and the FDIC required by the Act. Agencies funded by appropriations would be restricted in the amount of funding support they could provide to the FSOC or the OFR. Agencies not funded by appropriations would be restricted in the amount of funding support they could provide for activities outside their primary mandate. Restrictions on the availability of funds or lack of predictability of funding would make it difficult to maintain consistent program activities, and complete analysis required to identify possible threats to financial stability. The implementation of this rule is not expected to have a discernible effect on the structure of the financial sector.

[15] To date, the Council has not made a determination regarding the applicability of Board supervision under section 113 for a nonbank financial company. Moreover, it is unclear as to what type of nonbank financial companies the Council may consider for a determination. For these reasons, as the Council begins to make determinations regarding nonbank financial companies under section 113, the Treasury's methodology for determining the assessment fee for these companies would be reviewed and, as needed, revised through the rulemaking process to assure that the assessment fees charged to these companies would be appropriate.

4. Assessment of Total Fees Collected

It is anticipated that the annual assessments for the FRF will exceed $100 million, making the rule a significant regulatory action as defined in Executive Order 12866.

The assessment and collection of fees described in this rule represent an economic transfer from assessed companies to the government, for purposes of providing the benefits described above. As such, the assessments do not represent an economic cost for purposes of this analysis. However, the allocation of the assessment may have distributional impacts.

There is a wide range of possible assessment schedules which could be used to collect funds for the OFR and the FSOC. For example, the schedule could be structured to charge eligible companies a similar fee, it could include tiered fees and rates, or it could include assessments for all eligible companies as opposed to just entities with $50 billion in U.S.-based assets (i.e., including foreign banking organizations with more than $50 billion in worldwide assets but less than $50 billion in U.S.-based assets). Having a simple, more transparent assessment schedule reduces costs for government and for assessed companies by making assessments easier to calculate, budget for, and manage administratively. Executive Order 12866 specifically requires that agencies ''design its regulations in the most cost-effective manner to achieve the regulatory objective.''

The selection of the assessment schedule was governed by two guiding principles:

- The assessment structure should be simple and transparent; and
- Allocation should take into account differences among such companies, based on the considerations for establishing the prudential standards under section 115 of the Dodd-Frank Act as required by the Act.

Under Section 155 of the Act, the assessment schedule is required to take into account criteria for establishing prudential standards for supervision and regulation of large bank holding companies and nonbank financial companies as described in Section 115 of the Act. The criteria in Section 115 include: ''Capital structure, riskiness, complexity, financial activities (including the financial activities of subsidiaries), size, and any other risk-related factors that the Council deems appropriate.'' Selection of total consolidated assets as the basis for assessments was intended to take into

account the criteria identified in Section 115, while providing a more transparent and administratively cost effective metric. Using other risk-related metrics as a base for calculation could dramatically increase the cost of calculating assessments, as well as reduce a company's ability to project their assessment level. As of June 30, 2011, companies meeting the criteria for assessment had $18.7 trillion in total consolidated assets.

Under the assessment structure, each assessed company's eligible assets would be multiplied by an assessment fee rate to determine their assessment amount. (Eligible assets would be total worldwide consolidated assets for U.S.-based bank holding companies and designated U.S.-based nonbank financial companies, and total U.S.-based assets for foreign banking organizations and foreign designated nonbank financial companies.) Assessments would be made semiannually, generally based on an average of the company's last four quarters of total consolidated assets.

For example, based on data on assessable assets as of June 30, 2011, for every $100 million collected the range of assessments would be $280,000 for the smallest assessed company (with just over $50 billion in assets) to $12.5 million for the largest assessed company (with approximately $2.3 trillion in assets).[16] Assessments on the ten largest assessed companies would provide roughly two-thirds of the total assessed amount.

Based on currently available data, no assessed company will have less than $50 billion in assets; thus no small businesses are directly affected by the regulation. Under the structure of the rule, the only assessed companies that could have less than $50 billion in assets would be nonbank financial companies subject to enhanced prudential supervision by the Board. While no such determinations have yet been made, Treasury believes that the FSOC will not make such a determination for any nonbank financial company that is a small business. It is not anticipated that the regulation will unduly interfere with state, local, and tribal governments in the exercise of their governmental functions.

We estimate that there are certain direct costs associated with complying with these rules. On a one-time basis, assessed entities would be required to set up a bank account for fund transfers and provide the required information to the Treasury Department through an information collection form. The information collection form includes bank account routing information and contact information for the individuals at the company that will be responsible for setting up the account and ensuring that funds are available on the billing date. We estimate that approximately 50 companies could be affected, and that the cost associated with filling out the form and submitting it to the Treasury Department is approximately $600.[17] We note that this represents a conservative estimate of costs as some of these companies may have already established an account for payments or collections to the U.S. government.

On a semi-annual basis, assessed companies will have the opportunity to review the confirmation statement and assessment bill. The rules do not require the companies to conduct the review, but it does permit it. We anticipate that at least some of the companies will conduct reviews, in part because the cost associated with it is very low.

5. Alternative Approaches Considered

We have noted that there are many possible assessment structures which could be employed to collect assessments. As part of the rulemaking process, Treasury contemplated a variety of structures for determining how assessments would be allocated. Particularly, Treasury considered alternate approaches with regard to the complexity of the method of assessment. In addition, Treasury considered alternative approaches with the following features: (1) Approaches designed to charge assessed companies at a similar fee level, distributing collections more evenly; (2) approaches designed to charge different rates for different levels of total consolidated assets, creating a ''tiered'' structure of rates; and (3) approaches designed to charge eligible bank holding companies and foreign banking organizations against world-wide assets, as opposed to charging foreign banking organizations against U.S.-based assets. We discuss these alternative approaches below.

a. Complexity of Approach

In evaluating methodologies for determining individual company assessments, the Treasury notes that there has been a variety of assessment approaches employed by other federal and international agencies which incorporate measures of risk that are similar to the considerations mentioned in Section 115 of the Dodd-Frank Act. For example, Basel III capital adequacy standards set minimum capital requirements based on risk-weighted assets and also provide a mandatory capital conservation buffer and a discretionary countercyclical buffer. The risk-based calculations incorporate capital tiers, leverage, credit valuation adjustments, and other factors. As required by the Dodd-Frank Act, the FDIC recently revised how banks are charged deposit insurance assessments. With some minor exceptions, the FDIC assessment base is total consolidated assets minus tangible equity.

In the U.S., the FDIC uses the CAMELS system to assign risk ranking to its regulated banks. As suggested by commenters, the Treasury considered using CAMELS as a classification system for assigning relative assessments, but deemed the approach inappropriate as the methodology used to produce CAMELS ratings is non-public, the ratings are confidential supervisory information, and the rating system was developed to apply to U.S. depository institutions. The system also provides broad rankings (ranging from one to five) which would require subjective translation into assessment levels.

In each of these cases, and in other related determinations, the complexity of the assessment methodology is tied to the goal of the charge. For instance, the Dodd-Frank Act requires the Board to collect assessments designed to cover the costs of heightened regulation and supervision of large bank holding companies, large savings and loan holding companies, and nonbank financial companies supervised by the Board.

In evaluating these arrangements, Treasury notes that complexity in the assessment design increases the administrative burden to assessed companies, including planning for those assessments, and decreases transparency to the public. Treasury does not believe that the benefits of a complex methodology justify their increased costs in the context of this rulemaking.

[16] Semiannual assessments will be set to maintain FRF balance at 12 months of budgeted capital expenses and six months of budgeted operating expenses. The initial assessment basis would be equivalent to the budgeted expenses for the end of fiscal year 2012 (July 20, 2012 to September 30, 2012), seven months of budgeted capital expenses and six months of budgeted operating expenses for FY 2013.

[17] The cost of this activity is calculated by multiplying the 50 companies by the time it takes to complete the form (15 minutes) by an approximate hourly wage of $48 (assuming an annual salary of $100,000).

b. Charging Companies Fees at a Similar Level

Section 155 of the Dodd-Frank Act requires that the assessment schedule take into account criteria for establishing prudential standards for supervision and regulation of large bank holding companies and nonbank financial companies as described in Section 115 of the Act. The criteria in Section 115 include: ''capital structure, riskiness, complexity, financial activities (including the financial activities of subsidiaries), size, and any other risk-related factors that the Council deems appropriate.'' The option of charging companies at a similar level was rejected as it would appear to contradict the intent of the Act for the schedule to charge larger, more complex and riskier firms higher fees. On the basis of size alone, we estimate that the largest eligible companies have over 40 times the assessable assets of smallest companies.

c. Charging Fees Under a Tiered Rate Structure

A number of regulators rely on tiered assessment schedules to collect fees. The Office of the Comptroller of the Currency uses a tiered assessment structure to collect fees associated with regulating and supervising national banks. The Office of Thrift Supervision used a tiered structure to collect fees to regulate and supervise thrifts. The main benefit of a tiered structure is that it allows fees to be charged at different rates to different companies. For example, supervision may benefit from economies of scale, meaning that the additional resources required for supervision do not grow dollar for dollar with the size of the entity. Alternatively, larger companies may pose risks that are disproportionately larger than their asset size, requiring even more resources for supervision than do smaller companies. A tiered approach could accommodate such differences by allowing different fee rates to be charges against assessed assets by tier.

Consideration was given to establishing such a structure for FRF assessments. The primary benefit would have been greater flexibility in determining the relative amounts assessed on larger companies versus smaller companies. However, these benefits were balanced against an interest for assessment fees to be reasonably estimable and simpler to calculate, reducing administrative costs both for assessed companies and the Treasury, improving transparency, and allowing companies to better anticipate assessment amounts. Given that all assessed companies are large (generally with over $50 billion in assets) and systemically important, and the activities of the FSOC, the OFR, and implementation expenses of the FDIC correspond to all of them, the relative benefits of a tiered structure over a fixed rate structure were unclear.

d. Charging All Eligible Bank Holding Companies

Based on the definition of ''bank holding company'' in Title I of the Dodd-Frank Act, assessments can be made against any foreign banking organizations with $50 billion or more in total consolidated assets. Since many of these eligible foreign banking companies have a relatively small percentage of their operations in the United States, there is limited basis for assessing these companies. Consideration was given to charging a small fee, so that all eligible companies would be charged, but the additional costs associated with administering the fee and cost of compliance by these companies outweighed the perceived benefits of this choice. The final determination was to charge foreign banking organizations with $50 billion or more in total U.S.-based assets and U.S. based bank holding companies with $50 billion or more in total consolidated assets.

D. Congressional Review Act

The Congressional Review Act, 5 U.S.C. 801 *et seq.,* generally provides that before a rule may take effect, the agency promulgating the rule must submit a rule report, which includes a copy of the rule, to each House of the Congress and to the Comptroller General of the United States. A major rule cannot take effect until 60 days after it is published in the **Federal Register**. This action is a ''major rule'' as defined by 5 U.S.C. 804(2) and will be effective 60 days after publication.

E. Unfunded Mandates Reform Act

The Unfunded Mandates Reform Act of 1995 (2 U.S.C. 1531–1538) requires federal agencies to assess the effects of their discretionary regulatory actions. In particular, the Act addresses actions that may result in the expenditure by a state, local, or tribal government, in the aggregate, or by the private sector of $100,000,000 (adjusted for inflation) or more in any one year. Treasury believes that the regulatory impact analysis provides the analysis required by the Unfunded Mandates Reform Act.

F. Administrative Procedure Act

The Administrative Procedure Act (5 U.S.C. 551 *et seq.*) (APA) generally requires public notice and comment procedures before promulgation of regulations. See 5 U.S.C. 553(b). The Treasury published a notice of proposed rulemaking requesting comment on the proposed rule on January 3, 2012. The Treasury is finalizing the rule as it relates to bank holding companies without an opportunity for additional comment.

The comments that relate to nonbank financial companies have been considered but have not been fully addressed in this interim rule because the Department believes the rulemaking would benefit from additional public comment prior to establishing it as a final rule.

The Department believes, however, that good cause exists under 5 U.S.C. 553(b) to effectuate the rule as it relates to nonbank financial companies on an interim basis. As discussed in this preamble, nonbank financial companies supervised by the Board pursuant to section 113 of the Dodd-Frank Act are subject to assessments. To date, no nonbank financial company has been subject to the section 113 supervision. Once designated by the Council and subject to Board supervision, a nonbank financial company will also be subject to assessments under the Dodd-Frank Act. In order to be consistent with the requirements of section 155 of the Act in assessing designated nonbank financial companies, the Treasury finds that it would be impracticable and contrary to the public interest to delay implementation of the rule pending further public comment. To implement the rule only as it relates to bank holding companies would impose an increased burden on bank holding companies and prevent the collection from designated nonbank financial companies of the assessments required to be imposed by statute. Accordingly, the Treasury is effectuating the rule as it relates to nonbank financial companies, but also invites public comment on portions of §§ 150.2, 150.3, 150.4, 150.5, and 150.6 as they relate to nonbank financial companies.

List of Subjects in 31 CFR Part 150

Bank holding companies, Nonbank financial companies, Financial research fund.

For the reasons set forth in the preamble, the Treasury amends Title 31, Chapter I of the Code of Federal Regulations by adding part 150 to read as follows:

PART 150—FINANCIAL RESEARCH FUND

Sec.
150.1 Scope.
150.2 Definitions.
150.3 Determination of assessed companies.
150.4 Calculation of assessment basis.
150.5 Calculation of assessments.
150.6 Notice and payment of assessments.

Authority: 12 U.S.C. 5345; 31 U.S.C. 321.

§ 150.1 Scope.

The assessments contained in this part are made pursuant to the authority contained in 12 U.S.C. 5345.

§ 150.2 Definitions.

As used in this part:

Assessed company means:

(1) A bank holding company that has $50 billion or more in total consolidated assets, based on the average of total consolidated assets as reported on the bank holding company's four most recent quarterly Consolidated Financial Statements for Bank Holding Companies (or, in the case of a foreign banking organization, based on the average of total assets at end of period as reported on such company's four most recent quarterly Capital and Asset Information for the Top-tier Consolidated Foreign Banking Organization submissions if filed quarterly, or two most recent annual submissions if filed annually, as appropriate); or

(2) A nonbank financial company required to be supervised by the Board under section 113 of the Dodd-Frank Act.

Assessment basis means, for a given assessment period, an estimate of the total expenses that are necessary or appropriate to carry out the responsibilities of the Office and the Council as set out in the Dodd-Frank Act (including an amount necessary to reimburse reasonable implementation expenses of the Corporation that shall be treated as expenses of the Council pursuant to section 210(n)(10) of the Dodd-Frank).

Assessment fee rate, with regard to a particular assessment period, means the rate published by the Department for the calculation of assessment fees for that period.

Assessment payment date means:

(1) For the initial assessment period, July 20, 2012;

(2) For any semiannual assessment period ending on March 31 of a given calendar year, September 15 of the prior calendar year; and

(3) For any semiannual assessment period ending on September 30 of a given calendar year, March 15 of the same year.

Assessment period means any of:

(1) The initial assessment period; or

(2) Any semiannual assessment period.

Bank holding company means:

(1) A bank holding company as defined in section 2 of the Bank Holding Company Act of 1956 (12 U.S.C. 1841); or

(2) A foreign banking organization.

Board means the Board of Governors of the Federal Reserve System.

Corporation means the Federal Deposit Insurance Corporation.

Council means the Financial Stability Oversight Council established by section 111 of the Dodd-Frank Act.

Department means the Department of the Treasury.

Determination date means:

(1) For the initial assessment period, December 31, 2011.

(2) For any semiannual assessment period ending on March 31 of a given calendar year, May 31 of the prior calendar year.

(3) For any semiannual assessment period ending on September 30 of a given calendar year, November 30 of the prior calendar year.

Dodd-Frank Act means the Dodd-Frank Wall Street Reform and Consumer Protection Act.

Foreign banking organization means a foreign bank or company that is treated as a bank holding company for purposes of the Bank Holding Company Act of 1956, pursuant to section 8(a) of the International Banking Act of 1978 (12 U.S.C. 3106(a)).

Initial assessment period means the period of time beginning on July 20, 2012 and ending on March 31, 2013.

Office means the Office of Financial Research established by section 152 of the Dodd-Frank Act.

Semiannual assessment period means:

(1) Any period of time beginning after the initial assessment period on October 1 and ending on March 31 of the following calendar year; or

(2) Any period of time beginning after the initial assessment period on April 1 and ending on September 30 of the same calendar year.

Total assessable assets means:

(1) For a bank holding company other than a foreign banking organization, the average of total consolidated assets for the four quarters preceding the determination date, as reported on the bank holding company's four most recent FR Y–9C filings;

(2) For any other bank holding company that has $50 billion or more in total consolidated assets, the average of the company's total assets of combined U.S. operations for the four quarters preceding the determination date, based on the combined total assets of the foreign banking organization's U.S. branches, agencies, and subsidiaries as reported on the foreign banking organization's four most recent quarterly financial reports, or, if the company only files financial reports annually, the average of the company's total assets of combined U.S. operations for the two years preceding the determination date, based on the combined total assets of the foreign banking organization's U.S. branches, agencies, and subsidiaries as reported on the foreign banking organization's two most recent annual financial reports; or

(3) For a nonbank financial company supervised by the Board under section 113 of the Dodd-Frank Act, either the average of total consolidated assets for the four quarters preceding the determination date, if the company is a U.S. company, or the average of total assets of combined U.S. operations for the four quarters preceding the determination date, if the company is a foreign company.

§ 150.3 Determination of assessed companies.

(a) The determination that a bank holding company or a nonbank financial company is an assessed company will be made by the Department.

(b) The Department will apply the following principles in determining whether a company is an assessed company:

(1) For tiered bank holding companies for which a holding company owns or controls, or is owned or controlled by, other holding companies, the assessed company shall be the top-tier, regulated holding company.

(2) In situations where more than one top-tier, regulated bank holding company has a legal authority for control of a U.S. bank, each of the top-tier regulated holding companies shall be designated as an assessed company.

(3) In situations where a company has not filed four consecutive quarters of the financial reports referenced above for the most recent quarters (or two consecutive years for annual filers of the FR Y–7Q or successor form), such as may be true for companies that recently converted to a bank holding company, the Department will use, at its discretion, other financial or annual reports filed by the company, such as Securities and Exchange Commission (SEC) filings, to determine a company's total consolidated assets.

(4) In situations where a company does not report total consolidated assets in its public reports or where a company uses a financial reporting methodology other than U.S. GAAP to report on its

U.S. operations, the Department will use, at its discretion, any comparable financial information that the Department may require from the company for this determination.

(c) Any company that the Department determines is an assessed company on a given determination date will be an assessed company for the entire assessment period related to such determination date, and will be subject to the full assessment fee for that assessment period, regardless of any changes in the company's assets or other attributes that occur after the determination date.

§ 150.4 Calculation of assessment basis.

(a) For the initial assessment period, the Department will calculate the assessment basis such that it is equivalent to the sum of:

(1) Budgeted operating expenses for the Office for the period beginning July 21, 2012 and ending March 31, 2013;

(2) Budgeted operating expenses for the Council for the period beginning July 21, 2012 and ending March 31, 2013;

(3) Capital expenses for the Office for the period beginning July 21, 2012 and ending April 30, 2013; and

(4) Capital expenses for the Council for the period beginning July 21, 2012 and ending April 30, 2013; and

(5) An amount necessary to reimburse reasonable implementation expenses of the Federal Deposit Insurance Corporation as provided under section 210(n)(10) of the Dodd-Frank Act.

(b) For each subsequent assessment period, the Department will calculate an assessment basis that shall be sufficient to replenish the Financial Research Fund to a level equivalent to the sum of:

(1) Budgeted operating expenses for the Office for the applicable assessment period;

(2) Budgeted operating expenses for the Council for the applicable assessment period;

(3) Budgeted capital expenses for the Office for the 12-month period beginning on the first day of the applicable assessment period;

(4) Budgeted capital expenses for the Council for the 12-month period beginning on the first day of the applicable assessment period; and

(5) An amount necessary to reimburse reasonable implementation expenses of the Federal Deposit Insurance Corporation as provided under section 210(n)(10) of the Dodd-Frank Act.

§ 150.5 Calculation of assessments.

(a) For each assessed company, the Department will calculate the total assessable assets in accordance with the definition in § 150.2.

(b) The Department will allocate the assessment basis to the assessed companies in the following manner:

(1) Based on the sum of all assessed companies' total assessable assets, the Department will calculate the assessment fee rate necessary to collect the assessment basis for the applicable assessment period.

(2) The assessment payable by an assessed company for each assessment period shall be equal to the assessment fee rate for that assessment period multiplied by the total assessable assets of such assessed company.

(3) Foreign banking organizations with less than $50 billion in total assessable assets shall not be assessed.

§ 150.6 Notice and payment of assessments.

(a) No later than fifteen calendar days after the determination date (or, in the case of the initial assessment period, no later than seven days after the publication date of this rule), the Department will send to each assessed company a statement that:

(1) Confirms that such company has been determined by the Department to be an assessed company; and

(2) States the total assessable assets that the Department has determined will be used for calculating the company's assessment.

(b) If a company that is required to make an assessment payment for a given semiannual assessment period believes that the statement referred to in paragraph (a) of this section contains an error, the company may provide the Department with a written request for a revised statement. Such request must be received by the Department via email within one month and must include all facts that the company requests the Department to consider. The Department will respond to all such requests within 21 calendar days of receipt thereof.

(c) No later than the 14 calendar days prior to the payment date for a given assessment period, the Department will send an electronic billing notification to each assessed company, containing the final assessment that is required to be paid by such assessed company.

(d) For the purpose of making the payments described in § 150.5, each assessed company shall designate a deposit account for direct debit by the Department through *www.pay.gov* or successor Web site. No later than the later of 30 days prior to the payment date for an assessment period, or the effective date of this rule, each such company shall provide notice to the Department of the account designated, including all information and authorizations required by the Department for direct debit of the account. After the initial notice of the designated account, no further notice is required unless the company designates a different account for assessment debit by the Department, in which case the requirements of the preceding sentence apply.

(e) Each assessed company shall take all actions necessary to allow the Department to debit assessments from such company's designated deposit account. Each such company shall, prior to each assessment payment date, ensure that funds in an amount at least equal to the amount on the relevant electronic billing notification are available in the designated deposit account for debit by the Department. Failure to take any such action or to provide such funding of the account shall be deemed to constitute nonpayment of the assessment. The Department will cause the amount stated in the applicable electronic billing notification to be directly debited on the appropriate payment date from the deposit account so designated.

(f) In the event that, for a given assessment period, an assessed company materially misstates or misrepresents any information that is used by the Department in calculating that company's total assessable assets, the Department may at any time re-calculate the assessment payable by that company for that assessment period, and the assessed company shall take all actions necessary to allow the Department to immediately debit any additional payable amounts from such assessed company's designated deposit account.

(g) If a due date under this section falls on a date that is not a business day, the applicable date shall be the next business day.

Dated: May 14, 2012.

Mary Miller,

Under Secretary for Domestic Finance, Department of the Treasury.

[FR Doc. 2012–12047 Filed 5–18–12; 8:45 am]

BILLING CODE 4810–25–P

DEPARTMENT OF HOMELAND SECURITY

Coast Guard

33 CFR Part 117

[Docket No. USCG–2011–0937]

Drawbridge Operation Regulation; Black River, La Crosse, WI

AGENCY: Coast Guard, DHS.

ACTION: Notice of temporary deviation from regulations; request for comments.

SUMMARY: The Coast Guard has issued a temporary deviation from the operating schedule that governs the Canadian Pacific Railroad Drawbridge across the Black River, at Mile 1.0, near La Crosse, Wisconsin. This deviation is related to a Notice of Proposed Rulemaking (NPRM) under the same docket number and will test a change to the drawbridge operation schedule to determine whether a permanent change to the schedule is needed as proposed by the NPRM. This deviation will allow remote operation of the drawspan. Remote operation will enable the bridge to open on demand, instead of with a two-hour delay as it is currently operated when the on-site bridge tender is present.

DATES: This deviation is effective from 12:01 a.m. on June 15, 2012 to 11:59 p.m. on July 15, 2012. Comments and related material must be received by the Coast Guard by August 15, 2012.

ADDRESSES: You may submit comments identified by docket number USCG–2011–0937 using any one of the following methods:

(1) *Federal eRulemaking Portal: http://www.regulations.gov.*

(2) *Fax:* 202–493–2251.

(3) *Mail:* Docket Management Facility (M–30), U.S. Department of Transportation, West Building Ground Floor, Room W12–140, 1200 New Jersey Avenue SE., Washington, DC, 20590–0001.

(4) *Hand delivery:* Same as mail address above, between 9 a.m. and 5 p.m., Monday through Friday, except Federal holidays. The telephone number is 202–366–9329.

To avoid duplication, please use only one of these four methods. See the ''Public Participation and Request for Comments'' portion of the **SUPPLEMENTARY INFORMATION** section below for instructions on submitting comments.

FOR FURTHER INFORMATION CONTACT: If you have questions on this rule, call or email Mr. Eric Washburn, Bridge Administrator, Western Rivers, (314) 269–2378, *email Eric.Washburn@uscg.mil.* If you have questions on viewing or submitting material to the docket, call Renee V. Wright, Program Manager, Docket Operations, telephone 202–366–9826.

SUPPLEMENTARY INFORMATION:

Public Participation and Request for Comments

We encourage you to participate in this rulemaking by submitting comments and related materials. All comments received will be posted without change to *http://www.regulations.gov* and will include any personal information you have provided.

1. Submitting Comments

If you submit a comment, please include the docket number for this rulemaking, indicate the specific section of this document to which each comment applies, and provide a reason for each suggestion or recommendation. You may submit your comments and material online at *http://www.regulations.gov,* or by fax, mail, or hand delivery, but please use only one of these means. If you submit a comment online, it will be considered received by the Coast Guard when you successfully transmit the comment. If you fax, hand deliver, or mail your comment, it will be considered as having been received by the Coast Guard when it is received at the Docket Management Facility. We recommend that you include your name and a mailing address, an email address, or a telephone number in the body of your document so that we can contact you if we have questions regarding your submission.

To submit your comment online, go to *http://www.regulations.gov,* type the docket number in the ''SEARCH'' box and click ''SEARCH.'' Click on ''Submit a Comment'' on the line associated with this rulemaking.

If you submit your comments by mail or hand delivery, submit them in an unbound format, no larger than 8½ by 11 inches, suitable for copying and electronic filing. If you submit comments by mail and would like to know that they reached the Facility, please enclose a stamped, self-addressed postcard or envelope. We will consider all comments and material received during the comment period and may change the rule based on your comments.

2. Viewing Comments and Documents

To view comments, as well as documents mentioned in this preamble as being available in the docket, go to *http://www.regulations.gov,* type the docket number in the ''SEARCH'' box and click ''SEARCH.'' Click on Open Docket Folder on the line associated with this rulemaking. You may also visit the Docket Management Facility in Room W12–140 on the ground floor of the Department of Transportation West Building, 1200 New Jersey Avenue SE., Washington, DC 20590, between 9 a.m. and 5 p.m., Monday through Friday, except Federal holidays.

3. Privacy Act

Anyone can search the electronic form of comments received into any of our dockets by the name of the individual submitting the comment (or signing the comment, if submitted on behalf of an association, business, labor union, etc.). You may review a Privacy Act notice regarding our public dockets in the January 17, 2008, issue of the **Federal Register** (73 FR 3316).

4. Public Meeting

We do not now plan to hold a public meeting. But you may submit a request for one using one of the four methods specified under **ADDRESSES**. Please explain why one would be beneficial. If we determine that one would aid this rulemaking, we will hold one at a time and place announced by a later notice in the **Federal Register**. For information on facilities or services for individuals with disabilities or to request special assistance at the public meeting, contact Mr. Eric Washburn at the telephone number or email address indicated under the **FOR FURTHER INFORMATION CONTACT** section of this notice.

Regulatory and History Information

On November 14, 2011, we published a notice of proposed rulemaking (NPRM) entitled Drawbridge Operation Regulation; Black River, La Crosse, Wisconsin, in **Federal Register** (76 FR 70384). We received no comment letters on the rule. On November 29, 2011, we held a public meeting, at which no objections were presented against the rule. Although no comments were received, it has been determined to be in the interest of local recreational boating public to enact this test deviation and gauge its effects on waterway users during the peak navigation season. If no comments are received during this deviation period, it is anticipated a permanent rule change will be enacted.

Basis and Purpose

The Canadian Pacific Railroad Drawbridge crosses the Black River at Mile 1.0 near La Crosse, Wisconsin. Its drawspan provides 15 feet of vertical clearance in the closed-to-navigation position and 49 feet of vertical clearance in the open-to-navigation position.

The bridge currently operates under 33 CFR 117.1081; opening on demand following a two-hour advance notification. This bridge has operated under the current regulation since 2002.

As explained and proposed in the NPRM, in order to reduce wait time for requested drawbridge openings while also reducing operating costs, Canadian Pacific requested this drawbridge be

operated where vessels contact a remote drawbridge operator via VHF–FM Channel 16 or telephone (507) 895–6087. Mariners establish radio or telephone communications and request an opening. The remote operator ensures no trains are in the block and then opens the drawspan. Once opened to navigation it remains raised until the remote operator verifies safe vessel passage. This verification is conducted by radio or telephone confirmation with the passing vessel, video monitoring, and boat detection equipment.

The temporary deviation period will start 12:01 a.m. on June 15, 2012 through 11:59 p.m. on July 15, 2012. During this time the drawspan will be opened on demand by a remote operator.

This temporary deviation has been coordinated with waterway users. No objections were received. There are no alternate routes for vessels transiting this section of the Black River.

In accordance with 33 CFR 117.35(e), the drawbridge must return to its regular operating schedule immediately at the end of the designated time period. This temporary deviation from the operating regulations is authorized under 33 CFR 117.35.

Dated: May 7, 2012.

Eric A. Washburn,

Bridge Administrator, Western Rivers.

[FR Doc. 2012–12229 Filed 5–18–12; 8:45 am]

BILLING CODE 9110–04–P

DEPARTMENT OF HOMELAND SECURITY

Coast Guard

33 CFR Part 117

[Docket No. USCG–2012–0412]

Drawbridge Operation Regulation; Willamette River, Portland, OR

AGENCY: Coast Guard, DHS.

ACTION: Notice of temporary deviation from regulations.

SUMMARY: The Coast Guard has issued a temporary deviation from the operating schedule that governs the upper deck of the Steel Bridge across the Willamette River, mile 12.1, at Portland, OR. This deviation is necessary to accommodate the efficient movement of light rail and roadway traffic associated with the Rose Parade in Portland, Oregon. This deviation allows the upper deck of the Steel Bridge to remain in the closed position to facilitate efficient movement of event patrons.

DATES: This deviation is effective from 7 a.m. on June 9, 2012 through 1 p.m. June 9, 2012.

ADDRESSES: Documents mentioned in this preamble as being available in the docket are part of docket USCG–2012–0412 and are available online by going to *http://www.regulations.gov,* inserting USCG–2012–0412 in the ''Keyword'' box and then clicking ''Search''. They are also available for inspection or copying at the Docket Management Facility (M–30), U.S. Department of Transportation, West Building Ground Floor, Room W12–140, 1200 New Jersey Avenue SE., Washington, DC 20590, between 9 a.m. and 5 p.m., Monday through Friday, except Federal holidays.

FOR FURTHER INFORMATION CONTACT: If you have questions on this rule, call or email the Bridge Administrator, Coast Guard Thirteenth District; telephone 206–220–7282 email *randall.d.overton@uscg.mil.* If you have questions on viewing the docket, call Renee V. Wright, Program Manager, Docket Operations, telephone 202–366–9826.

SUPPLEMENTARY INFORMATION: Trimet of Portland and the Oregon Department of Transportation have requested that the upper deck of the Steel Bridge remain closed to vessel traffic to facilitate safe efficient movement of light rail and roadway traffic associated with the Rose Parade. The Steel Bridge crosses the Willamette River at mile 12.1 and is a double-deck lift bridge with a lower lift deck and an upper lift deck which operate independent of each other. When both decks are in the down position the bridge provides 26 feet of vertical clearance above Columbia River Datum 0.0. When the lower deck is in the up position the bridge provides 71 feet of vertical clearance above Columbia River Datum 0.0. This deviation does not affect the operating schedule of the lower deck which opens on signal. Vessels which do not require an opening of the upper deck of the bridge may continue to transit beneath the bridge and, if needed, may obtain an opening of the lower deck of the bridge for passage during this closure period of the upper deck. Under normal conditions the upper deck of the Steel Bridge operates in accordance with 33 CFR 117.897(c)(3)(ii) which states that from 8 a.m. to 5 p.m. Monday through Friday one hour advance notice shall be given for draw openings and at all other times two hours advance notice shall be given to obtain an opening. This deviation period is from 7 a.m. on June 9, 2012 through 1 p.m. June 9, 2012. The deviation allows the upper deck of the Steel Bridge across the Willamette River, mile 12.1, to remain in the closed position and need not open for maritime traffic from 7 a.m. through 1 p.m. on June 9, 2012. The bridge shall operate in accordance to 33 CFR 117.897 at all other times. Waterway usage on this stretch of the Willamette River includes vessels ranging from commercial tug and barge to small pleasure craft. Mariners will be notified and kept informed of the bridge's operational status via the Coast Guard Notice to Mariners publication and Broadcast Notice to Mariners as appropriate. The lift span will be required to open, if needed, for public vessels of the United States and Canada and for vessels engaged in emergency response operations during this closure period.

In accordance with 33 CFR 117.35(e), the drawbridge must return to its regular operating schedule immediately at the end of the designated time period. This deviation from the operating regulations is authorized under 33 CFR 117.35.

Dated: May 8, 2012.

Randall D. Overton,

Bridge Administrator.

[FR Doc. 2012–12232 Filed 5–18–12; 8:45 am]

BILLING CODE 9110–04–P

DEPARTMENT OF HOMELAND SECURITY

Coast Guard

33 CFR Part 117

[Docket No. USCG–2012–0406]

Drawbridge Operation Regulation; Willamette River, Portland, OR

AGENCY: Coast Guard, DHS.

ACTION: Notice of temporary deviation from regulations.

SUMMARY: The Coast Guard has issued a temporary deviation from the operating schedule that governs the upper deck of the Steel Bridge across the Willamette River, mile 12.1, at Portland, OR. This deviation is necessary to accommodate the efficient movement of light rail and roadway traffic associated with the Starlight Parade in Portland, Oregon. This deviation allows the upper deck of the Steel Bridge to remain in the closed position to facilitate efficient movement of event patrons.

DATES: This deviation is effective from 7 p.m. on June 2, 2012 through 11:30 p.m. June 2, 2012.

ADDRESSES: Documents mentioned in this preamble as being available in the docket are part of docket USCG–2012–0406 and are available online by going to *http://www.regulations.gov,* inserting

USCG–2012–0406 in the ''Keyword'' box and then clicking ''Search''. They are also available for inspection or copying at the Docket Management Facility (M–30), U.S. Department of Transportation, West Building Ground Floor, Room W12–140, 1200 New Jersey Avenue SE., Washington, DC 20590, between 9 a.m. and 5 p.m., Monday through Friday, except Federal holidays.

FOR FURTHER INFORMATION CONTACT: If you have questions on this rule, call or email the Bridge Administrator, Coast Guard Thirteenth District; telephone 206–220–7282 email *randall.d.overton@uscg.mil.* If you have questions on viewing the docket, call Renee V. Wright, Program Manager, Docket Operations, telephone 202–366–9826.

SUPPLEMENTARY INFORMATION: Trimet of Portland and the Oregon Department of Transportation have requested that the upper deck of the Steel Bridge remain closed to vessel traffic to facilitate safe efficient movement of light rail and roadway traffic associated with the Starlight Parade. The Steel Bridge crosses the Willamette River at mile 12.1 and is a double-deck lift bridge with a lower lift deck and an upper lift deck which operate independent of each other. When both decks are in the down position the bridge provides 26 feet of vertical clearance above Columbia River Datum 0.0. When the lower deck is in the up position the bridge provides 71 feet of vertical clearance above Columbia River Datum 0.0. This deviation does not affect the operating schedule of the lower deck which opens on signal. Vessels which do not require an opening of the upper deck of the bridge may continue to transit beneath the bridge and, if needed, may obtain an opening of the lower deck of the bridge for passage during this closure period of the upper deck. Under normal conditions the upper deck of the Steel Bridge operates in accordance with 33 CFR 117.897(c)(3)(ii) which states that from 8 a.m. to 5 p.m. Monday through Friday one hour advance notice shall be given for draw openings and at all other times two hours advance notice shall be given to obtain an opening. This deviation period is from 7 p.m. on June 2, 2012 through 11:30 p.m. June 2, 2012. The deviation allows the upper deck of the Steel Bridge across the Willamette River, mile 12.1, to remain in the closed position and need not open for maritime traffic from 7 p.m. through 11:30 p.m. on June 2, 2012. The bridge shall operate in accordance with 33 CFR 117.897 at all other times. Waterway usage on this stretch of the Willamette River includes vessels ranging from commercial tug and barge to small pleasure craft. Mariners will be notified and kept informed of the bridge's operational status via the Coast Guard Notice to Mariners publication and Broadcast Notice to Mariners as appropriate. The lift span will be required to open, if needed, for public vessels of the United States and Canada and for vessels engaged in emergency response operations during this closure period.

In accordance with 33 CFR 117.35(e), the drawbridge must return to its regular operating schedule immediately at the end of the designated time period. This deviation from the operating regulations is authorized under 33 CFR 117.35.

Dated: May 7, 2012.

Randall D. Overton,

Bridge Administrator.

[FR Doc. 2012–12237 Filed 5–18–12; 8:45 am]

BILLING CODE 9110–04–P

DEPARTMENT OF HOMELAND SECURITY

Coast Guard

33 CFR Part 165

[Docket No. USCG–2012–0380]

Safety Zones; Annual Fireworks Events in the Captain of the Port Detroit Zone

AGENCY: Coast Guard, DHS.

ACTION: Notice of enforcement of regulation.

SUMMARY: The Coast Guard will enforce the safety zones for annual fireworks events in the Captain of the Port Detroit zone from 9:45 p.m. on May 25, 2012 through 11:15 p.m. on September 2, 2012. This action is necessary and intended to ensure safety of life on the navigable waters immediately prior to, during, and immediately after fireworks events. During the aforementioned period, the Coast Guard will enforce restrictions upon, and control movement of, vessels in a specified area immediately prior to, during, and immediately after fireworks events. During the enforcement period, no person or vessel may enter the safety zone without permission of the Captain of the Port.

DATES: The regulations in 33 CFR 165.941 will be enforced at various times between 9:45 p.m. on May 25, 2012 through 11:15 p.m. on September 2, 2012.

FOR FURTHER INFORMATION CONTACT: If you have questions on this notice, call or email Ensign Benjamin Nessia, Waterways Branch Chief, Marine Safety Unit Toledo, 420 Madison Ave., Suite 700, Toledo, OH 43604; telephone (419) 418–6040; email *Benjamin.B.Nessia@uscg.mil.*

SUPPLEMENTARY INFORMATION: The Coast Guard will enforce the safety zones listed in 33 CFR 165.941, Safety Zones; Annual Fireworks Events in the Captain of the Port Detroit Zone, at the following times for the following events:

(1) *Put-In-Bay Fourth of July Fireworks, Put-In-Bay, OH.* The safety zone listed in 33 CFR 165.941(a)(6) will be enforced between from 9:30 p.m. until 11:00 p.m. on July 4, 2012. In case of inclement weather on July 4, 2012, this safety zone will be enforced from 9:30 p.m. until 11:00 p.m. on July 5, 2012.

(2) *Toledo Country Club Memorial Celebration and Fireworks, Toledo, OH.* The safety zone listed in 33 CFR 165.941(a)(16) will be enforced from 9:45 p.m. until 10:30 p.m. on May 25, 2012.

(3) *Luna Pier Fireworks Show, Luna Pier, MI.* The safety zone listed in 33 CFR 165.941(a)(17) will be enforced from 9:30 p.m. to 10:30 p.m. on July 7, 2012.

(4) *Toledo Country Club 4th of July Fireworks, Toledo, OH.* The safety zone listed in 33 CFR 165.941(a)(18) will be enforced from 9:45 p.m. to 10:30 p.m. on June 29, 2012.

(5) *Perrysburg/Maumee 4th of July Fireworks, Perrysburg, OH.* The safety zone listed in 33 CFR 165.941(a)(20) will be enforced from 10:00 p.m. to 10:30 p.m. on July 3, 2012.

(6) *Lakeside July 4th Fireworks, Lakeside, OH.* The safety zone listed in 33 CFR 165.941(a)(21) will be enforced from 9:30 p.m. to 11:30 p.m. on July 4, 2012.

(7) *Catawba Island Club Fireworks, Catawba Island, OH.* The safety zone listed in 33 CFR 165.941(a)(22) will be enforced from 9:15 p.m. to 9:45 p.m. on July 3, 2012.

(8) *Red, White and Blues Bang Fireworks, Huron, OH.* The safety zone listed in 33 CFR 165.941(a)(23) will be enforced from 10:00 p.m. to 11:00 p.m. on July 7, 2012.

(9) *Huron Riverfest Fireworks, Huron, OH.* The safety zone listed in 33 CFR 165.941(a)(24) will be enforced from 10:00 p.m. to 11:00 p.m. on July 13, 2012.

(10) *Lakeside Labor Day Fireworks, Lakeside OH.* The safety zone listed in 33 CFR 165.941(a)(28) will be enforced from 9:15 p.m. to 11:15 p.m. on September 2, 2012.

(11) *Catawba Island Club Fireworks, Catawba Island, OH.* The safety zone

listed in 33 CFR 165.941(a)(29) will be enforced from 9:15 p.m. to 9:45 p.m. on September 2, 2012.

(12) *Red, White, Kaboom Lights Up The Night Fireworks, Toledo, OH.* The safety zone listed in 33 CFR 165.941(a)(55) will be enforced from 10:00 p.m. to 10:30 p.m. on July 4, 2012.

Under the provisions of 33 CFR 165.23, entry into, transiting, or anchoring within these safety zones during an enforcement period is prohibited unless authorized by the Captain of the Port Detroit or his designated representative. Vessels that wish to transit through the safety zones may request permission from the Captain of the Port Detroit. Requests must be made in advance and approved by the Captain of Port before transits will be authorized. Approvals will be granted on a case by case basis. The Captain of the Port may be contacted via U.S. Coast Guard Sector Detroit on channel 16, VHF–FM. The Coast Guard will give notice to the public via a Broadcast to Mariners that the regulation is in effect.

This notice is issued under authority of 33 CFR 165.23 and 5 U.S.C. 552(a). If the Captain of the Port determines that the enforcement of these safety zones need not occur as stated in this notice, he or she might suspend such enforcement and notify the public of the suspension via a Broadcast Notice to Mariners.

Dated: May 7, 2012.

J.E. Ogden,

Captain, U.S. Coast Guard, Captain of the Port Detroit.

[FR Doc. 2012–12256 Filed 5–18–12; 8:45 am]

BILLING CODE 9110–04–P

DEPARTMENT OF HOMELAND SECURITY

Coast Guard

33 CFR Part 165

[Docket No. USCG–2012–0007]

RIN 1625–AA00

Safety Zone; International Special Operations Forces Week Capability Exercise, Seddon Channel, Tampa, FL

AGENCY: Coast Guard, DHS.

ACTION: Temporary final rule.

SUMMARY: The Coast Guard is establishing a temporary safety zone on the waters of Seddon Channel in the vicinity of the Tampa Convention Center in Tampa, Florida during the International Special Operations Forces Week Capability Exercise. The exercise is scheduled to take place on Tuesday, May 22, 2012 and Wednesday, May 23, 2012. The safety zone is necessary to protect the public from the hazards associated with airborne and waterborne activities occurring during the exercise. Persons and vessels are prohibited from entering, transiting through, anchoring in, or remaining within the safety zone unless authorized by the Captain of the Port St. Petersburg or a designated representative.

DATES: This rule is effective from 12:30 p.m. on Tuesday, May 22, 2012 until 2:30 p.m. on Wednesday, May 23, 2012.

ADDRESSES: Documents indicated in this preamble as being available in the docket are part of docket USCG–2012–0007 and are available online by going to *http://www.regulations.gov,* inserting USCG–2012–0007 in the ''Keyword'' box, and then clicking ''Search.'' They are also available for inspection or copying at the Docket Management Facility (M–30), U.S. Department of Transportation, West Building Ground Floor, Room W12–140, 1200 New Jersey Avenue SE., Washington, DC 20590, between 9 a.m. and 5 p.m., Monday through Friday, except Federal holidays.

FOR FURTHER INFORMATION CONTACT: If you have questions on this temporary final rule, call or email Marine Science Technician Second Class Chad R. Griffiths, Sector St. Petersburg Prevention Department, Coast Guard; telephone (813) 228–2191, email *D07-SMB-Tampa-WWM@uscg.mil.* If you have questions on viewing the docket, call Renee V. Wright, Program Manager, Docket Operations, telephone (202) 366–9826.

SUPPLEMENTARY INFORMATION:

Regulatory Information

The Coast Guard is issuing this temporary final rule without prior notice and opportunity to comment pursuant to authority under section 4(a) of the Administrative Procedure Act (APA) (5 U.S.C. 553(b)). This provision authorizes an agency to issue a rule without prior notice and opportunity to comment when the agency for good cause finds that those procedures are ''impracticable, unnecessary, or contrary to the public interest.'' Under 5 U.S.C. 553(b)(B), the Coast Guard finds that good cause exists for not publishing a notice of proposed rulemaking (NPRM) with respect to this rule because the Coast Guard did not receive information regarding the exercise until April 11, 2012. As a result, the Coast Guard did not have sufficient time to publish an NPRM and to receive public comments prior to the exercise. Any delay in the effective date of this rule would be contrary to the public interest because immediate action is needed to minimize potential danger to the public during the exercise.

For the same reason discussed above, under 5 U.S.C. 553(d)(3) the Coast Guard finds that good cause exists for making this rule effective less than 30 days after publication in the **Federal Register**.

Basis and Purpose

The legal basis for the rule is the Coast Guard's authority to establish regulated navigation areas and other limited access areas: 33 U.S.C. 1231; 46 U.S.C. Chapter 701, 3306, 3703; 50 U.S.C. 191, 195; 33 CFR 1.05–1, 6.04–1, 6.04–6, 160.5; Pub. L. 107–295, 116 Stat. 2064; Department of Homeland Security Delegation No. 0170.1.

The purpose of the rule is to protect the public from the hazards associated with the airborne and waterborne activities during the exercise.

Discussion of Rule

On Tuesday, May 22, 2012 and Wednesday, May 23, 2012, the International Special Operations Forces Week Capability Exercise is scheduled to take place on the waters of Seddon Channel, in the vicinity of the Tampa Convention Center in Tampa, Florida. The exercise will consist of multiple airborne and waterborne activities including: Persons fast-roping and jumping out of helicopters, high-speed boat pursuits, amphibious vehicles operations, and blank ammunition use. The exercise is scheduled to take place from 1 p.m. until 3 p.m. on May 22, 2012, and from 1 p.m. until 2 p.m. on May 23, 2012.

The temporary safety zone encompasses certain waters of Seddon Channel in the vicinity of the Tampa Convention Center in Tampa, Florida. The safety zone will be enforced from 12:30 p.m. until 3:30 p.m. on May 22, 2012, and from 12:30 p.m. until 2:30 p.m. on May 23, 2012. Enforcement of the safety zone will begin 30 minutes prior to the scheduled commencement of the exercise each day at approximately 12:30 p.m., and end 30 minutes after the scheduled completion of the exercise at approximately 3:30 p.m. on May 22, 2012 and 2:30 p.m. on May 23, 2012 to ensure the safety zone is clear of persons and vessels.

Persons and vessels are prohibited from entering, transiting through, anchoring in, or remaining within the safety zone unless authorized by the Captain of the Port St. Petersburg or a designated representative. Persons and vessels desiring to enter, transit through, anchor in, or remain within the safety

zone may contact the Captain of the Port St. Petersburg by telephone at (727) 824–7524, or a designated representative via VHF radio on channel 16, to request authorization. If authorization to enter, transit through, anchor in, or remain within the safety zone is granted by the Captain of the Port St. Petersburg or a designated representative, all persons and vessels receiving such authorization must comply with the instructions of the Captain of the Port St. Petersburg or a designated representative. The Coast Guard will provide notice of the safety zone by Local Notice to Mariners, Broadcast Notice to Mariners, and on-scene designated representatives.

Regulatory Analyses

We developed this rule after considering numerous statutes and executive orders related to rulemaking. Below we summarize our analyses based on 13 of these statutes or executive orders.

Regulatory Planning and Review

Executive Orders 13563, Improving Regulation and Regulatory Review, and 12866, Regulatory Planning and Review, direct agencies to assess the costs and benefits of available regulatory alternatives and, if regulation is necessary, to select regulatory approaches that maximize net benefits (including potential economic, environmental, public health and safety effects, distributive impacts, and equity). Executive Order 13563 emphasizes the importance of quantifying both costs and benefits, of reducing costs, of harmonizing rules, and of promoting flexibility. This rule has not been designated a significant regulatory action under section 3(f) of Executive Order 12866. Accordingly, the Office of Management and Budget has not reviewed this regulation under Executive Order 12866.

The economic impact of this rule is not significant for the following reasons: (1) The safety zone will be enforced for only five hours; (2) vessel traffic in the area will be minimal during the enforcement periods; (3) although persons and vessels will not be able to enter, transit through, anchor in, or remain within the safety zone without authorization from the Captain of the Port St. Petersburg or a designated representative, they may operate in the surrounding area during the enforcement periods; (4) persons and vessels may still enter, transit through, anchor in, or remain within the safety zone if authorized by the Captain of the Port St. Petersburg or a designated representative; and (5) the Coast Guard will provide advance notification of the safety zone to the local maritime community by Local Notice to Mariners and Broadcast Notice to Mariners.

Small Entities

Under the Regulatory Flexibility Act (5 U.S.C. 601–612), we have considered whether this rule would have a significant economic impact on a substantial number of small entities. The term ''small entities'' comprises small businesses, not-for-profit organizations that are independently owned and operated and are not dominant in their fields, and governmental jurisdictions with populations of less than 50,000.

The Coast Guard certifies under 5 U.S.C. 605(b) that this rule will not have a significant economic impact on a substantial number of small entities. This rule may affect the following entities, some of which may be small entities: The owners or operators of vessels intending to enter, transit through, anchor in, or remain within that portion of Seddon Channel in Tampa, Florida, encompassed within the safety zone from 12:30 p.m. until 3:30 p.m. on May 22, 2012, and from 12:30 p.m. until 2:30 p.m. on May 23, 2012. For the reasons discussed in the Regulatory Planning and Review section above, this rule will not have a significant economic impact on a substantial number of small entities.

Assistance for Small Entities

Under section 213(a) of the Small Business Regulatory Enforcement Fairness Act of 1996 (Pub. L. 104–121), we offer to assist small entities in understanding the rule so that they can better evaluate its effects on them and participate in the rulemaking process.

Small businesses may send comments on the actions of Federal employees who enforce, or otherwise determine compliance with, Federal regulations to the Small Business and Agriculture Regulatory Enforcement Ombudsman and the Regional Small Business Regulatory Fairness Boards. The Ombudsman evaluates these actions annually and rates each agency's responsiveness to small business. If you wish to comment on actions by employees of the Coast Guard, call 1–888–REG–FAIR (1–888–734–3247). The Coast Guard will not retaliate against small entities that question or complain about this rule or any policy or action of the Coast Guard.

Collection of Information

This rule calls for no new collection of information under the Paperwork Reduction Act of 1995 (44 U.S.C. 3501–3520).

Federalism

A rule has implications for federalism under Executive Order 13132, Federalism, if it has a substantial direct effect on State or local governments and would either preempt State law or impose a substantial direct cost of compliance on them. We have analyzed this rule under that Order and have determined that it does not have implications for federalism.

Unfunded Mandates Reform Act

The Unfunded Mandates Reform Act of 1995 (2 U.S.C. 1531–1538) requires Federal agencies to assess the effects of their discretionary regulatory actions. In particular, the Act addresses actions that may result in the expenditure by a State, local, or Tribal government, in the aggregate, or by the private sector of $100,000,000 or more in any one year. Though this rule will not result in such an expenditure, we do discuss the effects of this rule elsewhere in this preamble.

Taking of Private Property

This rule will not effect a taking of private property or otherwise have taking implications under Executive Order 12630, Governmental Actions and Interference with Constitutionally Protected Property Rights.

Civil Justice Reform

This rule meets applicable standards in sections 3(a) and 3(b)(2) of Executive Order 12988, Civil Justice Reform, to minimize litigation, eliminate ambiguity, and reduce burden.

Protection of Children

We have analyzed this rule under Executive Order 13045, Protection of Children from Environmental Health Risks and Safety Risks. This rule is not an economically significant rule and does not create an environmental risk to health or risk to safety that may disproportionately affect children.

Indian Tribal Governments

This rule does not have Tribal implications under Executive Order 13175, Consultation and Coordination with Indian Tribal Governments, because it does not have a substantial direct effect on one or more Indian Tribes, on the relationship between the Federal Government and Indian Tribes, or on the distribution of power and responsibilities between the Federal Government and Indian Tribes.

Energy Effects

We have analyzed this rule under Executive Order 13211, Actions Concerning Regulations That Significantly Affect Energy Supply, Distribution, or Use. We have determined that it is not a ''significant energy action'' under that order because it is not a ''significant regulatory action'' under Executive Order 12866 and is not likely to have a significant adverse effect on the supply, distribution, or use of energy. The Administrator of the Office of Information and Regulatory Affairs has not designated it as a significant energy action. Therefore, it does not require a Statement of Energy Effects under Executive Order 13211.

Technical Standards

The National Technology Transfer and Advancement Act (NTTAA) (15 U.S.C. 272 note) directs agencies to use voluntary consensus standards in their regulatory activities unless the agency provides Congress, through the Office of Management and Budget, with an explanation of why using these standards would be inconsistent with applicable law or otherwise impractical. Voluntary consensus standards are technical standards (e.g., specifications of materials, performance, design, or operation; test methods; sampling procedures; and related management systems practices) that are developed or adopted by voluntary consensus standards bodies.

This rule does not use technical standards. Therefore, we did not consider the use of voluntary consensus standards.

Environment

We have analyzed this rule under Department of Homeland Security Management Directive 023–01 and Commandant Instruction M16475.lD, which guide the Coast Guard in complying with the National Environmental Policy Act of 1969 (NEPA) (42 U.S.C. 4321–4370f), and have concluded this action is one of a category of actions that do not individually or cumulatively have a significant effect on the human environment. This rule is categorically excluded, under figure 2–1, paragraph (34)(g), of the Instruction. This rule involves establishing a temporary safety zone that will be enforced for only five hours. An environmental analysis checklist and a categorical exclusion determination are available in the docket where indicated under **ADDRESSES**.

List of Subjects in 33 CFR Part 165

Harbors, Marine safety, Navigation (water), Reporting and recordkeeping requirements, Security measures, Waterways.

For the reasons discussed in the preamble, the Coast Guard amends 33 CFR part 165 as follows:

PART 165—REGULATED NAVIGATION AREAS AND LIMITED ACCESS AREAS

■ 1. The authority citation for part 165 continues to read as follows:

Authority: 33 U.S.C. 1231; 46 U.S.C. Chapter 701, 3306, 3703; 50 U.S.C. 191, 195; 33 CFR 1.05–1, 6.04–1, 6.04–6, 160.5; Pub. L. 107–295, 116 Stat. 2064; Department of Homeland Security Delegation No. 0170.1.

■ 2. Add a temporary § 165.T07–0007 to read as follows:

§ 165.T07–0007 Safety Zone; International Special Operations Forces Week Capability Exercise, Seddon Channel, Tampa, FL.

(a) *Regulated Area.* The following regulated area is a safety zone. All waters of Seddon Channel within a 300 yard radius of position 27°56′21″ N, 82°27′23″ W. All coordinates are North American Datum 1983.

(b) *Definition.* The term ''*designated representative*'' means Coast Guard Patrol Commanders, including Coast Guard coxswains, petty officers, and other officers operating Coast Guard vessels, and Federal, state, and local officers designated by or assisting the Captain of the Port St. Petersburg in the enforcement of the regulated area.

(c) *Regulations.*

(1) All persons and vessels are prohibited from entering, transiting through, anchoring in, or remaining within the regulated area unless authorized by the Captain of the Port St. Petersburg or a designated representative.

(2) Persons and vessels desiring to enter, transit through, anchor in, or remain within the regulated area may contact the Captain of the Port St. Petersburg by telephone at (727) 824–7524, or a designated representative via VHF radio on channel 16, to request authorization. If authorization to enter, transit through, anchor in, or remain within the regulated area is granted by the Captain of the Port St. Petersburg or a designated representative, all persons and vessels receiving such authorization must comply with the instructions of the Captain of the Port St. Petersburg or a designated representative.

(3) The Coast Guard will provide notice of the regulated area by Local Notice to Mariners, Broadcast Notice to Mariners, and on-scene designated representatives.

(d) *Effective Date.* This rule will be enforced from 12:30 p.m. until 3:30 p.m. on May 22, 2012, and from 12:30 p.m. until 2:30 p.m. on May 23, 2012.

Dated: May 2, 2012.

S.L. Dickinson,

Captain, U.S. Coast Guard, Captain of the Port St. Petersburg.

[FR Doc. 2012–12239 Filed 5–18–12; 8:45 am]

BILLING CODE 9110–04–P

DEPARTMENT OF HOMELAND SECURITY

Coast Guard

33 CFR Part 165

[Docket No. USCG–2012–0388]

RIN 1625–AA00

Safety Zone; Marysville Days Fireworks, St. Clair River, Marysville, MI

AGENCY: Coast Guard, DHS.

ACTION: Temporary final rule.

SUMMARY: The Coast Guard is establishing a temporary safety zone on the St. Clair River, Marysville, Michigan. This zone is intended to restrict vessels from a portion of the St. Clair River during the preparation for and display of the Marysville Days Fireworks on June 29, 2012.

DATES: This rule is effective from 10:00 p.m. through 11:15 p.m. on June 29, 2012.

ADDRESSES: Documents indicated in this preamble as being available in the docket are part of docket USCG–2012–0388 and are available online by going to *http://www.regulations.gov,* inserting USCG–2012–0388 in the ''Keyword'' box, and then clicking ''Search.'' They are also available for inspection or copying at the Docket Management Facility (M–30), U.S. Department of Transportation, West Building Ground Floor, Room W12–140, 1200 New Jersey Avenue SE., Washington, DC 20590, between 9 a.m. and 5 p.m., Monday through Friday, except Federal holidays.

FOR FURTHER INFORMATION CONTACT: If you have questions on this temporary rule, call or email LT Adrian Palomeque, Prevention Department, Sector Detroit, Coast Guard; telephone (313) 568–9508, email *Adrian.F.Palomeque@uscg.mil.* If you have questions on viewing or submitting material to the docket, call Renee V. Wright, Program Manager, Docket Operations, telephone 202–366–9826.

SUPPLEMENTARY INFORMATION:

Regulatory Information

The Coast Guard is issuing this temporary final rule without prior notice and opportunity to comment pursuant to authority under section 4(a) of the Administrative Procedure Act (APA) (5 U.S.C. 553(b)). This provision authorizes an agency to issue a rule without prior notice and opportunity to comment when the agency for good cause finds that those procedures are ''impracticable, unnecessary, or contrary to the public interest.'' Under 5 U.S.C. 553(b)(B), the Coast Guard finds that good cause exists for not publishing a notice of proposed rulemaking (NPRM) with respect to this rule because waiting for a notice and comment period to run would be impracticable. The final details for this year's event were not received by the Coast Guard with sufficient time to run a comment period before the start of this year's event. Thus, delaying the effectiveness of this rule to await the running of a comment period would inhibit the Coast Guard's ability to protect the public from the hazards associated with maritime fireworks displays.

Under 5 U.S.C. 553(d)(3), the Coast Guard finds that good cause exists for making this rule effective less than 30 days after publication in the **Federal Register**. Delaying the effective date of this rule would be impracticable for the same reasons discussed in the preceding paragraph.

Background and Purpose

On June 29, 2012, fireworks will be launched from a point on land near the Marysville Municipal Park, adjacent to the St. Clair River, to commemorate Marysville Day. The fireworks display will occur between 10:00 p.m. and 11:15 p.m., June 29, 2012. The Captain of the Port Detroit has determined that these fireworks will pose certain hazards to the boating public. Such hazards include obstructions to the waterway that may cause marine casualties, the explosive danger of fireworks, and debris falling into the water that may cause death, serious bodily harm, or property damage. Establishing a safety zone to control vessel movement around the location of the launch platform will help ensure the safety of persons and property in the vicinity of this event and help minimize the associated risks.

Discussion of Rule

For the reasons discussed above, the Captain of the Port Detroit has determined that a temporary safety zone is necessary to ensure the safety of spectators and vessels during the setup, loading, and launching of the Marysville Days Fireworks Display. This safety zone is effective and will be enforced from 10:00 p.m. through 11:15 p.m. on June 29, 2012. The temporary safety zone will encompass all waters on St. Clair River within a 600 foot radius of the fireworks launch site located on land at position 42°54′25″ N, 082°27′58″ W. All geographic coordinates are North American Datum of 1983 (NAD 83).

All persons and vessels shall comply with the instructions of the Coast Guard Captain of the Port or the designated on scene representative. Entry into, transiting, or anchoring within the safety zone is prohibited unless authorized by the Captain of the Port Detroit or his designated on scene representative. The Captain of the Port or his designated on scene representative may be contacted via VHF Channel 16.

Regulatory Analyses

We developed this rule after considering numerous statutes and executive orders related to rulemaking. Below we summarize our analyses based on 13 of these statutes or executive orders.

Regulatory Planning and Review

This rule is not a significant regulatory action under section 3(f) of Executive Order 12866, Regulatory Planning and Review, and does not require an assessment of potential costs and benefits under section 6(a)(3) of that Order. The Office of Management and Budget has not reviewed it under that Order. It is not ''significant'' under the regulatory policies and procedures of the Department of Homeland Security (DHS). We conclude that this rule is not a significant regulatory action because we anticipate that it will have minimal impact on the economy, will not interfere with other agencies, will not adversely alter the budget of any grant or loan recipients, and will not raise any novel legal or policy issues. The safety zone around the launch platform will be relatively small and exist for only a minimal time. Thus, restrictions on vessel movement within any particular area of the St. Clair River are expected to be minimal. Under certain conditions, moreover, vessels may still transit through the safety zone when permitted by the Captain of the Port.

Small Entities

Under the Regulatory Flexibility Act (5 U.S.C. 601–612), we have considered whether this rule would have a significant economic impact on a substantial number of small entities. The term ''small entities'' comprises small businesses, not-for-profit organizations that are independently owned and operated and are not dominant in their fields, and governmental jurisdictions with populations of less than 50,000.

The Coast Guard certifies under 5 U.S.C. 605(b) that this rule will not have a significant economic impact on a substantial number of small entities.

This rule will affect the following entities, some of which may be small entities: The owners and operators of vessels intending to transit or anchor in this portion of St. Clair River between 10:00 p.m. through 11:15 p.m. on June 29, 2011.

This safety zone will not have a significant economic impact on a substantial number of small entities for the same reasons discussed in the above *Regulatory Planning and Review section.*

Assistance for Small Entities

Under section 213(a) of the Small Business Regulatory Enforcement Fairness Act of 1996 (Pub. L. 104–121), we offer to assist small entities in understanding the rule so that they can better evaluate its effects on them and participate in the rulemaking process.

Small businesses may send comments on the actions of Federal employees who enforce, or otherwise determine compliance with, Federal regulations to the Small Business and Agriculture Regulatory Enforcement Ombudsman and the Regional Small Business Regulatory Fairness Boards. The Ombudsman evaluates these actions annually and rates each agency's responsiveness to small business. If you wish to comment on actions by employees of the Coast Guard, call 1–888–REG–FAIR (1–888–734–3247). The Coast Guard will not retaliate against small entities that question or complain about this rule or any policy or action of the Coast Guard.

Collection of Information

This rule calls for no new collection of information under the Paperwork Reduction Act of 1995 (44 U.S.C. 3501–3520).

Federalism

A rule has implications for federalism under Executive Order 13132, Federalism, if it has a substantial direct effect on State or local governments and would either preempt State law or impose a substantial direct cost of compliance on them. We have analyzed this rule under that Order and have determined that it does not have implications for federalism.

Unfunded Mandates Reform Act

The Unfunded Mandates Reform Act of 1995 (2 U.S.C. 1531–1538) requires Federal agencies to assess the effects of their discretionary regulatory actions. In particular, the Act addresses actions that may result in the expenditure by a State, local, or tribal government, in the aggregate, or by the private sector of $100,000,000 (adjusted for inflation) or more in any one year. Though this rule will not result in such an expenditure, we do discuss the effects of this rule elsewhere in this preamble.

Taking of Private Property

This rule will not cause a taking of private property or otherwise have taking implications under Executive Order 12630, Governmental Actions and Interference with Constitutionally Protected Property Rights.

Civil Justice Reform

This rule meets applicable standards in sections 3(a) and 3(b)(2) of Executive Order 12988, Civil Justice Reform, to minimize litigation, eliminate ambiguity, and reduce burden.

Protection of Children

We have analyzed this rule under Executive Order 13045, Protection of Children from Environmental Health Risks and Safety Risks. This rule is not an economically significant rule and does not create an environmental risk to health or risk to safety that may disproportionately affect children.

Indian Tribal Governments

This rule does not have tribal implications under Executive Order 13175, Consultation and Coordination with Indian Tribal Governments, because it does not have a substantial direct effect on one or more Indian tribes, on the relationship between the Federal Government and Indian tribes, or on the distribution of power and responsibilities between the Federal Government and Indian tribes.

Energy Effects

We have analyzed this rule under Executive Order 13211, Actions Concerning Regulations That Significantly Affect Energy Supply, Distribution, or Use. We have determined that it is not a ''significant energy action'' under that order because it is not a ''significant regulatory action'' under Executive Order 12866 and is not likely to have a significant adverse effect on the supply, distribution, or use of energy. The Administrator of the Office of Information and Regulatory Affairs has not designated it as a significant energy action. Therefore, it does not require a Statement of Energy Effects under Executive Order 13211.

Technical Standards

The National Technology Transfer and Advancement Act (NTTAA) (15 U.S.C. 272 note) directs agencies to use voluntary consensus standards in their regulatory activities unless the agency provides Congress, through the Office of Management and Budget, with an explanation of why using these standards would be inconsistent with applicable law or otherwise impractical. Voluntary consensus standards are technical standards (e.g., specifications of materials, performance, design, or operation; test methods; sampling procedures; and related management systems practices) that are developed or adopted by voluntary consensus standards bodies.

This rule does not use technical standards. Therefore, we did not consider the use of voluntary consensus standards.

Environment

We have analyzed this rule under Department of Homeland Security Management Directive 023–01 and Commandant Instruction M16475.lD, which guide the Coast Guard in complying with the National Environmental Policy Act of 1969 (NEPA) (42 U.S.C. 4321–4370f), and have concluded this action is one of a category of actions that do not individually or cumulatively have a significant effect on the human environment. This rule is categorically excluded, under figure 2–1, paragraph (34)(g) of the Instruction because it involves the establishment of a temporary safety zone. An environmental analysis checklist and a categorical exclusion determination will be available in the docket where indicated under **ADDRESSES**.

List of Subjects in 33 CFR Part 165

Harbors, Marine safety, Navigation (water), Reporting and recordkeeping requirements, Security measures, Waterways.

For the reasons discussed in the preamble, the Coast Guard amends 33 CFR Part 165 as follows:

PART 165— REGULATED NAVIGATION AREAS AND LIMITED ACCESS AREAS

■ 1. The authority citation for part 165 continues to read as follows:

Authority: 33 U.S.C. 1231; 46 U.S.C. Chapter 701, 3306, 3703; 50 U.S.C. 191, 195; 33 CFR 1.05–1, 6.04–1, 6.04–6, and 160.5; Pub. L. 107–295, 116 Stat. 2064; Department of Homeland Security Delegation No. 0170.1.

■ 2. Add § 165.T09–0388 to read as follows:

§ 165.T09–0388 Safety zone; Marysville Days Fireworks, St. Clair River, Marysville, MI.

(a) *Location.* The safety zone will encompass all U.S. waters of the St. Clair River within a 600 foot radius of the fireworks launch site located on land at position 42°54′25″ N, 082°27′58″ W. All geographic coordinates are North American Datum of 1983 (NAD 83).

(b) *Effective and Enforcement Period.* This safety zone is effective and will be enforced from 10:00 p.m. through 11:15 p.m. on June 29, 2012.

(c) *Regulations.*

(1) In accordance with the general regulations in § 165.23 of this part, entry into, transiting, or anchoring within this safety zone is prohibited unless authorized by the Captain of the Port Detroit or his designated on-scene representative.

(2) This safety zone is closed to all vessel traffic, except as may be permitted by the Captain of the Port Detroit or his designated on-scene representative.

(3) The ''on-scene representative'' of the Captain of the Port is any Coast Guard commissioned, warrant, or petty officer who has been designated by the Captain of the Port to act on his behalf. The on-scene representative of the Captain of the Port will be aboard either a Coast Guard or Coast Guard Auxiliary vessel. The Captain of the Port or his designated on scene representative may be contacted via VHF Channel 16.

(4) Vessel operators desiring to enter or operate within the safety zone shall contact the Captain of the Port Detroit or his on-scene representative to obtain permission to do so.

(5) Vessel operators given permission to enter or operate in the safety zone must comply with all directions given to them by the Captain of the Port or his on-scene representative.

Dated: May 7, 2012.

J.E. Ogden,

Captain, U.S. Coast Guard, Captain of the Port Detroit.

[FR Doc. 2012–12264 Filed 5–18–12; 8:45 am]

BILLING CODE 9110–04–P

ENVIRONMENTAL PROTECTION AGENCY

40 CFR Part 52

[EPA–R10–OAR–2011–0716; FRL–9673–7]

Approval and Promulgation of Implementation Plans; Oregon: Infrastructure Requirements for the 1997 8-Hour Ozone National Ambient Air Quality Standard

AGENCY: Environmental Protection Agency (EPA).

ACTION: Final rule.

SUMMARY: EPA is approving the State Implementation Plan (SIP) submittal from the State of Oregon to demonstrate that the SIP meets the requirements of section 110(a)(1) and (2) of the Clean Air Act (CAA) for the National Ambient Air Quality Standard (NAAQS) promulgated for ozone on July 18, 1997. EPA finds that the current Oregon SIP meets the following 110(a)(2) infrastructure elements for the 1997 8-hour ozone NAAQS: (A), (B), (C), (D)(ii), (E), (F), (G), (H), (J), (K), (L), and (M).

DATES: This action is effective on June 20, 2012.

ADDRESSES: EPA has established a docket for this action under Docket ID No. EPA–R10–OAR–2011–0716. All documents in the docket are listed on the *www.regulations.gov* Web site. Although listed in the index, some information may not be publicly available, i.e., Confidential Business Information or other information whose disclosure is restricted by statute. Certain other material, such as copyrighted material, is not placed on the Internet and will be publicly available only in hard copy form. Publicly available docket materials are available either electronically through *www.regulations.gov* or in hard copy at EPA Region 10, Office of Air, Waste and Toxics (AWT–107), 1200 Sixth Avenue, Suite 900, Seattle, WA 98101. EPA requests that you contact the person listed in the **FOR FURTHER INFORMATION CONTACT** section to schedule your inspection. The Regional Office's official hours of business are Monday through Friday, 8:30 to 4:30, excluding Federal holidays.

FOR FURTHER INFORMATION CONTACT: Kristin Hall at telephone number: (206) 553–6357, email address: *hall.kristin@epa.gov,* or the above EPA, Region 10 address.

SUPPLEMENTARY INFORMATION: Throughout this document wherever ''we'', ''us'' or ''our'' are used, we mean EPA. Information is organized as follows:

Table of Contents

I. Background
II. Scope of Action
III. Final Action
IV. Statutory and Executive Order Reviews

I. Background

On July 18, 1997, EPA promulgated a new NAAQS for ozone. EPA revised the ozone NAAQS to provide an 8-hour averaging period which replaced the previous 1-hour averaging period, and the level of the NAAQS was changed from 0.12 parts per million (ppm) to 0.08 ppm (62 FR 38856). The CAA requires SIPs meeting the requirements of sections 110(a)(1) and (2) be submitted by states within 3 years after promulgation of a new or revised standard. Sections 110(a)(1) and (2) require states to address basic SIP requirements, including emissions inventories, monitoring, and modeling to assure attainment and maintenance of the standards, so-called ''infrastructure'' requirements. To help states meet this statutory requirement for the 1997 8-hour ozone NAAQS, EPA issued guidance to address infrastructure SIP elements under section 110(a)(1) and (2).[1] In the case of the 1997 8-hour ozone NAAQS, states typically have met the basic program elements required in section 110(a)(2) through earlier SIP submissions in connection with previous ozone standards. The State of Oregon submitted a certification to EPA on September 25, 2008, certifying that Oregon's SIP meets the infrastructure obligations for the 1997 8-hour ozone NAAQS. The certification included an analysis of Oregon's SIP as it relates to each section of the infrastructure requirements with regard to the 1997 8-hour ozone NAAQS. On February 7, 2012, EPA published a notice of proposed rulemaking (NPR) for the State of Oregon (77 FR 6044) to act on the state's infrastructure SIP for the 1997 ozone NAAQS. Specifically in the NPR, EPA proposed approval of Oregon's SIP as meeting the requirements for the following 110(a)(2) infrastructure elements for the 1997 8-hour ozone NAAQS: (A), (B), (C), (D)(ii), (E), (F), (G), (H), (J), (K), (L), and (M). As discussed in the NPR, this action does not address 110(a)(2)(D)(i) and 110(a)(2)(I). The public comment period for EPA's NPR closed on March 8, 2012. EPA received no comments on the proposed action.

[1] William T. Harnett, Director, Air Quality Policy Division, Office of Air Quality Planning and Standards. ''Guidance on SIP Elements Required Under Sections 110(a)(1) and (2) for the 1997 8-hour Ozone and $PM_{2.5}$ National Ambient Air Quality Standards.'' Memorandum to EPA Air Division Directors, Regions I–X, October 2, 2007.

II. Scope of Action

Oregon has not demonstrated authority to implement and enforce the Oregon Administrative Rules within ''Indian Country'' as defined in 18 U.S.C. 1151.[2] Therefore, this SIP approval does not extend to ''Indian Country'' in Oregon. See CAA sections 110(a)(2)(A) (SIP shall include enforceable emission limits), 110(a)(2)(E)(i) (State must have adequate authority under State law to carry out SIP), and 172(c)(6) (nonattainment SIPs shall include enforceable emission limits). This is consistent with EPA's previous approval of Oregon's PSD program, in which EPA specifically disapproved the program for sources within Indian Reservations in Oregon because the State had not shown it had authority to regulate such sources. See 40 CFR 52.1987(c). It is also consistent with EPA's approval of Oregon's title V operating permits program. See 59 FR 61820, 61827 (December 2, 1994) (interim approval does not extend to Indian Country); 60 FR 50106, 50106 (September 28, 1995) (full approval does not extend to Indian Country).

III. Final Action

EPA is approving the September 25, 2008, SIP submittal from the State of Oregon to demonstrate that the SIP meets the requirements of section 110(a)(1) and (2) of the CAA for the NAAQS promulgated for ozone on July 18, 1997. EPA is approving the following section 110(a)(2) infrastructure elements for Oregon for the 1997 ozone NAAQS: (A), (B), (C), (D)(ii), (E), (F), (G), (H), (J), (K), (L), (M). EPA is taking no action on infrastructure elements (D)(i) and (I) for the 1997 ozone NAAQS. This action is being taken under section 110 of the CAA.

IV. Statutory and Executive Order Reviews

Under the Clean Air Act, the Administrator is required to approve a SIP submission that complies with the provisions of the Act and applicable Federal regulations. 42 U.S.C. 7410(k);

[2] ''Indian country'' is defined under 18 U.S.C. 1151 as: (1) All land within the limits of any Indian reservation under the jurisdiction of the United States Government, notwithstanding the issuance of any patent, and including rights-of-way running through the reservation, (2) all dependent Indian communities within the borders of the United States, whether within the original or subsequently acquired territory thereof, and whether within or without the limits of a State, and (3) all Indian allotments, the Indian titles to which have not been extinguished, including rights-of-way running through the same. Under this definition, EPA treats as reservations trust lands validly set aside for the use of a Tribe even if the trust lands have not been formally designated as a reservation.

40 CFR 52.02(a). Thus, in reviewing SIP submissions, EPA's role is to approve state choices, provided that they meet the criteria of the Clean Air Act. Accordingly, this action merely approves state law as meeting Federal requirements and does not impose additional requirements beyond those imposed by state law. For that reason, this action:

- Is not a ''significant regulatory action'' subject to review by the Office of Management and Budget under Executive Order 12866 (58 FR 51735, October 4, 1993);
- Does not impose an information collection burden under the provisions of the Paperwork Reduction Act (44 U.S.C. 3501 *et seq.*);
- Is certified as not having a significant economic impact on a substantial number of small entities under the Regulatory Flexibility Act (5 U.S.C. 601 *et seq.*);
- Does not contain any unfunded mandate or significantly or uniquely affect small governments, as described in the Unfunded Mandates Reform Act of 1995 (Pub. L. 104–4);
- Does not have Federalism implications as specified in Executive Order 13132 (64 FR 43255, August 10, 1999);
- Is not an economically significant regulatory action based on health or safety risks subject to Executive Order 13045 (62 FR 19885, April 23, 1997);
- Is not a significant regulatory action subject to Executive Order 13211 (66 FR 28355, May 22, 2001);
- Is not subject to requirements of Section 12(d) of the National Technology Transfer and Advancement Act of 1995 (15 U.S.C. 272 note) because application of those requirements would be inconsistent with the Clean Air Act; and
- Does not provide EPA with the discretionary authority to address, as appropriate, disproportionate human health or environmental effects, using practicable and legally permissible methods, under Executive Order 12898 (59 FR 7629, February 16, 1994).

In addition, this rule does not have tribal implications as specified by Executive Order 13175 (65 FR 67249, November 9, 2000), because the SIP is not approved to apply in Indian country located in the state, and EPA notes that it will not impose substantial direct costs on tribal governments or preempt tribal law.

The Congressional Review Act, 5 U.S.C. 801 *et seq.,* as added by the Small Business Regulatory Enforcement Fairness Act of 1996, generally provides that before a rule may take effect, the agency promulgating the rule must submit a rule report, which includes a copy of the rule, to each House of the Congress and to the Comptroller General of the United States. EPA will submit a report containing this action and other required information to the U.S. Senate, the U.S. House of Representatives, and the Comptroller General of the United States prior to publication of the rule in the **Federal Register.** A major rule cannot take effect until 60 days after it is published in the **Federal Register.** This action is not a ''major rule'' as defined by 5 U.S.C. 804(2).

Under section 307(b)(1) of the Clean Air Act, petitions for judicial review of this action must be filed in the United States Court of Appeals for the appropriate circuit by July 20, 2012. Filing a petition for reconsideration by the Administrator of this final rule does not affect the finality of this action for the purposes of judicial review nor does it extend the time within which a petition for judicial review may be filed, and shall not postpone the effectiveness of such rule or action. This action may not be challenged later in proceedings to enforce its requirements. (See section 307(b)(2)).

List of Subjects in 40 CFR Part 52

Environmental protection, Air pollution control, Carbon monoxide, Incorporation by reference, Intergovernmental relations, Lead, Nitrogen dioxide, Ozone, Particulate matter, and Reporting and recordkeeping requirements, Sulfur oxides, Volatile organic compounds.

Authority: 42 U.S.C. 7401 *et seq.*

Dated: May 4, 2012.

Michelle L. Pirzadeh,

Deputy Regional Administrator, Region 10.

40 CFR part 52 is amended as follows:

PART 52—[AMENDED]

■ 1. The authority citation for Part 52 continues to read as follows:

Authority: 42 U.S.C. 7401 *et seq.*

Subpart MM—Oregon

■ 2. Section 52.1991 is added to read as follows:

§ 52.1991 Section 110(a)(2) infrastructure requirements.

On September 25, 2008, Oregon Department of Environmental Quality submitted a certification to address the requirements of CAA Section 110(a)(1) and (2) for the 1997 8-hour ozone NAAQS. EPA approves the submittal as meeting the following 110(a)(2) infrastructure elements for the 1997 8-hour ozone NAAQS: (A), (B), (C), (D)(ii), (E), (F), (G), (H), (J), (K), (L), and (M).

[FR Doc. 2012–12107 Filed 5–18–12; 8:45 am]

BILLING CODE 6560–50–P

DEPARTMENT OF COMMERCE

National Oceanic and Atmospheric Administration

50 CFR Part 223

[Docket No. 120427423–2423–02]

RIN 0648–AW93

Sea Turtle Conservation; Shrimp and Summer Flounder Trawling Requirements

AGENCY: National Marine Fisheries Service (NMFS), National Oceanic and Atmospheric Administration (NOAA), Commerce.

ACTION: Final rule.

SUMMARY: This rule revises the turtle excluder device (TED) requirements to allow the use of new materials and to modify existing approved TED designs. Specifically, this rule allows using flat bar, rectangular pipe, and oval pipe as construction material in currently-approved TED grids; using a brace bar on hard TEDs; increasing the maximum mesh size on escape flaps from 1⅝ to 2 inches (4.1 to 5.1 cm); including the Boone Big Boy TED for use in the shrimp fisheries; using three large TED and Boone Wedge Cut escape openings; and using the Chauvin shrimp deflector to improve shrimp retention. This rule also adds a TED for use in the summer flounder fishery. Additionally, the rule corrects the TED regulations to rectify an oversight regarding the maximum size chain that can be used on the Parker TED escape opening flap.

DATES: The effective date of this rule is June 20, 2012.

ADDRESSES: NMFS, Southeast Regional Office, Protected Resources Division, 263 13th Ave. South, St. Petersburg, FL 33701–5505.

FOR FURTHER INFORMATION CONTACT: Michael Barnette, NMFS, Southeast Regional Office, at the address above, or at (727) 824–5312.

SUPPLEMENTARY INFORMATION:

Background

On September 2, 2010, we proposed modifying the TED requirements, and solicited public comments on allowable TED modifications and additional certified TED designs (75 FR 53925). A detailed description of the alternative construction materials and TED designs

is provided in the proposed rule and is not repeated here.

Summary of Comments Received

In response to our request for public comments, we received written comments from four commenters.

Comment 1: The Boone Wedge Cut escape opening did not pass the small turtle testing protocol when used in a bottom-opening configuration. Therefore, it should not be certified for use as a bottom-opening TED.

Response: During the June 2008 small turtle TED testing, the Boone Big Boy TED was tested in a bottom-opening configuration. Sinkey Boone installed this TED at an angle of 54 degrees, and included the Boone Wedge Cut escape opening. We used a 32-inch by 44-inch bent-bar TED installed at 53 degrees with a double cover flap as the control TED in both a top- and bottom-opening configuration to test the configuration. In a sample size of 25 turtles each, the top-opening control TED captured 0 turtles while the bottom-opening control TED captured 1 turtle. A turtle is considered captured if it fails to escape through the TED within 5 minutes.

Based on the performance of the control TED to be considered a viable alternative any candidate TED in a top-opening configuration must capture no more than 1 turtle, while a candidate TED in a bottom-opening configuration must capture no more than 3 turtles, based on the statistical protocol of the ''small turtle test'' (55 FR 41092, October 9, 1990). The test results for the bottom-opening Boone Big Boy TED at 54 degrees with the Boone Wedge Cut escape opening were 24 escapes and 1 capture with a mean escape time of 44.3 seconds. Accordingly, the bottom-opening Boone Big Boy TED passes the statistical protocol for the small turtle test.

Comment 2: The Boone Wedge Cut escape opening was not tested at the maximum proposed angle of 55 degrees in a top-opening configuration. Previous testing has shown that changes in a few degrees of TED angle at 45 degrees with a straight-bar grid can have significant effects on sea turtle mortality. The Boone Wedge Cut escape opening in the top-opening configuration should not be certified above 50 degrees until further testing is conducted. Additionally, the Boone Big Boy TED and Boone Wedge Cut escape opening should be retested using maximum allowable TED angles and should not be considered for certification unless they pass small turtle testing protocol for both top- and bottom-opening configurations.

Response: The Boone Wedge Cut escape opening was first evaluated in Panama City in June 2002. The Boone Wedge Cut escape opening consists of installing a webbing wedge in the TED extension as an alternative to removing the extension webbing for the TED escape opening. The Boone Wedge Cut escape opening modification was tested under the leatherback sea turtle model test using a 32-inch bent-bar TED and failed. The Boone Wedge Cut escape opening was not evaluated with the small turtle test at that time.

In 2003, the Boone Wedge Cut escape opening was submitted for small turtle testing as an alternate method of achieving the required minimum 71-inch escape opening. The Boone Wedge Cut escape opening was installed into a bottom-opening, straight-bar grid with 2-inch bar spacing installed at an angle of 55 degrees. As a control, we used a TED with a top-opening 32-inch by 44-inch bent-bar. In a sample size of 25 turtles, the bottom-opening control TED captured 0 turtles. Based on the performance of the control TED, a candidate TED could capture no more than 1 turtle to pass, based on the statistical protocol of the ''small turtle test'' (55 FR 41092, October 9, 1990). The Boone Wedge Cut escape opening captured 2 turtles by interactions with chafing rope near the escape opening during testing, and so failed the small turtle test.

In 2004, the Boone Wedge Cut escape opening was tested with a Boone Big Boy TED installed at 53-degrees in a top-opening configuration. The frame was wrapped with 0.25-inch polypropylene rope as chafing gear. Prior evaluations of this style TED (i.e., 2003 testing) demonstrated that straight-bar TEDs in a bottom-opening configuration with 0.50-inch rope chafing gear present a problem for turtle exclusion, as turtles can get hung up on this rope. We used a 32-inch by 44-inch bent-bar TED installed at 53 degrees with a double cover flap as the control TED. In a sample size of 25 turtles, the top-opening control TED captured 2 turtles. Based on the performance of the control TED, a candidate TED must capture no more than 4 turtles to pass the ''small turtle test'' (55 FR 41092, October 9, 1990). The Boone Wedge Cut escape opening and frame wrapped with 0.25-inch polypropylene rope captured 0 turtles, and therefore passes the statistical protocol for the small turtle test.

In summary, the Boone Wedge Cut escape opening passed the small turtle testing protocol at 53 degrees in a top-opening configuration and at 54 degrees in a bottom-opening configuration. Previous testing and rulemaking established 55 degrees as the maximum allowable TED installation angle, as the likelihood of turtle entrapment does begin to increase greatly at angles steeper than that threshold. The testing of the Boone Wedge Cut escape opening and frame wrapped with 0.25-inch polypropylene rope demonstrates that it may be approved in both top- and bottom-opening configurations at TED angles up to the maximum allowable angle for hard TEDs.

Comment 3: The original Parker TED design did not pass the small turtle testing protocol due to serious design flaws; sea turtles were entangled and captured in the large mesh ramp designed to deflect turtles to the escape opening. The large mesh ramp may potentially entangle and drown turtles, particularly when the net has been stretched from daily use. All certification testing was conducted with new nets that were not in daily use. The Parker TED should be re-evaluated with the small turtle testing protocol, remote cameras, and nets that have been well-used by fishermen.

Response: Soft TEDs have been evaluated using the small turtle testing protocol since 1988. After many trials throughout the years, we developed a successful TED, called the ''Parker'' TED, which used a 22-mesh panel installed with 8-inch mesh in the body and 4-inch mesh in the wings, with the 4-inch mesh extending all the way to the apex (escape opening). During small turtle testing protocol testing in 1997, this Parker TED design worked well and did not exhibit any pocketing that would allow a turtle to become trapped. In a sample size of 25 turtles, this Parker TED design captured 0 turtles.

Since that testing, we have learned much about the proper technique of installing a soft panel in a trawl to prevent small turtles from becoming trapped. Extensive testing has demonstrated that the correct taper and correct mesh size are essential components for an effective soft TED. As with hard TEDs, the soft TED must be maintained to assure effectiveness and compliance with TED regulations, and mesh stretching is not unique to the soft TED. It is possible that large mesh stretches in the soft TED panel over time, and fishermen using this TED need to check mesh sizes in these panels to ensure that meshes have not become stretched beyond the allowable specifications. For these reasons, we disagree that the Parker TED needs to be re-evaluated.

Comment 4: The Boone Big Boy TED submitted to NMFS for testing was constructed of steel rod with a minimum outside diameter of ½ inch for the frame and with 4-inch bar

spacing; however, the Boone Big Boy TED is typically constructed of steel rod with a minimum outside diameter of ⅜ inch for the frame and with 2-inch bar spacing. The Boone Big Boy TED should allow use of ⅜-inch steel rod for construction of the TED frame.

Response: TED integrity is relevant to sea turtle exclusion or escapement, and we established minimum construction material requirements to maintain TED integrity and performance during fishing operations. Based upon many years of experience designing, testing and monitoring TEDs, NMFS' gear specialists with the Southeast Fisheries Science Center's Harvesting Systems and Engineering Branch have determined a ⅛-inch difference in steel rod diameter will (or does) not negatively affect the structural integrity of the Boone Big Boy TED, nor does it adversely affect sea turtle exclusion. As an example, the minimum outside diameter for steel rod used in a standard single-grid hard TED (i.e., minimum horizontal and vertical measurement of 32 inches) is ¼ inch. As the dimensions for a single-grid hard TED are minimums, one could legally construct, for example, a single-grid hard TED with horizontal and vertical measurements of 36.5 and 48 inches, respectively, with a ¼-inch steel rod frame, which would be the same as the dimensions of the Boone Big Boy TED. Single-grid hard TEDs with these dimensions have passed the small turtle test escapement protocols. Therefore, this final rule specifies a ⅜-inch minimum outside diameter of steel rod for the Boone Big Boy TED, not the ½-inch diameter originally included in the proposed rule.

Comment 5: Alternative management actions, such as the use of sea turtle grow-out facilities operated by the commercial fishing industry or electronic avoidance equipment, should be utilized instead of TEDs to reduce sea turtle interactions.

Response: While there may be alternative measures to reduce sea turtle bycatch in trawl fisheries, the submitted suggestions are beyond the scope of this action. At this time, NMFS cannot add or substitute actions to a rule that were not originally proposed. Nevertheless, NMFS appreciates the input and contribution from the public on the need and appropriateness of alternative options. NMFS continues to consider alternative measures, and if we determine such measures become appropriate, we will propose them in a future rulemaking.

Comment 6: Fishermen should be involved in TED development, and should be financially rewarded for innovation in reducing sea turtle interactions.

Response: NMFS agrees that fishermen should be involved in TED development. We note that the new materials and alternative designs included in this rule were tested, developed, and advocated by commercial fishermen. However, while we agree that fishermen should be (and are) involved in TED development, offering financial incentives or awards for TED development is beyond the scope of this action.

Summary of Changes From the Proposed Rule

Based on the comments received, we have made one substantive change to the proposed rule. As noted above, the proposed rule stated the Boone Big Boy TED was to be constructed of steel rod with a minimum outside diameter of ½ inch. Based on further evaluation, however, we decided that steel rod with a minimum outside diameter of ⅜ inch was acceptable for use in the construction of the Boone Big Boy TED.

Summary of Revisions to the TED Requirements

As a result of documented testing and evaluations, this rule authorizes: Using ¼ inch (0.63 cm) thick and 1½ inch (3.8 cm) deep flat bar, and rectangular and oval pipe meeting the current minimum dimensions cited at 50 CFR 223.207(a)(1) as construction materials in currently-approved TED grids; increasing maximum mesh size on escape flaps from 1⅝ to 2 inches (4.1 to 5.1 cm); including the Boone Big Boy TED for use in the shrimp fisheries; using three large TED and Boone Wedge Cut escape openings; using the Chauvin Shrimp Deflector in a top-opening TED configuration to improve shrimp retention; using a horizontal brace bar on a TED to increase the strength of the grid and prevent flexing of the vertical deflector bars; and using the modified founder TED in the summer founder fishery. This rule also corrects an error regarding the maximum size chain that can be used on the Parker TED escape opening flap.

Certifications

At the proposed rule stage for this action, the Chief Counsel for Regulation of the Department of Commerce certified to the Chief Counsel for Advocacy of the Small Business Administration that this rule would not have a significant economic impact on a substantial number of small entities. Therefore, a Final Regulatory Flexibility Analysis was not required. The factual basis leading to the certification is set forth below.

This rule would not impose any new requirements on fishing entities in the southeastern shrimp fisheries. An exact number of total fishing entities in the southeastern shrimp fisheries is unavailable, though approximately 5,000 vessels are estimated to be currently active. This rule simply allows fishermen, at their discretion, to use a alternative TEDs in their shrimp nets. NMFS expects fishermen will make these decisions only when they will result in improved fishing performance without a substantial increase in cost. As a result, any effects are expected to be positive and no adverse economic impacts are expected to accrue.

This final rule has been determined to be not significant for the purposes of Executive Order 12866.

The Endangered Species Act provides the statutory basis for the rule.

List of Subjects in 50 CFR Part 223

Endangered and threatened species; Exports; Imports; Transportation.

Dated: May 11, 2012.

Samuel D. Rauch III,

Acting Assistant Administrator for Fisheries, National Marine Fisheries Service.

For the reasons set out in the preamble, 50 CFR part 223 is amended as follows:

PART 223—THREATENED MARINE AND ANADROMOUS SPECIES.

■ 1. The authority citation for part 223 continues to read as follows:

Authority: 16 U.S.C. 1531–1543; subpart B, § 223.201–202 also issued under 16 U.S.C. 1361 *et seq.;* 16 U.S.C. 5503(d) for § 223.206(d)(9).

■ 2. In § 223.207:
■ a. Paragraph (a)(1)(i) introductory text is revised;
■ b. Paragraph (a)(1)(i)(C) is revised;
■ c. New paragraph (a)(1)(i)(D) is added;
■ d. Paragraphs (a)(7)(ii)(D) and (a)(7)(ii)(E) are added;
■ e. New paragraphs (b)(3) and (b)(4) are added;
■ f. Paragraph (c)(1)(iv)(B) is revised;
■ g. Paragraphs (d)(3) introductory text and (d)(3)(iii) are revised; and
■ h. Paragraphs (d)(3)(iv), (d)(8), and (d)(9) are added.

The revisions and additions read as follows:

§ 223.207 Approved TEDs.

* * * * *

(a) * * *

(1) * * *

(i) *Single-grid and inshore hooped hard TED.* A single-grid hard TED or an

inshore hooped hard TED must be constructed of one or a combination of the following materials, unless otherwise specifically restricted below, with minimum dimensions as follows:

* * * * *

(C) Steel or aluminum round, oval, or rectangular tubing with a minimum outside diameter or width of ½ inch (1.27 cm) and a minimum wall thickness of ⅛ inch (0.32 cm; also known as schedule 40 tubing).

(D) Steel or aluminum flat bar with dimensions no less than ¼ inch (0.64 cm) in thickness by 1½ inches (3.85 cm) in depth. For flat bar less than ⅜ inch (0.95 cm) in thickness, a horizontal brace bar to reinforce the deflector bars must be permanently attached to the frame and the rear face of each of the deflector bars within 4 inches (10.2 cm) of the midpoint of the TED frame. The horizontal brace bar must be constructed of approved material consistent with paragraph (a)(1)(i) of this section. The horizontal brace bar may be offset behind the deflector bars, using spacer bars, not to exceed 5 inches (12.7 cm) in length and constructed of the same size or larger flat bar as the deflector bars.

* * * * *

(7) * * *

(ii) * * *

(D) *Boone Wedge Cut opening.* (Figure 17 to this part). The escape opening is made by making two cuts in the TED extension; one cut is fore and aft (i.e., along the length of the extension) and the other cut is horizontal to the extension. The horizontal cut is 50 meshes long and begins at a point 4 inches (10.2 cm) inward from the outside edge of the grid on one side and runs to the same point on the opposite side of the grid. The fore and aft cut begins in the middle of the horizontal cut and runs forward 49.5 inches (125.7 cm) toward the front edge of the TED extension. The added wedge of webbing is attached along its two leading edges to the edges of the fore and aft cut. The webbing wedge is made of 1⅞ inch (4.8 cm) webbing and must have at least 41 meshes measuring at least 72 inches wide (182.9 cm) along its base (aft edge). The height of the wedge must measure at least 48.5 inches (123 cm). The top of the wedge is two bars across the leading edge then cut with a 1 point then 6 bar taper. A webbing flap, as described in paragraph (d)(3)(iv) of this section, may be used with this escape opening, so long as the minimum opening size is achieved.

(E) *Large TED openings.* (Figures 18a, 18b, and 18c to this part). Large TED escape openings may be utilized in the following configurations:

(*1*) A triangular cut (Figure 18a to this part), where the base of the triangle is defined by a straight-line measurement of the opening between the webbing attachment points on the TED frame that is no less than 40 inches (102 cm). The two side cuts of the triangle must be an all-bar taper from the point at which the webbing attaches to the TED frame to the apex of the triangle cut. Each side cut of the triangle must measure no less than 53 inches (135 cm). The sum of the straight-line base measurement and two side cuts must be no less than 147 inches (373 cm). The side cuts of the triangular opening may be reinforced using rib lines attached from the TED frame to the apex of the opening. A webbing flap, as described in either paragraph (d)(3)(ii) or (d)(3)(iii) of this section, may be used with this escape opening, so long as the minimum opening size is achieved.

(*2*) All-bar or all-points side cuts and a horizontal leading edge cut (Figures 18b and 18c to this part), where the straight-line measurement of the opening between the webbing attachment points on the TED frame may not be less than 40 inches (102 cm), and the two side cuts of the escape opening must not be less than 26 inches (66 cm) long from the points of the cut immediately forward of the TED frame. Only all-bar or all-points side cuts may be used; no combination tapers may be used when making the side cuts. The sum of the straight-line base measurement and the stretched measurements of the side cuts and leading edge cut must be no less than 147 inches (373 cm). A webbing flap, as described in either paragraph (d)(3)(ii) or (d)(3)(iii) of this section, may be used with this escape opening, so long as the minimum opening size is achieved.

* * * * *

(b) * * *

(3) *Boone Big Boy TED.* The Boone Big Boy TED is a single-grid hard TED with a minimum outside horizontal and vertical measurement of 36.5 inches (92.7 cm) and 48 inches (121.9 cm), respectively. The frame must be constructed of steel rod with a minimum outside diameter of ⅜ inch (0.95 cm). The deflector bars must be constructed of steel rod with a minimum outside diameter of ¼ inch (0.64 cm). The space between the deflector bars must not exceed 4 inches (10.2 cm). A horizontal brace bar constructed of at least ¼-inch (0.64-cm) steel rod must be permanently attached to the frame and the rear face of each of the deflector bars within 4 inches (10.2 cm) of the midpoint of the TED frame. The horizontal brace bar may be offset behind the deflector bars, using spacer bars, not to exceed 5 inches (12.7 cm) in length and must be constructed of the same size or larger material as the deflector bars. The Boone Big Boy TED must be used with the Boone Wedge Cut escape opening specified in (a)(7)(ii)(D) of this section. The angle of the deflector bars must be between 30° and 55° from the normal, horizontal flow through the interior of the trawl. The Boone Big Boy TED is exempt from the requirements of paragraph (a)(3)(ii) of this section, and may be installed at 55° when fishing in the Gulf SFSTCA or the Atlantic SFSTCA.

(4) *Modified flounder TED.* (Figure 11 to this part). The modified flounder TED is approved for use only in the Atlantic summer flounder bottom trawl fishery. The modified flounder TED is not an approved TED for use by shrimp trawlers. The modified flounder TED incorporates two separate grid frames that are attached together. The frames of the grids must be constructed of at least 1¼ inch (3.2 cm) outside diameter aluminum or steel pipe with a wall thickness of at least ⅛ inch (0.32 cm). Each of the two grids of the modified flounder TED must have outside dimensions of at least 36 inches (91.4 cm) in height and at least 48 inches (121.9 cm) in width. The upper grid is equipped with vertical deflector bars, which must be constructed of aluminum or steel flat bar with a minimum depth of 1¼ inches (3.2 cm) and a minimum thickness of ⅜ inch (0.95 cm). Vertical deflector bars must be connected to the top and bottom of the upper grid. The space between the deflector bars of the upper grid must not exceed 4 inches (10.2 cm). The lower grid is fabricated with both horizontal and vertical deflector bars, creating four narrow horizontal openings at the top, and three large rectangular openings along the bottom of the grid. The lower grid must have at least three horizontal deflector bars, constructed of aluminum or steel flat bar with a minimum depth of 1½ inches (3.8 cm) and a minimum thickness of ⅜ inch (0.95 cm), which are connected to each side of the grid and angled at 30° from the horizontal plane. Below this, a fourth horizontal deflector bar must be constructed of aluminum or steel pipe with a wall thickness of at least ⅛ inch (0.32 cm) and with a 1¼ inch (3.2 cm) outside diameter. These horizontal deflector bars must yield maximum spacings of 4½ inches (11.4 cm), 5½ inches (14.0 cm), 5½ inches (14.0 cm), and 4½ inches (11.4 cm), as constructed from

top to bottom and measured between the leading edges of adjacent deflector bars. There must be a maximum 10-inch (25.4 cm) space between the bottom-most horizontal deflector pipe bar and the grid frame bottom. Two additional vertical pipe sections running from the bottom of the grid frame to the bottom-most horizontal deflector pipe bar must divide the opening at the bottom into three rectangles, each with a maximum height of 10 inches (25.4 cm) and a maximum width of 14 inches (35.6 cm). This TED must comply with paragraph (a)(2) of this section. The upper and lower grids of this TED must be laced together with heavy twine no less than ¼ inch (0.64 cm) in diameter in order to maintain a consistent angle in both sections. There may be a gap between the two sections not to exceed 1 inch (2.54 cm). The angle of the entire TED frame must be between 30° and 45° from the normal, horizontal flow through the interior of the trawl. The entire width of the escape opening from the trawl must be centered on and immediately forward of the frame at the top of the net when the net is in its deployed position. The slope of the grids and the vertical deflector bars from forward to aft is upward. The modified flounder TED must use an escape opening consistent with paragraph (a)(7)(ii)(B), (C), (D), or (E) of this section. A webbing flap, as described in paragraphs (d)(3)(ii), (iii), or (iv) of this section, may be used with this escape opening, so long as the minimum opening size is achieved. This TED may not be configured with a bottom escape opening. Installation of an accelerator funnel is not permitted with this TED.

* * * * *

(c) * * *

(1) * * *

(iv) * * *

(B) *Offshore opening.* A horizontal cut extending from the attachment of one side of the deflector panel to the trawl to the attachment of the other side of the deflector panel to the trawl must be made in a single row of meshes across the top of the trawl and measure at least 96 inches (243.8 cm) in taut width. All trawl webbing above the deflector panel between the 96-inch (243.8-cm) cut and edges of the deflector panel must be removed. A rectangular flap of nylon webbing not larger than 2-inch (5.1-cm) stretched mesh may be sewn to the forward edge of the escape opening. The width of the flap must not be larger than the width of the forward edge of the escape opening. The flap must not extend more than 12 inches (30.5 cm) beyond the rear point of the escape opening. The sides of the flap may be attached to the top of the trawl but must not be attached farther aft than the row of meshes through the rear point of the escape opening. One row of steel chain not larger than ¼ inch (0.64 cm) may be sewn evenly to the back edge of the flap. The stretched length of the chain must not exceed 96 inches (244 cm). A Parker TED using the escape opening described in this paragraph meets the requirements of § 223.206(d)(2)(iv)(B). This opening or one that is larger must be used in all offshore waters and in the inshore waters of Georgia and South Carolina. It also may be used in other inshore waters.

* * * * *

(d) * * *

(3) *Webbing flap.* A webbing flap may be used to cover the escape opening under the following conditions: No device holds it closed or otherwise restricts the opening; it is constructed of webbing with a stretched mesh size no larger than 2 inches (5.1 cm); it lies on the outside of the trawl; it is attached along its entire forward edge forward of the escape opening; it is not attached on the sides beyond the row of meshes that lies 6 inches (15.2 cm) behind the posterior edge of the grid; the sides of the flap are sewn on the same row of meshes fore and aft; and the flap does not overlap the escape hole cut by more than 5 inches (12.7 cm) on either side.

* * * * *

(iii) *Double cover offshore TED flap.* This flap must be composed of two equal size rectangular panels of webbing. Each panel must be no less than 58 inches (147.3 cm) wide and may overlap each other no more than 15 inches (38.1 cm). The panels may only be sewn together along the leading edge of the cut. The trailing edge of each panel must not extend more than 24 inches (61 cm) past the posterior edge of the grid (Figure 16 to this part). Each panel may be sewn down the entire length of the outside edge of each panel. Paragraph (d)(3) of this section notwithstanding, this flap may be installed on either the outside or inside of the TED extension. For interior installation, the flap may be sewn to the interior of the TED extension along the leading edge and sides to a point intersecting the TED frame; however, the flap must be sewn to the exterior of the TED extension from the point at which it intersects the TED frame to the trailing edge of the flap. Chafing webbing described in paragraph (d)(4) of this section may not be used with this type of flap.

(iv) *Boone Wedge Cut opening flap.* (Figure 17 to this part). This escape opening flap is attached to the trailing edge of the horizontal cut and the wedge. The flap is made from a piece of 1⅞ inch (4.8 cm) webbing that is trapezoid in shape. The leading edge must be at least 94 meshes wide, stretching to at least 164.5 inches (417.8 cm). The trailing edge is at least 87 meshes wide and at least 152 inches (386.1 cm). The two sides are at least 8 meshes long and at least 15 inches (38.1 cm). The escape opening flap is attached only to the leading edge of the escape opening cut and is not attached along its sides.

* * * * *

(8) *Chauvin shrimp deflector.* (Figures 19a and 19b to this part). The Chauvin shrimp deflector may be used on any approved TED design, but its installation must not reduce the minimum stretched measurements of the TED opening. The Chauvin shrimp deflector may not be installed with a bottom escape opening. The Chauvin shrimp deflector is constructed from a single piece of 3-inch (7.6-cm) inside diameter PVC pipe which measures 30 inches (76.2 cm) in length; the ends of the PVC pipe are left uncapped. A webbing or mesh bag is made and is used to encase the PVC pipe (Figure 19a to this part). The mesh bag is created using a single piece of 1⅝ inch (4.1 cm) stretched-mesh webbing made of nylon or polyethylene with dimensions 57 meshes wide by 10 meshes deep. The leading edge of the 57-mesh piece of webbing is attached around the PVC pipe and back to the row of meshes located 7 meshes down the 10-mesh length. The ends of the webbing are sewn together on each end forming a webbing bag to assure the PVC pipe remains encased in the webbing. This leaves a 3-mesh tail hanging from the encased PVC pipe. The 3-mesh tail of the encased PVC pipe is then sewn to a single row of meshes on the inside of the trawl along the 57-mesh edge, 3 meshes ahead of the forward cut of the TED escape opening. This would allow a 3-mesh overlap to the left and right of the forward cut (Figure 19b to this part).

(9) *Brace bar.* (Figure 14a to this part). A horizontal brace bar may be added to a TED if it is constructed of aluminum or steel rod or tubing specified in 50 CFR 223.207(a)(1)(i)(A)–(C) and it is permanently attached to the frame and the rear face of each of the deflector bars within 4 inches (10.2 cm) of the midpoint of the TED frame. The horizontal brace bar may be offset behind the deflector bars, using spacer bars, not to exceed 5 inches (12.7 cm) in length and must be constructed of the

same size or larger material as the deflector bars.

* * * * *

3. Add Figure 11 to Part 223 to read as follows:

BILLING CODE 3510–22–P

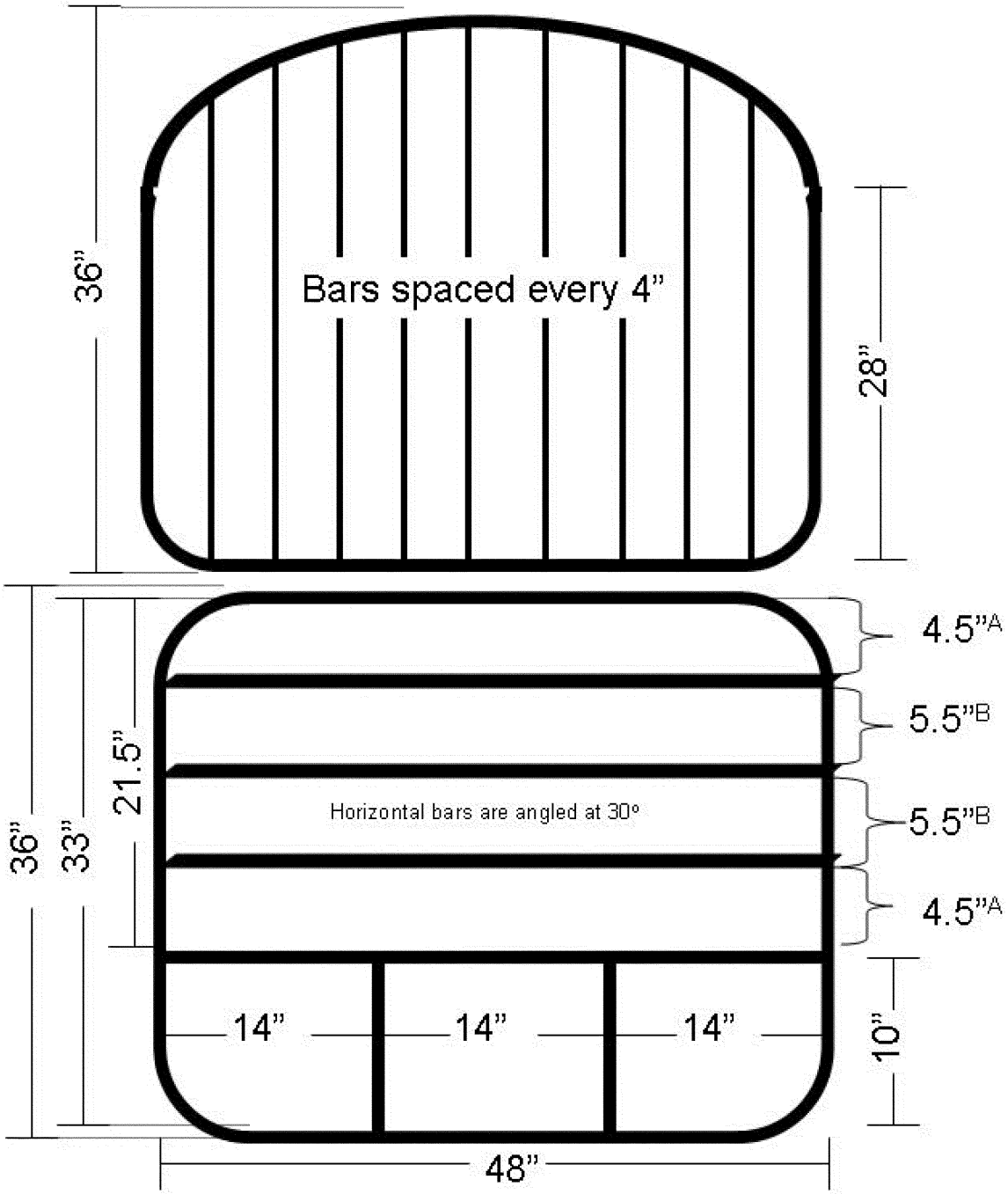

All pipe must be a minimum of 1.25" O.D.; horizontal flat bars shall be a minimum of 1.5" x 0.375"; vertical flat bars shall be a minimum of 1.25" x 0.375"

A – Space between edge of round bar and the leading edge of the adjacent bar is 4.5"

B – Space between leading edge of one bar and the leading edge of the adjacent bar is 5.5"

FIGURE 11 TO PART 223 -- MODIFIED FLOUNDER TED

■ 4. Add Figure 17 to Part 223 to read as follows:

Escape Opening Cut Dimensions

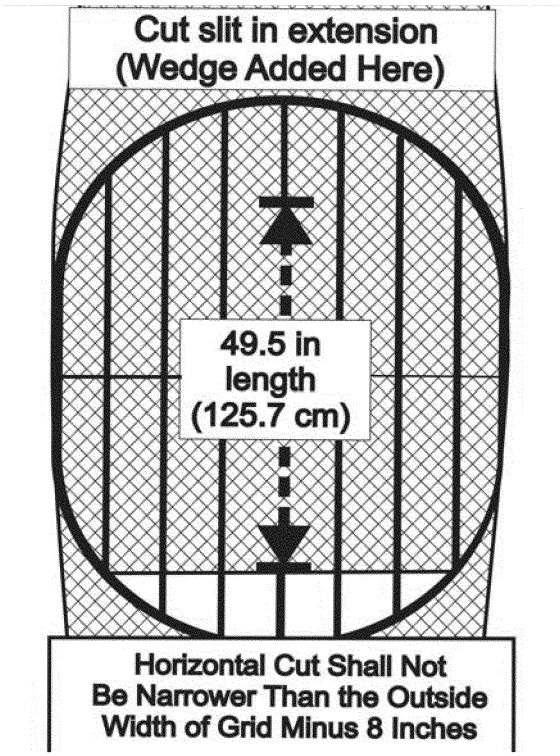

Webbing Wedge Dimensions

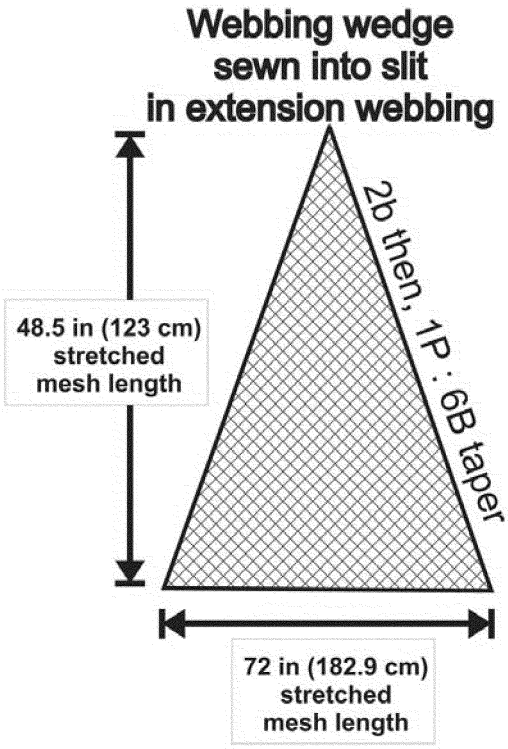

Escape Opening Flap Dimensions

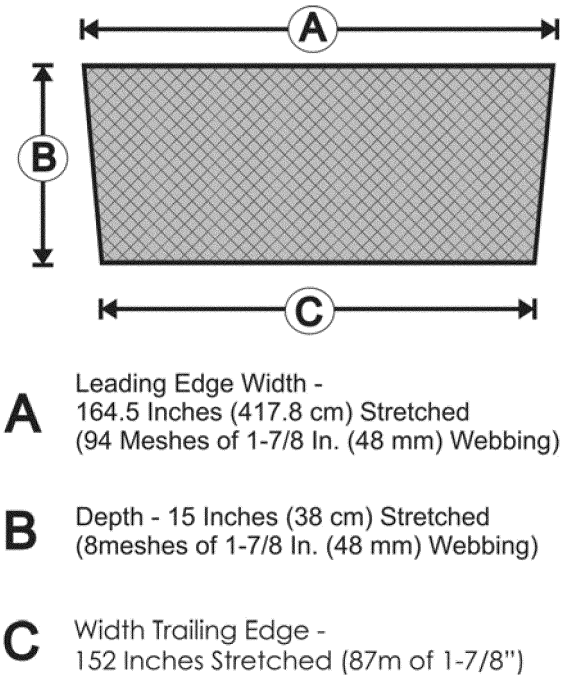

Escape Opening Flap Attachment

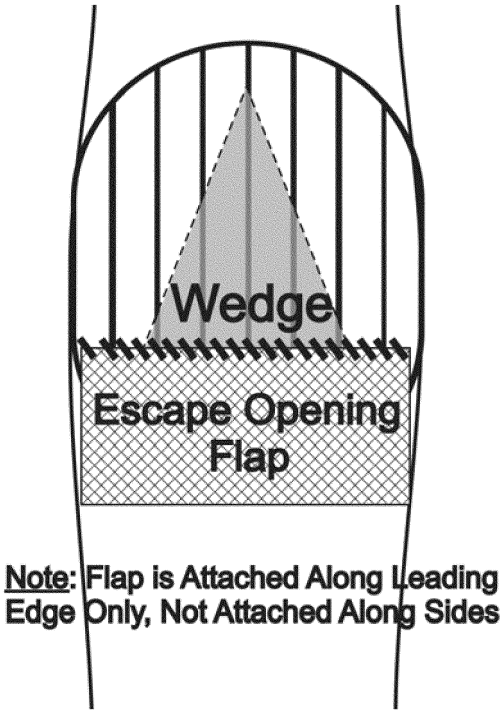

FIGURE 17 TO PART 223 -- BOONE WEDGE CUT ESCAPE OPENING

■ 5. Add Figures 18a, 18b, and 18c to Part 223 to read as follows:

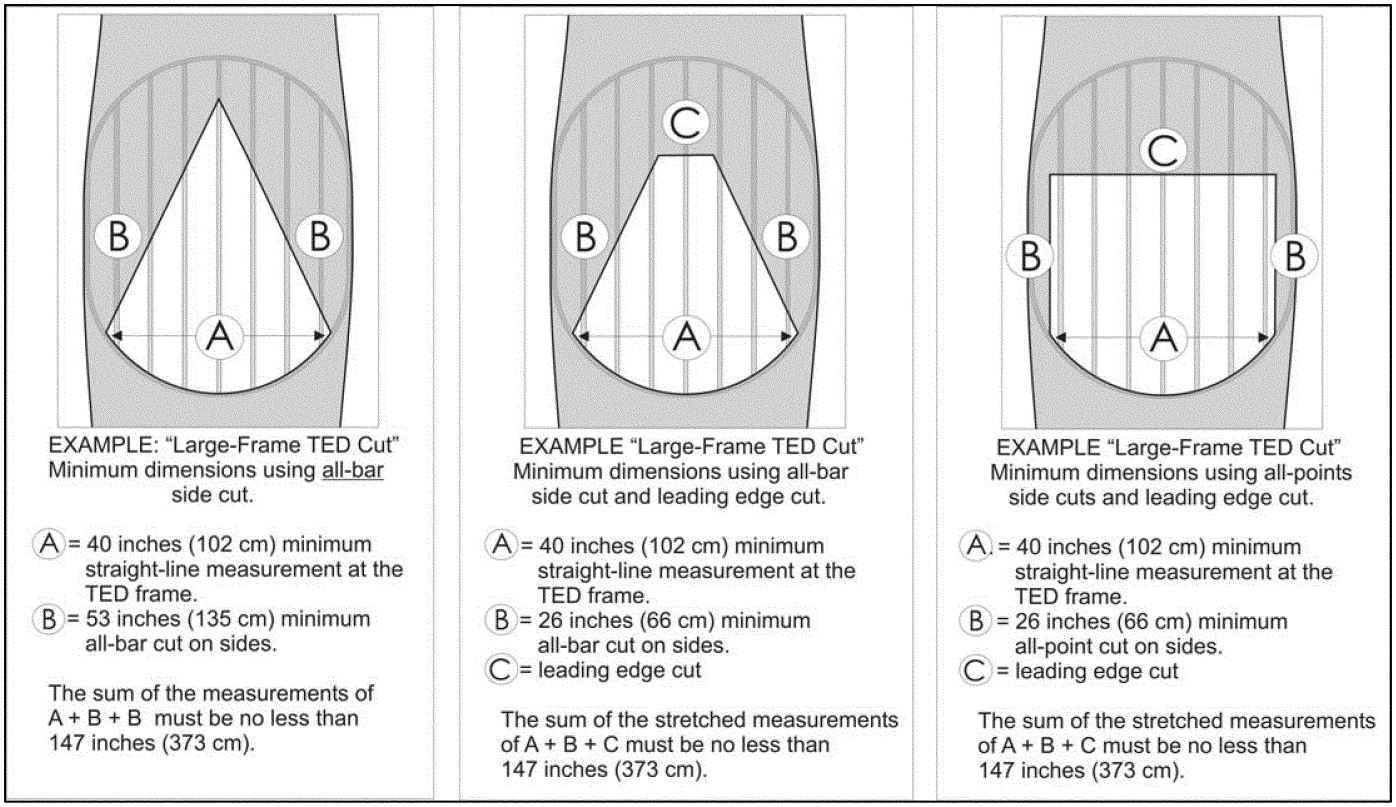

FIGURES 18a, 18b, AND 18c TO PART 223. LARGE FRAME TED ESCAPE OPENING: MINIMUM DIMENSIONS USING ALL-BAR CUTS (TRIANGULAR CUT); LARGE FRAME TED ESCAPE OPENING: MINIMUM DIMENSIONS USING ALL-BAR CUTS AND LEADING EDGE CUT; LARGE FRAME TED ESCAPE OPENING: MINIMUM DIMENSIONS USING ALL-POINTS SIDE CUT (RECTANGULAR CUT)

■ 6. Add Figures 19a and 19b to Part 223 to read as follows:

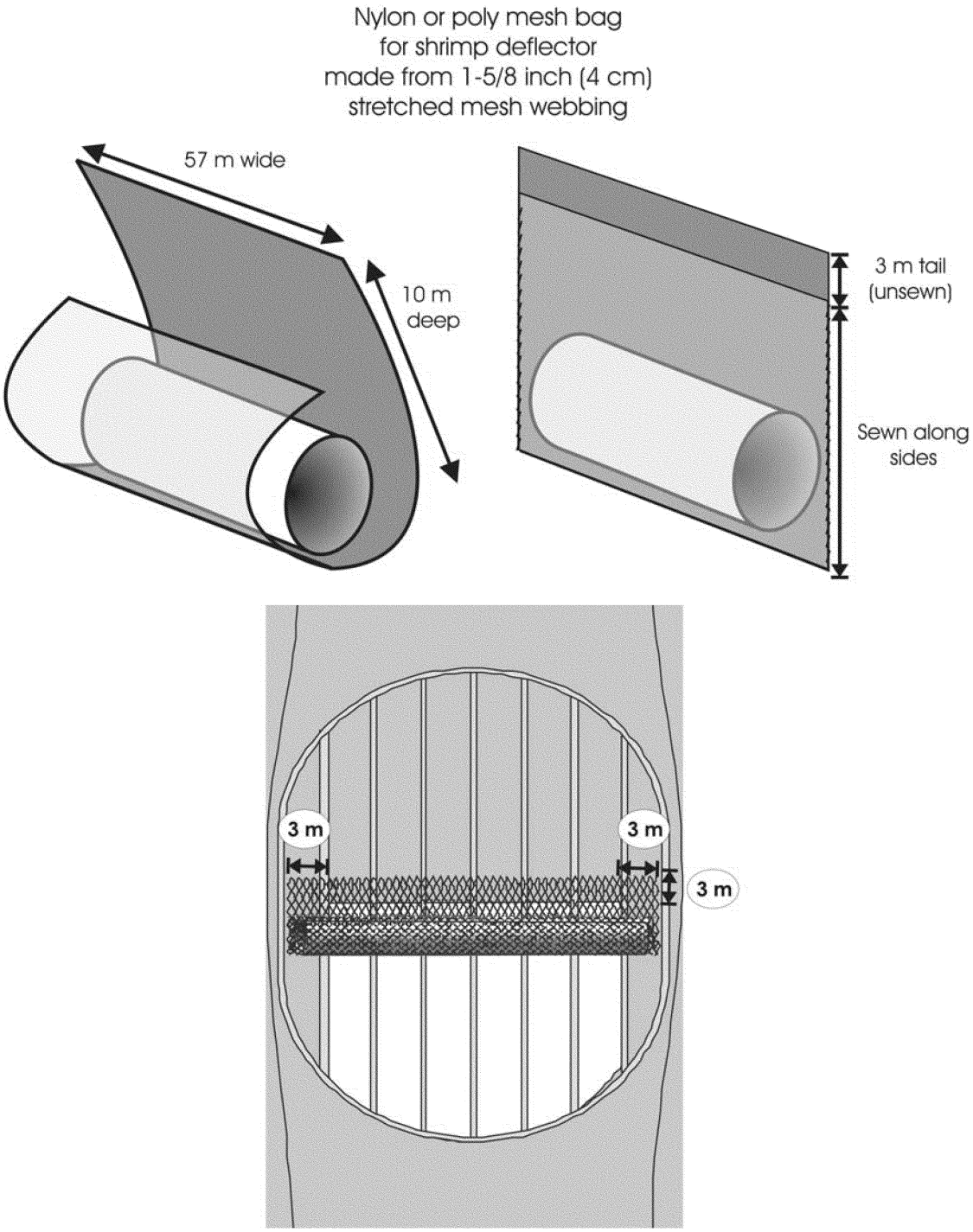

FIGURES 19a AND 19b TO PART 223. CHAUVIN SHRIMP DEFLECTOR INSTALLATION DETAILS

[FR Doc. 2012–12014 Filed 5–18–12; 8:45 am]
BILLING CODE 3510–22–C

Proposed Rules

Federal Register
Vol. 77, No. 98
Monday, May 21, 2012

This section of the FEDERAL REGISTER contains notices to the public of the proposed issuance of rules and regulations. The purpose of these notices is to give interested persons an opportunity to participate in the rule making prior to the adoption of the final rules.

DEPARTMENT OF AGRICULTURE

Animal and Plant Health Inspection Service

9 CFR Parts 92, 93, 94, 95, 96, and 98

[Docket No. APHIS–2008–0010]

RIN 0579–AC68

Bovine Spongiform Encephalopathy; Importation of Bovines and Bovine Products

AGENCY: Animal and Plant Health Inspection Service, USDA.

ACTION: Proposed rule; reopening of comment period.

SUMMARY: We are reopening the comment period for our proposed rule that would amend the regulations that govern the importation of animals and animal products to revise the conditions for the importation of live bovines and products derived from bovines with regard to bovine spongiform encephalopathy. This action will allow interested persons additional time to prepare and submit comments.

DATES: We will consider all comments that we receive on or before June 14, 2012.

ADDRESSES: You may submit comments by either of the following methods:

- *Federal eRulemaking Portal:* Go to *http://www.regulations.gov/#!documentDetail;D=APHIS-2008-0010-0001.*
- *Postal Mail/Commercial Delivery:* Send your comment to Docket No. APHIS–2008–0010, Regulatory Analysis and Development, PPD, APHIS, Station 3A–03.8, 4700 River Road, Unit 118, Riverdale, MD 20737–1238.

Supporting documents and any comments we receive on this docket may be viewed at *http://www.regulations.gov/#!docketDetail;D=APHIS-2008-0010* or in our reading room, which is located in Room 1141 of the USDA South Building, 14th Street and Independence Avenue SW., Washington, DC. Normal reading room hours are 8 a.m. to 4:30 p.m., Monday through Friday, except holidays. To be sure someone is there to help you, please call (202) 799–7039 before coming.

FOR FURTHER INFORMATION CONTACT: For information concerning live ruminants, contact Dr. Betzaida Lopez, Import Animal Staff Veterinarian, Technical Trade Services, Animals, Organisms and Vectors, and Select Agents, National Center for Import and Export, VS, APHIS, 4700 River Road Unit 39, Riverdale, MD 20737–1231; (301) 851–3364.

For information regarding ruminant products and for other information regarding this proposed rule, contact Dr. Christopher Robinson, Assistant Director, Technical Trade Services, Animal Products, National Center for Import and Export, VS, APHIS, 4700 River Road Unit 38, Riverdale, MD 20737–1231; (301) 851–3300.

SUPPLEMENTARY INFORMATION: On March 16, 2012, we published in the **Federal Register** (77 FR 15848–15913, Docket No. APHIS–2008–0010) a proposal to amend the regulations that govern the importation of animals and animal products to revise the conditions for the importation of live bovines and products derived from bovines with regard to bovine spongiform encephalopathy.

Comments on the proposed rule were required to be received on or before May 15, 2012. We are reopening the comment period on Docket No. APHIS–2008–0010 for an additional 30 days. This action will allow interested persons additional time to prepare and submit comments. We will also consider all comments received between May 16, 2012 (the day after the close of the original comment period) and June 14, 2012.

Authority: 7 U.S.C. 8301–8317; 21 U.S.C. 136 and 136a; 31 U.S.C. 9701; 7 CFR 2.22, 2.80, and 371.4.

Done in Washington, DC, this 17th day of May 2012.

Gregory L. Parham,

Administrator, Animal and Plant Health Inspection Service.

[FR Doc. 2012–12318 Filed 5–17–12; 11:15 am]

BILLING CODE 3410–34–P

DEPARTMENT OF TRANSPORTATION

Federal Aviation Administration

14 CFR Part 39

[Docket No. FAA–2012–0489; Directorate Identifier 2011–NM–229–AD]

RIN 2120–AA64

Airworthiness Directives; BAE SYSTEMS (Operations) Limited Airplanes

AGENCY: Federal Aviation Administration (FAA), DOT.

ACTION: Notice of proposed rulemaking (NPRM).

SUMMARY: We propose to adopt a new airworthiness directive (AD) for all BAE SYSTEMS (Operations) Limited Model 4101 airplanes. This proposed AD was prompted by reports that the fire extinguisher in the toilet vanity unit needs to be mounted vertically rather than horizontally. This proposed AD would require inspecting to determine if a certain fire extinguisher bottle is installed, and repositioning the affected fire extinguisher bottle to the vertical position. We are proposing this AD to detect and correct the orientation of the fire extinguisher bottle in the toilet vanity unit to the vertical position, which if not corrected, could result in a toilet waste bin fire spreading, and consequent damage to the airplane and injury to its occupants.

DATES: We must receive comments on this proposed AD by July 5, 2012.

ADDRESSES: You may send comments by any of the following methods:

- *Federal eRulemaking Portal:* Go to *http://www.regulations.gov.* Follow the instructions for submitting comments.
- *Fax:* (202) 493–2251.
- *Mail:* U.S. Department of Transportation, Docket Operations, M–30, West Building Ground Floor, Room W12–140, 1200 New Jersey Avenue SE., Washington, DC 20590.
- *Hand Delivery:* U.S. Department of Transportation, Docket Operations, M–30, West Building Ground Floor, Room W12–140, 1200 New Jersey Avenue SE., Washington, DC, between 9 a.m. and 5 p.m., Monday through Friday, except Federal holidays.

For service information identified in this proposed AD, contact BAE SYSTEMS (Operations) Limited, Customer Information Department,

Prestwick International Airport, Ayrshire, KA9 2RW, Scotland, United Kingdom; telephone +44 1292 675207; fax +44 1292 675704; email *RApublications@baesystems.com;* Internet *http://www.baesystems.com/Businesses/RegionalAircraft/index.htm.* You may review copies of the referenced service information at the FAA, Transport Airplane Directorate, 1601 Lind Avenue SW., Renton, Washington. For information on the availability of this material at the FAA, call 425–227–1221.

Examining the AD Docket

You may examine the AD docket on the Internet at *http://www.regulations.gov;* or in person at the Docket Operations office between 9 a.m. and 5 p.m., Monday through Friday, except Federal holidays. The AD docket contains this proposed AD, the regulatory evaluation, any comments received, and other information. The street address for the Docket Operations office (telephone (800) 647–5527) is in the **ADDRESSES** section. Comments will be available in the AD docket shortly after receipt.

FOR FURTHER INFORMATION CONTACT: Todd Thompson, Aerospace Engineer, International Branch, ANM–116, Transport Airplane Directorate, FAA, 1601 Lind Avenue SW., Renton, Washington 98057–3356; phone 425–227–1175; fax 425–227–1149.

SUPPLEMENTARY INFORMATION:

Comments Invited

We invite you to send any written relevant data, views, or arguments about this proposed AD. Send your comments to an address listed under the **ADDRESSES** section. Include ''Docket No. FAA–2012–0489; Directorate Identifier 2011–NM–229–AD'' at the beginning of your comments. We specifically invite comments on the overall regulatory, economic, environmental, and energy aspects of this proposed AD. We will consider all comments received by the closing date and may amend this proposed AD based on those comments.

We will post all comments we receive, without change, to *http://www.regulations.gov,* including any personal information you provide. We will also post a report summarizing each substantive verbal contact we receive about this proposed AD.

Discussion

The European Aviation Safety Agency (EASA), which is the Technical Agent for the Member States of the European Community, has issued EASA Airworthiness Directive 2011–0194, dated October 6, 2011 (referred to after this as ''the MCAI''), to correct an unsafe condition for the specified products. The MCAI states:

> The Jetstream 4100 is equipped with a fire extinguisher that, if a fire is detected, discharges into the waste bin located within the toilet vanity unit.
>
> On the majority of aeroplanes, the furnishing vendor's original design installs the fire extinguisher bottle part number (P/N) BA20509AM–4 in a horizontal position within the vanity unit. BAE Systems have subsequently been informed by the fire extinguisher manufacturer that the fire extinguisher bottle should be mounted vertically, as its operation cannot be guaranteed when mounted horizontally. In the event of a fire in the waste bin the extinguishant may not fully discharge from the fire extinguisher bottle.
>
> This condition, if not corrected, could result in a toilet waste bin fire propagation and consequent damage to the aeroplane and/or injury to its occupants.
>
> For the reasons described above, this [EASA] AD requires [an inspection to determine if a certain fire extinguisher is installed and] the repositioning of the fire extinguisher bottle from a horizontal orientation to a vertical orientation.

You may obtain further information by examining the MCAI in the AD docket.

Relevant Service Information

BAE SYSTEMS (Operations) Limited has issued Service Bulletin J41–26–008, Revision 2, dated September 20, 2011. The actions described in this service information are intended to correct the unsafe condition identified in the MCAI.

FAA's Determination and Requirements of This Proposed AD

This product has been approved by the aviation authority of another country, and is approved for operation in the United States. Pursuant to our bilateral agreement with the State of Design Authority, we have been notified of the unsafe condition described in the MCAI and service information referenced above. We are proposing this AD because we evaluated all pertinent information and determined an unsafe condition exists and is likely to exist or develop on other products of the same type design.

Costs of Compliance

Based on the service information, we estimate that this proposed AD would affect about 4 products of U.S. registry. We also estimate that it would take about 8 work-hours per product to comply with the basic requirements of this proposed AD. The average labor rate is $85 per work-hour. Required parts would cost about $170 per product. Where the service information lists required parts costs that are covered under warranty, we have assumed that there will be no charge for these parts. As we do not control warranty coverage for affected parties, some parties may incur costs higher than estimated here. Based on these figures, we estimate the cost of the proposed AD on U.S. operators to be $3,400, or $850 per product.

Authority for This Rulemaking

Title 49 of the United States Code specifies the FAA's authority to issue rules on aviation safety. Subtitle I, section 106, describes the authority of the FAA Administrator. ''Subtitle VII: Aviation Programs,'' describes in more detail the scope of the Agency's authority.

We are issuing this rulemaking under the authority described in ''Subtitle VII, Part A, Subpart III, Section 44701: General requirements.'' Under that section, Congress charges the FAA with promoting safe flight of civil aircraft in air commerce by prescribing regulations for practices, methods, and procedures the Administrator finds necessary for safety in air commerce. This regulation is within the scope of that authority because it addresses an unsafe condition that is likely to exist or develop on products identified in this rulemaking action.

Regulatory Findings

We determined that this proposed AD would not have federalism implications under Executive Order 13132. This proposed AD would not have a substantial direct effect on the States, on the relationship between the national Government and the States, or on the distribution of power and responsibilities among the various levels of government.

For the reasons discussed above, I certify this proposed regulation:

1. Is not a ''significant regulatory action'' under Executive Order 12866;
2. Is not a ''significant rule'' under the DOT Regulatory Policies and Procedures (44 FR 11034, February 26, 1979);
3. Will not affect intrastate aviation in Alaska; and
4. Will not have a significant economic impact, positive or negative, on a substantial number of small entities under the criteria of the Regulatory Flexibility Act.

We prepared a regulatory evaluation of the estimated costs to comply with this proposed AD and placed it in the AD docket.

List of Subjects in 14 CFR Part 39

Air transportation, Aircraft, Aviation safety, Incorporation by reference, Safety.

The Proposed Amendment

Accordingly, under the authority delegated to me by the Administrator, the FAA proposes to amend 14 CFR part 39 as follows:

PART 39—AIRWORTHINESS DIRECTIVES

1. The authority citation for part 39 continues to read as follows:

Authority: 49 U.S.C. 106(g), 40113, 44701.

§ 39.13 [Amended]

2. The FAA amends § 39.13 by adding the following new AD:

BAE SYSTEMS (Operations) Limited: Docket No. FAA–2012–0489; Directorate Identifier 2011–NM–229–AD.

(a) Comments Due Date

We must receive comments by July 5, 2012.

(b) Affected ADs

None.

(c) Applicability

This AD applies to BAE SYSTEMS (Operations) Limited Model 4101 airplanes, certificated in any category, all serial numbers.

(d) Subject

Air Transport Association (ATA) of America Code 26, Fire Protection.

(e) Reason

This AD was prompted by reports that the fire extinguisher of the toilet vanity unit needs to be mounted vertically, rather than horizontally. We are issuing this AD to detect and correct the orientation of the fire extinguisher bottle in the toilet vanity unit to the vertical position, which if not corrected, could result in a toilet waste bin fire spreading, and consequent damage to the airplane and injury to its occupants.

(f) Compliance

You are responsible for having the actions required by this AD performed within the compliance times specified, unless the actions have already been done.

(g) Actions

Within 2 months after the effective date of this AD, determine from the table specified in paragraph 2.A.(1) of BAE SYSTEMS (Operations) Limited Service Bulletin J41–26–008, Revision 2, dated September 20, 2011, if fire extinguisher bottle part number (P/N) BA20509AM–4 is fitted to the airplane. If a fire extinguisher bottle P/N BA20509AM–4 is fitted, before further flight, reposition the fire extinguisher bottle, in accordance with the Accomplishment Instructions of BAE SYSTEMS (Operations) Limited Service Bulletin J41–26–008, Revision 2, dated September 20, 2011.

(h) Credit for Previous Actions

This paragraph provides credit for the actions required by paragraph (g) of this AD, if those actions were performed before the effective date of this AD using BAE SYSTEMS (Operations) Limited Service Bulletin J41–26–008, dated October 5, 2010; or BAE SYSTEMS (Operations) Limited Service Bulletin J41–26–008, Revision 1, dated April 12, 2011.

(i) Other FAA AD Provisions

The following provisions also apply to this AD:

(1) *Alternative Methods of Compliance (AMOCs):* The Manager, International Branch, ANM–116, Transport Airplane Directorate, FAA, has the authority to approve AMOCs for this AD, if requested using the procedures found in 14 CFR 39.19. In accordance with 14 CFR 39.19, send your request to your principal inspector or local Flight Standards District Office, as appropriate. If sending information directly to the International Branch, send it to ATTN: Todd Thompson, Aerospace Engineer, International Branch, ANM–116, Transport Airplane Directorate, FAA, 1601 Lind Avenue SW., Renton, Washington 98057–3356; phone 425–227–1175; fax 425–227–1149. Information may be emailed to: *9-ANM-116-AMOC-REQUESTS@faa.gov.* Before using any approved AMOC, notify your appropriate principal inspector, or lacking a principal inspector, the manager of the local flight standards district office/certificate holding district office. The AMOC approval letter must specifically reference this AD.

(2) *Airworthy Product:* For any requirement in this AD to obtain corrective actions from a manufacturer or other source, use these actions if they are FAA-approved. Corrective actions are considered FAA-approved if they are approved by the State of Design Authority (or their delegated agent). You are required to assure the product is airworthy before it is returned to service.

(j) Related Information

Refer to MCAI EASA Airworthiness Directive 2011–0194, dated October 6, 2011; and BAE SYSTEMS (Operations) Limited Service Bulletin J41–26–008, Revision 2, dated September 20, 2011; for related information.

Issued in Renton, Washington, on May 11, 2012.

Michael Kaszycki,

Acting Manager, Transport Airplane Directorate, Aircraft Certification Service.

[FR Doc. 2012–12288 Filed 5–18–12; 8:45 am]

BILLING CODE 4910–13–P

DEPARTMENT OF TRANSPORTATION

Federal Aviation Administration

14 CFR Part 71

[Docket No. FAA–2012–0392; Airspace Docket No. 12–AGL–3]

Proposed Amendment of Class D Airspace; Sault Ste Marie, ON

AGENCY: Federal Aviation Administration (FAA), DOT.

ACTION: Notice of proposed rulemaking (NPRM).

SUMMARY: This action proposes to amend Class D airspace at Sault Ste Marie, ON. Additional controlled airspace is necessary to coincide with the Canadian control zone over Sault Ste Marie Airport. The FAA is taking this action to enhance the safety and management of Instrument Flight Rules (IFR) operations at the airport.

DATES: 0901 UTC. Comments must be received on or before July 5, 2012.

ADDRESSES: Send comments on this proposal to the U.S. Department of Transportation, Docket Operations, 1200 New Jersey Avenue SE., West Building Ground Floor, Room W12–140, Washington, DC 20590–0001. You must identify the docket number FAA–2012–0392/Airspace Docket No. 12–AGL–3, at the beginning of your comments. You may also submit comments through the Internet at *http://www.regulations.gov*. You may review the public docket containing the proposal, any comments received, and any final disposition in person in the Dockets Office between 9 a.m. and 5 p.m., Monday through Friday, except Federal holidays. The Docket Office (telephone 1–800–647–5527), is on the ground floor of the building at the above address.

FOR FURTHER INFORMATION CONTACT: Scott Enander, Central Service Center, Operations Support Group, Federal Aviation Administration, Southwest Region, 2601 Meacham Blvd., Fort Worth, TX 76137; telephone: 817–321–7716.

SUPPLEMENTARY INFORMATION:

Comments Invited

Interested parties are invited to participate in this proposed rulemaking by submitting such written data, views, or arguments, as they may desire. Comments that provide the factual basis supporting the views and suggestions presented are particularly helpful in developing reasoned regulatory decisions on the proposal. Comments are specifically invited on the overall regulatory, aeronautical, economic, environmental, and energy-related aspects of the proposal. Communications should identify both docket numbers and be submitted in triplicate to the address listed above. Commenters wishing the FAA to acknowledge receipt of their comments on this notice must submit with those comments a self-addressed, stamped postcard on which the following statement is made: ''Comments to Docket No. FAA–2012–0392/Airspace Docket No. 12–AGL–3.'' The postcard

will be date/time stamped and returned to the commenter.

Availability of NPRMs

An electronic copy of this document may be downloaded through the Internet at *http://www.regulations.gov.* Recently published rulemaking documents can also be accessed through the FAA's Web page at *http://www.faa.gov/airports_airtraffic/air_traffic/publications/airspace_amendments/.*

You may review the public docket containing the proposal, any comments received and any final disposition in person in the Dockets Office (see **ADDRESSES** section for address and phone number) between 9 a.m. and 5 p.m., Monday through Friday, except Federal holidays. An informal docket may also be examined during normal business hours at the office of the Central Service Center, 2601 Meacham Blvd., Fort Worth, TX 76137.

Persons interested in being placed on a mailing list for future NPRMs should contact the FAA's Office of Rulemaking 202–267–9677, to request a copy of Advisory Circular No. 11–2A, Notice of Proposed Rulemaking Distribution System, which describes the application procedure.

The Proposal

This action proposes to amend Title 14, Code of Federal Regulations (14 CFR), Part 71 by amending Class D airspace at Sault Ste Marie Airport, Sault Ste Marie, ON, creating additional controlled airspace to coincide with that portion of the control zone in Canadian airspace. Controlled airspace is needed for the safety and management of IFR operations at the airport.

Class D airspace areas are published in Paragraph 5000 of FAA Order 7400.9V, dated August 9, 2011 and effective September 15, 2011, which is incorporated by reference in 14 CFR 71.1. The Class E airspace designation listed in this document would be published subsequently in the Order.

The FAA has determined that this proposed regulation only involves an established body of technical regulations for which frequent and routine amendments are necessary to keep them operationally current. It, therefore, (1) Is not a ''significant regulatory action'' under Executive Order 12866; (2) is not a ''significant rule'' under DOT Regulatory Policies and Procedures (44 FR 11034; February 26, 1979); and (3) does not warrant preparation of a Regulatory Evaluation as the anticipated impact is so minimal. Since this is a routine matter that will only affect air traffic procedures and air navigation, it is certified that this rule, when promulgated, will not have a significant economic impact on a substantial number of small entities under the criteria of the Regulatory Flexibility Act.

The FAA's authority to issue rules regarding aviation safety is found in Title 49 of the U.S. Code. Subtitle 1, Section 106 describes the authority of the FAA Administrator. Subtitle VII, Aviation Programs, describes in more detail the scope of the agency's authority. This rulemaking is promulgated under the authority described in Subtitle VII, Part A, Subpart I, Section 40103. Under that section, the FAA is charged with prescribing regulations to assign the use of airspace necessary to ensure the safety of aircraft and the efficient use of airspace. This regulation is within the scope of that authority as it would amend controlled airspace at Sault Ste Marie Airport, Sault Ste Marie, ON.

Environmental Review

This proposal will be subject to an environmental analysis in accordance with FAA Order 1050.1E, ''Environmental Impacts: Policies and Procedures'' prior to any FAA final regulatory action.

List of Subjects in 14 CFR Part 71

Airspace, Incorporation by reference, Navigation (air).

The Proposed Amendment

In consideration of the foregoing, the Federal Aviation Administration proposes to amend 14 CFR part 71 as follows:

PART 71—DESIGNATION OF CLASS A, B, C, D, AND E AIRSPACE AREAS; AIR TRAFFIC SERVICE ROUTES; AND REPORTING POINTS

1. The authority citation for part 71 continues to read as follows:

Authority: 49 U.S.C. 106(g); 40103, 40113, 40120; E.O. 10854, 24 FR 9565, 3 CFR, 1959–1963 Comp., p. 389.

§ 71.1 [Amended]

2. The incorporation by reference in 14 CFR 71.1 of FAA Order 7400.9V, Airspace Designations and Reporting Points, dated August 9, 2011, and effective September 15, 2011, is amended as follows:

Paragraph 5000 Class D airspace.

* * * * *

AGL ON D Sault Ste Marie, ON [Amended]

Sault Ste Marie Airport, ON, Canada
(Lat. 46°29′06″ N., long. 84°30′34″ W.)

That airspace in the United States at or below 3,000 feet MSL within a 5-mile radius of Sault Ste Marie Airport.

Issued in Fort Worth, TX, on May 10, 2012.

Walter L. Tweedy,

Acting Manager, Operations Support Group, ATO Central Service Center.

[FR Doc. 2012–12162 Filed 5–18–12; 8:45 am]

BILLING CODE 4901–13–P

DEPARTMENT OF TRANSPORTATION

Federal Aviation Administration

14 CFR Part 71

[Docket No. FAA–2011–0829; Airspace Docket No. 11–ASW–9]

Proposed Amendment of Class E Airspace; Sweetwater, TX

AGENCY: Federal Aviation Administration (FAA), DOT.

ACTION: Notice of proposed rulemaking (NPRM).

SUMMARY: This action proposes to amend Class E airspace at Sweetwater, TX. Additional controlled airspace is necessary to accommodate new Standard Instrument Approach Procedures (SIAP) at Avenger Field Airport. The FAA is taking this action to enhance the safety and management of Instrument Flight Rules (IFR) operations for SIAPs at the airport. Geographic coordinates would also be updated, as well as the airport name.

DATES: 0901 UTC. Comments must be received on or before July 5, 2012.

ADDRESSES: Send comments on this proposal to the U.S. Department of Transportation, Docket Operations, 1200 New Jersey Avenue SE., West Building Ground Floor, Room W12–140, Washington, DC 20590–0001. You must identify the docket number FAA–2011–0829/Airspace Docket No. 11–ASW–9, at the beginning of your comments. You may also submit comments through the Internet at *http://www.regulations.gov.* You may review the public docket containing the proposal, any comments received, and any final disposition in person in the Dockets Office between 9 a.m. and 5 p.m., Monday through Friday, except Federal holidays. The Docket Office (telephone 1–800–647–5527), is on the ground floor of the building at the above address.

FOR FURTHER INFORMATION CONTACT: Scott Enander, Central Service Center, Operations Support Group, Federal Aviation Administration, Southwest Region, 2601 Meacham Blvd., Fort Worth, TX 76137; telephone: 817–321–7716.

SUPPLEMENTARY INFORMATION:

Comments Invited

Interested parties are invited to participate in this proposed rulemaking by submitting such written data, views, or arguments, as they may desire. Comments that provide the factual basis supporting the views and suggestions presented are particularly helpful in developing reasoned regulatory decisions on the proposal. Comments are specifically invited on the overall regulatory, aeronautical, economic, environmental, and energy-related aspects of the proposal. Communications should identify both docket numbers and be submitted in triplicate to the address listed above. Commenters wishing the FAA to acknowledge receipt of their comments on this notice must submit with those comments a self-addressed, stamped postcard on which the following statement is made: ''Comments to Docket No. FAA–2011–0829/Airspace Docket No. 11–ASW–9.'' The postcard will be date/time stamped and returned to the commenter.

Availability of NPRMs

An electronic copy of this document may be downloaded through the Internet at *http://www.regulations.gov.* Recently published rulemaking documents can also be accessed through the FAA's Web page at *http://www.faa.gov/airports_airtraffic/air_traffic/publications/airspace_amendments/.*

You may review the public docket containing the proposal, any comments received and any final disposition in person in the Dockets Office (see **ADDRESSES** section for address and phone number) between 9 a.m. and 5 p.m., Monday through Friday, except Federal holidays. An informal docket may also be examined during normal business hours at the office of the Central Service Center, 2601 Meacham Blvd., Fort Worth, TX 76137.

Persons interested in being placed on a mailing list for future NPRMs should contact the FAA's Office of Rulemaking 202–267–9677, to request a copy of Advisory Circular No. 11–2A, Notice of Proposed Rulemaking Distribution System, which describes the application procedure.

The Proposal

This action proposes to amend Title 14, Code of Federal Regulations (14 CFR), Part 71 by amending Class E airspace extending upward from 700 feet above the surface to accommodate new standard instrument approach procedures at Avenger Field Airport, Sweetwater, TX. Controlled airspace is needed for the safety and management of IFR operations at the airport. Geographic coordinates would also be updated to coincide with the FAA's aeronautical database. Also, the airport formerly called Avenger Field is amended to read Avenger Field Airport.

Class E airspace areas are published in Paragraph 6005 of FAA Order 7400.9V, dated August 9, 2011 and effective September 15, 2011, which is incorporated by reference in 14 CFR 71.1. The Class E airspace designation listed in this document would be published subsequently in the Order.

The FAA has determined that this proposed regulation only involves an established body of technical regulations for which frequent and routine amendments are necessary to keep them operationally current. It, therefore, (1) Is not a ''significant regulatory action'' under Executive Order 12866; (2) is not a ''significant rule'' under DOT Regulatory Policies and Procedures (44 FR 11034; February 26, 1979); and (3) does not warrant preparation of a Regulatory Evaluation as the anticipated impact is so minimal. Since this is a routine matter that will only affect air traffic procedures and air navigation, it is certified that this rule, when promulgated, will not have a significant economic impact on a substantial number of small entities under the criteria of the Regulatory Flexibility Act.

The FAA's authority to issue rules regarding aviation safety is found in Title 49 of the U.S. Code. Subtitle 1, Section 106 describes the authority of the FAA Administrator. Subtitle VII, Aviation Programs, describes in more detail the scope of the agency's authority. This rulemaking is promulgated under the authority described in Subtitle VII, Part A, Subpart I, Section 40103. Under that section, the FAA is charged with prescribing regulations to assign the use of airspace necessary to ensure the safety of aircraft and the efficient use of airspace. This regulation is within the scope of that authority as it would amend controlled airspace at Avenger Field Airport, Sweetwater, TX.

Environmental Review

This proposal will be subject to an environmental analysis in accordance with FAA Order 1050.1E, ''Environmental Impacts: Policies and Procedures'' prior to any FAA final regulatory action.

List of Subjects in 14 CFR Part 71

Airspace, Incorporation by reference, Navigation (air).

The Proposed Amendment

In consideration of the foregoing, the Federal Aviation Administration proposes to amend 14 CFR part 71 as follows:

PART 71—DESIGNATION OF CLASS A, B, C, D, AND E AIRSPACE AREAS; AIR TRAFFIC SERVICE ROUTES; AND REPORTING POINTS

1. The authority citation for part 71 continues to read as follows:

Authority: 49 U.S.C. 106(g); 40103, 40113, 40120; E.O. 10854, 24 FR 9565, 3 CFR, 1959–1963 Comp., p. 389.

§ 71.1 [Amended]

2. The incorporation by reference in 14 CFR 71.1 of FAA Order 7400.9V, Airspace Designations and Reporting Points, dated August 9, 2011, and effective September 15, 2011, is amended as follows:

Paragraph 6005 Class E airspace areas extending upward from 700 feet or more above the surface of the earth.

* * * * *

ASW TX E5 Sweetwater, TX [Amended]

Sweetwater, Avenger Field Airport, TX
(Lat. 32°28′03″ N., long. 100°28′00″ W.)
Sweetwater RBN
(Lat. 32°27′42″ N., long. 100°27′56″ W.)

That airspace extending upward from 700 feet above the surface within a 6.6-mile radius of Avenger Field Airport, and within 2.5 miles each side of the 348° bearing from the Sweetwater RBN, extending from the 6.6-mile radius to 7.4 miles north of the airport, and within 2 miles each side of the 174° bearing from the airport extending from the 6.6-mile radius to 12 miles south of the airport.

Issued in Fort Worth, TX, on May 10, 2012.

Walter L. Tweedy,

Acting Manager, Operations Support Group, ATO Central Service Center.

[FR Doc. 2012–12155 Filed 5–18–12; 8:45 am]

BILLING CODE 4910–13–P

DEPARTMENT OF TRANSPORTATION

Federal Aviation Administration

14 CFR Part 71

[Docket No. FAA–2011–1110; Airspace Docket No. 11–AGL–21]

Proposed Amendment of Class E Airspace; Battle Creek, MI

AGENCY: Federal Aviation Administration (FAA), DOT.

ACTION: Notice of proposed rulemaking (NPRM).

SUMMARY: This action proposes to amend Class E airspace at Battle Creek,

MI. Additional controlled airspace is necessary to accommodate new Standard Instrument Approach Procedures (SIAP) at W. K. Kellogg Airport. The FAA is taking this action to enhance the safety and management of Instrument Flight Rules (IFR) operations for SIAPs at the airport. Geographic coordinates of the airport would also be updated.

DATES: 0901 UTC. Comments must be received on or before July 5, 2012.

ADDRESSES: Send comments on this proposal to the U.S. Department of Transportation, Docket Operations, 1200 New Jersey Avenue SE., West Building Ground Floor, Room W12–140, Washington, DC 20590–0001. You must identify the docket number FAA–2011–1110/Airspace Docket No. 11–AGL–21, at the beginning of your comments. You may also submit comments through the Internet at *http://www.regulations.gov.* You may review the public docket containing the proposal, any comments received, and any final disposition in person in the Dockets Office between 9 a.m. and 5 p.m., Monday through Friday, except Federal holidays. The Docket Office (telephone 1–800–647–5527), is on the ground floor of the building at the above address.

FOR FURTHER INFORMATION CONTACT: Scott Enander, Central Service Center, Operations Support Group, Federal Aviation Administration, Southwest Region, 2601 Meacham Blvd., Fort Worth, TX 76137; telephone: 817–321–7716.

SUPPLEMENTARY INFORMATION:

Comments Invited

Interested parties are invited to participate in this proposed rulemaking by submitting such written data, views, or arguments, as they may desire. Comments that provide the factual basis supporting the views and suggestions presented are particularly helpful in developing reasoned regulatory decisions on the proposal. Comments are specifically invited on the overall regulatory, aeronautical, economic, environmental, and energy-related aspects of the proposal. Communications should identify both docket numbers and be submitted in triplicate to the address listed above. Commenters wishing the FAA to acknowledge receipt of their comments on this notice must submit with those comments a self-addressed, stamped postcard on which the following statement is made: ''Comments to Docket No. FAA–2011–1110/Airspace Docket No. 11–AGL–21.'' The postcard will be date/time stamped and returned to the commenter.

Availability of NPRMs

An electronic copy of this document may be downloaded through the Internet at *http://www.regulations.gov.* Recently published rulemaking documents can also be accessed through the FAA's Web page at *http://www.faa.gov/airports_airtraffic/air_traffic/publications/airspace_amendments/.*

You may review the public docket containing the proposal, any comments received and any final disposition in person in the Dockets Office (see **ADDRESSES** section for address and phone number) between 9 a.m. and 5 p.m., Monday through Friday, except Federal holidays. An informal docket may also be examined during normal business hours at the office of the Central Service Center, 2601 Meacham Blvd., Fort Worth, TX 76137.

Persons interested in being placed on a mailing list for future NPRMs should contact the FAA's Office of Rulemaking 202–267–9677, to request a copy of Advisory Circular No. 11–2A, Notice of Proposed Rulemaking Distribution System, which describes the application procedure.

The Proposal

This action proposes to amend Title 14, Code of Federal Regulations (14 CFR), Part 71 by amending Class E airspace extending upward from 700 feet above the surface to accommodate new standard instrument approach procedures at W.K. Kellogg Airport, Battle Creek, MI. Controlled airspace is needed for the safety and management of IFR operations at the airport. The airport's geographic coordinates also would be updated to coincide with the FAA's aeronautical database.

Class E airspace areas are published in Paragraph 6005 of FAA Order 7400.9V, dated August 9, 2011 and effective September 15, 2011, which is incorporated by reference in 14 CFR 71.1. The Class E airspace designation listed in this document would be published subsequently in the Order.

The FAA has determined that this proposed regulation only involves an established body of technical regulations for which frequent and routine amendments are necessary to keep them operationally current. It, therefore, (1) Is not a ''significant regulatory action'' under Executive Order 12866; (2) is not a ''significant rule'' under DOT Regulatory Policies and Procedures (44 FR 11034; February 26, 1979); and (3) does not warrant preparation of a Regulatory Evaluation as the anticipated impact is so minimal. Since this is a routine matter that will only affect air traffic procedures and air navigation, it is certified that this rule, when promulgated, will not have a significant economic impact on a substantial number of small entities under the criteria of the Regulatory Flexibility Act.

The FAA's authority to issue rules regarding aviation safety is found in Title 49 of the U.S. Code. Subtitle 1, Section 106 describes the authority of the FAA Administrator. Subtitle VII, Aviation Programs, describes in more detail the scope of the agency's authority. This rulemaking is promulgated under the authority described in Subtitle VII, Part A, Subpart I, Section 40103. Under that section, the FAA is charged with prescribing regulations to assign the use of airspace necessary to ensure the safety of aircraft and the efficient use of airspace. This regulation is within the scope of that authority as it would amend controlled airspace at W.K. Kellogg Airport, Battle Creek, MI.

Environmental Review

This proposal will be subject to an environmental analysis in accordance with FAA Order 1050.1E, ''Environmental Impacts: Policies and Procedures'' prior to any FAA final regulatory action.

List of Subjects in 14 CFR Part 71

Airspace, Incorporation by reference, Navigation (air).

The Proposed Amendment

In consideration of the foregoing, the Federal Aviation Administration proposes to amend 14 CFR part 71 as follows:

PART 71—DESIGNATION OF CLASS A, B, C, D, AND E AIRSPACE AREAS; AIR TRAFFIC SERVICE ROUTES; AND REPORTING POINTS

1. The authority citation for part 71 continues to read as follows:

Authority: 49 U.S.C. 106(g); 40103, 40113, 40120; E.O. 10854, 24 FR 9565, 3 CFR, 1959–1963 Comp., p. 389.

§ 71.1 [Amended]

2. The incorporation by reference in 14 CFR 71.1 of FAA Order 7400.9V, Airspace Designations and Reporting Points, dated August 9, 2011, and effective September 15, 2011, is amended as follows:

Paragraph 6005 Class E airspace areas extending upward from 700 feet or more above the surface of the earth.

* * * * *

AGL MI E5 Battle Creek, MI [Amended]

Battle Creek, W.K. Kellogg Airport, IL
(Lat. 42°18′23″ N., long. 85°15′00″ W.)

BATOL LOM/NDB
(Lat. 42°21′43″ N., long. 85°11′04″ W.)

That airspace extending upward from 700 feet above the surface within a 7-mile radius of W. K. Kellogg Airport, and within 4 miles each side of the 222° bearing from the airport extending from the 7-mile radius to 11.7 miles southwest of the airport, and within 4 miles each side of the 049° bearing from the airport extending from the 7-mile radius to 10.9 miles northeast of the airport, and within 2 miles each side of the 126° bearing from the airport extending from the 7-mile radius to 11.1 miles southeast of the airport, and within 7 miles northwest and 4.4 miles southeast of the Battle Creek ILS localizer northeast course extending from the 7-mile radius to 10.4 miles northeast of the BATOL LOM/NDB.

Issued in Fort Worth, TX, on May 10, 2012.

Walter L. Tweedy,

Acting Manager, Operations Support Group, ATO Central Service Center.

[FR Doc. 2012–12157 Filed 5–18–12; 8:45 am]

BILLING CODE 4910–13–P

DEPARTMENT OF TRANSPORTATION

Federal Aviation Administration

14 CFR Part 71

[Docket No. FAA–2012–0391; Airspace Docket No. 12–AGL–2]

Proposed Amendment of Class E Airspace; Lemmon, SD

AGENCY: Federal Aviation Administration (FAA), DOT.

ACTION: Notice of proposed rulemaking (NPRM).

SUMMARY: This action proposes to amend Class E airspace at Lemmon, SD. Additional controlled airspace is necessary to accommodate new Standard Instrument Approach Procedures (SIAP) at Lemmon Municipal Airport. The FAA is taking this action to enhance the safety and management of Instrument Flight Rules (IFR) operations for SIAPs at the airport. Geographic coordinates of the airport also would be updated.

DATES: 0901 UTC. Comments must be received on or before July 5, 2012.

ADDRESSES: Send comments on this proposal to the U.S. Department of Transportation, Docket Operations, 1200 New Jersey Avenue SE., West Building Ground Floor, Room W12–140, Washington, DC 20590–0001. You must identify the docket number FAA–2012–0391/Airspace Docket No. 12–AGL–2, at the beginning of your comments. You may also submit comments through the Internet at *http://www.regulations.gov.* You may review the public docket containing the proposal, any comments received, and any final disposition in person in the Dockets Office between 9 a.m. and 5 p.m., Monday through Friday, except Federal holidays. The Docket Office (telephone 1–800–647–5527), is on the ground floor of the building at the above address.

FOR FURTHER INFORMATION CONTACT: Scott Enander, Central Service Center, Operations Support Group, Federal Aviation Administration, Southwest Region, 2601 Meacham Blvd., Fort Worth, TX 76137; telephone: 817–321–7716.

SUPPLEMENTARY INFORMATION:

Comments Invited

Interested parties are invited to participate in this proposed rulemaking by submitting such written data, views, or arguments, as they may desire. Comments that provide the factual basis supporting the views and suggestions presented are particularly helpful in developing reasoned regulatory decisions on the proposal. Comments are specifically invited on the overall regulatory, aeronautical, economic, environmental, and energy-related aspects of the proposal. Communications should identify both docket numbers and be submitted in triplicate to the address listed above. Commenters wishing the FAA to acknowledge receipt of their comments on this notice must submit with those comments a self-addressed, stamped postcard on which the following statement is made: ''Comments to Docket No. FAA–2012–0391/Airspace Docket No. 12–AGL–2.'' The postcard will be date/time stamped and returned to the commenter.

Availability of NPRMs

An electronic copy of this document may be downloaded through the Internet at *http://www.regulations.gov.* Recently published rulemaking documents can also be accessed through the FAA's Web page at *http://www.faa.gov/airports_airtraffic/air_traffic/publications/airspace_amendments/.*

You may review the public docket containing the proposal, any comments received and any final disposition in person in the Dockets Office (see **ADDRESSES** section for address and phone number) between 9 a.m. and 5 p.m., Monday through Friday, except Federal holidays. An informal docket may also be examined during normal business hours at the office of the Central Service Center, 2601 Meacham Blvd., Fort Worth, TX 76137.

Persons interested in being placed on a mailing list for future NPRMs should contact the FAA's Office of Rulemaking 202–267–9677, to request a copy of Advisory Circular No. 11–2A, Notice of Proposed Rulemaking Distribution System, which describes the application procedure.

The Proposal

This action proposes to amend Title 14, Code of Federal Regulations (14 CFR), Part 71 by amending Class E airspace extending upward from 700 feet above the surface to accommodate new standard instrument approach procedures at Lemmon Municipal Airport, Lemmon, SD. Controlled airspace is needed for the safety and management of IFR operations at the airport. The airport's geographic coordinates also would be updated to coincide with the FAA's aeronautical database.

Class E airspace areas are published in Paragraph 6005 of FAA Order 7400.9V, dated August 9, 2011 and effective September 15, 2011, which is incorporated by reference in 14 CFR 71.1. The Class E airspace designation listed in this document would be published subsequently in the Order.

The FAA has determined that this proposed regulation only involves an established body of technical regulations for which frequent and routine amendments are necessary to keep them operationally current. It, therefore, (1) Is not a ''significant regulatory action'' under Executive Order 12866; (2) is not a ''significant rule'' under DOT Regulatory Policies and Procedures (44 FR 11034; February 26, 1979); and (3) does not warrant preparation of a Regulatory Evaluation as the anticipated impact is so minimal. Since this is a routine matter that will only affect air traffic procedures and air navigation, it is certified that this rule, when promulgated, will not have a significant economic impact on a substantial number of small entities under the criteria of the Regulatory Flexibility Act.

The FAA's authority to issue rules regarding aviation safety is found in Title 49 of the U.S. Code. Subtitle 1, Section 106 describes the authority of the FAA Administrator. Subtitle VII, Aviation Programs, describes in more detail the scope of the agency's authority. This rulemaking is promulgated under the authority described in Subtitle VII, Part A, Subpart I, Section 40103. Under that section, the FAA is charged with prescribing regulations to assign the use of airspace necessary to ensure the safety of aircraft and the efficient use of airspace. This regulation is within the scope of that authority as it would

amend controlled airspace at Lemmon Municipal Airport, Lemmon, SD.

Environmental Review

This proposal will be subject to an environmental analysis in accordance with FAA Order 1050.1E, ''Environmental Impacts: Policies and Procedures'' prior to any FAA final regulatory action.

List of Subjects in 14 CFR Part 71

Airspace, Incorporation by reference, Navigation (air).

The Proposed Amendment

In consideration of the foregoing, the Federal Aviation Administration proposes to amend 14 CFR part 71 as follows:

PART 71—DESIGNATION OF CLASS A, B, C, D, AND E AIRSPACE AREAS; AIR TRAFFIC SERVICE ROUTES; AND REPORTING POINTS

1. The authority citation for part 71 continues to read as follows:

Authority: 49 U.S.C. 106(g); 40103, 40113, 40120; E.O. 10854, 24 FR 9565, 3 CFR, 1959–1963 Comp., p. 389.

§ 71.1 [Amended]

2. The incorporation by reference in 14 CFR 71.1 of FAA Order 7400.9V, Airspace Designations and Reporting Points, dated August 9, 2011, and effective September 15, 2011, is amended as follows:

Paragraph 6005 Class E airspace areas extending upward from 700 feet or more above the surface of the earth.

* * * * *

AGL SD E5 Lemmon, SD [Amended]

Lemmon Municipal Airport, SD
(Lat. 45°55′06″ N., long. 102°06′20″ W.)

That airspace extending upward from 700 feet above the surface within a 6.4-mile radius of Lemmon Municipal Airport; and that airspace extending upward from 1,200 feet above the surface bounded on the north by lat. 46°10′00″ N, on the east by V–169, on the south by lat. 45°33′00″ N, and on the west by V–491, northbound to lat. 45°45′00″, thence eastbound to lat. 45°45′00″ N, long. 102°09′00″ W, thence northwest bound to lat. 46°10′00″ N, long. 102°34′00″ W, and within a 30 mile radius of lat. 45°47′29″ N, long. 101°51′13″ W.

Issued in Fort Worth, TX, on May 10, 2012.

Walter L. Tweedy,

Acting Manager, Operations Support Group, ATO Central Service Center.

[FR Doc. 2012–12159 Filed 5–18–12; 8:45 am]

BILLING CODE 4910–13–P

DEPARTMENT OF TRANSPORTATION

Federal Aviation Administration

14 CFR Part 71

[Docket No. FAA–2011–1399; Airspace Docket No. 11–ASW–14]

Proposed Amendment of Class E Airspace; Kerrville, TX

AGENCY: Federal Aviation Administration (FAA), DOT.

ACTION: Notice of proposed rulemaking (NPRM).

SUMMARY: This action proposes to amend Class E airspace at Kerrville, TX. Additional controlled airspace is necessary to accommodate new Standard Instrument Approach Procedures (SIAP) at Kerrville Municipal Airport/Louis Schreiner Field. The airport's geographic coordinates would also be adjusted. The FAA is taking this action to enhance the safety and management of Instrument Flight Rules (IFR) operations for SIAPs at the airport

DATES: 0901 UTC. Comments must be received on or before July 5, 2012.

ADDRESSES: Send comments on this proposal to the U.S. Department of Transportation, Docket Operations, 1200 New Jersey Avenue SE., West Building Ground Floor, Room W12–140, Washington, DC 20590–0001. You must identify the docket number FAA–2011–1399/Airspace Docket No. 11–ASW–14, at the beginning of your comments. You may also submit comments through the Internet at *http://www.regulations.gov.* You may review the public docket containing the proposal, any comments received, and any final disposition in person in the Dockets Office between 9 a.m. and 5 p.m., Monday through Friday, except Federal holidays. The Docket Office (telephone 1–800–647–5527), is on the ground floor of the building at the above address.

FOR FURTHER INFORMATION CONTACT: Scott Enander, Central Service Center, Operations Support Group, Federal Aviation Administration, Southwest Region, 2601 Meacham Blvd., Fort Worth, TX 76137; telephone: 817 321–7716.

SUPPLEMENTARY INFORMATION:

Comments Invited

Interested parties are invited to participate in this proposed rulemaking by submitting such written data, views, or arguments, as they may desire. Comments that provide the factual basis supporting the views and suggestions presented are particularly helpful in developing reasoned regulatory decisions on the proposal. Comments are specifically invited on the overall regulatory, aeronautical, economic, environmental, and energy-related aspects of the proposal. Communications should identify both docket numbers and be submitted in triplicate to the address listed above. Commenters wishing the FAA to acknowledge receipt of their comments on this notice must submit with those comments a self-addressed, stamped postcard on which the following statement is made: ''Comments to Docket No. FAA–2011–1399/Airspace Docket No. 11–ASW–14.'' The postcard will be date/time stamped and returned to the commenter.

Availability of NPRMs

An electronic copy of this document may be downloaded through the Internet at http://www.regulations.gov. Recently published rulemaking documents can also be accessed through the FAA's Web page at *http://www.faa.gov/airports_airtraffic/air_traffic/publications/airspace_amendments/.*

You may review the public docket containing the proposal, any comments received and any final disposition in person in the Dockets Office (see **ADDRESSES** section for address and phone number) between 9 a.m. and 5 p.m., Monday through Friday, except Federal holidays. An informal docket may also be examined during normal business hours at the office of the Central Service Center, 2601 Meacham Blvd., Fort Worth, TX 76137.

Persons interested in being placed on a mailing list for future NPRMs should contact the FAA's Office of Rulemaking 202–267–9677, to request a copy of Advisory Circular No. 11–2A, Notice of Proposed Rulemaking Distribution System, which describes the application procedure.

The Proposal

This action proposes to amend Title 14, Code of Federal Regulations (14 CFR), Part 71 by amending Class E airspace extending upward from 700 feet above the surface to accommodate new standard instrument approach procedures at Kerrville Municipal Airport/Louis Schreiner Field, Kerrville, TX. The geographic coordinates of the airport would also be adjusted to coincide with the FAA's aeronautical database. Controlled airspace is needed for the safety and management of IFR operations at the airport.

Class E airspace areas are published in Paragraph 6005 of FAA Order 7400.9V, dated August 9, 2011 and effective September 15, 2011, which is

incorporated by reference in 14 CFR 71.1. The Class E airspace designation listed in this document would be published subsequently in the Order.

The FAA has determined that this proposed regulation only involves an established body of technical regulations for which frequent and routine amendments are necessary to keep them operationally current. It, therefore, (1) Is not a ''significant regulatory action'' under Executive Order 12866; (2) is not a ''significant rule'' under DOT Regulatory Policies and Procedures (44 FR 11034; February 26, 1979); and (3) does not warrant preparation of a Regulatory Evaluation as the anticipated impact is so minimal. Since this is a routine matter that will only affect air traffic procedures and air navigation, it is certified that this rule, when promulgated, will not have a significant economic impact on a substantial number of small entities under the criteria of the Regulatory Flexibility Act.

The FAA's authority to issue rules regarding aviation safety is found in Title 49 of the U.S. Code. Subtitle 1, Section 106 describes the authority of the FAA Administrator. Subtitle VII, Aviation Programs, describes in more detail the scope of the agency's authority. This rulemaking is promulgated under the authority described in Subtitle VII, Part A, Subpart I, Section 40103. Under that section, the FAA is charged with prescribing regulations to assign the use of airspace necessary to ensure the safety of aircraft and the efficient use of airspace. This regulation is within the scope of that authority as it would amend controlled airspace at Kerrville Municipal Airport/Louis Schreiner Field, Kerrville, TX.

Environmental Review

This proposal will be subject to an environmental analysis in accordance with FAA Order 1050.1E, ''Environmental Impacts: Policies and Procedures'' prior to any FAA final regulatory action.

List of Subjects in 14 CFR Part 71

Airspace, Incorporation by reference, Navigation (air).

The Proposed Amendment

In consideration of the foregoing, the Federal Aviation Administration proposes to amend 14 CFR part 71 as follows:

PART 71—DESIGNATION OF CLASS A, B, C, D, AND E AIRSPACE AREAS; AIR TRAFFIC SERVICE ROUTES; AND REPORTING POINTS

1. The authority citation for part 71 continues to read as follows:

Authority: 49 U.S.C. 106(g); 40103, 40113, 40120; E.O. 10854, 24 FR 9565, 3 CFR, 1959–1963 Comp., p. 389.

§ 71.1 [Amended]

2. The incorporation by reference in 14 CFR 71.1 of FAA Order 7400.9V, Airspace Designations and Reporting Points, dated August 9, 2011, and effective September 15, 2011, is amended as follows:

Paragraph 6005 Class E airspace areas extending upward from 700 feet or more above the surface of the earth.

* * * * *

ASW TX E5 Kerrville, TX [Amended]

Kerrville Municipal Airport/Louis Schreiner Field, TX
(Lat. 29°58′36″ N., long. 99°05′08″ W.)
Shein LOM/NDB
(Lat. 29°54′54″ N., long. 99°00′29″ W.)

That airspace extending upward from 700 feet above the surface within a 7.6-mile radius of Kerrville Municipal Airport/Louis Schreiner Field, and within 2 miles each side of the 310° bearing from the airport extending from the 7.6-mile radius to 12.3 miles northwest of the airport, and within 2.2 miles each side of the 131° bearing from the Shein LOM/NDB extending from the 7.6-mile radius to 11.6 miles southeast of the airport.

Issued in Fort Worth, TX, on May 10, 2012.

Walter L. Tweedy,

Acting Manager, Acting Manager, Operations Support Group, ATO Central Service Center.

[FR Doc. 2012–12161 Filed 5–18–12; 8:45 am]

BILLING CODE 4910–13–P

FEDERAL TRADE COMMISSION

16 CFR Part 20

Guides for the Rebuilt, Reconditioned and Other Used Automobile Parts Industry, Request for Comments

AGENCY: Federal Trade Commission (FTC or Commission).

ACTION: Request for public comments.

SUMMARY: As part of the Commission's systematic review of all current FTC rules and guides, the Commission requests public comment on the costs, benefits, necessity for, and regulatory and economic impact of the FTC's ''Guides for the Rebuilt, Reconditioned and Other Used Automobile Parts Industry.''

DATES: Comments must be received on or before August 3, 2012.

ADDRESSES: Interested parties may file a comment online or on paper, by following the instructions in the Request for Comment part of the **SUPPLEMENTARY INFORMATION** section below. Write ''Used Auto Parts Guides Review, 16 CFR Part 20, Project No. P127702'' on your comment, and file your comment online at *https://ftcpublic.commentworks.com/ftc/usedautopartsguide,* by following the instructions on the web-based form. If you prefer to file your comment on paper, mail or deliver your comment to the following address: Federal Trade Commission, Office of the Secretary, Room H–113 (Annex B), 600 Pennsylvania Avenue NW., Washington, DC 20580.

FOR FURTHER INFORMATION CONTACT: Jonathan L. Kessler, Attorney, East Central Region, Federal Trade Commission, 1111 Superior Avenue, Suite 200, Cleveland, Ohio 44114, 216–263–3436.

SUPPLEMENTARY INFORMATION:

I. Background

The Used Auto Parts Guides seek to prevent unfair or deceptive acts or practices in the advertisement and sale (including installation) of previously used motor vehicle parts and assemblies of parts containing previously used parts (*e.g.,* engines and transmissions). The Commission first addressed the used automobile parts market in 1962, when it issued its Trade Practice Rules for the Rebuilt, Reconditioned and Other Used Automotive Parts Industry. In 1979 these rules were rescinded and replaced with the ''Guides for the Rebuilt, Reconditioned and Other Used Automobile Parts Industry'' (Used Auto Parts Guides or Guides). The Guides have been in place since that time, but were revised in 2002 to make minor language changes and to update the list of commonly rebuilt or reused parts and assemblies.

In their current form, the Guides apply to ''used parts and assemblies containing used parts designed for use in automobiles, trucks, motorcycles, tractors, or similar self-propelled vehicles whether or not such parts or assemblies have been reconstructed in any way'' (Industry Product or Products). 16 CFR part 20. The Guides prohibit both misrepresentations that an Industry Product is new and misrepresentations of ''the current condition, or extent of previous use, reconstruction, or repair of'' an Industry Product. 16 CFR 20.1(a). Industry Products must be clearly and conspicuously identified as such in advertisements, on packaging, and, if

the product appears new, on the product itself. Further, the Guides prohibit misrepresenting the identity of an Industry Product rebuilder. 16 CFR 20.2. The Guides describe the treatment an Industry Product must receive before it can be described as ''rebuilt'' or ''remanufactured,'' and limit use of the term ''factory rebuilt'' to Industry Products rebuilt ''at a factory generally engaged in the rebuilding of such products.'' 16 CFR 20.3.

The Used Auto Parts Guides, like other industry guides issued by the Commission, are ''administrative interpretations of laws administered by the Commission for the guidance of the public in conducting its affairs in conformity with legal requirements.'' 16 CFR 1.5. Conduct inconsistent with the Guides ''may result in corrective action by the Commission under applicable statutory provisions.'' 16 CFR 1.5.

II. Regulatory Review Program

The Commission reviews all of its rules and guides periodically. These reviews seek information about the costs, benefits, and regulatory and economic impact of each rule and guide. The information obtained assists the Commission in identifying rules and guides that should be changed or eliminated. Accordingly, this Notice requests comments addressing whether the Used Auto Parts Guides are still needed, their costs and benefits to consumers and businesses, and whether any changes are needed.

III. Request for Comments

Please provide any comments you have related to the Used Auto Parts Guides. Particularly helpful would be comments that respond to all or some of the following questions:

1. Are the Guides still needed? Why or why not?

2. What benefits do the Guides provide to consumers? What evidence do you have or know of that shows these benefits?

3. What changes, if any, should the Commission make to the Guides to increase their benefits to consumers?

a. How would the changes affect the costs and benefits of the Guides for consumers?

b. How would the changes affect the costs and benefits of the Guides for businesses, particularly small businesses?

c. What evidence do you have or know of that supports these changes?

4. What costs have the Guides imposed on consumers? What evidence do you have or know of that shows these costs?

5. What changes, if any, would reduce the costs the Guides impose on consumers?

a. How would the changes affect the costs and benefits of the Guides for consumers?

b. How would the changes affect the costs and benefits of the Guides for businesses, particularly small businesses?

c. What evidence do you have or know of that supports these changes?

6. What benefits, if any, have the Guides provided to businesses, and in particular to small businesses? What evidence do you have or know of that supports these benefits?

7. What changes, if any, should be made to the Guides to increase their benefits to businesses, particularly small businesses?

a. How would the changes affect the costs and benefits of the Guides for consumers?

b. How would the changes affect the costs and benefits of the Guides for businesses, particularly small businesses?

c. What evidence do you have or know of that supports these changes?

8. What costs, including costs of compliance, have the Guides imposed on businesses, especially small businesses? What evidence do you have or know of that supports these costs?

9. What changes, if any, should be made to the Guides to reduce the costs imposed on businesses, particularly small businesses?

a. How would the changes affect the costs and benefits of the Guides for consumers?

b. How would the changes affect the costs and benefits of the Guides for businesses, particularly small businesses?

c. What evidence do you have or know of that supports these changes?

10. What evidence, if any, has become available since 2002 concerning consumer perceptions of Industry Products (used vehicle parts and assemblies of parts, such as engines and transmissions, containing used parts)? Does this new information indicate that the Guides should be modified? If so, why does the information indicate the Guides should be modified, and how should they be modified?

11. The Guides now require that certain disclosures be clear and conspicuous. Should the Guides define ''clear and conspicuous''? Why or why not? What information should be in a definition of ''clear and conspicuous''? (For example, other Commission rules define ''clear and conspicuous'' as ''reasonably understandable and designed to call attention to the nature and significance of the information.'' 16 CFR 313.3 (Privacy of Consumer Financial Information), 16 CFR 680.3 (Affiliate Marketing)).

12. Should the Guides be changed to specify when an installer of an Industry Product (*e.g.,* mechanic or technician) must disclose the use of the Product to a consumer? If so:

a. What evidence, if any, do you have that shows that disclosure of the installation of an Industry Product is not being made to consumers at an appropriate time?

b. When should the installer disclose the use of an Industry Product? (*E.g.,* when the vehicle is left for servicing; when the consumer is told that a replacement part is needed; when the consumer retrieves the vehicle after the Industry Product has been installed.)

13. How have the Guides affected the flow of truthful information to consumers? How have the Guides affected the flow of deceptive information to consumers? What evidence do you have or know of that shows the effect of the Guides on the flow of either truthful or deceptive information to consumers?

14. What evidence is available concerning the degree of compliance with the Guides? What does this evidence indicate about whether the Guides should be kept, changed, or eliminated?

15. Are any parts of the Guides no longer needed? If so, which parts? What evidence do you have or know of that supports your views?

16. What changes, if any, should be made to the Guides to account for changes in technology or economic conditions?

a. How would the changes affect the costs and benefits of the Guides for consumers?

b. How would the changes affect the costs and benefits of the Guides for businesses, particularly small businesses?

c. What evidence do you have or know of that supports these changes?

17. What acts or practices related to Industry Products do the Guides currently not address, but which they should address? What evidence do you have or know of that supports your views?

18. Is there a need for efforts to educate consumers or businesses about the Used Auto Parts Guides? If so, what types of educational activities should the Commission undertake?

19. The current Guides expressly exclude tires because when the Guides were last amended the Commission had separate guides relating to the advertising and selling of tires. These

tire guides have since been eliminated. Should the Used Auto Parts Guides be changed to include tires? Why or why not? What evidence do you have or know of that supports your views?

20. The current Guides state that they apply to Industry Products ''designed for use in automobiles, trucks, motorcycles, tractors, or similar self-propelled vehicles.'' 16 CFR 20.0. Is this list adequate to describe the vehicles to which the Guides should apply, or should other vehicles be expressly mentioned? (*E.g.,* all-terrain vehicles, off-road construction vehicles, dune buggies or other off-road recreation vehicles.) If so, which other vehicles should be mentioned, and why? What evidence do you have or know of that supports your views?

21. Do the Used Auto Parts Guides overlap or conflict with other laws or regulations, whether federal, state, or local? If so, how?

a. What evidence do you have or know of concerning the conflicts?

b. Should the Guides be changed because of these conflicts? If so, how?

c. Have the Guides helped make the advertising and selling of Industry Products more consistent across the country? If so, how?

22. Are there foreign or international laws, regulations, or standards concerning the advertising and sale of Industry Products that the Commission should consider as it reviews the Guides? If so, what are they?

a. Should the Guides be changed to harmonize with these foreign or international laws, regulations, or standards? Why or why not?

b. How would harmonization affect the costs and benefits of the Guides for consumers?

c. How would harmonization affect the costs and benefits of the Guides for businesses, particularly small businesses?

IV. Instructions for Comment Submissions

You can file a comment online or on paper. For the Commission to consider your comment, we must receive it on or before August 3, 2012. Write ''Used Auto Parts Guides Review, 16 CFR Part 20, Matter No. P12–7702'' on your comment. Your comment B including your name and your state B will be placed on the public record of this proceeding, including, to the extent practicable, on the public Commission Web site, at *http://www.ftc.gov/os/publiccomments.shtm.* As a matter of discretion, the Commission tries to remove individuals' home contact information from comments before placing them on the Commission Web site.

Because your comment will be made public, you are solely responsible for making sure that your comment does not include any sensitive personal information, such as a Social Security number, date of birth, driver's license number or other state identification number or foreign country equivalent, passport number, financial account number, or credit or debit card number. You are also solely responsible for making sure that your comment does not include any sensitive health information, like medical records or other individually identifiable health information. In addition, do not include any ''[t]rade secret or any commercial or financial information which is obtained from any person and which is privileged or confidential,'' as provided in Section 6(f) of the FTC Act, 15 U.S.C. 46(f), and FTC Rule 4.10(a)(2), 16 CFR 4.10(a)(2). In particular, do not include competitively sensitive information such as costs, sales statistics, inventories, formulas, patterns, devices, manufacturing processes, or customer names.

If you want the Commission to give your comment confidential treatment, you must file it in paper form, with a request for confidential treatment, and you have to follow the procedure explained in FTC Rule 4.9(c). 16 CFR 4.9(c).[1] Your comment will be kept confidential only if the FTC General Counsel, in his or her sole discretion, grants your request in accordance with the law and the public interest.

Postal mail addressed to the Commission is subject to delay due to heightened security screening. As a result, we encourage you to submit your comments online. To make sure that the Commission considers your online comment, you must file it at *https://ftcpublic.commentworks.com/ftc/usedautopartsguide,* by following the instructions on the web-based form. If this Notice appears at *http://www.regulations.gov/#!home,* you also may file a comment through that Web site.

If you file your comment on paper, write ''Used Auto Parts Guides Review, 16 CFR Part 20, Matter No. P127702'' on your comment and on the envelope, and mail or deliver it to the following address: Federal Trade Commission, Office of the Secretary, Room H–113 (Annex B), 600 Pennsylvania Avenue NW., Washington, DC 20580. If possible, submit your paper comment to the Commission by courier or overnight service.

Visit the Commission Web site at *http://www.ftc.gov* to read this Notice and the news release describing it. The FTC Act and other laws that the Commission administers permit the collection of public comments to consider and use in this proceeding as appropriate. The Commission will consider all timely and responsive public comments that it receives on or before August 3, 2012. You can find more information, including routine uses permitted by the Privacy Act, in the Commission's privacy policy, at *http://www.ftc.gov/ftc/privacy.htm.*

[1] In particular, the written request for confidential treatment that accompanies the comment must include the factual and legal basis for the request, and must identify the specific portions of the comment to be withheld from the public record. *See* FTC Rule 4.9(c), 16 CFR 4.9(c).

List of Subjects in 16 CFR Part 20

Advertising, Motor vehicles, Trade Practices.

Authority: 15 U.S.C. 41–58.

By direction of the Commission.

Donald S. Clark,

Secretary.

[FR Doc. 2012–12132 Filed 5–18–12; 8:45 am]

BILLING CODE 6750–01–P

DEPARTMENT OF HOMELAND SECURITY

Coast Guard

33 CFR Part 117

[Docket No. USCG–2012–0181]

RIN 1625–AA09

Drawbridge Operation Regulation; Alabama River, AL

AGENCY: Coast Guard, DHS.

ACTION: Notice of proposed rulemaking.

SUMMARY: The Coast Guard proposes to modify the operating schedule that governs the Meridian and Bigbee Railroad (MNBR) swing span bridge across the Alabama River at Selma, Dallas County, Alabama. Due to the infrequent requirement to open the bridge for the passage of vessels, the owner has requested a change allowing the bridge to open only on signal if at least 24-hours advanced notification is given.

DATES: Comments and related material must reach the Coast Guard on or before July 20, 2012.

ADDRESSES: You may submit comments identified by docket number USCG–2012–0181 using any one of the following methods:

(1) *Federal eRulemaking Portal: http://www.regulations.gov.*

(2) *Fax:* 202–493–2251.

(3) *Mail:* Docket Management Facility (M–30), U.S. Department of Transportation, West Building Ground Floor, Room W12–140, 1200 New Jersey Avenue SE., Washington, DC 20590–0001.

(4) *Hand delivery:* Same as mail address above, between 9 a.m. and 5 p.m., Monday through Friday, except Federal holidays. The telephone number is 202–366–9329.

To avoid duplication, please use only one of these four methods. See the ''Public Participation and Request for Comments'' portion of the **SUPPLEMENTARY INFORMATION** section below for instructions on submitting comments.

FOR FURTHER INFORMATION CONTACT: If you have questions on this proposed rule, call or email David Frank, Bridge Administration Branch; telephone 504–671–2128, email *David.m.frank@uscg.mil.* If you have questions on viewing or submitting material to the docket, call Renee V. Wright, Program Manager, Docket Operations, telephone 202–366–9826.

SUPPLEMENTARY INFORMATION:

A. Public Participation and Request for Comments

We encourage you to participate in this rulemaking by submitting comments and related materials. All comments received will be posted, without change to *http://www.regulations.gov* and will include any personal information you have provided.

1. Submitting Comments

If you submit a comment, please include the docket number for this rulemaking (USCG–2012–0181), indicate the specific section of this document to which each comment applies, and provide a reason for each suggestion or recommendation. You may submit your comments and material online (*http://www.regulations.gov*), or by fax, mail or hand delivery, but please use only one of these means. If you submit a comment online via *http://www.regulations.gov,* it will be considered received by the Coast Guard when you successfully transmit the comment. If you fax, hand deliver, or mail your comment, it will be considered as having been received by the Coast Guard when it is received at the Docket Management Facility. We recommend that you include your name and a mailing address, an email address, or a phone number in the body of your document so that we can contact you if we have questions regarding your submission.

To submit your comment online, go to *http://www.regulations.gov,* click on the ''submit a comment'' box, which will then become highlighted in blue. In the ''Document Type'' drop down menu select ''Proposed Rules'' and insert ''USCG–2012–0181'' in the ''Keyword'' box. Click ''Search'' then click on the balloon shape in the ''Actions'' column. If you submit your comments by mail or hand delivery, submit them in an unbound format, no larger than 8½ by 11 inches, suitable for copying and electronic filing. If you submit them by mail and would like to know that they reached the Facility, please enclose a stamped, self-addressed postcard or envelope. We will consider all comments and material received during the comment period and may change the rule based on your comments.

2. Viewing Comments and Documents

To view comments, as well as documents mentioned in this preamble as being available in the docket, go to *http://www.regulations.gov,* click on the ''read comments'' box, which will then become highlighted in blue. In the ''Keyword'' box insert ''USCG–2012–0181'' and click ''Search.'' Click the ''Open Docket Folder'' in the ''Actions'' column. You may also visit the Docket Management Facility in Room W12–140 on the ground floor of the Department of Transportation West Building, 1200 New Jersey Avenue SE., Washington, DC 20590, between 9 a.m. and 5 p.m., Monday through Friday, except Federal holidays. We have an agreement with the Department of Transportation to use the Docket Management Facility.

3. Privacy Act

Anyone can search the electronic form of comments received into any of our dockets by the name of the individual submitting the comment (or signing the comment, if submitted on behalf of an association, business, labor union, etc.). You may review a Privacy Act notice regarding our public dockets in the January 17, 2008, issue of the **Federal Register** (73 FR 3316).

4. Public Meeting

We do not now plan to hold a public meeting. But you may submit a request for one using one of the four methods specified under **ADDRESSES**. Please explain why a public meeting would be beneficial. If we determine that one would aid this rulemaking, we will hold one at a time and place announced by a later notice in the **Federal Register.**

For information on facilities or services for individuals with disabilities or to request special assistance at the public meeting, contact David Frank at the telephone number or email address indicated under the **FOR FURTHER INFORMATION CONTACT** section of the notice.

B. Regulatory History and Information

The Code of Federal Regulations (CFR) under 33 CFR 117.5 requires that drawbridges open on signal for vessel passage. Prior to this request to change the operating schedule of the draw, no previous requests for changes have been received. The bridge owner has initiated this request without consultation of waterway users but did consult with the USCG Bridge Administration Office in New Orleans to request guidance on how to comply with the requirements of 33 CFR 117.40.

C. Basis and Purpose

The MNBR swing span bridge crosses the Alabama River at mile 205.9, at Selma, Dallas County, Alabama. The bridge is currently maintained in the closed-to-navigation position, opening only for the passage of marine traffic. The bridge has a vertical clearance of 26 feet above ordinary high water in the closed-to-navigation position and unlimited in the open-to-navigation position. No alternate routes are available.

Due to the limited number of openings of the drawbridge, an average of one opening per year, the bridge owner requested a change to the operating schedule that would allow the bridge to open on signal if at least 24-hour advanced notification is given. Presently, the bridge opens on signal for the passage of vessels; however, three other bridges on the waterway open on signal if at least 24-hour advanced notification is given. The existing bridges are located at mile 105.3, at Coy, Alabama, and mile 277.8 and mile 293.3, both in Montgomery, Alabama.

D. Discussion of Proposed Rule

Under 33 CFR 117.5, the MNBR bridge is required to open on signal for the passage of vessels except as otherwise authorized or required. The proposed change will allow the bridge to operate in a manner similar to other movable bridges on the Alabama River, both upstream and downstream from this bridge, requiring 24-hour advanced notification to schedule a bridge opening. Under this proposed rule, the MNBR will also remain in the closed-to-navigation position unless at least 24-hour advance notice requesting an opening is given. This proposed rule is not anticipated to place an undue burden on the vessel operators as they

are already required to give at least 24-hour advanced notice for other movable bridges on the waterway.

E. Regulatory Analyses

We developed this proposed rule after considering numerous statutes and executive orders related to rulemaking. Below we summarize our analyses based on 14 of these statutes or executive orders.

1. Regulatory Planning and Review

This proposed rule is not a ''significant regulatory action'' under section 3(f) of Executive Order 12866, Regulatory Planning and Review, as supplemented by Executive Order 13563, Improving Regulation and Regulatory Review, and does not require an assessment of potential costs and benefits under section 6(a)(3) of Order 12866 or under section 1 of Executive Order 13563. The Office of Management and Budget has not reviewed it under those Orders.

We expect the economic impact of this proposed rule to be so minimal that a full Regulatory Evaluation is unnecessary. Very few vessels will be impacted. Those few vessels should be able to provide adequate advanced notification of their arrivals as is already done on this waterway for three other movable bridges located upstream and downstream of this bridge.

2. Impact on Small Entities

Under the Regulatory Flexibility Act (5 U.S.C. 601–612), we have considered the impact of this proposed rule on small entities. The Coast Guard certifies under 5 U.S.C. 605(b) that this proposed rule would not have a significant economic impact on a substantial number of small entities.

This proposed rule would affect the following entities, some of which might be small entities: The owners or operators of vessels needing to transit the Alabama River above mile 205.9. This action will not have a significant economic impact on a substantial number of small entities because these few vessels should be able to provide adequate advanced notification of their arrivals as is already done on this waterway for three other movable bridges located upstream and downstream of this bridge.

If you think that your business, organization, or governmental jurisdiction qualifies as a small entity and that this rule would have a significant economic impact on it, please submit a comment (see **ADDRESSES**) explaining why you think it qualifies and how and to what degree this rule would economically affect it.

3. Assistance for Small Entities

Under section 213(a) of the Small Business Regulatory Enforcement Fairness Act of 1996 (Pub. L. 104–121), we want to assist small entities in understanding this proposed rule so that they can better evaluate its effects on them and participate in the rulemaking. If the rule would affect your small business, organization, or governmental jurisdiction and you have questions concerning its provisions or options for compliance, please contact the person listed in the **FOR FURTHER INFORMATION CONTACT**, above. The Coast Guard will not retaliate against small entities that question or complain about this rule or any policy or action of the Coast Guard.

4. Collection of Information

This proposed rule would call for no new collection of information under the Paperwork Reduction Act of 1995 (44 U.S.C. 3501–3520.).

5. Federalism

A rule has implications for federalism under Executive Order 13132, Federalism, if it has a substantial direct effect on the States, on the relationship between the national government and the States, or on the distribution of power and responsibilities among the various levels of government. We have analyzed this proposed rule under that Order and have determined that it does not have implications for federalism.

6. Unfunded Mandates Reform Act

The Unfunded Mandates Reform Act of 1995 (2 U.S.C. 1531–1538) requires Federal agencies to assess the effects of their discretionary regulatory actions. In particular, the Act addresses actions that may result in the expenditure by a State, local, or tribal government, in the aggregate, or by the private sector of $100,000,000 (adjusted for inflation) or more in any one year. Though this proposed rule will not result in such an expenditure, we do discuss the effects of this rule elsewhere in this preamble.

7. Taking of Private Property

This proposed rule would not affect a taking of private property or otherwise have taking implications under Executive Order 12630, Governmental Actions and Interference with Constitutionally Protected Property Rights.

8. Civil Justice Reform

This proposed rule meets applicable standards in sections 3(a) and 3(b)(2) of Executive Order 12988, Civil Justice Reform, to minimize litigation, eliminate ambiguity, and reduce burden.

9. Protection of Children

We have analyzed this proposed rule under Executive Order 13045, Protection of Children from Environmental Health Risks and Safety Risks. This rule is not an economically significant rule and would not create an environmental risk to health or risk to safety that might disproportionately affect children.

10. Indian Tribal Governments

This proposed rule does not have tribal implications under Executive Order 13175, Consultation and Coordination with Indian Tribal Governments, because it would not have a substantial direct effect on one or more Indian tribes, on the relationship between the Federal Government and Indian tribes, or on the distribution of power and responsibilities between the Federal Government and Indian tribes.

11. Energy Effects

We have analyzed this proposed rule under Executive Order 13211, Actions Concerning Regulations That Significantly Affect Energy Supply, Distribution, or Use. We have determined that it is not a ''significant energy action'' under that Order because it is not a ''significant regulatory action'' under Executive Order 12866 and is not likely to have a significant adverse effect on the supply, distribution, or use of energy. The Administrator of the Office of Information and Regulatory Affairs has not designated it as a significant energy action. Therefore, it does not require a Statement of Energy Effects under Executive Order 13211.

12. Technical Standards

This proposed rule does not use technical standards. Therefore, we did not consider the use of voluntary consensus standards.

13. Environment

We have analyzed this proposed rule under Department of Homeland Security Management Directive 023–01, and Commandant Instruction M16475.lD which guides the Coast Guard in complying with the National Environmental Policy Act of 1969 (NEPA) (42 U.S.C. 4321–4370f), and have made a preliminary determination that this action is one of a category of actions which do not individually or cumulatively have a significant effect on the human environment because it simply promulgates the operating regulations or procedures for drawbridges. This rule is categorically excluded from further review under paragraph 32(e) of Figure 2–1 of the Commandant Instruction. Under figure

2–1, paragraph (32)(e), of the Instruction, an environmental analysis checklist and a categorical exclusion determination are not required for this rule. We seek any comments or information that may lead to the discovery of a significant environmental impact from this proposed rule.

List of Subjects in 33 CFR Part 117

Bridges

For the reasons discussed in the preamble, the Coast Guard proposes to amend 33 CFR part 117 as follows:

PART 117—DRAWBRIDGE OPERATION REGULATIONS

1. The authority citation for part 117 continues to read as follows:

Authority: 33 U.S.C. 499; 33 CFR 1.05–1; Department of Homeland Security Delegation No. 0170.1.

2. In § 117.101, paragraphs (b) and (c) are redesignated paragraphs (c) and (d), and a new paragraph (b) is added to read as follows:

§ 117.101 Alabama River.

* * * * *

(b) The draw of the Meridian and Bigbee Railroad (MNBR) Bridge, mile 205.9, at Selma, shall open on signal if at least 24 hours notice is given. An opening can be arranged by contacting the Meridian and Bigbee Railroad Roadmaster at 601–480–5071.

* * * * *

Dated: May 3, 2012.

Peter Troedsson,

Captain, U.S. Coast Guard, Commander, Eighth Coast Guard District, Acting.

[FR Doc. 2012–12269 Filed 5–18–12; 8:45 am]

BILLING CODE 9110–04–P

DEPARTMENT OF HOMELAND SECURITY

Coast Guard

33 CFR Part 117

[Docket No. USCG–2012–0180]

RIN 1625–AA09

Drawbridge Operation Regulation; Carlin Bayou, LA

AGENCY: Coast Guard, DHS.

ACTION: Notice of proposed rulemaking.

SUMMARY: The Coast Guard proposes to add a special operating regulation governing the Louisiana and Delta Railroad (LDRR) vertical lift bridge across Carlin Bayou in Delcambre, Iberia Parish, Louisiana. The bridge currently remains in the open-to-navigation position and only lowers for the passage of trains. This rule proposes to codify the current schedule as a special operating regulation.

DATES: Comments and related material must reach the Coast Guard on or before July 20, 2012.

ADDRESSES: You may submit comments identified by docket number USCG–2012–0180 using any one of the following methods:

(1) *Federal eRulemaking Portal: http://www.regulations.gov.*

(2) *Fax:* 202–493–2251.

(3) *Mail:* Docket Management Facility (M–30), U.S. Department of Transportation, West Building Ground Floor, Room W12–140, 1200 New Jersey Avenue SE., Washington, DC, 20590–0001.

(4) *Hand delivery:* Same as mail address above, between 9 a.m. and 5 p.m., Monday through Friday, except Federal holidays. The telephone number is 202–366–9329.

To avoid duplication, please use only one of these four methods. See the ''Public Participation and Request for Comments'' portion of the **SUPPLEMENTARY INFORMATION** section below for instructions on submitting comments.

FOR FURTHER INFORMATION CONTACT: If you have questions on this proposed rule, call or email David Frank, Bridge Administration Branch; telephone 504–671–2128, email *David.m.frank@uscg.mil.* If you have questions on viewing or submitting material to the docket, call Renee V. Wright, Program Manager, Docket Operations, telephone 202–366–9826.

SUPPLEMENTARY INFORMATION:

A. Public Participation and Request for Comments

We encourage you to participate in this rulemaking by submitting comments and related materials. All comments received will be posted, without change to *http://www.regulations.gov* and will include any personal information you have provided.

1. Submitting Comments

If you submit a comment, please include the docket number for this rulemaking (USCG–2012–0180), indicate the specific section of this document to which each comment applies, and provide a reason for each suggestion or recommendation. You may submit your comments and material online (*http://www.regulations.gov*), or by fax, mail or hand delivery, but please use only one of these means. If you submit a comment online via *http://www.regulations.gov,* it will be considered received by the Coast Guard when you successfully transmit the comment. If you fax, hand deliver, or mail your comment, it will be considered as having been received by the Coast Guard when it is received at the Docket Management Facility. We recommend that you include your name and a mailing address, an email address, or a phone number in the body of your document so that we can contact you if we have questions regarding your submission.

To submit your comment online, go to *http://www.regulations.gov,* click on the ''submit a comment'' box, which will then become highlighted in blue. In the ''Document Type'' drop down menu select ''Proposed Rules'' and insert ''USCG–2012–0180'' in the ''Keyword'' box. Click ''Search'' then click on the balloon shape in the ''Actions'' column. If you submit your comments by mail or hand delivery, submit them in an unbound format, no larger than 8½ by 11 inches, suitable for copying and electronic filing. If you submit them by mail and would like to know that they reached the Facility, please enclose a stamped, self-addressed postcard or envelope. We will consider all comments and material received during the comment period and may change the rule based on your comments.

2. Viewing Comments and Documents

To view comments, as well as documents mentioned in this preamble as being available in the docket, go to *http://www.regulations.gov,* click on the ''read comments'' box, which will then become highlighted in blue. In the ''Keyword'' box insert ''USCG–2012–0180'' and click ''Search.'' Click the ''Open Docket Folder'' in the ''Actions'' column. You may also visit the Docket Management Facility in Room W12–140 on the ground floor of the Department of Transportation West Building, 1200 New Jersey Avenue SE., Washington, DC 20590, between 9 a.m. and 5 p.m., Monday through Friday, except Federal holidays. We have an agreement with the Department of Transportation to use the Docket Management Facility.

3. Privacy Act

Anyone can search the electronic form of comments received into any of our dockets by the name of the individual submitting the comment (or signing the comment, if submitted on behalf of an association, business, labor union, etc.). You may review a Privacy Act notice regarding our public dockets in the January 17, 2008, issue of the **Federal Register** (73 FR 3316).

4. Public Meeting

We do not now plan to hold a public meeting. But you may submit a request for one using one of the four methods specified under **ADDRESSES**. Please explain why a public meeting would be beneficial. If we determine that one would aid this rulemaking, we will hold one at a time and place announced by a later notice in the **Federal Register.**

For information on facilities or services for individuals with disabilities or to request special assistance at the public meeting, contact David Frank at the telephone number or email address indicated under the **FOR FURTHER INFORMATION CONTACT** section of the notice.

B. Regulatory History and Information

The Code of Federal Regulations (CFR) under 33 CFR part 117.5 requires that drawbridges open on signal for vessel passage. Prior to this request to change the operating schedule of the draw, no previous requests for changes have been received. The bridge owner has initiated this request without consultation of waterway users but did consult with the USCG Bridge Administration Office in New Orleans to request guidance on how to comply with the requirements of 33 CFR part 117.41.

C. Basis and Purpose

The LDRR vertical lift span bridge crosses the Carlin Bayou at mile 6.4 in Delcambre, Iberia Parish, Louisiana. The bridge is currently maintained in the open-to-navigation position, closing only for the passage of rail traffic. The railroad bridge has a vertical clearance of two feet above mean high water (MHW) in the closed-to-navigation position. The adjacent highway bridge has a vertical clearance of four feet above MHW in the closed-to-navigation position.

Due to the limited number of trains using the rail line, the bridge owner proposes to maintain the bridge untended and in the fully open position for navigation, only lowering the bridge for the passage of trains as needed. Maintaining the bridge untended and in the open-to-navigation position also eliminates the need for a bridge tender. This rule proposes to codify the practice and bring it into compliance with 33 CFR part 117.41(b)(1).

D. Discussion of Proposed Rule

Under 33 CFR part 117.5, the LDRR bridge is required to open on signal for the passage of vessels except as otherwise authorized or required. The LDRR bridge is currently untended and operates under a schedule, known and understood by the local users, maintaining the bridge in the open-to-navigation position and only closing for the passage of rail traffic. That schedule is not reflected in the CFR. This rule proposes to publish the locally known operating schedule, codifying the schedule as a Special Operating Requirement under 33 CFR part 117, Subpart B. The proposed special operating schedule closing the bridge to navigation would occur as follows: when a train arrives at the bridge, the train will stop and a crewmember from the train will observe the waterway for approaching vessels. If vessels are approaching, the vessels will be allowed to pass prior to the bridge being lowered. The crewmember will also verify that the adjacent highway bridge is in the closed-to-navigation position prior to initiating the command to lower the LDRR bridge. The bridge will remain down until the train has completely passed over the bridge, then a manual raise command will be initiated.

If a vessel approaches while the bridge is in the closed position, they may request an opening by contacting the railroad at a number provided on the sign at the bridge. The railroad bridge has a vertical clearance of two feet above mean high water (MHW) in the closed-to-navigation position. The adjacent highway bridge has a vertical clearance of four feet above MHW in the closed-to-navigation position.

E. Regulatory Analyses

We developed this proposed rule after considering numerous statutes and executive orders related to rulemaking. Below we summarize our analyses based on 14 of these statutes or executive orders.

1. Regulatory Planning and Review

This proposed rule is not a ''significant regulatory action'' under section 3(f) of Executive Order 12866, Regulatory Planning and Review, as supplemented by Executive Order 13563, Improving Regulation and Regulatory Review, and does not require an assessment of potential costs and benefits under section 6(a)(3) of Order 12866 or under section 1 of Executive Order 13563. The Office of Management and Budget has not reviewed it under those Orders. We expect the economic impact of this proposed rule to be so minimal that a full Regulatory Evaluation is unnecessary. This rule proposes to codify the current operating schedule for the LDRR bridge which is already understood, known and accepted by the local bridge and waterway users. Very few vessels will be impacted as the bridge remains open at all times except to allow rail traffic to pass trains two times a day, three days a week.

2. Impact on Small Entities

Under the Regulatory Flexibility Act (5 U.S.C. 601–612), we have considered the impact of this proposed rule on small entities. The Coast Guard certifies under 5 U.S.C. 605(b) that this proposed rule would not have a significant economic impact on a substantial number of small entities.

This proposed rule would affect the following entities, some of which might be small entities: the owners or operators of vessels wishing to transit Carlin Bayou above mile 6.4. This action will not have a significant economic impact on a substantial number of small entities because the bridge remains open at all times except to allow rail traffic to pass two times a day, three days a week.

If you think that your business, organization, or governmental jurisdiction qualifies as a small entity and that this rule would have a significant economic impact on it, please submit a comment (see **ADDRESSES**) explaining why you think it qualifies and how and to what degree this rule would economically affect it.

3. Assistance for Small Entities

Under section 213(a) of the Small Business Regulatory Enforcement Fairness Act of 1996 (Pub. L. 104–121), we want to assist small entities in understanding this proposed rule so that they can better evaluate its effects on them and participate in the rulemaking. If the rule would affect your small business, organization, or governmental jurisdiction and you have questions concerning its provisions or options for compliance, please contact the person listed in the **FOR FURTHER INFORMATION CONTACT**, above. The Coast Guard will not retaliate against small entities that question or complain about this rule or any policy or action of the Coast Guard.

4. Collection of Information

This proposed rule would call for no new collection of information under the Paperwork Reduction Act of 1995 (44 U.S.C. 3501–3520.).

5. Federalism

A rule has implications for federalism under Executive Order 13132, Federalism, if it has a substantial direct effect on the States, on the relationship between the national government and the States, or on the distribution of power and responsibilities among the various levels of government. We have analyzed this proposed rule under that

Order and have determined that it does not have implications for federalism.

6. Unfunded Mandates Reform Act

The Unfunded Mandates Reform Act of 1995 (2 U.S.C. 1531–1538) requires Federal agencies to assess the effects of their discretionary regulatory actions. In particular, the Act addresses actions that may result in the expenditure by a State, local, or tribal government, in the aggregate, or by the private sector of $100,000,000 (adjusted for inflation) or more in any one year. Though this proposed rule will not result in such an expenditure, we do discuss the effects of this rule elsewhere in this preamble.

7. Taking of Private Property

This proposed rule would not affect a taking of private property or otherwise have taking implications under Executive Order 12630, Governmental Actions and Interference with Constitutionally Protected Property Rights.

8. Civil Justice Reform

This proposed rule meets applicable standards in sections 3(a) and 3(b)(2) of Executive Order 12988, Civil Justice Reform, to minimize litigation, eliminate ambiguity, and reduce burden.

9. Protection of Children

We have analyzed this proposed rule under Executive Order 13045, Protection of Children from Environmental Health Risks and Safety Risks. This rule is not an economically significant rule and would not create an environmental risk to health or risk to safety that might disproportionately affect children.

10. Indian Tribal Governments

This proposed rule does not have tribal implications under Executive Order 13175, Consultation and Coordination with Indian Tribal Governments, because it would not have a substantial direct effect on one or more Indian tribes, on the relationship between the Federal Government and Indian tribes, or on the distribution of power and responsibilities between the Federal Government and Indian tribes.

11. Energy Effects

We have analyzed this proposed rule under Executive Order 13211, Actions Concerning Regulations That Significantly Affect Energy Supply, Distribution, or Use. We have determined that it is not a ''significant energy action'' under that Order because it is not a ''significant regulatory action'' under Executive Order 12866 and is not likely to have a significant adverse effect on the supply, distribution, or use of energy. The Administrator of the Office of Information and Regulatory Affairs has not designated it as a significant energy action. Therefore, it does not require a Statement of Energy Effects under Executive Order 13211.

12. Technical Standards

This proposed rule does not use technical standards. Therefore, we did not consider the use of voluntary consensus standards.

13. Environment

We have analyzed this proposed rule under Department of Homeland Security Management Directive 023–01, and Commandant Instruction M16475.lD which guides the Coast Guard in complying with the National Environmental Policy Act of 1969 (NEPA) (42 U.S.C. 4321–4370f), and have made a preliminary determination that this action is one of a category of actions which do not individually or cumulatively have a significant effect on the human environment because it simply promulgates the operating regulations or procedures for drawbridges. This rule is categorically excluded from further review under paragraph 32(e) of Figure 2–1 of the Commandant Instruction. Under figure 2–1, paragraph (32)(e), of the Instruction, an environmental analysis checklist and a categorical exclusion determination are not required for this rule. We seek any comments or information that may lead to the discovery of a significant environmental impact from this proposed rule.

List of Subjects in 33 CFR Part 117

Bridges.

For the reasons discussed in the preamble, the Coast Guard proposes to amend 33 CFR part 117 as follows:

PART 117—DRAWBRIDGE OPERATION REGULATIONS

1. The authority citation for part 117 continues to read as follows:

Authority: 33 U.S.C. 499; 33 CFR 1.05–1; Department of Homeland Security Delegation No. 0170.1.

2. In § 117.435, the existing paragraph is designated paragraph (b). A new paragraph (a) is added to read as follows:

§ 117.435 Carlin Bayou.

(a) The draw of the Louisiana and Delta Railroad (LDRR) Bridge, mile 6.4, at Delcambre, shall operate as follows:

(1) The draw shall be maintained in the fully open position for navigation at all times, except during periods when it is closed for the passage of rail traffic.

(2) When a train approaches the bridge, it will stop and a crewmember from the train will observe the waterway for approaching vessels. If vessels are observed approaching the bridge, they will be allowed to pass prior to lowering the bridge. The crewmember will verify that the adjacent highway bridge is in the closed-to-navigation position prior to initiating the lowering sequence.

(3) After the train has completely passed over the bridge, the crewmember will initiate the raising sequence.

(4) To request openings of the bridge when the lift span is in the closed-to-navigation position, mariners may call the LDRR Signal Supervisor at 337–316–6015.

* * * * *

Dated: May 3, 2012.

Peter Troedsson,

Captain, U.S. Coast Guard, Commander, Eighth Coast Guard District Acting.

[FR Doc. 2012–12272 Filed 5–18–12; 8:45 am]

BILLING CODE 9110–04–P

DEPARTMENT OF HOMELAND SECURITY

Coast Guard

33 CFR Part 165

[Docket No. USCG–2012–0293]

RIN 1625–AA00

Safety Zone; Town of Cape Charles Fireworks, Cape Charles Harbor, Cape Charles, VA

AGENCY: Coast Guard, DHS.

ACTION: Notice of proposed rulemaking.

SUMMARY: The Coast Guard is proposing to establish a temporary safety zone on the waters of Cape Charles City Harbor in Cape Charles, VA in support of the Fourth of July Fireworks event. This action is intended to restrict vessel traffic movement to protect mariners from the hazards associated with firework displays.

DATES: Comments and related material must be received by the Coast Guard on or before June 20, 2012.

ADDRESSES: You may submit comments identified by docket number USCG–2012–0293 using any one of the following methods:

(1) *Federal eRulemaking Portal: http://www.regulations.gov.*

(2) *Fax:* 202–493–2251.

(3) *Mail:* Docket Management Facility (M–30), U.S. Department of Transportation, West Building Ground

Floor, Room W12–140, 1200 New Jersey Avenue SE., Washington, DC 20590–0001.

(4) *Hand delivery:* Same as mail address above, between 9 a.m. and 5 p.m., Monday through Friday, except Federal holidays. The telephone number is 202–366–9329.

To avoid duplication, please use only one of these four methods. See the ''Public Participation and Request for Comments'' portion of the **SUPPLEMENTARY INFORMATION** section below for instructions on submitting comments.

FOR FURTHER INFORMATION CONTACT: If you have questions on this proposed rule, call or email LCDR Hector Cintron, Waterways Management Division Chief, Sector Hampton Roads, Coast Guard; telephone 757–668–5581, email *Hector.L.Cintron@uscg.mil.* If you have questions on viewing or submitting material to the docket, call Renee V. Wright, Program Manager, Docket Operations, telephone 202–366–9826.

SUPPLEMENTARY INFORMATION: The Coast Guard anticipates that this proposed rule, when finalized, will be effective on July 4th and 5th, 2012.

Public Participation and Request for Comments

We encourage you to participate in this rulemaking by submitting comments and related materials. All comments received will be posted without change to *http://www.regulations.gov* and will include any personal information you have provided.

Submitting Comments

If you submit a comment, please include the docket number for this rulemaking (USCG–2012–0293), indicate the specific section of this document to which each comment applies, and provide a reason for each suggestion or recommendation. You may submit your comments and material online (via *http://www.regulations.gov*) or by fax, mail, or hand delivery, but please use only one of these means. If you submit a comment online via *www.regulations.gov,* it will be considered received by the Coast Guard when you successfully transmit the comment. If you fax, hand deliver, or mail your comment, it will be considered as having been received by the Coast Guard when it is received at the Docket Management Facility. We recommend that you include your name and a mailing address, an email address, or a telephone number in the body of your document so that we can contact you if we have questions regarding your submission.

To submit your comment online, go to *http://www.regulations.gov,* click on the ''submit a comment'' box, and insert ''USCG–2012–0293'' in the ''Keyword'' box, then click ''Search.'' If you submit your comments by mail or hand delivery, submit them in an unbound format, no larger than 8½ by 11 inches, suitable for copying and electronic filing. If you submit comments by mail and would like to know that they reached the Facility, please enclose a stamped, self-addressed postcard or envelope. We will consider all comments and material received during the comment period and may change the rule based on your comments.

Viewing Comments and Documents

To view comments, as well as documents mentioned in this preamble as being available in the docket, go to *http://www.regulations.gov,* click on the ''Keyword'' box and insert ''USCG–2012–0293'' and click ''Search.'' Click the ''Open Docket Folder'' in the ''Actions'' column. You may also visit the Docket Management Facility in Room W12–140 on the ground floor of the Department of Transportation West Building, 1200 New Jersey Avenue SE., Washington, DC 20590, between 9 a.m. and 5 p.m., Monday through Friday, except Federal holidays. We have an agreement with the Department of Transportation to use the Docket Management Facility.

Privacy Act

Anyone can search the electronic form of comments received into any of our dockets by the name of the individual submitting the comment (or signing the comment, if submitted on behalf of an association, business, labor union, etc.). You may review a Privacy Act notice regarding our public dockets in the January 17, 2008, issue of the **Federal Register** (73 FR 3316).

Public Meeting

We do not now plan to hold a public meeting. But you may submit a request for one using one of the four methods specified under **ADDRESSES**. Please explain why you believe a public meeting would be beneficial. If we determine that one would aid this rulemaking, we will hold one at a time and place announced by a later notice in the **Federal Register**.

For information on facilities or services for individuals with disabilities or to request special assistance at the public meeting, contact LCDR Hector Cintron at the telephone number or email address indicated under the **FOR FURTHER INFORMATION CONTACT** section of this notice.

Basis and Purpose

On July 4, 2012 the Town of Cape Charles will sponsor a fireworks display on the shoreline of the navigable waters of Cape Charles City Harbor centered on position 37°15′46.5″ N/076°01′30″ W (NAD 1983). Due to the need to protect mariners and spectators from the hazards associated with the fireworks display, such as the accidental discharge of fireworks, dangerous projectiles, and falling hot embers or other debris, vessel traffic will be temporarily restricted within 420 feet of the fireworks launch site.

Discussion of Proposed Rule

The Captain of the Port Hampton Roads proposes to establish a safety zone on specified waters of the Cape Charles City Harbor within the area bounded by a 420-foot radius circle centered on position 37°15′46.5″ N/076°01′30″ W (NAD 1983). This safety zone would be established in the vicinity of Cape Charles, VA from 9 p.m. to 10 p.m. on July 4, 2012, with a rain date of July 5, 2012 from 9 p.m. until 10 p.m.. In the interest of public safety, general navigation within the safety zone will be restricted during the specified date and times. Except for participants and vessels authorized by the Coast Guard Captain of the Port or his representative, no person or vessel may enter or remain in the regulated area.

Regulatory Analyses

We developed this proposed rule after considering numerous statutes and executive orders related to rulemaking. Below we summarize our analyses based on 13 of these statutes or executive orders.

Regulatory Planning and Review

This proposed rule is not a significant regulatory action under section 3(f) of Executive Order 12866, Regulatory Planning and Review, and does not require an assessment of potential costs and benefits under section 6(a)(3) of that Order. The Office of Management and Budget has not reviewed it under that Order.

We expect the economic impact of this proposed rule to be so minimal that a full Regulatory Evaluation is unnecessary. Although this proposed regulation restricts access to the safety zone, the effect of this rule will not be significant because: (i) The safety zone will be in effect for a limited duration; (ii) the zone is of limited size; and (iii) the Coast Guard will make notifications

via maritime advisories so mariners can adjust their plans accordingly.

Small Entities

Under the Regulatory Flexibility Act (5 U.S.C. 601–612), we have considered whether this proposed rule would have a significant economic impact on a substantial number of small entities. The term ''small entities'' comprises small businesses, not-for-profit organizations that are independently owned and operated and are not dominant in their fields, and governmental jurisdictions with populations of less than 50,000.

The Coast Guard certifies under 5 U.S.C. 605(b) that this proposed rule would not have a significant economic impact on a substantial number of small entities because the zone will only be in place for a limited duration and maritime advisories will be issued allowing the mariners to adjust their plans accordingly.

This proposed rule would affect the following entities, some of which might be small entities: the owners and operators of vessels intending to transit or anchor in that portion of the Cape Charles Harbor from 9 p.m. to 10:00 p.m. on July 4, 2012, with a rain date of July 5, 2012 from 9 p.m. until 10 p.m..

This safety zone would not have a significant economic impact on a substantial number of small entities for the following reasons. This safety zone would be activated, and thus subject to enforcement, for only one-half hour in the evening, when vessel traffic is low. Although the safety zone would apply to the entirety of Broad Bay, traffic would be allowed to pass through the zone with the permission of the Captain of the Port Before the activation of the zone, we would issue maritime advisories widely available to users of the river.

If you think that your business, organization, or governmental jurisdiction qualifies as a small entity and that this rule would have a significant economic impact on it, please submit a comment (see **ADDRESSES**) explaining why you think it qualifies and how and to what degree this rule would economically affect it.

Assistance for Small Entities

Under section 213(a) of the Small Business Regulatory Enforcement Fairness Act of 1996 (Pub. L. 104–121), we want to assist small entities in understanding this proposed rule so that they can better evaluate its effects on them and participate in the rulemaking. If the rule would affect your small business, organization, or governmental jurisdiction and you have questions concerning its provisions or options for compliance, please contact LCDR Hector Cintron, Waterways Management Division Chief, Sector Hampton Roads, Coast Guard; telephone 757–668–5581, email *Hector.L.Cintron@uscg.mil.* The Coast Guard will not retaliate against small entities that question or complain about this proposed rule or any policy or action of the Coast Guard.

Collection of Information

This proposed rule would call for no new collection of information under the Paperwork Reduction Act of 1995 (44 U.S.C. 3501–3520.).

Federalism

A rule has implications for federalism under Executive Order 13132, Federalism, if it has a substantial direct effect on State or local governments and would either preempt State law or impose a substantial direct cost of compliance on them. We have analyzed this proposed rule under that Order and have determined that it does not have implications for federalism.

Unfunded Mandates Reform Act

The Unfunded Mandates Reform Act of 1995 (2 U.S.C. 1531–1538) requires Federal agencies to assess the effects of their discretionary regulatory actions. In particular, the Act addresses actions that may result in the expenditure by a State, local, or tribal government, in the aggregate, or by the private sector of $100,000,000 (adjusted for inflation) or more in any one year. Though this proposed rule would not result in such an expenditure, we do discuss the effects of this rule elsewhere in this preamble.

Taking of Private Property

This proposed rule would not cause a taking of private property or otherwise have taking implications under Executive Order 12630, Governmental Actions and Interference with Constitutionally Protected Property Rights.

Civil Justice Reform

This proposed rule meets applicable standards in sections 3(a) and 3(b)(2) of Executive Order 12988, Civil Justice Reform, to minimize litigation, eliminate ambiguity, and reduce burden.

Protection of Children

We have analyzed this proposed rule under Executive Order 13045, Protection of Children from Environmental Health Risks and Safety Risks. This rule is not an economically significant rule and would not create an environmental risk to health or risk to safety that might disproportionately affect children.

Indian Tribal Governments

This proposed rule does not have tribal implications under Executive Order 13175, Consultation and Coordination with Indian Tribal Governments, because it would not have a substantial direct effect on one or more Indian tribes, on the relationship between the Federal Government and Indian tribes, or on the distribution of power and responsibilities between the Federal Government and Indian tribes.

Energy Effects

We have analyzed this proposed rule under Executive Order 13211, Actions Concerning Regulations That Significantly Affect Energy Supply, Distribution, or Use. We have determined that it is not a ''significant energy action'' under that order because it is not a ''significant regulatory action'' under Executive Order 12866 and is not likely to have a significant adverse effect on the supply, distribution, or use of energy. The Administrator of the Office of Information and Regulatory Affairs has not designated it as a significant energy action. Therefore, it does not require a Statement of Energy Effects under Executive Order 13211.

Technical Standards

The National Technology Transfer and Advancement Act (NTTAA) (15 U.S.C. 272 note) directs agencies to use voluntary consensus standards in their regulatory activities unless the agency provides Congress, through the Office of Management and Budget, with an explanation of why using these standards would be inconsistent with applicable law or otherwise impractical. Voluntary consensus standards are technical standards (e.g., specifications of materials, performance, design, or operation; test methods; sampling procedures; and related management systems practices) that are developed or adopted by voluntary consensus standards bodies.

This proposed rule does not use technical standards. Therefore, we did not consider the use of voluntary consensus standards.

Environment

We have analyzed this proposed rule under Department of Homeland Security Management Directive 023–01 and Commandant Instruction M16475.lD, which guide the Coast Guard in complying with the National Environmental Policy Act of 1969

(NEPA) (42 U.S.C. 4321–4370f), and have made a preliminary determination that this action is one of a category of actions which do not individually or cumulatively have a significant effect on the human environment. This rule is categorically excluded, under figure 2–1, paragraph (34)(g) of the Instruction because it involves the establishment of a temporary safety zone. An environmental analysis checklist and a categorical exclusion determination will be available in the docket where indicated under **ADDRESSES**. In accordance with the Coastal Zone Management Act, National Environmental Policy Act, and the Endangered Species Act an environmental consultation has been initiated with Virginia Department of Environmental Quality, Army Corps of Engineers, Virginia Marine Resource Commission, and The Department of Conservation and Recreation. We seek any comments or information that may lead to the discovery of a significant environmental impact from this proposed rule.

List of Subjects in 33 CFR Part 165

Harbors, Marine safety, Navigation (water), Reporting and recordkeeping requirements, Security measures, Waterways.

For the reasons discussed in the preamble, the Coast Guard proposes to amend 33 CFR part 165 as follows:

PART 165—REGULATED NAVIGATION AREAS AND LIMITED ACCESS AREAS

1. The authority citation for part 165 continues to read as follows:

Authority: 33 U.S.C. 1231; 46 U.S.C. Chapter 701, 3306, 3703; 50 U.S.C. 191, 195; 33 CFR 1.05–1, 6.04–1, 6.04–6, 160.5; Pub. L. 107–295, 116 Stat. 2064; Department of Homeland Security Delegation No. 0170.1.

2. Add § 165.T05–0293 to read as follows:

§ 165.T05–0293 Safety Zone; Cape Charles Fireworks, Cape Charles Harbor, Cape Charles, VA.

(a) *Regulated area.* The following area is a safety zone: specified waters of the Captain of the Port Sector Hampton Roads zone, as defined in 33 CFR 3.25–10, in the vicinity of Cape Charles Harbor in Cape Charles, VA and within 420 feet of position 37°15′46.5″ N/076°01′30″ W (NAD 1983).

(b) *Definition.* For the purposes of this part, Captain of the Port Representative means any U.S. Coast Guard commissioned, warrant or petty officer who has been authorized by the Captain of the Port, Hampton Roads, Virginia to act on his behalf.

(c) *Regulations.* (1) In accordance with the general regulations in § 165.23 of this part, entry into this zone is prohibited unless authorized by the Captain of the Port, Hampton Roads or his designated representatives.

(2) The operator of any vessel in the immediate vicinity of this safety zone shall:

(i) Stop the vessel immediately upon being directed to do so by any commissioned, warrant or petty officer on shore or on board a vessel that is displaying a U.S. Coast Guard Ensign.

(ii) Proceed as directed by any commissioned, warrant or petty officer on shore or on board a vessel that is displaying a U.S. Coast Guard Ensign.

(3) The Captain of the Port, Hampton Roads can be reached through the Sector Duty Officer at Sector Hampton Roads in Portsmouth, Virginia at telephone Number (757) 668–5555.

(4) The Coast Guard Representatives enforcing the safety zone can be contacted on VHF–FM marine band radio channel 13 (165.65 Mhz) and channel 16 (156.8 Mhz).

(d) *Enforcement period.* This regulation will be enforced from 9 p.m. until 10 p.m. on July 4, 2012, with a rain date of July 5, 2012, from 9 p.m. until 10 p.m.

Dated: May 3, 2012.

Mark S. Ogle,

Captain, U.S. Coast Guard, Captain of the Port Hampton Roads.

[FR Doc. 2012–12259 Filed 5–18–12; 8:45 am]

BILLING CODE 9110–04–P

DEPARTMENT OF HOMELAND SECURITY

Coast Guard

33 CFR Part 165

[Docket No. USCG–2012–0389]

RIN 1625–AA00

Safety Zone; Nautical City Festival Air Show, Rogers City, MI

AGENCY: Coast Guard, DHS.

ACTION: Notice of proposed rulemaking.

SUMMARY: The Coast Guard proposes to establish a safety zone in the Captain of the Port Sault Sainte Marie zone. This proposed safety zone is intended to restrict vessels from certain portions of water areas within Sector Sault Sainte Marie Captain of the Port zone. This temporary safety zone is necessary to protect spectators and vessels from the hazards associated with an air show performance.

DATES: Comments and related materials must be received by the Coast Guard on or before June 20, 2012.

ADDRESSES: You may submit comments identified by docket number USCG–2012–0389 using any one of the following methods:

(1) *Federal eRulemaking Portal: http://www.regulations.gov.*

(2) *Fax:* 202–493–2251.

(3) *Mail:* Docket Management Facility (M–30), U.S. Department of Transportation, West Building Ground Floor, Room W12–140, 1200 New Jersey Avenue SE., Washington, DC 20590–0001.

(4) *Hand delivery:* Same as mail address above, between 9 a.m. and 5 p.m., Monday through Friday, except Federal holidays. The telephone number is 202–366–9329.

To avoid duplication, please use only one of these four methods. See the ''Public Participation and Request for Comments'' portion of the **SUPPLEMENTARY INFORMATION** section below for instructions on submitting comments.

FOR FURTHER INFORMATION CONTACT: If you have questions on this proposed rule, call or email MST3 Kevin Moe, Prevention Department, Coast Guard, Sector Sault Sainte Marie, MI, telephone (906) 253–2429, email *Kevin.D.Moe@uscg.mil.* If you have questions on viewing or submitting material to the docket, call Renee V. Wright, Program Manager, Docket Operations, telephone 202–366–9826.

SUPPLEMENTARY INFORMATION:

Public Participation and Request for Comments

We encourage you to participate in this rulemaking by submitting comments and related materials. All comments received will be posted without change to *http://www.regulations.gov* and will include any personal information you have provided.

Submitting Comments

If you submit a comment, please include the docket number for this rulemaking (USCG–2012–0389), indicate the specific section of this document to which each comment applies, and provide a reason for each suggestion or recommendation. You may submit your comments and material online (via *http://www.regulations.gov*) or by fax, mail, or hand delivery, but please use only one of these means. If you submit a comment online via *www.regulations.gov,* it will be considered received by the Coast Guard when you successfully transmit

the comment. If you fax, hand deliver, or mail your comment, it will be considered as having been received by the Coast Guard when it is received at the Docket Management Facility. We recommend that you include your name and a mailing address, an email address, or a telephone number in the body of your document so that we can contact you if we have questions regarding your submission.

To submit your comment online, go to *http://www.regulations.gov,* click on the ''submit a comment'' box, which will then become highlighted in blue. In the ''Document Type'' drop down menu select ''Proposed Rule'' and insert ''USCG–2012–0389'' in the ''Keyword'' box. If you submit your comments by mail or hand delivery, submit them in an unbound format, no larger than 8½ by 11 inches, suitable for copying and electronic filing. If you submit comments by mail and would like to know that they reached the Facility, please enclose a stamped, self-addressed postcard or envelope. We will consider all comments and material received during the comment period and may change the rule based on your comments.

Viewing Comments and Documents

To view comments, as well as documents mentioned in this preamble as being available in the docket, go to *http://www.regulations.gov,* insert ''USCG–2012–0389'' and click ''Search.'' You may also visit the Docket Management Facility in Room W12–140 on the ground floor of the Department of Transportation West Building, 1200 New Jersey Avenue SE., Washington, DC 20590, between 9 a.m. and 5 p.m., Monday through Friday, except Federal holidays. We have an agreement with the Department of Transportation to use the Docket Management Facility.

Privacy Act

Anyone can search the electronic form of comments received into any of our dockets by the name of the individual submitting the comment (or signing the comment, if submitted on behalf of an association, business, labor union, etc.). You may review a Privacy Act notice regarding our public dockets in the January 17, 2008, issue of the **Federal Register** (73 FR 3316).

Public Meeting

We do not now plan to hold a public meeting, but you may submit a request for one by using one of the four methods specified under **ADDRESSES**. Please explain why you believe a public meeting would be beneficial. If we determine that one would aid this rulemaking, we will hold one at a time and place announced by a later notice in the **Federal Register**.

Background and Purpose

On the weekend of August 3 through 5, 2012, The Nautical City Festival will be celebrating Calcite's 100th Anniversary. As part of that celebration, an air show will be launched to the east of the Rogers City marina. The Captain of the Port Sault Sainte Marie has determined that the air show event poses various hazards to the public such as debris falling into the water and general congestion of the waterway.

Discussion of Proposed Rule

To safeguard against the dangers posed by the Nautical City Festival air show near Rogers City, MI, the Captain of the Port Sault Sainte Marie has determined that a temporary safety zone is necessary. Thus, the Captain of the Port Sault Sainte Marie proposes to establish a safety zone on Lake Huron to include all waters within a 5000' by 2000' rectangle bounded by a line drawn from 45°25′30.67″ N, 083°48′19.54″ W then southeast to 45°25′24.85″ N, 083°47′09.68″ W then southwest to 45°25′05.41″ N, 083°47′12.84″ W then northwest to 45°25′11.30″ N 083°48′22.88″ W then back to the point of origin [DATUM: NAD 83].

This proposed safety zone would be enforced from 1 p.m. until 5 p.m. each day on August 3–5, 2012. Entry into, transiting, or anchoring within the proposed safety zone would be prohibited unless authorized by the Captain of the Port Sector Sault Sainte Marie or his on-scene representative. All persons and vessels authorized to enter the proposed safety zone would be required to comply with the instructions of the Coast Guard Captain of the Port or the designated on-scene representative. The Captain of the Port or his on-scene representative may be contacted via VHF Channel 16.

Regulatory Analyses

We developed this proposed rule after considering numerous statutes and executive orders related to rulemaking. Below we summarize our analyses based on 13 of these statutes or executive orders.

Regulatory Planning and Review

This proposed rule is not a significant regulatory action under section 3(f) of Executive Order 12866, Regulatory Planning and Review, and does not require an assessment of potential costs and benefits under section 6(a)(3) of that Order. The Office of Management and Budget has not reviewed it under that Order. It is not ''significant'' under the regulatory policies and procedures of the Department of Homeland Security (DHS). We conclude that this proposed rule is not a significant regulatory action because we anticipate that it will have minimal impact on the economy, will not interfere with other agencies, will not adversely alter the budget of any grant or loan recipients, and will not raise any novel legal or policy issues. The safety zone established by this proposed rule will be relatively small and enforced for a relatively short time. Also, the safety zone is designed to minimize its impact on navigable waters in that vessels may still transit unrestricted portions of the waterways. Under certain conditions, moreover, vessels may still transit through the safety zone when permitted by the Captain of the Port Sault Sainte Marie. On the whole, the Coast Guard expects insignificant adverse impact to mariners from the enforcement of this proposed safety zone.

Small Entities

Under the Regulatory Flexibility Act (5 U.S.C. 601–612), we have considered whether this proposed rule would have a significant economic impact on a substantial number of small entities. The term ''small entities'' comprises small businesses, not-for-profit organizations that are independently owned and operated and are not dominant in their fields, and governmental jurisdictions with populations of less than 50,000.

The Coast Guard certifies under 5 U.S.C. 605(b) that this proposed rule will not have a significant economic impact on a substantial number of small entities.

This proposed rule will affect the following entities, some of which may be small entities: The owners and operators of vessels intending to transit around the waters near Rogers City, Michigan, between 1 p.m. and 5 p.m. on August 3 through 5, 2012.

This proposed safety zone will not have a significant economic impact on a substantial number of small entities for the following reasons: This rule will be in effect for only four hours per day. Vessel traffic may still safely pass outside the safety zone during the event. In the event that this temporary safety zone affects shipping, commercial vessels may request permission from the Captain of the Port Sault Sainte Marie to transit through the safety zone. The Coast Guard will give notice to the public via a Broadcast to Mariners that the regulation is in effect.

If you think that your business, organization, or governmental jurisdiction qualifies as a small entity and that this proposed rule would have a significant economic impact on it, please submit a comment (see **ADDRESSES**) explaining why you think it qualifies and how and to what degree this rule would economically affect it.

Assistance for Small Entities

Under section 213(a) of the Small Business Regulatory Enforcement Fairness Act of 1996 (Pub. L. 104–121), we want to assist small entities in understanding this proposed rule so that they can better evaluate its effects on them and participate in the rulemaking. If this proposed rule would affect your small business, organization, or governmental jurisdiction and you have questions concerning its provisions or options for compliance, please contact MST3 Kevin Moe, Prevention Department, Coast Guard Sector Sault Sainte Marie, MI at (906) 253–2429. The Coast Guard will not retaliate against small entities that question or complain about this proposed rule or any policy or action of the Coast Guard.

Collection of Information

This proposed rule calls for no new collection of information under the Paperwork Reduction Act of 1995 (44 U.S.C. 3501–3520).

Federalism

A rule has implications for federalism under Executive Order 13132, Federalism, if it has a substantial direct effect on State or local governments and would either preempt State law or impose a substantial direct cost of compliance on them. We have analyzed this proposed rule under that Order and have determined that it does not have implications for federalism.

Unfunded Mandates Reform Act

The Unfunded Mandates Reform Act of 1995 (2 U.S.C. 1531–1538) requires Federal agencies to assess the effects of their discretionary regulatory actions. In particular, the Act addresses actions that may result in the expenditure by a State, local, or tribal government, in the aggregate, or by the private sector of $100,000,000 (adjusted for inflation) or more in any one year. Though this proposed rule will not result in such an expenditure, we do discuss the effects of this proposed rule elsewhere in this preamble.

Taking of Private Property

This proposed rule will not affect the taking of private property or otherwise have taking implications under Executive Order 12630, Governmental Actions and Interference with Constitutionally Protected Property Rights.

Civil Justice Reform

This proposed rule meets applicable standards in sections 3(a) and 3(b)(2) of Executive Order 12988, Civil Justice Reform, to minimize litigation, eliminate ambiguity, and reduce burden.

Protection of Children

We have analyzed this proposed rule under Executive Order 13045, Protection of Children from Environmental Health Risks and Safety Risks. This proposed rule is not an economically significant rule and would not create an environmental risk to health or risk to safety that may disproportionately affect children.

Indian Tribal Governments

This proposed rule does not have tribal implications under Executive Order 13175, Consultation and Coordination with Indian Tribal Governments, because it does not have a substantial direct effect on one or more Indian tribes, on the relationship between the Federal Government and Indian tribes, or on the distribution of power and responsibilities between the Federal Government and Indian tribes.

Energy Effects

We have analyzed this proposed rule under Executive Order 13211, Actions Concerning Regulations That Significantly Affect Energy Supply, Distribution, or Use. We have determined that it is not a ''significant energy action'' under that order because it is not a ''significant regulatory action'' under Executive Order 12866 and is not likely to have a significant adverse effect on the supply, distribution, or use of energy. The Administrator of the Office of Information and Regulatory Affairs has not designated it as a significant energy action. Therefore, it does not require a Statement of Energy Effects under Executive Order 13211.

Technical Standards

The National Technology Transfer and Advancement Act (NTTAA) (15 U.S.C. 272 note) directs agencies to use voluntary consensus standards in their regulatory activities unless the agency provides Congress, through the Office of Management and Budget, with an explanation of why using these standards would be inconsistent with applicable law or otherwise impractical. Voluntary consensus standards are technical standards (e.g., specifications of materials, performance, design, or operation; test methods; sampling procedures; and related management systems practices) that are developed or adopted by voluntary consensus standards bodies.

This proposed rule does not use technical standards. Therefore, we did not consider the use of voluntary consensus standards.

Environment

We have analyzed this proposed rule under Department of Homeland Security Management Directive 023–01 and Commandant Instruction M16475.lD, which guide the Coast Guard in complying with the National Environmental Policy Act of 1969 (NEPA) (42 U.S.C. 4321–4370f), and have made a preliminary determination that this action is one of a category of actions that do not individually or cumulatively have a significant effect on the human environment. A preliminary environmental analysis checklist supporting this preliminary determination is available in the docket where indicated under **ADDRESSES**. This proposed rule involves the establishment of a safety zone and therefore paragraph (34) (g) of figure 2–1 applies. We seek any comments or information that may lead to the discovery of a significant environmental impact from this proposed rule.

List of Subjects in 33 CFR Part 165

Harbors, Marine safety, Navigation (water), Reporting and recordkeeping requirements, Security measures, Waterways.

For the reasons discussed in the preamble, the Coast Guard proposes to amend 33 CFR part 165 as follows:

PART 165—REGULATED NAVIGATION AREAS AND LIMITED ACCESS AREAS

1. The authority citation for part 165 continues to read as follows:

Authority: 33 U.S.C. 1231; 46 U.S.C. Chapter 701, 3306, 3703; 50 U.S.C. 191, 195; 33 CFR 1.05–1, 6.04–1, 6.04–6, and 160.5; Pub. L. 107–295, 116 Stat. 2064; Department of Homeland Security Delegation No. 0170.1.

2. Add § 165.T09–0389 to read as follows:

§ 165.T09–0389 Safety Zone: Nautical City Festival Air Show, Rogers City MI.

(a) *Location.* The following area is a temporary safety zone: All U.S. navigable waters of Lake Huron inside a 5000′ by 2000′ rectangle bounded by a line drawn from 45°25′30.67″ N, 083°48′19.54″ W then southeast to 45°25′24.85″ N, 083°47′09.68″ W then southwest to 45°25′05.41″N,

083°47′12.84″ W then northwest to 45°25′11.30″ N 083°48′22.88″ W then back to the point of origin [DATUM: NAD 83].

(b) *Enforcement period.* This regulation will be enforced from 1 p.m. until 5 p.m. on August 3–5, 2012.

(1) The Captain of the Port, Sector Sault Sainte Marie may suspend at any time the enforcement of the safety zone established under this section.

(2) The Captain of the Port, Sector Sault Sainte Marie, will notify the public of the enforcement and suspension of enforcement of the safety zone established by this section via any means that will provide as much notice as possible to the public. These means might include some or all of those listed in 33 CFR 165.7(a). The primary method of notification, however, will be through Broadcast Notice to Mariners and local Notice to Mariners.

(c) *Definitions.* The following definitions apply to this section:

(1) Designated representative means any Coast Guard commissioned, warrant, or petty officer designated by the Captain of the Port Sault Sainte Marie to monitor these safety zones, permit entry into these safety zones, give legally enforceable orders to persons or vessels within these safety zones, or take other actions authorized by the Captain of the Port.

(2) Public vessel means a vessel owned, chartered, or operated by the United States or by a State or political subdivision thereof.

(d) *Regulations.* (1) The general regulations in 33 CFR 165.23 apply.

(2) All persons and vessels must comply with the instructions of the Coast Guard Captain of the Port Sault Sainte Marie or a designated representative. Upon being hailed by the U.S. Coast Guard by siren, radio, flashing light or other means, the operator of a vessel shall proceed as directed.

(3) When the safety zone established by this section is being enforced, all vessels must obtain permission from the Captain of the Port Sault Sainte Marie or his or her designated representative to enter, move within, or exit that safety zone. Vessels and persons granted permission to enter the safety zone shall obey all lawful orders or directions of the Captain of the Port or his or her designated representative. While within the safety zone, all vessels shall operate at the minimum speed necessary to maintain a safe course.

(e) *Exemption.* Public vessels, as defined in paragraph (c) of this section, are exempt from the requirements in this section.

Dated: May 4, 2012.

J.C. McGuiness,

Captain, U.S. Coast Guard, Captain of the Port Sault Sainte Marie.

[FR Doc. 2012–12261 Filed 5–18–12; 8:45 am]

BILLING CODE 9110–04–P

ENVIRONMENTAL PROTECTION AGENCY

40 CFR Part 98

[EPA–HQ–OAR–2011–0147; FRL–9667–4]

RIN 2060–AR53

2012 Technical Corrections, Clarifying and Other Amendments to the Greenhouse Gas Reporting Rule, and Proposed Confidentiality Determinations for Certain Data Elements of the Fluorinated Gas Source Category

AGENCY: Environmental Protection Agency (EPA).

ACTION: Proposed rule.

SUMMARY: The EPA is proposing to amend specific provisions of the Greenhouse Gas Reporting Rule to provide greater clarity and flexibility to facilities subject to reporting emissions from certain source categories. These source categories will report greenhouse gas (GHG) data for the first time in September of 2012. The proposed changes are not expected to significantly change the overall calculation and monitoring requirements of the Greenhouse Gas Reporting Rule or add additional requirements for reporters, but are expected to correct errors and clarify existing requirements in order to facilitate accurate and timely reporting. The EPA is also proposing confidentiality determinations for four new data elements for the fluorinated gas production source category of the Greenhouse Gas Reporting Rule. Lastly, we are proposing an amendment to Table A–7 of the general provisions to add a data element used as an input to an emission equation in the fluorinated gas production source category.

DATES: Comments. Comments must be received on or before June 20, 2012.

Public Hearing. The EPA does not plan to conduct a public hearing unless requested. To request a hearing, please contact the person listed in the following **FOR FURTHER INFORMATION CONTACT** section by May 29, 2012. Upon such request, the EPA will hold the hearing on June 5, 2012, in the Washington, DC area. The EPA will provide further information about the hearing on the GHGRP Web site, *http://www.epa.gov/climatechange/emissions/ghgrulemaking.html* if a hearing is requested.

ADDRESSES: Submit your comments, identified by Docket ID No. EPA–HQ–OAR–2011–0147, by one of the following methods:

- *Federal eRulemaking Portal: http://www.regulations.gov.* Follow the online instructions for submitting comments.
- *Email: MRR_Corrections@epa.gov.* Include Docket ID No. EPA–HQ–OAR–2011–0147 [and/or RIN number] in the subject line of the message.
- *Fax:* (202) 566–9744.
- *Mail:* Environmental Protection Agency, EPA Docket Center (EPA/DC), Mailcode 2822T, Attention Docket ID No. EPA–HQ–OAR–2011–0147, 1200 Pennsylvania Avenue NW., Washington, DC 20004.
- *Hand/Courier Delivery:* EPA Docket Center, Public Reading Room, EPA West Building, Room 3334, 1301 Constitution Avenue NW., Washington, DC 20004. Such deliveries are only accepted during the Docket's normal hours of operation, and special arrangements should be made for deliveries of boxed information.

Additional Information on Submitting Comments: To expedite review of your comments by agency staff, you are encouraged to send a separate copy of your comments, in addition to the copy you submit to the official docket, to Carole Cook, U.S. EPA, Office of Atmospheric Programs, Climate Change Division, Mail Code 6207–J, Washington, DC 20460, telephone (202) 343–9263, email address: *GHGReportingRule@epa.gov.*

Instructions: Direct your comments to Docket ID No. EPA–HQ–OAR–2011–0147. The EPA's policy is that all comments received will be included in the public docket without change and may be made available online at *http://www.regulations.gov,* including any personal information provided, unless the comment includes information claimed to be confidential business information (CBI) or other information whose disclosure is restricted by statute. Should you choose to submit information that you claim to be CBI in response to this notice, clearly mark the part or all of the comments that you claim to be CBI submitted in response to this notice. For information that you claim to be CBI in a disk or CD–ROM that you mail to EPA, mark the outside of the disk or CD–ROM as CBI and then identify electronically within the disk or CD–ROM the specific information that is claimed as CBI. In addition to one complete version of the comment that includes information claimed as CBI, a copy of the comment that does not

contain the information claimed as CBI must be submitted for inclusion in the public docket. Information marked as CBI will not be disclosed except in accordance with procedures set forth in 40 CFR part 2. Send or deliver information claimed as CBI to only the mail or hand/courier deliver address listed above, attention: Docket ID No. EPA–HQ–OAR–2011–0147.

If you have any questions about CBI or the procedures for claiming CBI, please consult the person identified in the **FOR FURTHER INFORMATION CONTACT** section. Do not submit information that you consider to be CBI or otherwise protected through *http://www.regulations.gov* or email. The *http://www.regulations.gov* Web site is an ''anonymous access'' system, which means the EPA will not know your identity or contact information unless you provide it in the body of your comment. If you send an email comment directly to the EPA without going through *http://www.regulations.gov* your email address will be automatically captured and included as part of the comment that is placed in the public docket and made available on the Internet. If you submit an electronic comment, the EPA recommends that you include your name and other contact information in the body of your comment and with any disk or CD–ROM you submit. If the EPA cannot read your comment due to technical difficulties and cannot contact you for clarification, the EPA may not be able to consider your comment. Electronic files should avoid the use of special characters, any form of encryption, and be free of any defects or viruses.

Docket: All documents in the docket are listed in the *http://www.regulations.gov* index. Although listed in the index, some information is not publicly available, e.g., CBI or other information whose disclosure is restricted by statute. Certain other material, such as copyrighted material, will be publicly available only in hard copy. Publicly available docket materials are available either electronically in *http://www.regulations.gov* or in hard copy at the Air Docket, EPA/DC, EPA West Building, Room 3334, 1301 Constitution Ave. NW., Washington, DC. This Docket Facility is open from 8:30 a.m. to 4:30 p.m., Monday through Friday, excluding legal holidays. The telephone number for the Public Reading Room is (202) 566–1744, and the telephone number for the Air Docket is (202) 566–1742.

FOR FURTHER INFORMATION CONTACT: Carole Cook, Climate Change Division, Office of Atmospheric Programs (MC–6207J), Environmental Protection Agency, 1200 Pennsylvania Ave. NW., Washington, DC 20460; telephone number: (202) 343–9263; fax number: (202) 343–2342; email address: *GHGReportingRule@epa.gov.* For technical information, please go to the Greenhouse Gas Reporting Rule Program Web site at *http://www.epa.gov/climatechange/emissions/ghgrulemaking.html.* To submit a question, select Rule Help Center, followed by Contact Us. To obtain information about the public hearing or to register to speak at the hearing, please go to *http://www.epa.gov/climatechange/emissions/ghgrulemaking.html.* Alternatively, contact Carole Cook at 202–343–9263.

Worldwide Web (WWW). In addition to being available in the docket, an electronic copy of this proposal will also be available through the WWW. Following the Administrator's signature, a copy of this action will be posted on the EPA's Greenhouse Gas Reporting Program Web site at *http://www.epa.gov/climatechange/emissions/ghgrulemaking.html.*

SUPPLEMENTARY INFORMATION:

Regulated Entities. The Administrator determined that this action is subject to the provisions of Clean Air Act (CAA) section 307(d). See CAA section 307(d)(1)(V) (the provisions of section 307(d) apply to ''such other actions as the Administrator may determine''). These are proposed amendments to existing regulations. If finalized, these amended regulations would affect owners or operators of direct emitters of GHGs. Regulated categories and examples of affected entities include those listed in Table 1 of this preamble:

TABLE 1—EXAMPLES OF AFFECTED ENTITIES BY CATEGORY

Category	NAICS	Examples of affected facilities
Petroleum and Natural Gas Systems	486210	Pipeline transportation of natural gas.
	221210	Natural gas distribution facilities.
	211	Extractors of crude petroleum and natural gas.
	211112	Natural gas liquid extraction facilities.
Electronics Manufacturing	334111	Microcomputers manufacturing facilities.
	334413	Semiconductor, photovoltaic (solid-state) device manufacturing facilities.
	334419	LCD unit screens manufacturing facilities.
	334419	MEMS manufacturing facilities.
Fluorinated Gas Production	325120	Industrial gases manufacturing facilities.
Industrial Waste Landfills	562212	Solid waste landfills.
	322110	Pulp mills.
	322121	Paper mills.
	322122	Newsprint mills.
	322130	Paperboard mills.
	311611	Meat processing facilities.
	311411	Frozen fruit, juice, and vegetable manufacturing facilities.
	311421	Fruit and vegetable canning facilities.
	221320	Sewage treatment facilities.

Table 1 of this preamble is not intended to be exhaustive, but rather lists the types of facilities that the EPA is now aware could be potentially affected by the reporting requirements. Other types of facilities not listed in the table could also be subject to reporting requirements. To determine whether you are affected by this action, you should carefully examine the applicability criteria found in 40 CFR part 98, subpart A or the relevant criteria in the sections related to direct emitters of GHGs. If you have questions regarding the applicability of this action to a particular facility, consult the person listed in the preceding **FOR FURTHER INFORMATION CONTACT** section.

Acronyms and Abbreviations. The following acronyms and abbreviations are used in this document.

acf actual cubic feet
AGR acid gas removal
ASTM American Society for Testing and Materials
BAMM best available monitoring methods
CAA Clean Air Act
CBI confidential business information
CEMS continuous emissions monitoring system
CFC chlorofluorocarbon
CFR Code of Federal Regulations
CH_4 methane
CO_2 carbon dioxide
DOC degradable organic carbon
EF emission factor
e-GGRT electronic-GHG Reporting Tool
EPA U.S. Environmental Protection Agency
FR Federal Register
GHG greenhouse gas
GHGRP Greenhouse Gas Reporting Program
HCFC hydrochlorofluorocarbon
kg kilograms
kg/ft^3 kilograms per cubic foot
mcf methane correction factor
MMscf million standard cubic feet
MRV monitoring, reporting and verification
MSHA Mine Safety and Health Administration
$MtCO_2e$ metric tons carbon dioxide equivalent
N_2O nitrous oxide
NAICS North American Industry Classification System
NOAA National Oceanic and Atmospheric Administration
NTTAA National Technology Transfer and Advancement Act
OMB Office of Management and Budget
PFCs perfluorocarbons
psia pounds per square inch absolute
RFA Regulatory Flexibility Act
SF_6 sulfur hexafluoride
U.S. United States
UMRA Unfunded Mandates Reform Act of 1995

Table of Contents

I. Background
A. How is this preamble organized?
B. Background on This Action
C. Legal Authority
D. How would these amendments apply to 2012 reports?
E. How would these amendments affect confidentiality determinations?
II. Technical Corrections, Clarifying and Other Amendments
A. Subpart A—General Provisions
1. Background
2. Proposed Amendments
3. Overview and Approach to Proposed CBI Determinations
B. Subpart TT—Industrial Waste Landfills
1. Background
2. Proposed Amendment
3. Overview and Approach to Proposed CBI Determinations
C. Subpart W—Petroleum and Natural Gas Systems
1. Background
2. Proposed Technical Corrections
3. Overview and Approach to Proposed CBI Determinations
D. Subpart L—Fluorinated Gas Production
1. Background
2. Proposed Amendments
3. Overview and Approach to Proposed CBI Determinations
III. Statutory and Executive Order Reviews
A. Executive Order 12866: Regulatory Planning and Review and Executive Order 13563: Improving Regulation and Regulatory Review
B. Paperwork Reduction Act
C. Regulatory Flexibility Act (RFA)
D. Unfunded Mandates Reform Act (UMRA)
E. Executive Order 13132: Federalism
F. Executive Order 13175: Consultation and Coordination With Indian Tribal Governments
G. Executive Order 13045: Protection of Children From Environmental Health Risks and Safety Risks
H. Executive Order 13211: Actions That Significantly Affect Energy Supply, Distribution, or Use
I. National Technology Transfer and Advancement Act
J. Executive Order 12898: Federal Actions To Address Environmental Justice in Minority Populations and Low-Income Populations

I. Background

A. How is this preamble organized?

The first section of this preamble contains the basic background information about the origin of these proposed rule amendments and request for public comment. This section also discusses the EPA's use of our legal authority under the Clean Air Act to collect data under the Mandatory Reporting of Greenhouse Gases Reporting Rule, hereinafter referred to as the ''GHG Reporting Rule.''

The second section of this preamble describes in detail the changes that are being proposed to correct technical errors, to provide clarification, or to address implementation issues identified by the EPA and others. This section also presents the EPA's rationale for the proposed changes and identifies issues on which the EPA is particularly interested in receiving public comments. This section also includes proposed confidentiality determinations for four new data elements for the fluorinated gas production source category of the Greenhouse Gas Reporting Rule.

Finally, the last (third) section of the preamble discusses the various statutory and executive order requirements applicable to this proposed rulemaking.

B. Background on This Action

The 2009 final GHG Reporting Rule was signed by EPA Administrator Lisa Jackson on September 22, 2009 and published in the **Federal Register** on October 30, 2009 (74 FR 56260, hereafter referred to as the ''2009 final rule'' or ''Part 98''). The 2009 final rule, which became effective on December 29, 2009, requires reporting of GHGs from various facilities and suppliers, consistent with the 2008 Consolidated Appropriations Act.[1] Subsequent notices were published in 2010 finalizing the requirements for subpart TT (75 FR 39736, July 12, 2010), subpart W (75 FR 74458, November 30, 2010), and subpart L (75 FR 74774, December 1, 2010).

Following the promulgation of these subparts, the EPA finalized four technical corrections and clarifying amendments to these and other subparts under the Greenhouse Gas Reporting Program (GHGRP) (75 FR 66434, October 28, 2010; 75 FR 79092, December 17, 2010; 76 FR 73866, November 29, 2011; 76 FR 80554, December 23, 2011). The corrections and amendments within those four actions did not change the basic requirements of the rule, but were intended to improve clarity and ensure consistency across the calculation, monitoring, and data reporting requirements. Similarly, the corrections, clarifying and other amendments in this action are intended to provide greater clarity and flexibility to facilities subject to reporting in 2012.

On January 10, 2012 (77 FR 1434), EPA proposed confidentiality determinations for data elements (excluding those in the inputs to equation category) in 8 subparts of part 98, including subpart L. This proposed amendment includes adding 4 new data elements to subpart L. In conjunction with this addition, we are proposing confidentiality determinations for the new data elements in the proposed amendment to subpart L.

C. Legal Authority

The EPA is proposing these rule amendments under its existing CAA authority, specifically authorities provided in CAA section 114. As stated in the preamble to the 2009 final rule (74 FR 56260, October 30, 2009) and the Response to Comments on the Proposed Rule, Volume 9, Legal Issues, CAA section 114 provides the EPA broad authority to require the information proposed to be gathered by this rule because such data would inform and are relevant to the EPA's carrying out a wide variety of CAA provisions. As discussed in the preamble to the initial proposed rule (74 FR 16448, April 10, 2009), CAA section 114(a)(1) authorizes the Administrator to require emissions sources, persons subject to the CAA, manufacturers of control or process equipment, or persons who the

[1] Consolidated Appropriations Act, 2008, Public Law 110–161, 121 Stat. 1844, 2128.

Administrator believes may have necessary information to monitor and report emissions and provide such other information the Administrator requests for the purposes of carrying out any provision of the CAA. For further information about the EPA's legal authority, see the preambles to the 2009 proposed and final rules and EPA's Response to Comments, Volume 9.

In addition, EPA is proposing confidentiality determinations for four proposed data elements in subpart L, under its authorities provided in sections 114, 301 and 307 of the CAA. As mentioned above, CAA section 114 provides EPA authority to obtain the information in part 98, including those in subpart L. Section 114(c) requires that EPA make publicly available information obtained under section 114 except for information (excluding emission data) that qualify for confidential treatment.

The Administrator has determined that this action (proposed amendment and confidentiality determination) is subject to the provisions of section 307(d) of the CAA.

D. How would these amendments apply to 2012 reports?

The EPA is proposing technical clarifications and amendments to 40 CFR part 98, subparts A, L, W, and TT. The EPA is planning to address any comments on these proposed amendments and publish final amendments before September 28, 2012. Therefore, reporters would be expected to calculate emissions and other relevant data for the reports that are submitted by September 28, 2012 using 40 CFR part 98 as amended by this proposed action. We have determined that it is feasible for the sources to implement these changes for the 2011 reporting year because the revisions are primarily technical corrections that provide clarifications regarding the existing regulatory requirements, or reduce the amount of information that is required to be reported. The proposed amendments do not change the type of information that must be collected, and do not materially affect how emissions are calculated.

In the case of 40 CFR part 98, subpart A (subpart A), the proposed amendment is merely a harmonizing change to a technical correction finalized in February 2012 (see 77 FR 10373). That final amendment required reporters to calculate emissions of certain additional fluorinated heat transfer fluids under subpart I; however, the EPA inadvertently did not amend the corresponding requirement to include those calculated emissions in the annual GHG report. In this action, we are proposing to include these emissions from heat transfer fluids in the facility level totals reported to the EPA in the annual GHG report.

In the case of 40 CFR part 98, subpart L (subpart L), the EPA is proposing that facilities subject to subpart L report greenhouse gas emissions in a less detailed manner for Reporting Years 2011 and 2012. This proposed amendment is a temporary change (i.e., for years 2011 and 2012 only) to allow the EPA time to fully evaluate concerns recently raised by stakeholders that reporting, and subsequent EPA release, of certain emission data would reveal trade secrets.

In the case of 40 CFR part 98, subpart W (subpart W), the EPA concludes that these proposed amendments are all technical corrections that, while important to make to allow reporters to calculate emissions accurately, do not materially affect the actions facilities would have already undertaken to comply with the rule. For example, in this action, EPA is proposing a correction to the emission factors in Table W–1A of subpart W for the onshore petroleum and natural gas production segment. In the December 23, 2011 final rule (76 FR 80554, December 23, 2011, referred to hereinafter as the ''December 2011 final rule''), the EPA revised several of the emission factors in this table, along with the emission factors in other tables in subpart W to reflect a consistent standard temperature and pressure. In the process of converting specific emission factors within Table W–1A of subpart W an omission occurred that we are proposing to correct in this action. As stated previously, a proposed change such as this would not materially affect the actions a facility would undertake to comply with the rule.

In the case of 40 CFR part 98, subpart TT (subpart TT), this proposal excludes some facilities from the reporting requirements and thereby further reduces the reporting under the GHG Reporting Rule. These excluded facilities are not expected to emit GHGs since they only receive inert wastes that do not generate methane.

For additional background information regarding some of these amendments, please refer to the Technical Support Document for the 2012 Technical Corrections, Clarifying and Other Amendments to Certain Provisions of the Greenhouse Gas Reporting Rule proposal available in the docket for this rulemaking (EPA–HQ–OAR–2011–0147).

The EPA generally seeks comment on the EPA's conclusion that it would be appropriate to implement these proposed amendments and incorporate the requirements for the data that must be reported to the EPA by September 2012. Further, we seek comment on whether there are specific proposed changes for which this timeline may not be feasible or appropriate. We request that commenters provide specific examples of how the proposed implementation schedule would or would not be feasible.

E. How would these amendments affect confidentiality determinations?

The proposed amendments do not affect the confidentiality determinations for subpart A data elements finalized in the Final CBI rule,[2] (hereinafter referred to as the ''final CBI rule''), the proposed determinations for subpart W [3] and subparts L and TT,[4] or the proposed or final deferral rule(s) extending the reporting deadlines for the data elements in these subparts that are as assigned to the inputs to emission equations data category.[5]

In this notice, we are proposing confidentiality determinations for proposed new subpart L data elements. The proposed confidentiality determinations for these new data elements together with our rationale are discussed in detail in Section II.D.3 of this preamble.

There are no proposed determinations for subparts A, W, and TT, since the proposed amendments to those subparts do not include any proposed new data elements. The proposed amendments would delete an existing subpart W data element and make only minor clarifications to the existing reporting requirements in subpart W. For the Subpart A proposed amendments, we are not proposing any confidentiality determinations because the data element being added is a subset of another data element in subpart I for which we've already proposed a CBI determination. This is explained in further detail in Section II.A.3 of this preamble. There are no proposed amendments to the reporting requirements for subpart TT.

II. Technical Corrections, Clarifying and Other Amendments

The EPA has identified minor corrections, clarifying and other amendments that we are now proposing in this action. We have also identified certain rule provisions that we are

[2] See 75 FR 30782, May 26, 2011.

[3] See 77 FR 11039, February 24, 2012.

[4] See 77 FR 1434, January 10, 2012.

[5] See 77 FR 11039, February 24, 2012 (subpart I), 77 FR 1434, January 10, 2012 (subpart W), and 76 FR 53057, August 25, 2011.

proposing to amend to provide greater clarity. The amendments we are now proposing include the following types of changes:

- Changes to correct cross references within and between subparts.
- Amendments to certain equations to better reflect actual operating conditions.
- Corrections to terms and definitions in certain equations.
- Corrections to data reporting requirements so that they more closely conform to the information used to perform emission calculations.
- Amendment to Table A–7 to subpart A to add a Subpart L data element used as an input to an emission equation that was inadvertently omitted in the final deferral rule.
- Other amendments related to certain issues identified as a result of working with the affected sources during rule implementation and outreach.

We are seeking public comment only on the issues specifically identified in this proposed rule for the identified subparts. We will not consider, through this notice and comment process, comments that are outside the scope of this proposed rule.

A. Subpart A—General Provisions

1. Background

In today's rule, we are proposing a few minor amendments to the general reporting requirements of 40 CFR 98.3(c)(4) of subpart A. These changes relate to reporters that would be reporting under the electronics manufacturing source category (40 CFR part 98, subpart I; hereinafter referred to as ''subpart I''). We are also proposing an amendment to Table A–7 to subpart A to add a Subpart L data element used as an input to an emission equation that was inadvertently omitted in the final deferral rule.

For subpart I, the proposed change clarifies the GHGs that should be reported in the annual GHG report (40 CFR 98.3(C)(4)). This proposed change follows the amendments to reporting requirements for heat transfer fluids (fluorinated HTFs) that were published on February 22, 2012 (77 FR 10373). In that rule, the EPA amended the definition of fluorinated HTFs to specify that the lower vapor pressure limit clause in the subpart A definition of fluorinated GHG did not apply to fluorinated HTFs in subpart I beginning in reporting year 2012 (40 CFR 98.98).

2. Proposed Amendments

Section 98.3(c)(4) of subpart A specifies the types of data and format for reporting emissions in the annual GHG reports (e.g., annual emissions from each source category by GHG). Without the proposed change to conform the subpart I requirements for fluorinated HTFs with subpart A, reporters are required to calculate emissions of fluorinated HTFs under subpart I but report only a subset of them in their annual report totals under subpart A. The proposed amendment to subpart A specifies that facilities subject to subpart I must include all fluorinated HTFs in the computation of CO_2e that is required by 40 CFR 98.3(c)(4)(i). Facilities must report each fluorinated HTF that is also a fluorinated GHG under 40 CFR 98.3(c)(4)(iii)(E) and each fluorinated HTF that is not a fluorinated GHG in the newly proposed data element, 40 CFR 98.3(c)(4)(iii)(F). Today's proposed change is a harmonizing modification to clarify how facilities subject to subpart I would report the emissions from fluorinated heat transfer fluids, as required by the February 22, 2012 amendments to subpart I. The EPA determined that this change would simplify reporting for facilities and reduce burden by amending subpart A to be consistent with the requirements in subpart I.

The EPA is proposing to make this change effective for reporting year 2012. Given that facilities are already required to calculate emissions of fluorinated HTFs under subpart I, reporters will already have the necessary data to comply with the proposed amendments.

Table A–7 to subpart A of Part 98 lists the inputs to emission equations whose reporting deadlines are currently deferred until March 31, 2015. In the final deferral, the data element, ''the mass of each fluorine-containing product produced by the process'' (40 CFR 98.126(b)(7)) was inadvertently omitted from Table A–7 of subpart A. This data element is an input to an equation because it is used in Equation L–6. Thus, we are proposing to amend Table A–7 to subpart A to include this input and hence, defer its reporting deadline until March 31, 2015.

3. Overview and Approach to Proposed CBI Determinations

The proposed changes to subpart A do not affect the proposed confidentiality determinations for subpart A or I data elements or the proposed deferral of the deadline for reporting inputs to emission equations (February 22, 2012, 77 FR 10434; Mandatory Reporting of Greenhouse Gases Rule: Confidentiality Determinations and Best Available Monitoring Methods Provisions, hereinafter referred to as the ''February 22, 2012 CBI rule'').

As discussed in Section II.A.2 of this preamble, the EPA is proposing to add a data element in Subpart A (98.3(c)(4)(iii)(F)). This additional data element is a harmonizing change that makes the subpart A requirements consistent with the recently finalized February 22, 2012 subpart I amendments. To that end, the information that would be reported under the proposed new data element in subpart A is a subset of the information to be reported under the data element 98.96(c)(4), which the EPA proposed to be non-confidential by assigning it to the ''Emissions'' category in a recent action.[6] Since the information proposed under Subpart A in today's action is a subset of the information to be reported under 98.96(c)(4), the confidentiality determination proposed for that subpart I data element applies to the subpart A data element proposed in this action. As a result, we are not proposing a confidentiality determination for the new subpart A data element in this action.

B. Subpart TT—Industrial Waste Landfills

1. Background

In this action we are proposing one correction to the provisions of subpart TT to exclude certain facilities that only receive inert waste from reporting requirements under the GHG Reporting Rule. This proposed amendment would ensure that landfills that are not expected to emit GHGs are excluded from reporting requirements under this subpart.

2. Proposed Amendment

We are proposing one technical amendment to subpart TT to address questions received about applicability of the subpart to industrial waste landfills that receive only inert wastes. In subpart TT, the volatile solids concentration is used as a surrogate for determining degradable organic carbon (DOC) content of a waste material [40 CFR 98.464(b)(4)(ii)]. In 40 CFR 98.460(c)(xii), the EPA provides an exclusion for those facilities that receive inert waste materials ''with a volatile solids concentration of 0.5 weight percent (on a dry basis) or less.'' However, some landfill owners or operators test their waste stream to determine directly waste-specific degradable organic content. These tests, when performed as described in 40 CFR 98.464(b)(4)(i)(A) of the rule, can provide a more accurate DOC value than calculating organic content from volatile

[6] See 77 FR 10434, February 22, 2012.

solids. Therefore, to ease reporting burden on those facilities that receive inert waste but calculate DOC directly, we propose to add a direct DOC value exclusion as 40 CFR 98.460(c)(2)(xiii). This exclusion would be provided in weight percent on a wet basis because this is consistent with the units for DOC.

3. Overview and Approach to Proposed CBI Determinations

This proposed amendment to subpart TT is not expected to affect the proposed confidentiality determinations for subpart TT data elements or the proposed deferral of the deadline for reporting of inputs to emission equations (January 10, 2012, 77 FR 1434; Proposed Confidentiality Determinations for Data Elements Under the Mandatory Reporting of Greenhouse Gases Rule and Amendments to Table A–6 to Subpart A of Part 98, of the Greenhouse Gas Reporting Rule, hereinafter referred to as the January 10, 2012 CBI rule.)

C. Subpart W—Petroleum and Natural Gas Systems

1. Background

In this action, the EPA is proposing minor corrections and clarifying amendments to certain provisions to assist facilities with implementing existing rule requirements. We are proposing technical corrections to provisions in subpart W for calculating and reporting greenhouse gas emissions, as well as several emission factors in associated tables. Since publication of subpart W in November 2010, the EPA amended subpart W on December 23, 2011, (76 FR 80554). That notice included technical corrections and clarifications designed to increase flexibility, provide needed clarification regarding applicability, and to address specific errors in equations and citations. This proposal complements that action and is not intended to duplicate or replace the amendments published on December 23, 2011.

Many of the corrections in the December 23, 2011 action were the result of internal review by the EPA, as in the case of the correction to the calculation methodology for estimating emissions from gas well venting during completions and workovers using hydraulic fracturing. Onshore petroleum and natural gas facilities subject to subpart W are required to report emissions resulting from this emission source using one of three methods in the December 23, 2011 rule. The first method relies on installation of a recording flow meter on the vent line (upstream of a flare or vent if used) to measure the flowback rate for representative wells in each gas producing sub-basin category and well type combination. The second method is based on engineering equations to calculate the well flowback during well completions and workovers from hydraulic fracturing. The last method applies to facilities that are already measuring the flowback volumes during gas well completions or workovers within a given sub-basin and well type combination.

Following the EPA's review of this emission source, and method two in particular, we determined that correction was needed to Equations W–11A and W–11B to convert the resultant flow rate (parameter FR) into standard conditions instead of the resultant actual conditions as written. Without this conversion, the calculated flow volumes in Equations W–11A and W–11B would incorrectly result in actual conditions instead of standard conditions, which is necessary for input into Equations W–12 and W–10A. In this action, the EPA is proposing to include a correction to convert the flow rate determined in Equation W–11A and W–11B to standard conditions through the use of Equation W–33.

2. Proposed Technical Corrections

EPA is proposing several technical corrections and amendments to subpart W to correct equations and otherwise clarify provisions in the rule to ensure consistency across the calculation, monitoring, and reporting requirements in subpart W and thereby facilitate reporting.

This section describes the EPA's proposed corrections for subpart W.

Calculating Greenhouse Gas Emissions. The EPA is proposing several clarifications, corrections, and amendments throughout 40 CFR 98.233. These proposed changes are intended to clarify terms, correct references, and remove extraneous terms.

Dehydrator Vents. The EPA is proposing to amend Equation W–6 in 40 CFR 98.233(e)(5) by removing a factor of 1000 from the denominator so that the calculated emissions will result in standard cubic feet rather than thousand standard cubic feet.

Well Venting for Liquids Unloading. The EPA is proposing to provide reporters with the option to take and use more than the prescribed number of sample measurements per unique well tubing diameter and pressure group combination per sub-basin. The EPA notes that this would not change the burden to reporters, and still only would require that one sample per unique well tubing diameter and pressure group combination be taken, but would allow reporters to account for any additional samples that they may have already taken.

The EPA is proposing to amend Equation W–7 in 40 CFR 98.233(f)(1) by changing the parameter ''FR_p'' to ''FR'' in both Equation W–7 and in the definition to avoid confusion. As previously written, the equation could be interpreted to imply that the flow rate should be measured for all wells, as ''p'' refers to all wells in a pressure group and tubing group combination; rather, the intention of the equation is to calculate the flow rate for at least one well in each tubing and pressure group combination within a sub-basin. Removing the subscript ''p'' from the parameter and revising the parameter definition accordingly clarifies that the measurement is not for all wells. Also in Equation W–7, the EPA is proposing to amend the parameter T_p and its definition to clarify that it refers to the cumulative amount of time in hours for venting of each well as opposed to the time for the well(s) that were measured.

The EPA is proposing to update Equation W–8 in 40 CFR 98.233(f)(2) by revising the definition of parameter SP_p to clarify that the reporter must take a ratio of casing to tubing pressure. The EPA is further updating Equation W–8 and also Equation W–9 in 40 CFR 98.233(f)(3) by replacing the subscript ''q'' with ''p'' in parameter SFR to match the definition of parameter SFR_p. Finally, for Equations W–8 and W–9, the EPA is clarifying that the terms Vp and HRp,q are to be monitored per unloading event.

Gas Well Venting During Completions and Workovers from Hydraulic Fracturing. The EPA reviewed Equation W–11A, which calculates a flow rate for subsonic flow, and Equation W–11B, which calculates a flow rate for sonic flow. These equations are intended to calculate flow of gas following hydraulic fracturing of gas wells through a choke at the wellhead. The EPA determined that the equations as presented in the final rule are correct. However, it may not be clear in the December 2011 final rule that the output from Equations W–11A and W–11B are at actual conditions, i.e., subsonic and sonic flow conditions and that a conversion of the results from Equation W–11A and W–11B to standard conditions is required prior to use in Equation W–12. Omitting the step of converting actual to standard conditions results in a lower flowrate output from Equation W–11A or Equation W–11B, which corresponds to a lower emissions calculation in Equation W–10A. In this

proposed rule, EPA proposes to add a reference to 40 CFR 98.233(t) in the parameter definition $FR_{s,p}$ to convert FR_a to standard conditions. Furthermore, to eliminate this potential ambiguity and make the equations more explicit, the EPA is proposing to insert the word ''actual'' in the definition of flow rate, FR, and also add a subscript ''a.'' Finally, EPA proposes to clarify the definition of orifice cross sectional area, ''A'' to state ''Cross sectional open area of the restriction orifice (m^2).''

The EPA is proposing to clarify that the flow volume variable $FV_{s,p}$ in Equation W–10B is at standard cubic feet, which is a volume unit as opposed to the standard cubic feet per hour flow rate unit in the December 2011 final rule. Although the engineering equations in subpart W more commonly use flow rates as units of measurement, the use of flow volumes in equation W–10B is similar to the use of flow volume in 40 CFR 98.233(n), which includes provisions for reporters to calculate their flow volumes in standard cubic feet as opposed to a cubic feet per hour flow rate value.

Finally, the EPA is proposing to provide reporters with the option to take and use more than the prescribed number of sample measurements per sub-basin and well type (horizontal or vertical). As described above for a similar proposed amendment for well venting for liquids unloading, the EPA notes that this would not change the burden to reporters, but would allow reporters to account for any additional samples that they may have already taken.

Gas Well Venting During Completions and Workovers Without Hydraulic Fracturing. The EPA is proposing amendments to clarify that the output of Equation W–13 is a sum of emissions from all completions and workovers without hydraulic fracturing within a sub-basin.

Blowdown Vent Stacks. The EPA is proposing to revise the nomenclature of two terms in Equations W–14A and W–14B. First, the EPA is revising the parameter ''$E_{s,n}$'' in the parameter description to match the term in the Equation W–14B. Second, the EPA is revising the term ''T_a'' to ''$T_{a,p}$'' in Equation W–14B to clarify the intent of the equation, which allows the reporter to input the temperature in actual conditions for each blowdown event ''p.''

Onshore Production Storage Tanks. The EPA is proposing to revise 40 CFR 98.233(j)(5) to clarify that the term ''throughput'' refers to ''average daily throughput of oil'' consistent with similar changes made elsewhere in 40 CFR 98.233(j) during the December 23, 2011 technical corrections final rule. The EPA is also proposing to revise the definition of ''Count'' in Equation W–15 of 40 CFR 98.233(j)(5) to clarify that the reporters are to only count the separators or wells that feed oil directly to the storage tank. The count should not include separators that feed oil to other separators. The EPA is also proposing to revise the parameter definition of ''1000'' to accurately describe the conversion occurring through this parameter.

Well Testing Venting and Flaring. The EPA is proposing to revise the definition of ''PR'' in Equation W–17B of 40 CFR 98.233(l)(3) to clarify that the production rate is in actual and not standard conditions.

Flare Stack Emissions. The EPA is proposing to remove and reserve 40 CFR 98.233(n)(7) to harmonize the language with the reporting requirements in 40 CFR 98.236, which requires emissions to be reported separately for combusted CO_2, uncombusted CO_2, and uncombusted CH_4. This deletion would remove an undesired calculation.

Centrifugal and Reciprocating Compressors. The EPA is proposing to make technical corrections to Equations W–23, W–24, W–27, and W–28 to provide the proper notation for the summations in those equations so that owners and operators may correctly calculate GHG emissions from centrifugal and reciprocating compressors. Although EPA recognizes that additional clarifications to the definitions in the parameters to these equations could be helpful to owners and operators, the EPA has not proposed any substantive changes in this action. This is because, following the publication of subpart W in the **Federal Register** in 2010, several industry groups requested reconsideration of several provisions in the final rule, including the reciprocating and centrifugal compressor monitoring requirements. At present, we are merely making technical corrections to the existing equations in the rule, and are not granting reconsideration of the compressor requirements or any other issues raised in those petitions for reconsideration in this action. We will consider the compressor monitoring requirements at a later time.

Finally, the EPA is proposing to revise the definition of parameter EF_i in Equation W–25 in 40 CFR 98.233(o)(7) by deleting the term ''thousand'' to eliminate an unnecessary unit conversion.

Population Count and Emission Factors. We are also proposing to amend an incorrect reference in 40 CFR 98.233(r)(2) to ''Table W–1A'' to Subpart A of Part 98 instead of ''Table 1–A.''

Finally, in 40 CFR 98.233(r)(6)(ii), we are proposing to revise the term ''meter or regulator'' and replace it with ''meter/regulator,'' for consistency with the term prescribed in the definition in 40 CFR 98.238.

Volumetric emissions. The EPA is proposing to revise 40 CFR 98.233(t) to clarify that reporters do not need to alter their calculation results to standard conditions if the results already reflect standard conditions.

GHG mass emissions. The EPA is proposing to revise the definition of parameter ''ρ_i'' in Equation W–36 to amend the density value of CH_4 to be 0.0192 kg/ft^3 in Equation W–36. The current density value of 0.04220 is the density of CH_4 in lb/ft^3. In the required units of kg/ft^3, the density value for CH_4 should be 0.0192 kg/ft^3.

Onshore Production and Distribution Combustion Emissions. The EPA is proposing to replace the parameter ''ECO_2'' with ''$E_{a,CO2}$'' in the parameter definition for Equation W–39A in 40 CFR 98.233(z)(2)(iii) to match the parameters in the equation. Finally, the EPA is proposing to revise the definition of ''HHV'' in 40 CFR 98.233(z)(2)(vi) to reflect the correct term represented by the acronym.

Data Reporting Requirements. The EPA is proposing amendments to specific provisions within 40 CFR 98.236. These changes are intended to clarify terms, correct references, and remove extraneous terms.

First, the EPA is proposing to amend 40 CFR 98.236(c)(5)(ii)(D) to clarify that the average internal casing diameter of all wells, as opposed to each well, must be reported.

Second, we propose to amend 40 CFR 98.236(c)(9) by removing the text, ''using optical gas imaging instrument per 40 CFR 98.234(a) (refer to 40 CFR 98.233(k)), or acoustic leak detections of.'' This is because 40 CFR 98.233(k) allows the use of several monitoring methods for determining tank vapor vent stack emissions. The text in 40 CFR 98.236(c)(9) limits the reporters to optical gas imaging and acoustic leak detection, which is misleading.

The EPA is also proposing to amend 40 CFR 98.236(c)(13)(iii)(C) to correct for an error in the units associated with emissions from isolation valve leakage for centrifugal compressors measured using provisions in 40 CFR 98.233. Specifically, EPA is proposing to replace the units of ''cubic feet per hour'' with ''metric tons of CO_2e for each gas'' to align the units of this data reporting element to those of the general

provisions of Part 98, 40 CFR 98.3(c)(4)(i), which require reporting of annual emissions in units of mass in metric tons of CO_2e. EPA seeks comment on this proposed amendment to correct the units for this data reporting element.

Next, the EPA is proposing to amend 40 CFR 98.236(c)(15)(i)(B) by updating the incorrect reference to ''Equation W–30'' to read ''Equation W–30A.'' Similarly, the EPA is proposing to amend 40 CFR 98.236(c)(15)(i)(C) by updating the incorrect reference to Equation W–30 to read Equation W–30A. In 40 CFR 98.236(c)(15)(i)(C), the EPA proposes to delete the unnecessary reference to ''parameter GHGi.''

In 40 CFR 98.236(c)(15)(ii)(A), the EPA is proposing to remove the text references to ''(a)(4)'' and ''W–3'' because the reporting requirements for pneumatic devices are already covered under 40 CFR 98.236c)(1) and making this reference unnecessary. Similarly, the EPA is proposing to delete the reference to ''(a)(8)'' because the reporting requirements for population counts in the natural gas distribution industry segment are already covered under 40 CFR 98.236(c)(16).

Finally, the EPA is proposing to delete ''and CH_4'' from the reporting requirements for EOR injection pumps in 40 CFR 98.236(c)(17)(v). The EPA clarified through the December 23, 2011 final rule that only CO_2 emissions must be calculated from EOR injection pump blowdowns (76 FR 80565). Although the calculation requirements were clarified in that rule, the harmonizing change was not made to remove CH_4 from the data reporting requirements. This proposed change would make the data reporting requirements consistent with the calculation procedures in Equation W–37.

Emission Factor Tables. First, we are proposing to revise the incorrect title of Table W–1A of subpart W by deleting ''Table A–1A'' and correcting it to ''Table W–1A.''

In the December 2011 technical corrections final rule (76 FR 80592), the emission factors were converted from a standard temperature of 68 °F to a standard temperature of 60 °F. The EPA inadvertently used an incorrect intermediary version of Table W–1A to convert the emission factor. In this proposed rule, the EPA is proposing to rectify the emission factors in Table W–1A using the correct version of Table W–1A from the November 2010 rule. We note that the EPA did receive technical comments on the actual default emission factor values in Table W–1A in the December 2011 technical corrections final rule (see the Response to Comments document for the final rule, comment number EPA–HQ–OAR–2011–0147–0016, Excerpt 30). This proposed action merely proposes to correct the error that resulted in December 2011 from use of an incorrect intermediary table when the emission factors were converted from a standard temperature of 68 °F to a standard temperature of 60 °F. As stated in the Response to Comments document referenced above, the EPA may consider substantive changes to the default factors for future rulemakings.

The EPA made changes to the emission factors for the Eastern United States in December 2011 as result of comments on the calculation performed to derive these numbers. Similar changes were required for the pneumatic devices in the Western United States but were inadvertently not made in the December 2011 final rule. Therefore, the EPA is proposing to make a similar change to the pneumatic device emission factors for the Western United States.

Finally, we are proposing to amend Table W–5 to provide the cross-reference for footnote 2, by adding a reference associated with footnote 2 to Vapor Recovery Compressor.

3. Overview and Approach to Proposed CBI Determinations

In this action, the EPA is proposing a small number of revisions to the data reporting requirements affecting subpart W reporters. Specifically, in this action, the EPA is proposing to make the following amendments:

- 40 CFR (c)(5)(ii)(D) to clarify that the average internal casing diameter must be reported for all wells, as opposed to each well.
- 40 CFR 98.236(c)(9) to align the reporting requirements with the corresponding calculation methodologies in 40 CFR 98.233(k) by removing erroneous text.
- 40 CFR 98.236(c)(13)(iii)(C) to correct the units of the reporting requirements.
- 40 CFR 98.236(c)(15)(i)(B) and (C) to remove incorrect references and citations.
- 40 CFR 98.236(c)(15)(ii)(A) to remove unnecessary text which if not removed results in redundancy for reporters.
- 40 CFR 98.236(c)(17)(v) to remove reporting of CH4 to make the reporting requirements consistent with the calculation procedures.

For these data elements, the EPA proposed confidentiality determinations (for non-inputs), and deferral of reporting (for inputs) in a proposed action, Proposed Confidentiality Determinations for the Petroleum and Natural Gas Systems Source Category, and Amendments to Table A–7 of the Greenhouse Gas Reporting Rule, published on February 24, 2012 (77 FR 11039). These five amendments are minor clarifications that do not change the general meaning of the data elements and therefore would not affect the determinations or deferrals proposed in that action.

D. Subpart L—Fluorinated Gas Production

1. Background

In today's rule, we are proposing that greenhouse gas emissions be reported in a less detailed manner for the initial two years of reporting under subpart L. The proposed changes pertain only to subpart L, and would be a temporary change (i.e., for reporting years 2011 and 2012) to allow the EPA sufficient time to fully evaluate concerns recently raised by stakeholders that reporting and public availability of process-specific emissions of individual fluorinated GHGs may reveal trade secrets. Under subpart L, fluorinated gas producers are currently required to report greenhouse gas emissions by chemical for each process.[7]

On January 10, 2012, the EPA published proposed determinations regarding whether the Greenhouse Gas Reporting Program data elements in eight subparts of Part 98, including subpart L, would or would not be entitled to confidential treatment under the CAA (77 FR 1434). In that proposed rule, the EPA proposed that the chemical identities and quantities of the fluorinated GHG emissions at the process-level, reported under subpart L, are ''emission data.'' Under section 114 of the CAA, ''emission data'' are not eligible for confidential treatment.

Two commenters on that proposed rule, the American Chemistry Council and 3M Company, raised concerns that the release of certain data elements that the EPA proposed to classify as emission data, and that therefore would not be eligible for treatment as confidential business information, would reveal trade secrets. 3M noted that, due to the uniqueness of its production processes, it may be the only U.S. producer of fluorinated gases that

[7] Greenhouse gas emissions are currently required to be reported by chemical for each fluorinate gas production process, each fluorinated gas transformation process that is not part of a fluorinated gas production process, each fluorinate gas destruction process that is not part of a fluorinated gas production or transformation process, and venting of residual fluorinated GHGs (heels) from containers returned from the field (40 CFR 98.126(a)(2)).

has these trade secret concerns. No other producer of fluorinated gases individually raised these concerns in either the subpart L or CBI rulemakings. Both commenters stated that the disclosure of the identity and quantities of the fluorinated GHGs emitted at the process level, from either process vents or fugitive sources, would reveal sensitive information regarding individual chemical production processes. 3M stated that process-level emission data contain specific information on reactants, byproducts, and products that would provide competitors with a detailed understanding of 3M's manufacturing process. They noted that competitors with knowledge of fluorine chemistry could use such information to identify the particular manufacturing pathways used by 3M. Competitors could then duplicate these processes without having to incur research and development costs, placing 3M at a competitive disadvantage.

The American Chemistry Council and 3M Company also expressed concern that the disclosure of the identity and quantity of emissions at the process level could violate export control regulations. Specifically, the commenters stated that the release of some data elements would make public information that is subject to Export Administration Regulations (EAR) and International Traffic in Arms Regulations (ITAR) that prohibit public disclosure for reasons of ''national security, anti-terrorism, nuclear non-proliferation, and chemical and biological weapons security.'' The commenters stated that the federal regulations not only control export of products, but also export of technical knowledge, such as the design of a product and production information, and that the release of process-level emission data may provide such insight into the design of a product or production information that is export controlled. The commenters stated that if the EPA attempted to protect export-controlled information from disclosure by implementing ''an export control plan,'' this would be in conflict with its position that emission data cannot be withheld from the public under the CAA.

EPA needs additional time to fully evaluate whether these concerns are justified and how the rule might be changed to balance these concerns with the need to obtain the data necessary to inform the development of future GHG policies and programs. Specifically, EPA needs additional time to consider these comments, better understand whether the concerns raised are unique to one facility/manufacturer, and evaluate whether a two-track approach with different levels of reporting for different facilities would be feasible. Memorandum: Potential Future Subpart L Options in the docket to this rulemaking (EPA–HQ–OAR–2011–0147) describes some possible alternative reporting frameworks. EPA is currently in the process of evaluating whether the potential options described in the memorandum would generate an adequate data set upon which to inform the development of future GHG policies and programs. We seek comment on whether the options presented would address the concerns raised by commenters. Although EPA is seeking comment on the alternatives presented in this memorandum, any changes to Part 98 would be made through a separate proposed action, including accompanying proposed regulatory text changes. That proposal, should there be one, would also include proposed confidentiality determinations for any long-term proposed changes to the reporting requirements in subpart L.

2. Proposed Amendments

The EPA needs additional time to fully evaluate whether these concerns are warranted. As a result, we are proposing amendments that would apply for only reporting years 2011 and 2012 to allow the EPA sufficient time to evaluate these concerns, and if needed, to make permanent changes to the rule. We are proposing a new reporting element for reporting years 2011 and 2012, where owners and operators of facilities producing fluorinated gases would be required to report annual total facility-wide fluorinated GHG emissions, expressed in tons of CO_2e.[8] The facilities would not be required to report process level emissions or individual fluorinated GHGs for reporting years 2011 and 2012. These amendments would apply to subpart L only. These proposed amendments do not change any other requirements of Part 98, including the requirement that these data elements be retained as records in a form that is suitable for expeditious inspection and review (required for all Part 98 records by 40 CFR 98.3(g)).

This proposed action would not have any impact on the EPA's final rule issued on August 25, 2011 (76 FR 53057), which deferred the deadline for reporting subpart L data elements that are inputs to emission equations until March 31, 2015. The data elements listed in that action for which the reporting deadline was deferred until March 31, 2015 are still deferred until that date. For the data elements listed below, we are proposing in this action, that owners and operators of facilities producing fluorinated gases would not be required to submit the information until March 31, 2014 (unless the deferral of inputs action mentioned previously has already set forth a deferred reporting deadline of March 31, 2015).

- 40 CFR 98.3(c)(4)(iii)
- 40 CFR 98.126 (a)(2), (a)(3), (a)(4), (a)(6),(b), (c), (d), (e), (f), (g), and (h).

The data element at 40 CFR 98.3(c)(4)(iii) is the subpart A reporting requirement that requires reporting of greenhouse gas emissions by chemical for each subpart. Again, reporting of this data element would be deferred for reporting year 2011 and reporting year 2012 for subpart L only.

With these proposed changes, fluorinated gas producers would report, under subpart L, only the data elements in 40 CFR 98.126(a)(5) (the methods used) and in proposed paragraph 40 CFR 98.126(j) (for facility-level CO_2e emissions) for reporting year 2011 and reporting year 2012. Consistent with 40 CFR 98.126(e), a facility would need to include the excess emissions, converted to CO_2e, that result from malfunctions of the destruction device when reporting total facility CO_2e under 40 CFR 98.126(j). However, as noted in 40 CFR 98.126(j), these excess emissions would not need to be reported separately but would be included in the facility-wide CO_2e reported. While reporters are still reporting 98.126(a)(5), we are proposing to amend this reporting element to require facilities to report the methods used to determine emissions at a facility-level rather than linking each method to a particular process.

We note that the data elements in 40 CFR 98.122(a) and (b) refer to reporting of GHGs under subpart C of part 98, General Stationary Fuel Combustion Sources, and the reporting of fluorinated GHGs under subpart O of part 98, HCFC–22 Production and HFC–23 Destruction, respectively, and we are not proposing to change them through this action.

To convert fluorinated GHG emissions into CO_2e, the EPA is proposing that facilities use Equation A–1 of subpart A. For fluorinated GHGs that do not have a GWP listed in Table A–1, facilities would be required either to use a default

[8] This would include emisions from all fluorinated gas production processes, all fluorinated gas transformation processes that are not part of a fluorinated gas production process, all fluorinated gas destruction processes that are not part of a fluorinated gas production process or a fluorinated gas transformation process, and venting of residual fluorinated GHGs from containers returned from the field.

GWP or to use their best estimate of the GWP, based on the information described in 40 CFR 98.123(c)(1)(vi)(A)(*3*).[9] The default GWP used would depend on the type of fluorinated GHG. For fully fluorinated GHGs, the default GWP would be 10,000, which is based on the average GWP of the fully fluorinated GHGs on Table A–1. For the purposes of subpart L, EPA is proposing to define ''fully fluorinated GHGs'' as ''fluorinated GHGs that contain only single bonds and in which all available valence locations are filled by fluorine atoms. This includes but is not limited to saturated perfluorocarbons, SF6, NF3, SF5CF3, fully fluorinated linear, branched and cyclic alkanes, fully fluorinated ethers, fully fluorinated tertiary amines, fully fluorinated aminoethers, and perfluoropolyethers.'' For other fluorinated GHGs, the default GWP would be 2,000, which is based on the average GWP of the other fluorinated GHGs on Table A–1. EPA is proposing to distinguish between fully fluorinated GHGs and other fluorinated GHGs because the former have significantly longer lifetimes and higher GWPs than the latter. EPA requests comment on the proposed definition of fully fluorinated GHGs and on the default GWPs.

We are proposing to add three new data elements that, if a facility used one or more default or best-estimate GWPs, it would be required to report the shares of its CO_2e emissions that were respectively based on the default and/or best estimate GWPs. This would enable the EPA to understand the potential impact of the default or best estimate GWPs on the overall estimated emissions of the facility. We are proposing that, facilities using best estimate GWPs be required to keep the GWPs, along with the data and analysis that were used to develop the GWPs, as records.

The EPA requests comment on the approach for assigning GWPs to fluorinated GHGs without GWPs on Table A–1. If commenters believe that another method should be used for calculating GWP values for chemicals not listed in Table A–1, they should provide details and rationale for the specific method that they recommend.

The EPA is proposing that the amendments described above apply for reporting year 2011 and reporting year 2012. Because the deadline for reporting year 2012 reporting is March 31, 2013, just six months after the reporting year 2011 reporting deadline, the EPA has determined that making these proposed amendments effective for two reporting years would allow sufficient time to fully evaluate the concerns raised as well as, if needed, make a permanent change to the rule. The EPA requests comment on whether these amendments should apply for only reporting year 2011 rather than for reporting year 2011 and reporting year 2012.

Because only one company raised concerns that reporting process-specific emissions by chemical would reveal trade secrets, the EPA is also requesting comment on giving fluorinated gas producers the option to report all of the subpart L data elements that are currently subject to a September 2012 reporting deadline. Fluorinated gas producers that have established tracking and reporting systems based on the current rule would then be able to report based on their current systems. At the same time, this approach would preserve chemical-by-chemical reporting at the process level where companies decide to report in this manner.

3. Overview and Approach to Proposed CBI Determinations

As discussed in Section II.D.2 of this preamble, the EPA is proposing amendments that would apply to subpart L for reporting years 2011 and 2012. Owners and operators would be required to report the facility's fluorinated GHG emissions only as an annual total expressed as CO_2e emissions as well as the shares of those emissions that were based on the default and/or best estimate GWPs.

The proposed amendment includes addition of these four reporting elements, which are listed below in Table 2 of this preamble.[10]

TABLE 2—PROPOSED REPORTING DATA ELEMENTS AND CONFIDENTIALITY DETERMINATIONS

Citation	Data element	Proposed data category (finalized CBI determination [11])
1. 98.126(j)(3)	You must report the total fluorinated GHG emissions of the facility, expressed in tons of CO_2e.	Emissions (Emission Data: Made available to the public).
2. 98.126(j)(3)(ii)	Provide the total annual emissions across fluorinated GHGs for the entire facility, in metric tons of CO_2e, that were calculated using the default GWP of 2000.	Emissions (Emission Data: Made available to the public).
3. 98.126(j)(3)(iii)	Provide the total annual emissions across fluorinated GHGs for the entire facility, in metric tons of CO_2e, that were calculated using the default GWP of 10,000.	Emissions (Emission Data: Made available to the public).
4. 98.126(j)(3)(iv)	Provide the total annual emissions across fluorinated GHGs for the entire facility, in metric tons of CO_2e, that were calculated using your best estimate of the GWP.	Emissions (Emission Data: Made available to the public).

In conjunction with the proposed addition of the four data elements identified above, we are proposing confidentiality determinations for these data elements. Because these four data elements describe emissions exhausted to the atmosphere, we are proposing to assign these proposed data elements to the ''Emissions'' category. These proposed data elements are exactly the same type of data (i.e., information regarding the quantity of GHG emissions to the atmosphere) as all of the other data elements previously categorized in the ''Emissions'' data category in the Final CBI rule. As mentioned above, in the Final CBI rule, the EPA determined that the data elements in this data category are ''emission data'' under CAA section 114(c) and 40 CFR 2.301(a)(2)(i). Since the proposed data elements are the same as the data elements previously finalized in the ''Emissions'' data category, we propose

[9] This is part of the provision of subpart L that allows facilities to request to use provisional GWPs to calculate whether they must use stack testing to establish an emission factor for a vent. Note that EPA is not proposing to approve best-estimate GWPs under this action.

[10] 76 FR 30782, May 26, 2011.

[11] The CBI determinations of these data categories were finalized in the Final CBI Rule (May 26, 2011, 76 FR 30782).

that the determination applied to that category also applies to these four proposed data elements, and that these data elements would not be eligible for CBI treatment.

As mentioned above, we are also proposing to amend the reporting requirement in 98.126(a)(5); however, the proposed amendment is a minor change in which facilities are reporting the methods used to determine emissions at a facility-level rather than linking each method to a particular process. Because the same information would be reported (without being linked to a particular process), this change does not affect the proposed confidentiality determination that was made for this data element in a recent proposal.12 As a result, we are not proposing a confidentiality determination for this data element.

III. Statutory and Executive Order Reviews

A. Executive Order 12866: Regulatory Planning and Review and Executive Order 13563: Improving Regulation and Regulatory Review

This action is not a ''significant regulatory action'' under the terms of Executive Order 12866 (58 FR 51735, October 4, 1993) and is therefore not subject to review under Executive Orders 12866 and 13563 (76 FR 3821, January 21, 2011).

B. Paperwork Reduction Act

This action does not impose any new information collection burden. These proposed amendments do not make any substantive changes to the reporting requirements in any of the subparts for which amendments are being proposed. In many cases, the proposed amendments could potentially reduce the reporting burden by making the monitoring and reporting requirements more clear and to more closely conform to industry practices. However, the OMB has previously approved the information collection requirements for subparts A on October 30, 2009, subpart L on December 1, 2010, subpart W promulgated on November 30, 2010, subpart TT promulgated on July 12, 2010 under 40 CFR part 98 under the provisions of the Paperwork Reduction Act, 44 U.S.C. 3501 et seq., and has assigned OMB control numbers 2060–0629; 2060–0650; and 2060–0647; and 2060–0649 respectively. The OMB control numbers for the EPA's regulations in 40 CFR are listed in 40 CFR part 9.

Further information on the EPA's assessment on the impact on burden can be found in the 2012 Technical Corrections and Amendments Cost Memo in docket number EPA–HQ–OAR–2011–0147.

C. Regulatory Flexibility Act (RFA)

The RFA generally requires an agency to prepare a regulatory flexibility analysis of any rule subject to notice and comment rulemaking requirements under the Administrative Procedure Act or any other statute unless the agency certifies that the rule will not have a significant economic impact on a substantial number of small entities. Small entities include small businesses, small organizations, and small governmental jurisdictions.

For purposes of assessing the impacts of this proposed rule on small entities, small entity is defined as: (1) A small business as defined by the Small Business Administration's regulations at 13 CFR 121.201; (2) a small governmental jurisdiction that is a government of a city, county, town, school district or special district with a population of less than 50,000; and (3) a small organization that is any not-for-profit enterprise which is independently owned and operated and is not dominant in its field.

After considering the economic impacts of these proposed rule amendments on small entities, I certify that this action will not have a significant economic impact on a substantial number of small entities. The proposed rule amendments will not impose any new requirement on small entities that are not currently required by the regulation of subpart A promulgated on October 30, 2009; subpart TT promulgated on July 12, 2010; subpart W promulgated on November 30, 2010, or subpart L promulgated on December 1, 2010.

Based on the proposed amendments in his action, the EPA has provided clarity to address ambiguity in the rule provisions, and has proposed corrections where necessary to assist reporters in implementation of these subparts.

Further, the EPA took several steps to reduce the impact of 40 CFR part 98 on small entities when developing the final GHG reporting rules in 2009 and 2010. For example, the EPA determined appropriate thresholds that reduced the number of small businesses reporting. In addition, the EPA conducted several meetings with industry associations to discuss regulatory options and the corresponding burden on industry, such as recordkeeping and reporting. Finally, the EPA continues to conduct significant outreach on the GHG reporting program and maintains an ''open door'' policy for stakeholders to help inform the EPA's understanding of key issues for the industries.

D. Unfunded Mandates Reform Act (UMRA)

The proposed rule amendments do not contain a Federal mandate that may result in expenditures of $100 million or more for State, local, and tribal governments, in the aggregate, or the private sector in any one year. Thus, the proposed rule amendments are not subject to the requirements of section 202 and 205 of the UMRA. This rule is also not subject to the requirements of section 203 of UMRA because it contains no regulatory requirements that might significantly or uniquely affect small governments. The proposed amendments will not impose any new requirements that are not currently required for 40 CFR part 98, and the rule amendments would not unfairly apply to small governments. Therefore, this action is not subject to the requirements of section 203 of the UMRA.

E. Executive Order 13132: Federalism

This action does not have federalism implications. It will not have substantial direct effects on the States, on the relationship between the national government and the States, or on the distribution of power and responsibilities among the various levels of government, as specified in Executive Order 13132. For a more detailed discussion about how Part 98 relates to existing state programs, please see Section II of the preamble to the final Greenhouse Gas Reporting Rule (74 FR 56266, October 30, 2009).

These amendments apply directly to facilities that supply certain products that would result in GHGs when released, combusted or oxidized and facilities that directly emit greenhouses gases. They do not apply to governmental entities unless the government entity owns a facility that directly emits GHGs above threshold levels (such as a landfill), so relatively few government facilities would be affected. This regulation also does not limit the power of States or localities to collect GHG data and/or regulate GHG emissions. Thus, Executive Order 13132 does not apply to this action.

Although section 6 of Executive Order 13132 does not apply to this action, the EPA did consult with State and local officials or representatives of State and local governments in developing subparts A on October 30, 2009; subpart TT promulgated on July 12, 2010; subpart W promulgated on November 30, 2010; and subpart L promulgated on December 1, 2010. A summary of the EPA's consultations with State and local

governments is provided in Section VIII.E of the preamble to the 2009 final rule.

In the spirit of Executive Order 13132, and consistent with EPA policy to promote communications between EPA and State and local governments, the EPA specifically solicits comment on this proposed action from State and local officials.

F. Executive Order 13175: Consultation and Coordination With Indian Tribal Governments

This action does not have tribal implications, as specified in Executive Order 13175 (65 FR 67249, November 9, 2000). The proposed rule amendments would not result in any changes to the current requirements of 40 CFR part 98. Thus, Executive Order 13175 does not apply to this action.

Although Executive Order 13175 does not apply to this action, the EPA sought opportunities to provide information to Tribal governments and representatives during the development of the rules for subparts A on October 30, 2009; subpart TT promulgated on July 12, 2010; subpart W promulgated on November 30, 2010, and subpart L promulgated on December 1, 2010. A summary of the EPA's consultations with Tribal officials is provided Sections VIII.E and VIII.F of the preamble to the 2009 final rule and in Section IV.F of the final rule for subpart W.

G. Executive Order 13045: Protection of Children from Environmental Health Risks and Safety Risks

The EPA interprets Executive Order 13045 (62 FR 19885, April 23, 1997) as applying only to those regulatory actions that concern health or safety risks, such that the analysis required under section 5–501 of the Executive Order has the potential to influence the regulation. This action is not subject to Executive Order 13045 because it does not establish an environmental standard intended to mitigate health or safety risks.

H. Executive Order 13211: Actions That Significantly Affect Energy Supply, Distribution, or Use

This action is not subject to Executive Order 13211 (66 FR 28355, May 22, 2001), because it is not a significant regulatory action under Executive Order 12866.

I. National Technology Transfer and Advancement Act

Section 12(d) of the National Technology Transfer and Advancement Act of 1995 (NTTAA), Public Law 104–113 (15 U.S.C. 272 note) directs the EPA to use voluntary consensus standards in its regulatory activities unless to do so would be inconsistent with applicable law or otherwise impractical. Voluntary consensus standards are technical standards (e.g., materials specifications, test methods, sampling procedures, and business practices) that are developed or adopted by voluntary consensus standards bodies. NTTAA directs the EPA to provide Congress, through OMB, explanations when the EPA decides not to use available and applicable voluntary consensus standards.

This proposed rulemaking does not involve technical standards. Therefore, the EPA is not considering the use of any voluntary consensus standards.

J. Executive Order 12898: Federal Actions To Address Environmental Justice in Minority Populations and Low-Income Populations

Executive Order 12898 (59 FR 7629, February 16, 1994) establishes Federal executive policy on environmental justice. Its main provision directs Federal agencies, to the greatest extent practicable and permitted by law, to make environmental justice part of their mission by identifying and addressing, as appropriate, disproportionately high and adverse human health or environmental effects of their programs, policies, and activities on minority populations and low-income populations in the United States.

The EPA has determined that this proposed rule will not have disproportionately high and adverse human health or environmental effects on minority or low-income populations because it does not affect the level of protection provided to human health or the environment because it is a rule addressing information collection and reporting procedures.

List of Subjects in 40 CFR Part 98

Environmental protection, Administrative practice and procedure, Greenhouse gases, Suppliers, Reporting and recordkeeping requirements.

Dated: May 11, 2012.

Lisa P. Jackson,

Administrator.

For the reasons stated in the preamble, title 40, chapter I, of the Code of Federal Regulations is proposed to be amended as follows:

PART 98—[AMENDED]

1. The authority citation for part 98 continues to read as follows:

Authority: 42 U.S.C. 7401 *et seq.*

Subpart A—[Amended]

2. Section 98.3 is amended by:

a. Revising paragraph (c)(4)(i).

b. Revising paragraph (c)(4)(iii)(E).

c. Adding paragraph (c)(4)(iii)(F).

d. Revising paragraph (c)(4)(vi).

The revisions read as follows:

§ 98.3 What are the monitoring, reporting, recordkeeping and verification requirements of this part?

* * * * *

(c) * * *

(4) * * *

(i) Annual emissions (excluding biogenic CO_2) aggregated for all GHG from all applicable source categories, expressed in metric tons of CO_2e calculated using Equation A–1 of this subpart. For electronics manufacturing (as defined in § 98.90), starting in reporting year 2012 the CO_2e calculation must include each fluorinated heat transfer fluid (as defined in § 98.98) whether or not it is also a fluorinated GHG.

* * * * *

(iii) * * *

(E) Each fluorinated GHG (as defined in § 98.6), including those not listed in Table A–1 of this subpart.

(F) For electronics manufacturing (as defined in § 98.90), each fluorinated heat transfer fluid (as defined in § 98.98) that is not also a fluorinated GHG as specified under (c)(4)(iii)(E). This requirement applies beginning in reporting year 2012.

* * * * *

(vi) When applying paragraph (c)(4)(i) of this section to fluorinated GHGs and fluorinated heat transfer fluids, calculate and report CO_2e for only those fluorinated GHGs and fluorinated heat transfer fluids listed in Table A–1 of this subpart.

* * * * *

3. Table A–7 to subpart A of part 98 is amended by revising the entries for subpart L to read as follows:

TABLE A–7 TO SUBPART A OF PART 98—DATA ELEMENTS THAT ARE INPUTS TO EMISSION EQUATIONS AND FOR WHICH THE REPORTING DEADLINE IS MARCH 31, 2015

Subpart	Rule citation (40 CFR part 98)	Specific data elements for which reporting date is March 31, 2015 ("All" means all data elements in the cited paragraph are not required to be reported until March 31, 2015)
*	* *	* * * *
L	98.126(b)(1)	Only data used in calculating the absolute errors and data used in calculating the relative errors.
L	98.126(b)(2)	All.
L	98.126(b)(6)	Only mass of each fluorine-containing reactant fed into the process.
L	98.126(b)(7)	Only mass of each fluorine-containing product produced by the process.
L	98.126(b)(8)(i)	Only mass of each fluorine-containing product that is removed from the process and fed into the destruction device.
L	98.126(b)(8)(ii)	Only mass of each fluorine-containing by-product that is removed from the process and fed into the destruction device.
L	98.126(b)(8)(iii)	Only mass of each fluorine-containing reactant that is removed from the process and fed into the destruction device.
L	98.126(b)(8)(iv)	Only mass of each fluorine-containing by-product that is removed from the process and recaptured.
L	98.126(b)(8)(v)	All.
L	98.126(b)(9)(i)	All.
L	98.126(b)(9)(ii)	All.
L	98.126(b)(9)(iii)	All.
L	98.126(b)(10)	All.
L	98.126(b)(11)	All.
L	98.126(b)(12)	All.
L	98.126(c)(1)	Only quantity of the process activity used to estimate emissions.
L	98.126(c)(2)	All.
L	98.126(d)	Only estimate of missing data.
L	98.126(f)(1)	All.
L	98.126(g)(1)	All.
L	98.126(h)(2)	All.
*	* *	* * * *

Subpart L—[Amended]

4. Section 98.126 is amended by:

a. Revising paragraph (a) introductory text.

b. Revising paragraph (a)(5).

c. Adding paragraph (j).

The revisions read as follows:

§ 98.126 Data Reporting Requirements.

(a) All facilities. In addition to the information required by § 98.3(c), you must report the information in paragraphs (a)(2) through (a)(6) of this section according to the schedule in paragraph (a)(1) of this section, except as otherwise provided in paragraph (j) of this section or in § 98.3(c)(4)(vii) and Table A–7 of Subpart A of this part.

* * * * *

(5) The methods used to determine the mass emissions of each fluorinated GHG, i.e., mass balance, process-vent-specific emission factor, or process-vent-specific emission calculation factor, at the facility. If you use the process-vent-specific emission factor or process-vent-specific emission calculation factor method, report the methods used to estimate emissions from equipment leaks.

* * * * *

(j) *Special Provisions for Reporting Years 2011 and 2012 Only.* For reporting years 2011 and 2012, the owner or operator of a facility must comply with paragraphs (j)(1), (j)(2), and (j)(3) of this section.

(1) *Timing.* The owner or operator of a facility is not required to report the data elements at § 98.3(c)(4)(iii) and § 98.126(a)(2), (a)(3), (a)(4), (a)(6), (b), (c), (d), (e), (f), (g), and (h) of this section until the later of March 31, 2014 or the date set forth for that data element at § 98.3(c)(4)(vii) and Table A–7 of Subpart A of this part.

(2) *Excess emissions.* Excess emissions of fluorinated GHGs resulting from destruction device malfunctions must be reflected in the reported facility-wide CO_2e emissions but are not required to be reported separately.

(3) *Calculation and Reporting of CO_2e.* You must report the total fluorinated GHG emissions covered by this subpart, expressed in metric tons of CO_2e. This includes emissions from all fluorinated gas production processes, all fluorinated gas transformation processes that are not part of a fluorinated gas production process, all fluorinated gas destruction processes that are not part of a fluorinated gas production process or a fluorinated gas transformation process, and venting of residual fluorinated GHGs from containers returned from the field. To convert fluorinated GHG emissions to CO_2e for reporting under this section, use Equation A–1 of § 98.2. For fluorinated GHGs whose GWPs are not listed in Table A–1 of Subpart A of this subpart, use either the default GWP specified below or your best estimate of the GWP based on the information described in § 98.123(c)(1)(vi)(A)(3).

(i) If you choose to use a default GWP rather than your best estimate of the GWP for fluorinated GHGs whose GWPs are not listed in Table A–1 to this subpart, use a default GWP of 10,000 for fluorinated GHGs that are fully fluorinated GHGs and use a default GWP of 2000 for other fluorinated GHGs.

(ii) Provide the total annual emissions across fluorinated GHGs for the entire facility, in metric tons of CO_2e, that were calculated using the default GWP of 2000.

(iii) Provide the total annual emissions across fluorinated GHGs for the entire facility, in metric tons of CO_2e, that were calculated using the default GWP of 10,000.

(iv) Provide the total annual emissions across fluorinated GHGs for the entire facility, in metric tons of CO_2e, that were calculated using your best estimate of the GWP.

5. Section 98.127 is amended by adding paragraph (k) to read as follows:

§ 98.127 Records that must be retained.

* * * * *

(k) For fluorinated GHGs whose GWPs are not listed in Table A–1 to this subpart, maintain records of the GWPs used to calculate facility-wide CO_2e emissions. Where you used your best estimate of the GWP, maintain records of the data and analysis used to develop that GWP, including the data elements at § 98.123(c)(1)(vi)(A)(1)–(3).

6. Section 98.128 is amended by adding the definition of ''Fully fluorinated GHGs'' in alphabetical order to read as follows:

§ 98.128 Definitions.

* * * * *

Fully fluorinated GHGs means fluorinated GHGs that contain only single bonds and in which all available valence locations are filled by fluorine atoms. This includes but is not limited to saturated perfluorocarbons, SF_6, NF_3, SF_5CF_3, fully fluorinated linear, branched and cyclic alkanes, fully fluorinated ethers, fully fluorinated tertiary amines, fully fluorinated aminoethers, and perfluoropolyethers.

* * * * *

Subpart W—[Amended]

7. Section 98.233 is amended by:

a. In paragraph (e)(5), revising Equation W–6.

b. Revising paragraph (f)(1) introductory text, Equation W–7 and, the definitions of parameters ''T_p'' and ''FR_p'' in Equation W–7.

c. Revising paragraph (f)(1)(i) introductory text and paragraph (f)(1)(i)(A).

d. In paragraph (f)(2), revising Equation W–8 and the definitions of parameters ''SP_p'', ''V_p'', and ''$HR_{p,q}$'' in Equation W–8.

e. Revising (f)(3) introductory text, Equation W–9 and the definitions of parameters ''W'', ''V_p'', and ''$HR_{p,q}$'' in Equation W–9.

f. In paragraph (g), revising Equations W–10A and W–10B and the definitions of ''FRM'', ''PR_p'', ''EnF_p'', ''SG_p'', and ''FV_p''.

g. Revising paragraph (g)(1) introductory text.

h. In paragraph (g)(1)(ii), revising Equations W–11A and W–11B, and revising the definition of ''FR'' and ''A'' in both Equations W–11A and W–11B.

i. In paragraph (g)(1)(iii), revising Equation W–12 and the definitions of ''FRM'', ''FRp'', and ''PRp''; removing the definition of ''W''; and adding the definition of ''N.''

j. Revising paragraph (g)(3)(i).

k. In paragraph (h), revising the definition of parameter ''$E_{s,n}$'' in Equation W–13.

l. In paragraph (i)(3), revising the definition of ''$E_{S,N}$'' in Equation W–14A, revising Equation W–14B and the definition of ''T_a'' in Equation W–14B.

m. Revising paragraph (j)(5) introductory text and the definitions ''Count'' and ''1,000'' in Equation W–15.

n. In paragraph (l)(3), revising the definition of ''PR'' in Equation W–17B.

o. Removing and reserving paragraph (n)(7).

p. In paragraph (o)(5), revising Equation W–23.

q. In paragraph (o)(6), revising Equation W–24.

r. In paragraph (o)(7), revising the definition of ''EF_i'' in Equation W–25.

s. In paragraph (p)(7), revising Equation W–27.

t. In paragraph (p)(7)(i), revising Equation W–28.

u. Revising paragraph (r)(2) introductory text.

v. Revising paragraph (r)(6)(ii) introductory text.

w. Revising paragraph (t) introductory text, (t)(1) introductory text, and the definition of ''$E_{s,n}$'' and ''$E_{a,n}$'' in Equation W–33.

x. In paragraph (v), revising the definition of ''ρ_i'' in Equation W–36.

y. In paragraph (z)(2)(iii), revising the definition of ''E_{CO2}'' in Equations W–39A and W–39B.

z. In paragraph (z)(2)(vi), revising the definition of parameter ''HHV'' in Equation W–40.

The revisions read as follows:

§ 98.233 Calculating GHG emissions.

* * * * *

(e) * * *

(5) * * *

$$E_{s,n} = \frac{(H*D^2*P*P_2*\%G*365days/yr)}{(4*P_1*T*100)} \qquad \text{(Eq. W-6)}$$

Where:

Es,n = Annual natural gas emissions at standard conditions in cubic feet.

H = Height of the dehydrator vessel (ft).

D = Inside diameter of the vessel (ft).

P1 = Atmospheric pressure (psia).

P2 = Pressure of the gas (psia).

P = pi (3.14).

%G = Percent of packed vessel volume that is gas.

T = Time between refilling (days).

100 = Conversion of %G to fraction.

* * * * *

(f) * * *

(1) Calculation Methodology 1. For at least one well of each unique well tubing diameter group and pressure group combination in each sub-basin category (see § 98.238 for the definitions of tubing diameter group, pressure group, and sub-basin category), where gas wells are vented to the atmosphere to expel liquids accumulated in the tubing, a recording flow meter shall be installed on the vent line used to vent gas from the well (e.g., on the vent line off the wellhead separator or atmospheric storage tank) according to methods set forth in § 98.234(b). Calculate emissions from well venting for liquids unloading using Equation W–7 of this section.

$$E_{a,n} = \sum_{p=1}^{h} T_p FR \qquad \text{(Eq. W-7)}$$

* * * * *

T_p = Cumulative amount of time in hours of venting for each well, p, of the same tubing diameter group and pressure group combination in a sub-basin during the year.

FR = Average flow rate in cubic feet per hour for all measured wells venting for the duration of the liquids unloading, under actual conditions as determined in paragraph (f)(1)(i) of this section.

(i) Determine the well vent average flow rate as specified under paragraph (f)(1)(i) of this section for at least one well in a unique well tubing diameter group and pressure group combination in each sub-basin category.

(A) The average flow rate per hour of venting is calculated for each unique tubing diameter group and pressure group combination in each sub-basin category by dividing the recorded total flow by the recorded time (in hours) for all measured liquid unloading events with venting to the atmosphere.

* * * * *

(2) * * *

$$E_{s,n} = \sum_{p=1}^{W}\left[V_p \times \left(\left(0.37\times10^{-3}\right)\times CD_p^2 \times WD_p \times SP_p\right) + \sum_{q=1}^{V_p}\left(SFR_p \times \left(HR_{p,q} - 1.0\right)\times Z_{p,q}\right)\right] \qquad \text{W-8}$$

* * * * *

SP_p = Shut-in pressure or surface pressure for wells with tubing production and no packers or casing pressure for each well, p, in pounds per square inch absolute (psia) or casing-to-tubing pressure ratio of one well from the same sub-basin multiplied by the tubing pressure of each well, p, in the sub-basin, in pounds per square inch absolute (psia).

V_p = Number of unloading events per year per well, p.

* * * * *

$HR_{p,q}$ = Hours that each well, p, was left open to the atmosphere during each unloading event, q.

* * * * *

(3) *Calculation Methodology 3.* Calculate emissions from well venting to the atmosphere for liquids unloading with plunger lift assist using Equation W–9 of this section.

$$E_{s,n} = \sum_{p=1}^{W}\left[V_p \times \left(\left(0.37\times10^{-3}\right)\times TD_p^2 \times WD_p \times SP_p\right) + \sum_{q=1}^{V_p}\left(SFR_p \times \left(HR_{p,q} - 0.5\right)\times Z_{p,q}\right)\right] \qquad \text{W-9}$$

* * * * *

W = Total number of wells with plunger lift assist and well venting for liquids unloading for each sub-basin.

* * * * *

V_p = Number of unloading events per year for each well, p.

* * * * *

$HR_{p,q}$ = Hours that each well, p, was left open to the atmosphere during each unloading event, q.

* * * * *

(g) * * *

$$E_{s,n} = \sum_{p=1}^{W}\left[T_p \times FRM_s \times PR_{s,p} - EnF_{s,p} - SG_{s,p}\right] \qquad \text{(Eq. W-10A)}$$

$$E_{s,n} = \sum_{p=1}^{W}\left[FV_{s,p} - EnF_{s,p}\right] \qquad \text{(Eq. W-10B)}$$

* * * * *

FRM_s = Ratio of flowback during well completions and workovers from hydraulic fracturing to 30-day production rate from Equation W–12.

$PR_{s,p}$ = First 30-day average production flow rate in standard cubic feet per hour of each well p, under actual conditions, converted to standard conditions, as required in paragraph (g)(1) of this section.

$EnF_{s,p}$ = Volume of CO2 or N_2 injected gas in cubic feet at standard conditions that was injected into the reservoir during an energized fracture job for each well p. If the fracture process did not inject gas into the reservoir, then EnFp is 0. If injected gas is CO2 then EnFp is 0.

$SG_{s,p}$ = Volume of natural gas in cubic feet at standard conditions that was recovered into a flow-line for well p as per paragraph (g)(3) of this section. This parameter includes any natural gas that is injected into the well for clean-up. If no gas was recovered, SGp is 0.

$FV_{s,p}$ = Flow volume of each well (p) in standard cubic feet measured using a recording flow meter (digital or analog) on the vent line to measure flowback during the completion or workover according to methods set forth in § 98.234(b).

(1) The average flow rate for flowback during well completions and workovers from hydraulic fracturing shall be determined using measurement(s) for calculation methodology 1 or calculation(s) for calculation methodology 2 described in this paragraph (g)(1) of this section. If Equation W–10A is used, the number of measurements or calculations shall be determined per sub-basin and well type (horizontal or vertical) as follows: At least one measurement or calculation for less than or equal to 25 completions or workovers; at least two measurements or calculations for 26 to 50 completions or workovers; at least three measurements or calculations for 51 to 100 completions or workovers; at least four measurements or calculations for 101 to 250 completions or workovers; and at least five measurements or calculations for greater than 250 completions or workovers.

* * * * *

(ii) * * *

$$FR_a = 1.27 * 10^5 * A * \sqrt{3430 * T_u * \left[\left(\frac{P_2}{P_1}\right)^{1.515} - \left(\frac{P_2}{P_1}\right)^{1.758}\right]} \qquad \text{(Eq. W-11A)}$$

Where:

FR_a = Average flow rate in cubic feet per hour, under actual subsonic flow conditions.

A = Cross sectional open area of the restriction orifice (m2).

* * * * *

$$FR_a = 1.27 * 10^5 * A * \sqrt{187.08 * T_u} \qquad \text{(Eq. W-11B)}$$

Where:

FR_a = Average flow rate in cubic feet per hour, under actual sonic flow conditions.

A = Cross sectional open area of the restriction orifice (m2).

* * * * *

(iii) * * *

$$FRM_s = \frac{\sum_{p=1}^{N} FR_{s,p}}{\sum_{p=1}^{N} PR_{s,p}} \qquad \text{(Eq. W-12)}$$

Where:

FRM_s = Ratio of flowback rate during well completions and workovers from hydraulic fracturing to 30-day production rate.

$FR_{s,p}$ = Measured flowback rate from Calculation Methodology 1 described in paragraph (g)(1)(i) of this section or calculated flow rate from Calculation Methodology 2 described in paragraph (g)(1)(ii) of this section in standard cubic feet per hour for well(s) p for each sub-basin and well type (horizontal or vertical) combination. Measured and calculated FRa values shall be converted from actual conditions (FRa) to standard conditions (FRs,p) for each well p using Equation W–33 in paragraph (t) of this section. You may not use flow volume as used in Equation W–10B converted to a flow rate for this parameter.

$PR_{s,p}$ = First 30-day production rate in standard cubic feet per hour for each well p that was measured in the sub-basin and well type combination.

N = Number of measured or calculated well completions or workovers using hydraulic fracturing in a sub-basin and well type formation.

* * * * *

(3) * * *

(i) Use the factor SGs,P in Equation W–10A of this section, to adjust the emissions estimated in paragraphs (g)(1) through (g)(4) of this section by the magnitude of emissions captured using purpose designed equipment that separates saleable gas from the flowback as determined by engineering estimate based on best available data.

* * * * *

(h) * * *

* * * * *

$E_{s,n}$ = Annual natural gas emissions in standard cubic feet from gas well venting during well completions and workovers without hydraulic fracturing.

* * * * *

(i) * * *

(3) * * *

* * * * *

$E_{s,n}$ = Annual natural gas venting emissions at standard conditions from blowdowns in cubic feet.

$$E_{s,n} = \sum_{p=1}^{N} \left[V \left(\frac{(459.67 + T_s)(P_{a,b,p} - P_{a,e,p})}{(459.67 + T_{a,p}) P_s} \right) \right] \qquad \text{(Eq. W-14B)}$$

* * * * *

$T_{a,p}$ = Temperature at actual conditions in the unique physical volume (°F) for each blowdown ''p''.

* * * * *

(j) * * *

(5) *Calculation Methodology 5.* For well pad gas-liquid separators and for wells flowing off a well pad without passing through a gas-liquid separator with annual average daily throughput of oil less than 10 barrels per day use Equation W–15 of this section:

* * * * *

Count = Total number of separators or wells with annual average daily throughput less than 10 barrels per day. Count only separators or wells that feed oil directly to the storage tank.

1,000 = Conversion from thousand standard cubic feet to standard cubic feet.

* * * * *

(l) * * *

(3) * * *

* * * * *

PR = Average annual production rate in actual cubic feet per day for the gas well(s) being tested.

* * * * *

(o) * * *

(5) * * *

$$E_{s,i} = EF_m * T_m * GHG_i \qquad \text{(Eq. W-23)}$$

* * * * *

(6) * * *

$$EF_m = \frac{\sum_{p=1}^{Count_m} MT_{m,p}}{Count_m} \qquad \text{(Eq. W-24)}$$

* * * * *

(7) * * *

* * * * *

EF_i = Emission factor for GHG_i. Use 1.2×10^7 standard cubic feet per year per compressor for CH_4 and 5.30×10^5 standard cubic feet per year per compressor for CO_2 at 60 °F and 14.7 psia.

* * * * *

$$E_{s,i} = EF_m * T_m * GHG_i \qquad \text{(Eq. W-27)}$$

* * * * *

(i) * * *

$$EF_m = \frac{\sum_{p=1}^{Count_m} MT_{m,p}}{Count_m} \qquad \text{(Eq. W-28)}$$

* * * * *

(r) * * *

(2) Onshore petroleum and natural gas production facilities shall use the appropriate default population emission factors listed in Table W–1A of this subpart for equipment leaks from valves, connectors, open ended lines, pressure relief valves, pump, flanges, and other. Major equipment and components associated with gas wells are considered gas service components in reference to Table W–1A of this subpart and major natural gas equipment in reference to Table W–1B of this subpart. Major equipment and components associated with crude oil wells are considered crude service components in reference to Table W–1A of this subpart and major crude oil equipment in reference to Table W–1C of this subpart. Where facilities conduct EOR operations the emissions factor listed in Table W–1A of this subpart shall be used to estimate all streams of gases, including recycle CO_2 stream. The component count can be determined using either of the methodologies described in this paragraph (r)(2). The same methodology must be used for the entire calendar year.

* * * * *

(6) * * *

(ii) Emissions from all above grade metering-regulating stations (including above grade TD transfer stations) shall be calculated by applying the emission factor calculated in Equation W–32 and the total count of meter/regulator runs at all above grade metering-regulating stations (inclusive of TD transfer stations) to Equation W–31. The facility wide emission factor in Equation W–32 will be calculated by using the total volumetric GHG emissions at standard conditions for all equipment leak sources calculated in Equation W–30B in paragraph (q)(8) of this section and the count of meter/regulator runs located at above grade transmission-distribution transfer stations that were monitored over the years that constitute one complete cycle as per (q)(8)(i) of this section. A meter on a regulator run is considered one meter/regulator run. Reporters that do not have above grade T–D transfer stations shall report a count of above grade metering-regulating stations only and do not have to comply with § 98.236(c)(16)(xix).

* * * * *

(t) *Volumetric emissions.* If equation parameters in § 98.233 are already at standard conditions, which results in volumetric emissions at standard conditions, then this paragraph does not apply. Calculate volumetric emissions at standard conditions as specified in paragraphs (t)(1) or (2) of this section, with actual pressure and temperature determined by engineering estimates based on best available data unless otherwise specified.

(1) Calculate natural gas volumetric emissions at standard conditions using actual natural gas emission temperature and pressure, and Equation W–33 of this section for conversions of $E_{a,n}$ or conversions of FR_a (whether sub-sonic or sonic).

* * * * *

$E_{s,n}$ = Natural gas volumetric emissions at standard temperature and pressure (STP) conditions in cubic feet, except $E_{s,n}$ equals($FR_{s,p}$)for each well p when calculating either subsonic or sonic flowrates under 98.233(g).

$E_{a,n}$ = Natural gas volumetric emissions at actual conditions in cubic feet, except $E_{a,n}$ equals ($FR_{a,p}$) for each well p when calculating either subsonic or sonic flowrates under 98.233(g).

* * * * *

(v) * * *

* * * * *

ρ_i = Density of GHG_i. Use 0.0526 kg/ft³ for CO_2 and N_2O, and 0.0192 kg/ft³ for CH_4 at 60 °F and 14.7 psia.

* * * * *

(z) * * *

(2) * * *

(iii) * * *

* * * * *

$E_{a,CO2}$ = Contribution of annual CO_2 emissions from portable or stationary fuel combustion sources in cubic feet, under actual conditions.

* * * * *

(vi) * * *

* * * * *

HHV = For the higher heating value for field gas or process vent gas, use 1.235×10^{-3} mmBtu/scf for HHV.

* * * * *

8. Section 98.236 is amended by:

a. Revising paragraph (c)(5)(ii)(D).

b. Revising paragraph (c)(9) introductory text.

c. Revising paragraph (c)(13)(iii)(C).

d. Revising paragraphs (c)(15)(i)(B), (c)(15)(i)(C), and (c)(15)(ii)(A).

e. Revising paragraph (c)(17)(v).

The revisions read as follows:

§ 98.236 Data reporting requirements.

* * * * *

(c) * * *

* * * * *

(5) * * *

(ii) * * *

(D) Average internal casing diameter, in inches, for all wells, where applicable.

* * * * *

(9) For transmission tank emissions identified in § 98.233(k) from scrubber dump valves report the following:

* * * * *

(13) * * *

(iii)* * *

(C) Report the isolation valve leakage emissions in not operating, depressurized mode in metric tons of CO_2e for each gas(refer to Equation W–23 and Equation W–24 of § 98.233).

* * * * *

(15) * * *

(i) * * *

(B) For onshore natural gas processing, range of concentrations of CH_4 and CO_2 (refer to Equation W–30A of § 98.233).

(C) Annual CO_2 and CH_4 emissions in metric tons CO_2e for each gas (refer to Equation W–30A of § 98.233), by component type.

(ii) * * *

(A) For source categories § 98.230(a)(5), (a)(6), and (a)(7), total count for each component type in Tables W–4, W–5, and W–6 of this subpart for which there is a population emission factor, listed by major heading and component type.

* * * * *

(17) * * *

(v) For each EOR pump, report annual CO_2 emissions, expressed in metric tons CO_2e for each gas.

* * * * *

9. Table A–1A of Subpart W of part 98 is revised to read as follows:

TABLE W–1A OF SUBPART W—DEFAULT WHOLE GAS EMISSION FACTORS FOR ONSHORE PETROLEUM AND NATURAL GAS PRODUCTION

Onshore petroleum and natural gas production	Emission factor (scf/hour/component)
Eastern U.S.	
Population Emission Factors—All Components, Gas Service [1]	
Valve	0.027
Connector	0.003
Open-ended Line	0.061
Pressure Relief Valve	0.040
Low Continuous Bleed Pneumatic Device Vents [2]	1.39
High Continuous Bleed Pneumatic Device Vents [2]	37.3
Intermittent Bleed Pneumatic Device Vents [2]	13.5
Pneumatic Pumps [3]	13.3
Population Emission Factors—All Components, Light Crude Service [4]	
Valve	0.05
Flange	0.003
Connector	0.007
Open-ended Line	0.05
Pump	0.01
Other [5]	0.30
Population Emission Factors—All Components, Heavy Crude Service [6]	
Valve	0.0005
Flange	0.0009
Connector (other)	0.0003
Open-ended Line	0.006
Other [5]	0.003
Western U.S.	
Population Emission Factors—All Components, Gas Service [1]	
Valve	0.121
Connector	0.017
Open-ended Line	0.031
Pressure Relief Valve	0.193
Low Continuous Bleed Pneumatic Device Vents [2]	1.39
High Continuous Bleed Pneumatic Device Vents [2]	37.3
Intermittent Bleed Pneumatic Device Vents [2]	13.5
Pneumatic Pumps [3]	13.3
Population Emission Factors—All Components, Light Crude Service [4]	
Valve	0.05
Flange	0.003
Connector (other)	0.007
Open-ended Line	0.05
Pump	0.01
Other [5]	0.30

TABLE W–1A OF SUBPART W—DEFAULT WHOLE GAS EMISSION FACTORS FOR ONSHORE PETROLEUM AND NATURAL GAS PRODUCTION—Continued

Onshore petroleum and natural gas production	Emission factor (scf/hour/component)
Population Emission Factors—All Components, Heavy Crude Service [6]	
Valve	0.0005
Flange	0.0009
Connector (other)	0.0003
Open-ended Line	0.006
Other [5]	0.003

[1] For multi-phase flow that includes gas, use the gas service emissions factors.
[2] Emission Factor is in units of ''scf/hour/device.''
[3] Emission Factor is in units of ''scf/hour/pump.''
[4] Hydrocarbon liquids greater than or equal to 20 °API are considered ''light crude.''
[5] ''Others'' category includes instruments, loading arms, pressure relief valves, stuffing boxes, compressor seals, dump lever arms, and vents.
[6] Hydrocarbon liquids less than 20 °API are considered ''heavy crude.''

10. Table W–5 to Subpart W of part 98 is amended by revising the entry for ''Vapor Recovery Compressor'' to read as follows:

TABLE W–5 OF SUBPART W—DEFAULT METHANE EMISSION FACTORS FOR LIQUEFIED NATURAL GAS (LNG) STORAGE

LNG storage	Emission factor (scf/hour/component)
* * * * * * *	
Vapor Recovery Compressor [2]	4.17
.	
.	

Subpart TT—[Amended]

11. Section 98.460 is amended by adding paragraph (c)(2)(xiii) to read as follows:

§ 98.460 Definition of Source Category.

* * * * *

(c) * * *

(2) * * *

(xiii) Other waste material that has a DOC value of 0.3 weight percent (on a wet basis) or less. DOC value must be determined using a 60-day anaerobic biodegradation test procedure identified in 98.464(b)(4)(i)(A).

[FR Doc. 2012–12193 Filed 5–18–12; 8:45 am]

BILLING CODE 6560–50–P

DEPARTMENT OF TRANSPORTATION

Federal Transit Administration

49 CFR Part 661

[Docket No. FTA–2012–0019]

Application of Buy America Waivers to Rolling Stock Overhauls and Rebuilds

AGENCY: Federal Transit Administration (FTA), DOT.

ACTION: Notice of proposed statement of policy and request for comment.

SUMMARY: This notice proposes a statement of policy regarding the application of the Federal Transit Administration's Buy America rules to procurements for the overhaul and rebuilding of rolling stock, and seeks comment from all interested parties.

DATES: Comments must be received by June 20, 2012. Late-filed comments will be considered to the extent practicable.

ADDRESSES: Please submit your comments by only one of the following means, identifying your submissions by docket number FTA–2012–0019. All electronic submissions must be made to the U.S. Government electronic site at *http://www.regulations.gov.* Commenters should follow the instructions below for mailed and hand-delivered comments:

Federal e-Rulemaking Portal: Go to *http://www.regulations.gov.* Follow the online instructions for submitting comments.

U.S. Mail: U.S. Department of Transportation, Docket Operations, West Building, Room W12–140, 1200 New Jersey Avenue SE., Washington, DC 20590.

Hand Delivery: U.S. Department of Transportation, Docket Operations, West Building, Room W12–140, 1200 New Jersey Avenue SE., Washington, DC, between 9 a.m. and 5 p.m., Monday through Friday, except Federal holidays.

Fax: (202) 493–2251.

Instructions: All submissions must make reference to the ''Federal Transit Administration'' and include docket number FTA–2012–0019. Due to security procedures in effect since October 2001, mail received through the U.S. Postal Service may be subject to delays. Parties making submissions responsive to this notice should consider using an express mail firm to ensure the prompt filing of any submissions not filed electronically or by hand. Note that all submissions received, including any personal information therein, will be posted without change or alteration to *http://www.regulations.gov.* For more information, you may review DOT's complete Privacy Act Statement in the **Federal Register** published on April 11, 2000 (65 FR 19477), or visit *http://www.regulations.gov.*

FOR FURTHER INFORMATION CONTACT: Jayme L. Blakesley at (202) 366–0304 or *jayme.blakesley@dot.gov.*

SUPPLEMENTARY INFORMATION:

I. Introduction

The purpose of this notice is to propose a statement of policy that will

clarify how to apply FTA's Buy America requirements to procurements for the overhaul and rebuilding of rolling stock. Until now, the practice of FTA grantees has been to apply the statutory waiver of 49 U.S.C. 5323(j)(2)(C) to all rolling stock procurements, including the purchase of new vehicles, overhauls, and rebuilds. The waiver allows up to 40 percent foreign content per vehicle. This practice has continued despite FTA's intention in its latest rulemaking, for which the final rule was published at 72 FR 53688 on September 20, 2007, to start requiring 100 percent U.S. content for all rolling stock components purchased as part of an overhaul. To bring industry practices in line with the 2007 rulemaking, FTA proposes this statement of policy, the purpose of which is to clarify what FTA intended in 2007—to apply the manufactured products standard of 49 CFR 661.5 to the purchase of all components for rolling stock overhauls.

II. Background

A. Buy America's Requirements

With few exceptions, Buy America prohibits FTA from funding a project unless ''the steel, iron, and manufactured goods used in the project are produced in the United States.'' 49 U.S.C. 5323(j)(1).These general requirements are waived for the procurement of rolling stock if the cost of the components produced in the United States is more than 60 percent of the cost of all components of the rolling stock and final assembly takes place in the United States. 49 U.S.C. 5323(j)(2)(C) (implemented at 49 CFR 661.11).

There is no direct law and little guidance on how to apply Buy America requirements to overhauls and rebuilds. The statutory provision on Buy America, 49 U.S.C. 5323(j), and implementing regulations, 49 CFR part 661, do not include the terms overhaul or rebuild. At least one FTA Circular discusses rebuilds and overhauls, but lacks explicit instructions for how to apply the Buy America requirements to each level of activity. FTA's Grant Management Circular 5010.1D discusses rebuilds and overhauls in the context of determining the useful life of a vehicle:

Rebuild. A rolling stock rebuild is a reconditioning at the end of a vehicle's useful like that creates additional useful life. A vehicle to be rebuilt should have already reached the end of its minimum useful life. An eligible rail car rebuild must extend the vehicle's useful life by a minimum of ten years, and a bus rebuild must extend the vehicle's life by a minimum of four years. FTA Circular 5010.1D, ch. I section 5.bbb, ch. IV section 3.g.

Overhaul. A rolling stock overhaul (sometimes called a refurbishment) is a form of preventative maintenance involving ''systematic replacement or upgrade of systems whose useful life is less than the useful life of the entire vehicle in a programmed manner.Overhaul is performed as a planned or concentrated preventative maintenance activity and is intended to enable the rolling stock to perform to the end of the original useful life.'' *Id.* at ch. I section 5.qq. In contrast to a rolling stock rebuild, an overhaul does not extend the useful life of the vehicle itself. Rather, it focuses on the useful lives of the systems that comprise the vehicle, enabling the entire vehicle to perform to the end of its original useful life. *Id.* at ch. I section 5.qq, ch. IV section 3.h.

B. FTA's 2007 Buy America Rulemaking

In 2007, as part of its Final Rule on Buy America, FTA published in the **Federal Register** a description of how to apply Buy America to certain end products and components, including rolling stock. 72 FR 53688, Sept. 20, 2007; 72 FR 55102, Sept. 28, 2007 (making a minor correction to 72 FR 53688). Although that rulemaking did not address rolling stock rebuilds and overhauls specifically, it did provide instructions for applying Buy America rules to the purchase of rolling stock replacement parts. With the purpose of simplifying country-of-origin rules for the procurement of replacement parts, FTA adopted ''non-shifting'' characterizations of replacement parts as components or sub-components and stated that a procurement of a replacement part for rolling stock would be considered consistent with the requirements for manufactured products:

> Under the new approach, procurements for replacement parts, whether components or subcomponents of the original end product, would retain their characterization and the requirements applicable to manufactured products would apply. This new approach would apply consistently to the procurement of replacement parts for rolling stock as well as to manufactured products.

72 FR 53688, 53692, Sept. 20, 2007. The Buy America requirements for manufactured goods are found at 49 CFR 661.5.

Through this statement, FTA intended to treat rolling stock overhauls as procurements of replacement parts, and therefore, to be subject to the domestic content rules that require 100 percent U.S. content for manufactured product components. However, FTA's rulemaking document was insufficiently clear on this point and the industry has continued its longstanding practice of treating overhauls as procurements of rolling stock, and thus eligible for the waiver of 49 U.S.C. 5323(j)(2), as implemented at 49 CFR 661.11, that allows up to 40 percent foreign components.

C. Application to Rebuilds and Overhauls

The rebuild and overhaul processes are conducted for different purposes and must meet different standards to be eligible for FTA funding. A rebuild results in additional useful life of the vehicle that did not exist before, whereas an overhaul is performed to maintain a vehicle and enables it to achieve the useful life it was expected to provide when it was first purchased.

It is this purchase of new useful life that makes a rebuild sufficiently like the procurement of new rolling stock to be able to apply the statutory waiver of 49 U.S.C. 5323(j)(2)(C) that allows up to 40 percent foreign content per vehicle. In contrast, an overhaul is primarily the purchase of replacement parts plus labor, and is for the purpose of maintaining a vehicle, not the acquisition of new useful life. As such, FTA views the purchase of replacement parts for an overhaul the same as it views the purchase of individual replacement parts—the manufactured product requirements of 49 CFR 661.5 apply; all components must be produced in the United States.

III. Proposed Policy

Based on the foregoing, FTA proposes to limit the application of the statutory rolling stock waiver of 49 U.S.C. 5323(j)(2)(C), as implemented at 49 CFR 661.11, to the purchase of new rolling stock and to a rebuild that adds useful life. New purchases and rebuilds may include up to 40 percent foreign components. In contrast, all components purchased as part of a rolling stock overhaul are subject to the manufactured products requirements of 49 CFR 661.5 and must be produced in the United States.

FTA seeks comment from all interested parties. After consideration of the comments, FTA will publish a second notice in the **Federal Register** with a response to comments and a justification for the final statement of policy.

Issued this 13th day, of April 2012.

Dorval R. Carter, Jr.,

Chief Counsel, Federal Transit Administration.

[FR Doc. 2012–9698 Filed 5–18–12; 8:45 am]

BILLING CODE P

DEPARTMENT OF COMMERCE

National Oceanic and Atmospheric Administration

50 CFR Part 660

[Docket No. 120509433–2433–01]

RIN 0648–BC00

Fisheries Off West Coast States; Pacific Coast Groundfish Fishery Management Plan; Trawl Rationalization Program

AGENCY: National Marine Fisheries Service (NMFS), National Oceanic and Atmospheric Administration (NOAA), Commerce.

ACTION: Proposed rule; request for comments.

SUMMARY: This proposed action would delay or revise several portions of the Pacific Coast Groundfish Fishery Trawl Rationalization Program (program) regulations. These changes are necessary to enable the National Marine Fisheries Service (NMFS) to implement new regulations for the program to comply with a court order requiring NMFS to reconsider the initial allocation of Pacific whiting (whiting) to the shorebased Individual Fishing Quota (IFQ) fishery and the at-sea mothership fishery. The proposed rule would affect the transfer of Quota Share (QS) and Incidental Bycatch Quota (IBQ) between QS accounts in the shorebased individual IFQ fishery, and severability in the mothership fishery, both of which would be delayed until NMFS can implement any necessary new regulations in those areas required by the court's order.

DATES: Comments on this proposed rule must be received no later than 5 p.m., local time on June 29, 2012.

ADDRESSES: You may submit comments on this document, identified by NOAA–NMFS–2012–0062, by any of the following methods:

- *Electronic Submissions:* Submit all electronic public comments via the Federal e-Rulemaking Portal, at *http://www.regulations.gov.* To submit comments via the e-Rulemaking Portal, first click the ''submit a comment'' icon, then enter NOAA–NMFS–2012–0062 in the keyword search. Locate the document you wish to comment on from the resulting list and click on the ''Submit a Comment'' icon on the right of that line.
- *Fax:* 206–526–6736; Attn: Ariel Jacobs.
- *Mail:* William W. Stelle, Jr., Regional Administrator, Northwest Region, NMFS, 7600 Sand Point Way NE., Seattle, WA 98115–0070; Attn: Ariel Jacobs.

Instructions: All comments received are a part of the public record and will generally be posted to *http://www.regulations.gov* without change. All Personal Identifying Information (for example, name, address, etc.) voluntarily submitted by the commenter may be publicly accessible. Do not submit Confidential Business Information or otherwise sensitive or protected information. NMFS will accept anonymous comments (if submitting comments via the Federal e-Rulemaking portal, enter ''N/A'' in the relevant required fields if you wish to remain anonymous). Attachments to electronic comments will be accepted in Microsoft Word or Excel, WordPerfect, or Adobe PDF file formats only.

FOR FURTHER INFORMATION CONTACT: Ariel Jacobs, 206–526–4491; (fax) 206–526–6736; *Ariel.Jacobs@noaa.gov.*

SUPPLEMENTARY INFORMATION:

Background

In January 2011, NMFS implemented the trawl rationalization program for the Pacific coast groundfish fishery's trawl fleet (see 75 FR 78344; Dec. 15, 2010). The program was adopted through Amendment 20 to the Pacific Coast Groundfish Fishery Management Plan (FMP) and consists of an IFQ program for the shorebased trawl fleet (including whiting and non-whiting fisheries); and cooperative (coop) programs for the at-sea mothership (MS) and catcher/processor (C/P) trawl fleets (whiting only). Allocations to the limited entry trawl fleet for certain species were developed under Amendment 21 to the FMP, also implemented in 2011.

These rules became the subject of litigation, in *Pacific Dawn, LLC* v. *Bryson,* No. C10–4829 TEH (N.D. Cal.). The plaintiffs, fishing vessel owners and fishing processers represented by the named party, Pacific Dawn, LLC, challenged several aspects of the rules, but in particular the initial allocation of whiting QS in the shorebased IFQ and mothership fisheries. Following a decision on summary judgment that NMFS had not considered the correct data in setting its initial whiting allocations, on February 21, 2012, Judge Henderson issued an order remanding the regulations setting the initial allocation of whiting for the shorebased IFQ fishery and the at-sea mothership fishery ''for further consideration'' consistent with the court's December 22, 2011 summary judgment ruling, the Magnuson-Stevens Act (MSA), and all other governing law. The Order also requires NMFS to implement revised regulations setting the quota before the 2013 Pacific whiting fishing season begins on April 1, 2013.

On February 29, 2012, NMFS informed the Pacific Fishery Management Council (Council) of the order issued in *Pacific Dawn, LLC* v. *Bryson.* NMFS also requested that the Council initiate the reconsideration of the initial allocations for QS of whiting in the shorebased IFQ fishery and for whiting catch history assignments in the at-sea mothership fishery. NMFS requested the Council schedule this issue to be discussed at its April, June, and September 2012 meetings. NMFS also stated that a rulemaking was needed to delay or revise portions of the existing regulations setting these allocations while the Council and NMFS reconsidered the initial allocation of whiting, and informed the Council of its intent to publish an Advance Notice of Proposed Rulemaking (ANPR) on that reconsideration.

At the Council's March 2012 meeting, the Council added reconsideration of the allocation of whiting to the agenda for its April, June and September 2012 meetings. At the Council's April meeting, the Council adopted a range of alternatives for analysis. The Council will review a draft analysis of the alternatives and select a preliminary preferred alternative at its June meeting. At its September meeting, the Council will choose a final preferred alternative and make a recommendation to NMFS.

NMFS published an ANPR on April 4, 2012 (77 FR 20337) that, among other things, announced the court's order, the Council meetings that would be addressing the whiting reconsideration, and NMFS' plan to publish two rulemakings in response to the court order. These two rulemakings are referred to as Reconsideration of Allocation of Whiting, Rules 1 and 2 (RAW 1 and RAW 2, respectively). NMFS is using emergency action authority under the MSA 305(c)(1) for RAW 1; RAW 2 will go through the standard FMP Council process followed by a proposed and final rule. The first rulemaking, RAW 1, which is the subject of this proposed rule, would delay or revise several portions of the regulations while NMFS and the Council reconsider the initial allocation of whiting, and until NMFS implements

any necessary new regulations in response to the court order. The second rulemaking, RAW 2, would take in to account the Council's September 2012 recommendation and reconsideration of the dates used for initial allocation of whiting for the shorebased IFQ and at-sea mothership fisheries. The proposed rule for RAW 2 is scheduled to publish in November 2012, and the final rule in March 2013. The RAW 2 rule is scheduled to be effective by April 1, 2013, consistent with the court order.

Comments on the ANPR

NMFS received four substantive comments on the ANPR that addressed how delaying the ability to transfer QS and IBQ between QS accounts in the shorebased IFQ fishery might impact the 2-year period QS holders have to divest themselves of excess QS (the divestiture period). After considering these comments, NMFS proposes allowing additional time for divestiture, such that once QS transfer is allowed, QS participants in the shoreside IFQ fishery would then have 2 years to divest QS in excess of the accumulation limit.

As stated above, NMFS is using emergency action authority under MSA 305(c)(1) for RAW 1. Under that authority, NMFS, by delegation from the Secretary, can implement regulations for an FMP without going through the Council process where NMFS finds that an emergency involving a fishery exists. 16 U.S.C. 1855(a). The rules promulgated under such circumstances must ''address the emergency.'' 16 U.S.C. 1855(c)(1) and (2). NMFS' internal guidance defining ''an emergency'' is in the **Federal Register**. 62 FR 44421; August 21, 1997. This guidance defines an emergency as a situation that (1) Arose from recent, unforeseen events, (2) presents a serious conservation problem in the fishery, and (3) can be addressed through interim emergency regulations for which the immediate benefits outweigh the value of advance notice, public comment, and the deliberative consideration of the impacts on participants to the same extent as would be expected under the formal rulemaking process.

Here, NMFS finds that an emergency exists that can only be addressed through this emergency action. Due to the court's order in *Pacific Dawn,* several existing provisions of trawl regulations must be delayed while NMFS and the Council reconsider the initial allocation of Pacific whiting. Specifically, regulations with an effective date of September 1, 2012, which would allow catch history assignment severability from the mothership/catcher-vessel (MS/CV) endorsed limited entry trawl permit, and other relevant provisions with an effective date of January 1, 2013, need to be delayed. However, there is insufficient time to go through the standard FMP Council process prior to the required effective date of this proposed rule. If NMFS does not take this action, then NMFS would not be able to implement the following rulemaking (RAW 2) that is required by the court's order. Accordingly, NMFS finds an emergency exists that can only be remedied through this emergency action.

The emergency action authority allows NMFS to delay this and other regulations related to the reconsideration of allocation of whiting for 180 days, with the possibility for an additional 185 day extension if there is a public comment period and the Council is concurrently addressing the reconsideration. NMFS intends to extend the delay of regulations for the additional 185 days, and relevant regulations may be further delayed as a part of the RAW 2 rulemaking. The RAW 2 rulemaking will be done through a three-meeting Council process with a preliminary preferred alternative selected at the June 2012 Council meeting, and a final preferred alternative selected at the September Council meeting, followed by the publication of proposed and final rules. Replacement provisions for the delayed regulations and the reconsideration will be included in RAW 2. RAW 2 is scheduled to publish by the beginning of the 2013 fishing season.

This proposed action for RAW 1 would:

(1) Delay the ability to transfer QS and IBQ between QS accounts in the shorebased IFQ fishery;

(2) Delay the requirement to divest excess quota share amounts for the shorebased IFQ fishery and the at-sea mothership fishery;

(3) Delay the ability to change MS/CV endorsement and catch history assignments from one limited entry trawl permit to another;

(4) Modify the issuance provisions for quota pounds (QP) for the beginning of fishing year 2013 to preserve NMFS' ability to deposit the appropriate final amounts into IFQ accounts based on any recalculation of QS allocations. In the meantime, NMFS proposes to deposit into accounts an interim amount of QP based on the shorebased trawl allocation, as reduced by the amount of QP for whiting trips for whiting, and for species caught incidentally in the whiting fishery (including lingcod, Pacific cod, canary, bocaccio, cowcod, yelloweye, Pacific ocean perch, widow, English sole, darkblotched, sablefish N. of 36°N lat., yellowtail N. of 40°10′ N. lat., shortspine N. of 34°27′ N. lat., minor slope rockfish N. of 40°10′ N. lat., minor slope rockfish S. of 40°10′ N. lat., minor shelf rockfish N. of 40°10′ N. lat., minor shelf rockfish S. of 40°10′ N. lat., and other flatfish). The remainder of the interim QP would be deposited in accounts at the start of the whiting primary season.

This action also advises the at-sea mothership fishery that the response to the court order may impact processor obligations and cooperative (coop) formation if whiting catch history assignments are recalculated, and announces further details on the process for the affected public to review and correct, if necessary, their landings and delivery data through 2010, since this data may be used for reallocation.

Each of these elements is described in further detail below in this preamble.

Delay Transfer of QS and IBQ

The trawl rationalization program, as implemented in January 2011, delayed QS holders' ability to transfer QS and IBQ between QS accounts in the Shorebased IFQ fishery through December 31, 2012 (i.e., transfer could begin in 2013). This proposed action would further delay QS holders' ability to transfer QS and IBQ between QS accounts. This suspension of QS transfers would be a temporary action, but is necessary to avoid complications which would occur if QS permit owners in the shorebased IFQ fishery were allowed to transfer QS percentages prior to the whiting allocation reconsideration. Due to the complexity of online transactions occurring within the fishery, NMFS has determined that it is necessary to suspend QS transfers for all species, not just those directly impacted by the reconsideration. If QS permit owners were allowed to transfer QS percentages of whiting and incidentally caught species prior to the completion of the reconsideration, then it would be difficult, if not impossible, to track QS in order to resolve discrepancies or changes to QS allocations. Additionally, if QS transfers were allowed before the completion of the reconsideration of whiting allocations, QS permit owners would be transferring QS amounts that potentially could increase or decrease after the reconsideration, possibly undermining business relationships and confusing buyers and sellers.

Also, if whiting QS is reallocated, depending on the formula used, there may be new QS permit owners, while some current QS permit owners who received initial whiting QS allocations

may not receive any under a recalculation. Moreover, because QS units do not have a unique identifier, QS loses its identity following a transfer; therefore tracking QS through transfers is extremely difficult. This rule would re-write § 660.140(d)(3)(ii)(B), paragraph (*2*) to state that QS or IBQ cannot be transferred, except under U.S. court order or authorization, and as approved by NMFS. Additionally, the rule would state that QS and IBQ cannot be transferred to another QS permit owner, except under U.S. court order or authorization and as approved by NMFS.

Delay the Requirement To Divest Excess QS in the Shorebased IFQ Fishery and the At-sea Mothership Fishery

Delayed implementation of regulations that allow for the transfer of QS could impact divestiture for those QS permit owners with QS over the accumulation limits (also called QS control limits) in the shorebased IFQ fishery. The current regulations give QS permit owners with excess QS two years after QS transfer begins to divest their excess QS amounts. In other words, during 2013 and 2014, QS permit owners with QS over the accumulation limits specified at § 660.140(d)(4)(i) must sell their excess QS by the end of 2014. At the start of 2015, any excess QS owned by QS permit owners would be permanently revoked by NMFS and redistributed to other QS permit owners in proportion to their current QS and IBQ holdings. Delaying QS transfers would shorten the divestiture period because QS could not be transferred during the reconsideration.

After considering informal public comments at the April 2012 Council meeting that the QS permit owners should retain a full two-year period for divestiture, NMFS proposes to revise the regulations at § 660.140(d)(4)(v) to state that any person that has an initial allocation of QS or IBQ in excess of the accumulation limits will be allowed to receive that allocation, but must divest themselves of the excess QS or IBQ during the first two years once QS transfers are allowed. Maintaining the full two years for divestiture would provide QS permit owners with sufficient time to plan and arrange sales of excess QS, as originally recommended by the Council for this provision of the trawl rationalization program.

Divestiture for the at-sea mothership sector will be addressed as necessary in RAW 2, because MS/CV endorsed limited entry trawl permit holders must divest their excess QS by December 31, 2012. Currently no member of the mothership sector has QS in excess of the accumulation limits. However, some members of this sector may exceed the accumulation limits following the reconsideration. Thus, NMFS will consider through the Council process for RAW 2 whether it is necessary to reinstate a divestiture period based on the reconsideration.

Delay the Ability To Change MS/CV Endorsement and Catch History Assignment

This proposed action would delay the ability of limited entry trawl permit owners in the mothership sector to transfer MS/CV endorsements and catch history assignments (CHA) between limited entry trawl permits. The rationale for this action is similar to that for delaying QS transfers in the shorebased IFQ sector; if permit owners are allowed to transfer ownership of catch history assignments before the reconsideration takes place, then it will be difficult for NMFS to track changes to the initial allocations of whiting and other incidentally caught species. Delaying CHA transfers is necessary because the values of CHA could change following the reconsideration, and it's possible that some CHA allocations could be reduced to zero. Accordingly, this rule would revise § 660.150 (g)(2)(iv)(B) and (C) to change MS/CV endorsement registration in order to temporarily delay severability, except in the cases of permit combination.

As described earlier in the preamble, NMFS will not suspend transfer of the limited entry trawl permit between permit owners (i.e., changes in permit ownership) or between vessels (i.e., change in permit registered to vessel). If NMFS reissues catch history assignments on MS/CV-endorsed limited entry trawl permits as a result of the reconsideration, NMFS will issue those permits to the permit owner of record with NMFS at the time of reissuance. Any person who is considering purchasing or otherwise obtaining ownership of an MS/CV endorsed permit should be aware that NMFS may change (increase or decrease) the current whiting catch history assignment given on the permit as a result of the reconsideration of the allocation whiting.

Deposit Interim QP Based on the Shorebased Trawl Allocation as Reduced by the Amount of QP for Whiting Trips for Whiting, and Species Caught Incidentally in the Whiting Fishery

NMFS proposes to add regulatory language to allow it to deposit into QS accounts, on or about January 1, 2013, interim QP based on the shorebased trawl allocation as reduced by the amount of QP for whiting trips for whiting, and species caught incidentally in the whiting fishery. This proposal would enable the agency to allocate the appropriate final amounts based on any recalculation of QS allocations. Species caught incidentally in the whiting fishery (during whiting directed trips) include lingcod, Pacific cod, canary, bocaccio, cowcod, yelloweye, Pacific ocean perch, widow, English sole, darkblotched, sablefish N. of 36°N lat., yellowtail N. of 40°10′ N. lat., shortspine N. of 34°27′ N. lat., minor slope rockfish N. of 40°10′ N. lat., minor slope rockfish S. of 40°10′ N. lat., minor shelf rockfish N. of 40°10′ N. lat., minor shelf rockfish S. of 40°10′ N. lat., and other flatfish. These are the species for which the initial issuance allocation percentages for the whiting sector were greater than zero, as listed in the table at § 660.140(d) (8)(iv)(A)(10), or species for which the initial allocation is determined through the biennial specifications process (§ 660.140(d) (8)(iv)(A)(10)). In other words, NMFS would not deposit all of the QP to QS accounts at the beginning of the year regardless of whether the final harvest specifications for 2013 are effective. NMFS will only deposit sufficient whiting QP for non-whiting directed trips; all other QP will be issued following the reconsideration and recalculation of initial allocations of whiting and associated, incidentally caught species. Therefore, NMFS proposes to add temporary regulations to § 660.140(d)(1)(ii)(A) and (B) to specify that NMFS will hold back QP at the start of 2013.

Potential Impact on Processor Obligations and Coop Formation

NMFS advises the at-sea mothership fishery that the response to the reconsideration may impact processor obligations and coop formation if whiting catch history assignments are recalculated. NMFS intends to announce any changes to the amount of catch history assignments associated with MS/CV-endorsed limited entry trawl permits by April 1, 2013. The mothership sector has until March 31, 2013, to submit their coop permit applications to NMFS for that fishing year. The coop permit application includes a list of the catch history amounts associated with specific MS/CV-endorsed limited entry permits and which MS permit those amounts are obligated to. In addition, MS/CV-endorsed permit owners must obligate their associated catch history assignment to an MS permit by

September 1 of the prior year. Because both of these requirements may happen before NMFS has made its determination on the 2013 catch history assignments associated with MS/CV-endorsed permits, participants in the mothership fishery should be aware that this proposal may potentially impact their processor obligations, coop formation, and coop permit application. NMFS does not anticipate a need for regulatory changes to address these potential impacts and will work with any MS coop permit applicants if there are changes in catch history assignments from that noted in the 2013 coop permit application. For example, in the initial administrative determination for any 2013 MS coop permit application, NMFS could notify the coop manager of any changes in catch history assignments for MS/CV-endorsed permits associated with that coop. NMFS solicits public comment on this approach and any potential impacts on processor obligations or MS coop formation.

Process to Review, and if Necessary, Correct Data

Potential participants of the trawl rationalization program should be aware that NMFS intends to continue to use landings data from the Pacific States Marine Fisheries Commission's PacFIN database and NMFS' Northwest Fisheries Science Center's Pacific whiting observer data from NORPAC (the North Pacific database) in reconsidering QS distribution for the trawl rationalization program, consistent with the approach used in 2009–2010. Landings data from state fish tickets, as provided by the states to the PacFIN database, would be used to determine allocations of IFQ QS for the shore-based whiting and nonwhiting harvesters and for the shore-based whiting processors. Landings data from the NORPAC database would be used to determine allocations of at-sea QS for the whiting mothership catcher vessels.

NMFS intends to follow the process it followed in 2009–2010, working with the PacFIN and NORPAC databases, to reevaluate the whiting allocations. Accordingly, NMFS will ''freeze'' the databases for the purposes of initial allocation on the date the proposed rule for RAW 2 publishes in the **Federal Register** to allow NMFS time to compile the dataset and cross check the data for any errors. ''Freezing'' the databases means that NMFS will extract a snapshot of the databases as of the proposed rule publication date, and use those data to allocate QS. ''Freezing'' the databases is necessary to hold them constant for use during qualification and initial issuance of the trawl rationalization program, and to form an administrative record of the database at a given point in time. Following the ''freezing'' of the databases, any corrections to the ''frozen'' database would be made with NMFS through the processes set forth in future trawl rationalization rules. After NMFS extracts a copy of the databases, the PacFIN and NORPAC databases will continue to exist and be updated through their normal processes, but such updates may not be used for reconsidered allocations of QS.

If potential participants in the trawl rationalization program have concerns over the accuracy of their data through 2010 in the PacFIN database, they should contact the state in which they landed those fish to correct any errors. Any revisions to an entity's fish tickets would have to be approved by the state in order to be accepted. State contacts are as follows: (1) Washington—Carol Turcotte (360–902–2253, *Carol.Turcotte@dfw.wa.gov*); (2) Oregon—Michelle Grooms (503–947–6247, *Michelle.L.Grooms@state.or.us*); and (3) California—Jana Robertson (562–342–7126, *jroberts@dfg.ca.gov*). For concerns over the accuracy of NORPAC data, contact Neil Riley (206–861–7607, *neil.riley@noaa.gov*). NMFS urges potential QS owners to go directly to the source where fisheries data is entered in the database to get it corrected before NMFS extracts the data for reconsideration of QS allocation.

For limited entry permit or permit combination data, check NMFS Web site at *http://www.nwr.noaa.gov/GroundfishHalibut/Groundfish-Permits/index.cfm* or contact Kevin Ford (206–526–6115, *kevin.ford@noaa.gov*).

NMFS also considered whether to allow limited entry permit transfers (i.e., changes in permit ownership) for all limited entry trawl endorsed permits, except for those with a catcher/processor endorsement, for a period of time during the reconsideration. This allowance would simplify reissuance of QS permits in the shorebased IFQ fishery or catch history assignments on MS/CV-endorsed limited entry trawl permits in the at-sea mothership fishery. After assessing this step, NMFS has determined that it is not necessary because RAW 2 has no planned application process. The initial allocation had a lengthy application process that necessitated not allowing limited entry permit (LEP) transfers while NMFS reviewed applications. For this time, NMFS will issue an initial administrative determination (IAD), but not an application. Accordingly, there should not be a need to freeze LEP transfers. If NMFS reissues QS permits and/or catch history assignments on MS/CV-endorsed limited entry trawl permits, NMFS proposes that those permits be issued to the permit owner of record with NMFS at the time of reissuance. These details will be developed as part of the RAW 2 rulemaking.

Classification

Pursuant to section 305(c)(1) of the MSA, the NMFS Assistant Administrator has determined that this proposed rule is consistent with the Pacific Coast Groundfish FMP, other provisions of the MSA, and other applicable law, subject to further consideration after public comment.

The Council prepared a final environmental impact statement (EIS) for Amendment 20 and Amendment 21 to the Pacific Coast Groundfish FMP; a notice of availability for each of these final EISs was published on June 25, 2010 (75 FR 36386). The Amendment 20 and 21 EISs and the draft EA are available on the Council's Web site at *http://www.pcouncil.org/* or on NMFS' Web site at *http://www.nwr.noaa.gov/Groundfish-Halibut/Groundfish-Fishery-Management/Trawl-Program/index.cfm.* The regulatory changes in this proposed rule were categorically excluded from the requirement to prepare a NEPA analysis.

This proposed rule has preliminarily been determined to be not significant for purposes of Executive Order 12866.

NMFS prepared an initial regulatory flexibility analysis (IRFA), as required by section 603 of the Regulatory Flexibility Act (RFA) (5 U.S.C. 601 *et seq*). The IRFA describes the economic impact this proposed rule, if adopted, would have on small entities. A description of the action, why it is being considered, and the legal basis for this action are contained at the beginning of this section in the preamble and in the **SUMMARY** section of the preamble. A copy of the IRFA is available from NMFS (see **ADDRESSES**).

The Small Business Administration has established size criteria to define small entities under the RFA for all major industry sectors in the US, including fish harvesting and fish processing businesses. Under these criteria, a business involved in fish harvesting is a small entity if it is independently owned and operated and not dominant in its field of operation (including its affiliates), and if it has combined annual receipts not in excess of $4.0 million for all its affiliated operations worldwide. A seafood processor is a small entity if it is independently owned and operated, not

dominant in its field of operation, and employs 500 or fewer persons on a full-time, part-time, temporary, or other basis, at all its affiliated operations worldwide. A business involved in both the harvesting and processing of seafood products is a small entity if it meets the $4.0 million criterion for fish harvesting operations. A wholesale business servicing the fishing industry is a small entity if it employs 100 or fewer persons on a full-time, part-time, temporary, or other basis, at all its affiliated operations worldwide. For marinas and charter/party boats, a small entity is one with annual receipts not in excess of $7.0 million.

These regulations directly affect holders of QS and CHA, which include both large and small entities. Quota shares were initially allocated to 166 limited entry trawl permit holders (permits held by catcher processors did not receive QS, while one limited entry trawl permit did not apply to receive QS) and to 10 whiting processors. Thirty-six limited entry permits also have MS/CV endorsements and catch history assignments. Because many of these permits were owned by the same entity, these initial allocations were consolidated into 138 quota share permits/accounts. Of the 166 limited entry permits, 25 limited entry trawl permits are either owned or closely associated with a ''large'' shorebased processing company or with a non-profit organization who considers itself a ''large'' organization. Nine other permit owners indicated that they were ''large'' companies. Almost all of these large companies are associated with the shorebased and mothership whiting fisheries. The remaining 133 limited entry trawl permits are likely held by ''small'' companies. Of the 10 shorebased processing companies (whiting first receivers/processors) that received whiting QS, three are ''small'' entities.

NMFS is postponing the ability of QS permit owners to trade QS, as well as ability of MS/CV to trade their endorsements and catch history assignments separately from their limited entry permits. NMFS proposes this delay for QS species/species groups, because for many affected parties, their QS allocations (especially for bycatch species) are composed of whiting-trip calculations and non-whiting trip calculations. Currently, QS and IBQ trading has been prohibited for all species/species categories until January 1, 2013. By postponing these activities while NMFS and the Council reconsider the initial whiting allocations and implement any changes that result, NMFS seeks to minimize confusion and disruption in the fishery from trading quota shares that have not yet been firmly established by regulation. For example, as discussed above, if QS trading is not delayed, QS permit owners would be transferring QS amounts that potentially could change (increase or decrease) after the reconsideration. This situation would undermine business relationships and create confusion among buyers and sellers. As discussed above, RAW2 will implement any revised allocations of QS and MS/CV history assignments. RAW2 is expected to be effective by April 1, 2013 in time for the first whiting season opener off California, and before the major June 15 coastwide season opener. Similarly, NMFS also proposes to delay MS/CV's ability to transfer endorsement and associated catch history assignments from one limited entry trawl permit to another. However, the MS/CV's retain the ability to sell or trade a limited entry permit with the endorsement and catch history. All other MS/CV regulations remain unchanged. NMFS intends to announce any changes to the amount of catch history assignments associated with MS/CV-endorsed limited entry trawl permits by April 1, 2013, prior to the May 15 start date for the whiting mothership fishery.

Note that NMFS is not postponing fishing. To accommodate non-whiting fisheries that begin at the beginning of the year, NMFS will provide QP to QS holders, but hold back sufficient QPs for whiting and all other incidentally caught species from the annual allocation of QPs to QS accounts made on or about January 1, 2013 to allocate the appropriate final amounts based on any recalculation of the whiting QS allocations. The proposed process of ''holding'' back sufficient QP is similar to the current process of starting the year with an interim low estimate of the annual whiting trawl allocation and then in the spring of each year adjusting the QP in the QS accounts with any additional QP, based on the final whiting trawl allocation. The final whiting trawl allocation is typically not established until early May, to incorporate the latest stock assessment information, review tribal allocation requests, and receive Pacific Fishery Management Council recommendations. In 2012, this process was modified to include the processes of the U.S.-Canada Pacific Whiting Treaty.

These delays will be temporary in nature and will benefit both small and large entities. NMFS proposes these delays to help smooth the transition to any changes in Pacific whiting allocations, and to reduce uncertainty for existing and potential new holders of these allocations.

No Federal rules have been identified that duplicate, overlap, or conflict with the alternatives. Public comment is hereby solicited, identifying such rules. A copy of this analysis is available from NMFS (see **ADDRESSES**).

NMFS issued Biological Opinions under the Endangered Species Act (ESA) on August 10, 1990, November 26, 1991, August 28, 1992, September 27, 1993, May 14, 1996, and December 15, 1999 pertaining to the effects of the Pacific Coast groundfish FMP fisheries on Chinook salmon (Puget Sound, Snake River spring/summer, Snake River fall, upper Columbia River spring, lower Columbia River, upper Willamette River, Sacramento River winter, Central Valley spring, California coastal), coho salmon (Central California coastal, southern Oregon/northern California coastal), chum salmon (Hood Canal summer, Columbia River), sockeye salmon (Snake River, Ozette Lake), and steelhead (upper, middle and lower Columbia River, Snake River Basin, upper Willamette River, central California coast, California Central Valley, south/central California, northern California, southern California). These biological opinions have concluded that implementing the FMP for the Pacific Coast groundfish fishery is not expected to jeopardize the continued existence of any endangered or threatened species under the jurisdiction of NMFS, or result in the destruction or adverse modification of critical habitat.

NMFS issued a Supplemental Biological Opinion on March 11, 2006, concluding that neither the higher observed bycatch of Chinook in the 2005 whiting fishery nor new data regarding salmon bycatch in the groundfish bottom trawl fishery required a reconsideration of its prior ''no jeopardy'' conclusion. NMFS also reaffirmed its prior determination that implementation of the Groundfish PCGFMP is not likely to jeopardize the continued existence of any of the affected ESUs. Lower Columbia River coho (70 FR 37160, June 28, 2005) and Oregon Coastal coho (73 FR 7816, February 11, 2008) were recently relisted as threatened under the ESA. The 1999 biological opinion concluded that the bycatch of salmonids in the Pacific whiting fishery were almost entirely Chinook salmon, with little or no bycatch of coho, chum, sockeye, and steelhead.

On February 9, 2012, NMFS Protected Resources Division issued a Biological Opinion (BO) pursuant to section 7(a)(2) of the Endangered Species Act (ESA) on

the effects of the operation of the Pacific coast groundfish fishery in 2012. In this Opinion, NMFS concluded that the operation of the groundfish fishery is not likely to jeopardize the continued existence of green sturgeon (Acipenser medirostris), eulachon (Thaleichthys pacificus), humpback whales (Megaptera novaeangliae), Steller sea lions (Eumetopias jubatus), and leatherback sea turtles (Dennochelys coriacea). NMFS also concluded that the operation of the groundfish fishery is not likely to destroy or adversely modify designated critical habitat of green sturgeon or leatherback sea turtles. Furthermore, NMFS concluded that the operation of the groundfish fishery may affect, but is not likely to adversely affect the following species and designated critical habitat: Sei whales (Balaenoptera borealis); North Pacific Right whales (Eubalaena japonica); Blue whales (Balaenoptera musculus); Fin whales (Balaenoptera physalus); Sperm whales (Physter macrocephalus); Southern Resident killer whales (Orcinus orca); Guadalupe fur seals (Arctocephalus townsendi); Green sea turtles (Chelonia mydas); Olive ridley sea turtles (Lepidochelys olivacea); Loggerhead sea turtles (Carretta carretta); critical habitat of Southern Resident killer whales; and critical habitat of Steller sea lions. This proposed rule does not modify any activities that would affect listed species; and thus the February 9, 2012 BO conclusions are applicable.

On August 25, 2011, NMFS Sustainable Fisheries Division initiated consultation with U.S. Fish and Wildlife Service (USFWS) pursuant to section 7(a)(2) of the Endangered Species Act (ESA) on the effects of the operation of the Pacific coast groundfish fishery. The

Biological Assessment (BA) was revised and re-submitted to USFWS on January 17, 2012. The BA concludes that the continued operation of the Pacific Coast Groundfish Fishery is likely to adversely affect short-tailed albatross; however, the level of take is not expected to reduce appreciably the likelihood of survival or significantly affect recovery of the species. The BA preliminarily concludes that continued operation of the Pacific Coast Groundfish Fishery is not likely to adversely affect California least terns, marbled murrelets, bull trout, and Northern or Southern sea otters. USFWS formally responded with a letter dated March 29, 2012 and advised NMFS that formal consultation has been initiated. Marine Mammal Protection Act (MMPA) impacts resulting from fishing activities proposed in this final rule are discussed in the FEIS for the 2011–12 groundfish fishery specifications and management measures. As discussed above, NMFS issued a biological opinion addressing impacts to ESA listed marine mammals. NMFS is currently working on the process leading to any necessary authorization of incidental taking under MMPA section 101(a)(5)(E).

List of Subjects in 50 CFR Part 660

Fisheries, Fishing, and Indian fisheries.

Dated: May 15, 2012.

Alan D. Risenhoover,

Acting Deputy Assistant Administrator for Regulatory Programs, National Marine Fisheries Service.

For the reasons stated in the preamble, 50 CFR part 660 is proposed to be amended as follows:

PART 660—FISHERIES OFF WEST COAST STATES

1. The authority citation for part 660 continues to read as follows:

Authority: 16 U.S.C. 1801 *et seq.,* 16 U.S.C. 773 *et seq.,* and 16 U.S.C. 7001 *et seq.*

2. In § 660.140, revise paragraphs (d)(1)(ii)(A)(*1*) and (*2*), (d)(1)(ii)(B)(*1*) and (*2*), (d)(3)(ii)(B)(*2*) and (d)(4)(v) to read as follows:

§ 660.140 Shorebased IFQ Program.

* * * * *

(d) * * *

(1) * * *

(ii) * * *

(A) * * *

(*1*) In years where the groundfish harvest specifications are known by January 1, deposits to QS accounts for IFQ species will be made on or about January 1. For 2013, NMFS will issue QP in two parts. On or about January 1, 2013, NMFS will deposit QP based on the shorebased trawl allocation as reduced by the amount of QP for whiting trips as specified at paragraph (d)(8)(iv)(A)(*10*) of this section for the initial issuance allocations of QS between whiting and non-whiting trips. In the spring of 2013, after NMFS has made a determination on the QS for QS permit owners, NMFS will deposit additional QP to the QS account, as appropriate.

(*2*) In years where the groundfish harvest specifications are not known by January 1, NMFS will issue QP in two parts. On or about January 1, NMFS will deposit QP based on the shorebased trawl allocation multiplied by the lower end of the range of potential harvest specifications for that year. For 2013, that amount will be further reduced by the amount of QP for whiting trips as specified at paragraph (d)(8)(iv)(A)(*10*) of this section for the initial issuance allocations of QS between whiting and non-whiting trips. After the final harvest specifications are established later in the year, NMFS will deposit additional QP to the QS account. For 2013, this will occur in the spring after NMFS has made a determination on the QS for QS permit owners.

(B) * * *

(*1*) In years where the Pacific whiting harvest specification is known by January 1, deposits to QS accounts for Pacific whiting will be made on or about January 1. For 2013, NMFS will issue QP in two parts. On or about January 1, 2013, NMFS will deposit QP based on the shorebased trawl allocation as reduced by the amount of QP for whiting trips as specified at paragraph (d)(8)(iv)(A)(*10*) of this section for the initial issuance allocations of QS between whiting and non-whiting trips. In the spring of 2013, after NMFS has made a determination on the QS for QS permit owners, NMFS will deposit additional QP to the QS account, as appropriate.

(*2*) In years where the Pacific whiting harvest specification is not known by January 1, NMFS will issue Pacific whiting QP in two parts. On or about January 1, NMFS will deposit Pacific whiting QP based on the shorebased trawl allocation multiplied by the lower end of the range of potential harvest specifications for Pacific whiting for that year. For 2013, that amount will be further reduced by the amount of QP for whiting trips as specified at paragraph (d)(8)(iv)(A)(*10*) of this section for the initial issuance allocations of QS between whiting and non-whiting trips. After the final Pacific whiting harvest specifications are established later in the year, NMFS will deposit additional QP to QS accounts. For 2013, this will occur in the spring after NMFS has made a determination on the QS for QS permit owners.

* * * * *

(3) * * *

(ii) * * *

(B) * * *

(*2*) *Transfer of QS or IBQ between QS accounts.* QS or IBQ cannot be transferred to another QS permit owner, except under U.S. court order or authorization and as approved by NMFS. QS or IBQ may not be transferred to a vessel account.

* * * * *

(4) * * *

(v) *Divestiture.* Accumulation limits will be calculated by first calculating the aggregate non-whiting QS limit and then the individual species QS or IBQ control limits. For QS permit owners

(including any person who has ownership interest in the owner named on the permit) that are found to exceed the accumulation limits during the initial issuance of QS permits, an adjustment period will be provided after which they will have to completely divest their QS or IBQ in excess of the accumulation limits. QS or IBQ will be issued for amounts in excess of accumulation limits only for owners of limited entry permits as of November 8, 2008, if such ownership has been registered with NMFS by November 30, 2008. The owner of any permit acquired after November 8, 2008, or if acquired earlier, not registered with NMFS by November 30, 2008, will only be eligible to receive an initial allocation for that permit of those QS or IBQ that are within the accumulation limits; any QS or IBQ in excess of the accumulation limits will be redistributed to the remainder of the initial recipients of QS or IBQ in proportion to each recipient's initial allocation of QS or IBQ for each species. Any person that qualifies for an initial allocation of QS or IBQ in excess of the accumulation limits will be allowed to receive that allocation, but must divest themselves of the excess QS or IBQ during the first two years once QS transfers are allowed (the divestiture period). Holders of QS or IBQ in excess of the control limits may receive and use the QP or IBQ pounds associated with that excess, up to the time their divestiture is completed. Once the divestiture period is completed, any QS or IBQ held by a person (including any person who has ownership interest in the owner named on the permit) in excess of the accumulation limits will be revoked and redistributed to the remainder of the QS or IBQ owners in proportion to the QS or IBQ holdings in the immediately following year. No compensation will be due for any revoked shares.

* * * * *

3. In § 660.150,

a. Revise paragraph (g)(2)(iv)(B);

b. Remove and reserve paragraph (g)(2)(iv)(C) to read as follows:

§ 660.150 Mothership (MS) Coop Program.

* * * * *

(g) * * *

(2) * * *

(iv) * * *

(B) *Application.* NMFS is not accepting applications for a change in MS/CV endorsement registration at this time.

(C) *[Reserved]*

* * * * *

[FR Doc. 2012–12265 Filed 5–18–12; 8:45 am]

BILLING CODE 3510–22–P

DEPARTMENT OF COMMERCE

National Oceanic and Atmospheric Administration

50 CFR Part 679

RIN 0648–BB42

Fisheries of the Exclusive Economic Zone off Alaska and Pacific Halibut Fisheries; Observer Program

AGENCY: National Marine Fisheries Service (NMFS), National Oceanic and Atmospheric Administration (NOAA), Commerce.

ACTION: Notice of public hearing.

SUMMARY: On April 18, 2012, we, NMFS, published a proposed rule in the **Federal Register** to restructure the funding and deployment system for observers in North Pacific groundfish and halibut fisheries via Amendment 86 to the Fishery Management Plan for Groundfish of the Bering Sea and Aleutian Islands Management Area (BSAI FMP) and Amendment 76 to the Fishery Management Plan for Groundfish of the Gulf of Alaska (GOA FMP). The public comment period for the subject proposed rule closes on June 18, 2012. We will hold a public hearing in Seattle, WA, to receive oral and written comments on the proposed regulations during the public comment period.

DATES: The public hearing will be held on June 1, 2012, 10 a.m. to 12 p.m., Pacific daylight time, at the NOAA Alaska Fisheries Science Center, 7600 Sand Point Way NE., Building 4, Observer Training Room (1055), Seattle, WA 98115. Written comments must be received no later than 5 p.m., Alaska local time, June 18, 2012.

ADDRESSES: You may submit comments, identified by FDMS Docket Number NOAA–NMFS–2011–0210, by any one of the following methods:

- *Electronic Submissions:* Submit all electronic public comments via the Federal eRulemaking Portal Web site at *http://www.regulations.gov.* To submit comments via the e-Rulemaking Portal, first click the ''Submit a Comment'' icon, then enter NOAA–NMFS–2011–0210 in the keyword search. Locate the document you wish to comment on from the resulting list and click on the ''Submit a Comment'' icon on the right of that line.
- *Mail:* Address written comments to Glenn Merrill, Assistant Regional Administrator, Sustainable Fisheries Division, Alaska Region NMFS, Attn: Ellen Sebastian. Mail comments to P.O. Box 21668, Juneau, AK 99802–1668.
- *Fax:* Address written comments to Glenn Merrill, Assistant Regional Administrator, Sustainable Fisheries Division, Alaska Region NMFS, Attn: Ellen Sebastian. Fax comments to 907–586–7557.
- *Hand delivery to the Federal Building:* Address written comments to Glenn Merrill, Assistant Regional Administrator, Sustainable Fisheries Division, Alaska Region NMFS, Attn: Ellen Sebastian. Deliver comments to 709 West 9th Street, Room 420A, Juneau, AK.
- Submit oral or written comments to NMFS at the public hearing listed in this notice.

Comments must be submitted by one of the above methods to ensure that the comments are received, documented, and considered by NMFS. Comments sent by any other method, to any other address or individual, or received after the end of the comment period, may not be considered.

All comments received are a part of the public record and will generally be posted to *http://www.regulations.gov* without change. All Personal Identifying Information (e.g., name, address) voluntarily submitted by the commenter will be publicly accessible. Do not submit Confidential Business Information or otherwise sensitive or protected information.

NMFS will accept anonymous comments (enter N/A in the required fields, if you wish to remain anonymous). Attachments to electronic comments will be accepted in Microsoft Word, Excel, WordPerfect, or Adobe portable document file (pdf) formats only.

Electronic copies of the proposed rule to implement Amendment 86 to the BSAI FMP and Amendment 76 to the GOA FMP and the Environmental Assessment/Regulatory Impact Review/Initial Regulatory Flexibility Analysis prepared for this action may be obtained from *http://www.regulations.gov* or from the NMFS Alaska Region Web site at *http://alaskafisheries.noaa.gov.*

FOR FURTHER INFORMATION CONTACT: Brandee Gerke, (907) 586–7228.

SUPPLEMENTARY INFORMATION: On April 18, 2012, we, NMFS, published a proposed rule in the **Federal Register** (77 FR 23326) to restructure the funding and deployment system for observers in the North Pacific groundfish and halibut fisheries via Amendment 86 to the BSAI FMP and Amendment 76 to GOA FMP. The proposed rule was prepared under the authority of section 313 of the Magnuson-Stevens Fishery Conservation and Management Act (MSA). MSA section 313 requires NMFS

to conduct a public hearing in each state represented on the North Pacific Fishery Management Council (Council) for the purpose of receiving public comment on the proposed regulations. The states represented on the Council are Alaska, Oregon, and Washington. We held public hearings in Seattle, WA, on April 17, 2012; Newport, OR, on April 19, 2012; and in Juneau, AK, on May 2, 2012. Because the proposed regulations did not publish until April 18, 2012, we will conduct another public hearing on the proposed regulations in Seattle, WA, to receive written and oral comments on the proposed regulations.

People wishing to make an oral statement for the record at the public hearing are encouraged to provide a written copy of their statement and present it to us at the hearing. If attendance at the public hearing is large, the time allotted for individual oral statements may be limited. Oral and written statements receive equal consideration. There are no limits on the length of written comments submitted to us.

There is no need to register for the hearing. Please be advised that a valid government-issued photo-identification will be required for entry through building security at the hearing.

Authority: 16 U.S.C. 1801 *et seq.*

Dated: May 15, 2012.

Carrie Selberg,

Acting Director, Office of Sustainable Fisheries, National Marine Fisheries Service.

[FR Doc. 2012–12273 Filed 5–18–12; 8:45 am]

BILLING CODE 3510–22–P

Notices

Federal Register

Vol. 77, No. 98

Monday, May 21, 2012

This section of the FEDERAL REGISTER contains documents other than rules or proposed rules that are applicable to the public. Notices of hearings and investigations, committee meetings, agency decisions and rulings, delegations of authority, filing of petitions and applications and agency statements of organization and functions are examples of documents appearing in this section.

DEPARTMENT OF AGRICULTURE

Office of the Chief Financial Officer

Request for Approval of a New Information Collection

AGENCY: Office of the Chief Financial Officer; USDA.

ACTION: Notice and request for comments.

SUMMARY: In accordance with the Paperwork Reduction Act of 1995 (44 U.S.C. Chapter 35), this notice announces the Office of the Chief Financial Officer intention to request approval for a new information collection for a Supplier Credit Recovery Audit.

DATES: Comments on this notice must be received by July 20, 2012 to be assured of consideration.

FOR FURTHER INFORMATION CONTACT: Contact Dale Theurer, Office of the Chief Financial Officer, Fiscal Policy Division, U.S. Department of Agriculture, 1400 Independence Ave. SW., Washington, DC 20250 (202) 720–1167; Fax number (202) 690–1529.

SUPPLEMENTARY INFORMATION:

Title: Suppler Credit Recovery Audit Letter.

OMB Number: 0505–XXXX.

Expiration Date of Approval: Three years from approval date.

Type of Request: New information collection.

Abstract: The Department of Agriculture (USDA) believes there are many program recipients and service providers who maybe carrying a credit balance in their financial records due to possible overpayments, credits for unused services, damaged goods, etc. USDA desires to send out letters to all vendors in an attempt to collect these payments. This letter is asking these vendors to review their records to verify no funds are due back the USDA for goods or services provided by these vendors.

Estimate of Burden: Public reporting burden for this collection of information is estimated to average 2 hours per response. A business will receive the request and develop a query to their automated accounting system which could take an average of 30 minutes or less to review the customer records to determine which accounts have a credit balance if any. The customer ledgers would potentially show the number of USDA customers. If the business has a manual accounting system then a manual review would be required of the customer ledgers. This could take 1–2 hours depending on the size of the company. These estimates are based on the average business and entity using computers to do accounting. The estimate is based on the number of purchase orders and contracts currently in USDA procurement systems.

Type of Respondents: Vendors, Contractors, Program Recipients, any Entity receiving funds from USDA.

Estimated Number of Respondents: 300,000.

Estimated Number of Responses: 300,000.

Estimated Number of Responses per Respondent: 1.

Estimated Total Annual Burden on Respondents: 600,000 hours.

Comments are invited on: (1) Whether the proposed collection of information is necessary for the proper performance of the functions of the agency, including whether the information will have practical utility; (2) the accuracy of the agency's estimate of the burden of the proposed collection of information including the validity of the methodology and assumptions used; (3) ways to enhance the quality, utility, and clarity of the information to be collected; and (4) ways to minimize the burden of the collection of information on those who are to respond, including the use of appropriate automated, electronic, mechanical, or other technological collection techniques or other forms of information technology. Comments may be sent to Dale Theurer, Office of the Chief Financial Officer, Debt and Credit Policy Division, U.S. Department of Agriculture, 1400 Independence Ave. SW., Washington, DC 20250. All comments received will be available for public inspection during regular business hours at the same address.

All responses to this notice will be summarized and included in the request for OMB approval. All comments will become a matter of public record.

Frederic Marks,

Interim Director, Fiscal Policy Division, Office of the Chief Financial Officer, Department of Agriculture.

[FR Doc. 2012–12154 Filed 5–18–12; 8:45 am]

BILLING CODE P

DEPARTMENT OF AGRICULTURE

Food Safety and Inspection Service

[Docket No. FSIS–2012–0025]

National Advisory Committee on Meat and Poultry Inspection; Nominations for Membership

AGENCY: Food Safety and Inspection Service, USDA.

ACTION: Notice.

SUMMARY: The U.S. Department of Agriculture (USDA) is soliciting nominations for membership on the National Advisory Committee on Meat and Poultry Inspection (NACMPI). The full Committee consists of not more than 20 members, and each person selected is expected to serve a 2-year term.

DATES: Nominations, including a cover letter to the Secretary, the nominee's typed resume or curriculum vitae, and a completed USDA Advisory Committee Membership Background Information form AD–755, must be received by June 20, 2012. USDA Advisory Committee Membership Background Information form AD–755 is available online at: *http://www.fsis.usda.gov/forms/index.asp.* Self nominations are welcome.

ADDRESSES: Nomination packages, including a cover letter to the Secretary accompanied by a resume and AD–755 form, can be sent by mail to: Thomas Vilsack, Secretary, U.S. Department of Agriculture, 1400 Independence Avenue SW., Washington, DC 20250, Attn: National Advisory Committee on Meat and Poultry Inspection.

FOR FURTHER INFORMATION CONTACT: Ms. Sally Fernandez, Program Specialist, Office of Outreach, Employee Education and Training, Food Safety and Inspection Service (FSIS), telephone (202) 690–6524; Fax (202) 690–6519; email *sally.fernandez@fsis.usda.gov.*

SUPPLEMENTARY INFORMATION:

Background

In accordance with the Federal Advisory Committee Act, 5 U.S.C. app. 2, USDA is seeking nominees for membership on the National Advisory Committee on Meat and Poultry Inspection (NACMPI). The Committee provides advice and recommendations to the Secretary on meat and poultry inspection programs, pursuant to sections 7(c), 24, 301(a)(3), and 301(c) of the Federal Meat Inspection Act, 21 U.S.C. 607(c), 624, 645, 661(a)(3), and 661(c), and to sections 5(a)(3), 5(c), 8(b), and 11(e) of the Poultry Products Inspection Act, 21 U.S.C. 454(a)(3), 454(c), 457(b), and 460(e). Nominations for membership are being sought from persons representing industry, academia, State and local government officials, public health organizations, and consumers and consumer organizations. NACMPI is seeking members with knowledge and interest in meat and poultry safety and other FSIS responsibilities.

Appointments to the Committee will be made by the Secretary. To ensure that recommendations of the Committee take into account the needs of the diverse groups served by the Department, membership will include, to the extent practicable, individuals with demonstrated ability to represent minorities, women, and persons with disabilities. It is anticipated that the Committee will meet at least once annually.

Please note that federally registered lobbyists cannot be considered for USDA advisory committee membership. Members can only serve on one advisory committee at a time. All nominees will undergo a USDA background check.

To receive consideration for serving on the NACMPI, a nominee must submit a resume and USDA Advisory Committee Membership Background Information form AD–755. The resume or curriculum vitae must be limited to five one-sided pages and should include nominee's educational background and expertise. For submissions received that are more than five one-sided pages in length, only the first five pages will be reviewed.

Additional Public Notification

FSIS will announce this notice online through the FSIS Web page located at *http://www.fsis.usda.gov/regulations_&_policies/Federal_Register_Notices/index.asp.*

FSIS will also make copies of this **Federal Register** publication available through the FSIS Constituent Update, which is used to provide information regarding FSIS policies, procedures, regulations, **Federal Register** notices, FSIS public meetings, and other types of information that could affect or would be of interest to constituents and stakeholders. The Update is communicated via Listserv, a free electronic mail subscription service for industry, trade groups, consumer interest groups, health professionals, and other individuals who have asked to be included. The Update is also available on the FSIS Web page. In addition, FSIS offers an electronic mail subscription service which provides automatic and customized access to selected food safety news and information. This service is available at *http://www.fsis.usda.gov/News_&_Events/Email_Subscription/.* Options range from recalls to export information to regulations, directives, and notices. Customers can add or delete subscriptions themselves, and have the option to password protect their accounts.

USDA Nondiscrimination Statement

USDA prohibits discrimination in all its programs and activities on the basis of race, color, national origin, gender, religion, age, disability, political beliefs, sexual orientation, and marital or family status. (Not all prohibited bases apply to all programs.) Persons with disabilities who require alternative means for communication of program information (Braille, large print, or audiotape.) should contact USDA's Target Center at 202–720–2600 (voice and TTY).

To file a written complaint of discrimination, write USDA, Office of the Assistant Secretary for Civil Rights, 1400 Independence Avenue SW., Washington, DC 20250–9410 or call 202–720–5964 (voice and TTY). USDA is an equal opportunity provider and employer.

Done at Washington, DC on: May 15, 2012.

Alfred V. Almanza,

Administrator.

[FR Doc. 2012–12152 Filed 5–18–12; 8:45 am]

BILLING CODE 3410–DM–P

DEPARTMENT OF COMMERCE

Submission for OMB Review; Comment Request

The Department of Commerce will submit to the Office of Management and Budget (OMB) for clearance the following proposal for collection of information under the provisions of the Paperwork Reduction Act (44 U.S.C. Chapter 35).

Agency: National Oceanic and Atmospheric Administration (NOAA).

Title: U.S. Fishermen Fishing in Russian Waters.

OMB Control Number: 0648–0228.

Form Number(s): NA.

Type of Request: Regular submission (extension of a current information collection).

Number of Respondents: 1.

Average Hours per Response: 1.

Burden Hours: 1.

Needs and Uses: This request is for extension of a current information collection.

Regulations at 50 CFR part 300, Subpart J, govern United States (U.S.) fishing in the Economic Zone of the Russian Federation. Russian authorities may permit U.S. fishermen to fish for allocations of surplus stocks in the Russian Economic Zone. Permit application information is sent to the National Marine Fisheries Service (NMFS) for transmission to Russia. If Russian authorities issue a permit, the vessel owner or operator must submit a permit abstract report to NMFS, and also report 24 hours before leaving the U.S. Exclusive Economic Zone (EEZ) for the Russian Economic Zone and 24 hours before re-entering the U.S. EEZ after being in the Russian Economic Zone.

The permit application information is used by Russian authorities to determine whether to issue a permit. NMFS uses the other information to help ensure compliance with Russian and U.S. fishery management regulations.

Affected Public: Business or other for-profit organizations.

Frequency: Annually.

Respondent's Obligation: Mandatory.

OMB Desk Officer: *OIRA_Submission@omb.eop.gov.*

Copies of the above information collection proposal can be obtained by calling or writing Jennifer Jessup, Departmental Paperwork Clearance Officer, (202) 482–0336, Department of Commerce, Room 6616, 14th and Constitution Avenue NW., Washington, DC 20230 (or via the Internet at *JJessup@doc.gov*).

Written comments and recommendations for the proposed information collection should be sent within 30 days of publication of this notice to *OIRA_Submission@omb.eop.gov.*

Dated: May 15, 2012.

Gwellnar Banks,

Management Analyst, Office of the Chief Information Officer.

[FR Doc. 2012–12184 Filed 5–18–12; 8:45 am]

BILLING CODE 3510–22–P

DEPARTMENT OF COMMERCE

Submission for OMB Review; Comment Request

The Department of Commerce will submit to the Office of Management and Budget (OMB) for clearance the following proposal for collection of information under the provisions of the Paperwork Reduction Act (44 U.S.C. Chapter 35).

Agency: National Telecommunications and Information Administration (NTIA).

Title: Broadband Technology Opportunities Program (BTOP) Quarterly and Annual Performance Progress Reports.

OMB Control Number: 0660–0037.

Form Number(s): None.

Type of Request: Regular submission (extension of emergency revision request to a currently approved information collection).

Number of Respondents: 121 (Total requested: 231).

Average Hours per Response: Quarterly reports, 5 hours; and Annual reports, 4 hours.

Burden Hours: 719 (Total requested: 5,374).

Needs and Uses: The American Recovery and Reinvestment Act of 2009 (Recovery Act) appropriated funds for BTOP to support the deployment of broadband infrastructure, enhance and expand public computer centers, encourage sustainable adoption of broadband service, and develop and maintain a nationwide public map of broadband service capability and availability.

The Recovery Act mandates that funds distributed under its authority be subject to an unprecedented level of transparency and accountability. This includes an increased level of monitoring and oversight to ensure that Recovery Act funds are used for their authorized purposes; steps are in place to prevent waste, fraud or abuse; and BTOP projects avoid unnecessary delay and cost-overruns and meet targets and goals. In addition to increased levels of monitoring and oversight, BTOP projects must adhere to mandatory timelines requiring them to demonstrate that each project will be substantially completed within two years of the grant's issuance date. To enable NTIA to properly achieve these objectives and verify that BTOP projects are meeting established targets and goals within the mandated timeframes, NTIA has developed and utilized Performance Progress Reports (PPRs) to capture quarterly and annual reports for each project type (Infrastructure, Public Computer Center, and Sustainable Broadband Adoption). Each PPR provides updates on fundamental project milestones and key performance indicators that allow NTIA to measure project progress and ensure proper monitoring and compliance with program rules.

Revision: NTIA reviewed PPRs, submitted on September 30, 2011, and assessed the individual responses provided by BTOP grant recipients and concluded that several key questions on the existing annual Infrastructure PPR needed to be clarified if NTIA was to receive the appropriate level of detail necessary to ensure BTOP projects are meeting established targets and goals within mandated timeframes. NTIA also requested updated mapping information in order to better monitor the current status and impact of broadband deployment in each of the funded project areas. The annual Infrastructure PPR was revised to capture more detailed information related to: Community Anchor Institutions; Points of Presence; and Network Maps. These revisions were submitted as an emergency request to OMB on November 1, 2011; and approval was granted for six months. This extension request is for the required three-year Paperwork Reduction Act approval.

Affected Public: Business or other for-profit organizations.

Frequency: Annually.

Respondent's Obligation: Mandatory.

OMB Desk Officer: Nicholas Fraser, (202) 395–5887.

Copies of the above information collection proposal can be obtained by calling or writing Jennifer Jessup, Departmental Paperwork Clearance Officer, (202) 482–0336, Department of Commerce, Room 6616, 14th and Constitution Avenue NW., Washington, DC 20230 (or via the Internet at *jjessup@doc.gov*).

Written comments and recommendations for the proposed information collection should be sent within 30 days of the publication of this notice to Nicholas Fraser, OMB Desk Officer, Fax number (202) 395–7285, or via the Internet at *Nicholas_A._Fraser@omb.eop.gov.*

Dated: May 16, 2012.

Gwellnar Banks,

Management Analyst, Office of the Chief Information Officer.

[FR Doc. 2012–12227 Filed 5–18–12; 8:45 am]

BILLING CODE 3510–06–P

DEPARTMENT OF COMMERCE

International Trade Administration

North American Free-Trade Agreement (NAFTA), Article 1904 Binational Panel Reviews

AGENCY: NAFTA Secretariat, United States Section, International Trade Administration, Department of Commerce.

ACTION: Notice of Decision of Panel.

SUMMARY: On May 11, 2012, the binational panel issued its decision in the review of the final results of the 2005/2006 antidumping administrative review made by the U.S. Department of Commerce, respecting Carbon and Certain Alloy Steel Wire Rod from Canada, NAFTA Secretariat File Number USA–CDA–2008–1904–02. The binational panel affirmed in part and remanded in part the U.S. Department of Commerce's determination. Copies of the panel decision are available from the U.S. Section of the NAFTA Secretariat.

FOR FURTHER INFORMATION CONTACT: Ellen M. Bohon, United States Secretary, NAFTA Secretariat, Suite 2061, 14th and Constitution Avenue, Washington, DC 20230, (202) 482–5438.

SUPPLEMENTARY INFORMATION: Chapter 19 of the North American Free-Trade Agreement (''Agreement'') establishes a mechanism to replace domestic judicial review of final determinations in antidumping and countervailing duty cases involving imports from a NAFTA country with review by independent binational panels. When a Request for Panel Review is filed, a panel is established to act in place of national courts to review expeditiously the final determination to determine whether it conforms with the antidumping or countervailing duty law of the country that made the determination.

Under Article 1904 of the Agreement, which came into force on January 1, 1994, the Government of the United States, the Government of Canada and the Government of Mexico established *Rules of Procedure for Article 1904 Binational Panel Reviews* (''Rules''). These Rules were published in the **Federal Register** on February 23, 1994 (59 FR 8686). The panel review in this matter has been conducted in accordance with these Rules.

Panel Decision: On May 11, 2012, the panel affirmed the U.S. Department of Commerce's final results of the administrative review determining that the Complainant's sales were made at the same level of trade. The panel remanded to the U.S. Department of Commerce to provide a thorough

explanation, keyed to the ''otherwise contrary to law'' standard of review, of the statutory interpretation underlying its approach of granting offsets for non-dumped sales in original investigations, while denying such offsets in administrative reviews. The panel directed Commerce to provide such explanation within 45 days of the date of issue of the panel's Decision and Order (June 25, 2012).

Dated: May 15, 2012.

Ellen M. Bohon,

U.S. Secretary, NAFTA Secretariat.

[FR Doc. 2012–12174 Filed 5–18–12; 8:45 am]

BILLING CODE 3510–GT–P

DEPARTMENT OF COMMERCE

National Oceanic and Atmospheric Administration

Proposed Information Collection; Comment Request; Subsistence Fishery for Pacific Halibut in Waters Off Alaska: Registration and Marking of Gear

AGENCY: National Oceanic and Atmospheric Administration (NOAA), Commerce.

ACTION: Notice.

SUMMARY: The Department of Commerce, as part of its continuing effort to reduce paperwork and respondent burden, invites the general public and other Federal agencies to take this opportunity to comment on proposed and/or continuing information collections, as required by the Paperwork Reduction Act of 1995.

DATES: Written comments must be submitted on or before July 20, 2012.

ADDRESSES: Direct all written comments to Jennifer Jessup, Departmental Paperwork Clearance Officer, Department of Commerce, Room 6616, 14th and Constitution Avenue NW., Washington, DC 20230 (or via the Internet at *JJessup@doc.gov*).

FOR FURTHER INFORMATION CONTACT: Requests for additional information or copies of the information collection instrument and instructions should be directed to Patsy A. Bearden, (907) 586–7008 or *patsy.bearden@noaa.gov*.

SUPPLEMENTARY INFORMATION:

I. Abstract

This request is for extension of information collection requirements that are part of the program for the Pacific halibut subsistence fishery. The program includes requirements for registration to participate in the fishery and the marking of certain types of gear used in this fishery. Eligibility and requirements are codified in 50 CFR 300.65. The registration requirement is intended to allow qualified persons to practice the long-term, customary, and traditional harvest of Pacific halibut for food in a noncommercial manner. The gear-marking requirement aids in enforcement and in actions related to gear damage or loss. The registration information may be submitted by an individual or as a list of multiple individuals from an Alaska Native tribe.

II. Method of Collection

Applications may be submitted online or as email attachments; paper forms may be sent by mail or fax.

III. Data

OMB Control Number: 0648–0460.

Form Number: None.

Type of Review: Regular submission (extension of a current information collection).

Affected Public: Not-for-profit institutions; state, local, and tribal government; and individuals or households.

Estimated Number of Respondents: 27,963.

Estimated Time per Response: Subsistence halibut registration certificate (SHARC) application, 10 minutes; subsistence halibut gear marking, 15 minutes.

Estimated Total Annual Burden Hours: 1,206.

Estimated Total Annual Cost to Public: $17,663.

IV. Request for Comments

Comments are invited on: (a) Whether the proposed collection-of-information is necessary for the proper performance of the functions of the agency, including whether the information shall have practical utility; (b) the accuracy of the agency's estimate of the burden (including hours and cost) of the proposed collection of information; (c) ways to enhance the quality, utility, and clarity of the information to be collected; and (d) ways to minimize the burden of the collection of information on respondents, including through the use of automated collection techniques or other forms of information technology.

Comments submitted in response to this notice will be summarized and/or included in the request for OMB approval of this information collection; they also will become a matter of public record.

Dated: May 15, 2012.

Gwellnar Banks,

Management Analyst, Office of the Chief Information Officer.

[FR Doc. 2012–12177 Filed 5–18–12; 8:45 am]

BILLING CODE 3510–22–P

DEPARTMENT OF COMMERCE

National Oceanic and Atmospheric Administration

RIN 0648–XC033

Marine Mammals; File No. 17157

AGENCY: National Marine Fisheries Service (NMFS), National Oceanic and Atmospheric Administration (NOAA), Commerce.

ACTION: Notice; receipt of application.

SUMMARY: Notice is hereby given that Stephen John Trumble, Ph.D., Baylor University, 101 Bagby Ave., Waco, TX 76706, has applied in due form for a permit to import, export, and receive marine mammal parts for scientific research.

DATES: Written, telefaxed, or email comments must be received on or before June 20, 2012.

ADDRESSES: The application and related documents are available for review by selecting ''Records Open for Public Comment'' from the *Features* box on the Applications and Permits for Protected Species (APPS) home page, *https://apps.nmfs.noaa.gov,* and then selecting File No. 17157 from the list of available applications.

These documents are also available upon written request or by appointment in the following offices:

Permits and Conservation Division, Office of Protected Resources, NMFS, 1315 East-West Highway, Room 13705, Silver Spring, MD 20910; phone (301) 427–8401; fax (301) 713–0376; and

Southeast Region, NMFS, 263 13th Avenue South, Saint Petersburg, FL 33701; phone (727) 824–5312; fax (727) 824–5309.

Written comments on this application should be submitted to the Chief, Permits and Conservation Division, at the address listed above. Comments may also be submitted by facsimile to (301) 713–0376, or by email to *NMFS.Pr1Comments@noaa.gov.* Please include the File No. in the subject line of the email comment.

Those individuals requesting a public hearing should submit a written request to the Chief, Permits and Conservation Division at the address listed above. The request should set forth the specific reasons why a hearing on these applications would be appropriate.

FOR FURTHER INFORMATION CONTACT: Laura Morse or Jennifer Skidmore, (301) 427–8401.

SUPPLEMENTARY INFORMATION: The subject permit is requested under the authority of the Marine Mammal Protection Act of 1972, as amended (MMPA; 16 U.S.C. 1361 *et seq.*), the regulations governing the taking and importing of marine mammals (50 CFR part 216), the Endangered Species Act of 1973, as amended (ESA; 16 U.S.C. 1531 *et seq.*), and the regulations governing the taking, importing, and exporting of endangered and threatened species (50 CFR parts 222–226).

The objectives of the proposed research are to chronologically profile anthropogenic and physiological data from whale earplugs and determine individual- through population-level exposure and stress. Up to 25 earplugs each of blue whale (*Balaenoptera musculus*), sei whale (*B. borealis*), minke whale (*B. acutorostrata*), humpback whale (*Megaptera novaeangliae*), and gray whale (*Eschrichtius robustus*) will be imported from museums worldwide for analysis. The requested duration of the permit is 5 years.

In compliance with the National Environmental Policy Act of 1969 (42 U.S.C. 4321 *et seq.*), an initial determination has been made that the activities proposed are categorically excluded from the requirement to prepare an environmental assessment or environmental impact statement.

Concurrent with the publication of this notice in the **Federal Register**, NMFS is forwarding copies of the application to the Marine Mammal Commission and its Committee of Scientific Advisors.

Dated: May 15, 2012.

Tammy C. Adams,

Acting Chief, Permits and Conservation Division, Office of Protected Resources, National Marine Fisheries Service.

[FR Doc. 2012–12260 Filed 5–18–12; 8:45 am]

BILLING CODE 3510–22–P

DEPARTMENT OF COMMERCE

National Oceanic and Atmospheric Administration

RIN 0648–XC021

Notice of Intent To Terminate the Existing Draft Environmental Impact Statement and Prepare a New Environmental Impact Statement

AGENCY: National Marine Fisheries Service (NMFS), National Oceanic and Atmospheric Administration (NOAA), Commerce.

ACTION: Notice; request for comments.

SUMMARY: We, NMFS, intend to prepare an Environmental Impact Statement (EIS) pursuant to the National Environmental Policy Act (NEPA), related to the Makah Indian Tribe's (Tribe) request that we authorize treaty right hunting of eastern North Pacific gray whales in usual and accustomed fishing grounds off the coast of Washington State. This notice briefly describes the background of the Makah Tribe's request for waiver, terminates a prior draft EIS (DEIS), and identifies and requests comments on a set of new potential alternatives currently under consideration.

DATES: Comments and information regarding the proposed revisions must be received (See **ADDRESSES**) no later than 5 p.m. Pacific Time on August 10, 2012.

ADDRESSES: You may submit comments, identified by [NOAA–NMFS–2012–0104], by any of the following methods:

Electronic Submissions: Submit all electronic public comments via the Federal eRulemaking Portal *http://www.regulations.gov.*

Mail: Send comments to: Steve Stone, Protected Resources Division, NMFS, 1201 NE Lloyd Blvd., Suite 1100, Portland, OR 97232.

Facsimile (fax) to: 503–230–5441.

Instructions: Comments will be posted for public viewing as soon as possible during the comment period. All comments received are a part of the public record and will generally be posted to *http://www.regulations.gov* without change. We may elect not to post comments that contain obscene or threatening content. All Personal Identifying Information (for example, name, address, etc.) voluntarily submitted by the commenter may be publicly accessible. Do not submit Confidential Business Information or otherwise sensitive or protected information.

We will accept anonymous comments (enter N/A in the required fields, if you wish to remain anonymous). You may submit attachments to electronic comments in Microsoft Word, Excel, WordPerfect, or Adobe PDF file formats only. If your submission is made via hardcopy that includes personal identifying information, you may request at the top of your document that we withhold this information from public review to the extent consistent with applicable law. However, we cannot guarantee that we will be able to do so.

FOR FURTHER INFORMATION CONTACT: Donna Darm, NMFS, Northwest Region, 206–526–6150; or Shannon Bettridge, NMFS, Office of Protected Resources, 301–427–8402. References used in this notice and related information are available via our Web site at *http://www.nwr.noaa.gov/Marine-Mammals/Whales-Dolphins-Porpoise/Gray-Whales/Index.cfm.*

SUPPLEMENTARY INFORMATION:

Background

On February 14, 2005, we received the Makah Tribe's request for a limited waiver of the Marine Mammal Protection Act (MMPA) take moratorium under Section 101(a)(3)(A) (16 U.S.C. 1371(a)(3)(A)), including issuance of regulations and any necessary permits. The waiver, regulations, and permit would allow the Tribe to continue treaty right ceremonial and subsistence hunting of eastern North Pacific (ENP) gray whales in its usual and accustomed fishing grounds (U&A). The Tribe made the request following the Ninth Circuit Court's decision in *Anderson* v. *Evans,* 371 F.3d 475, that the Tribe must comply with the process prescribed in the MMPA for authorizing take of marine mammals. On January 24, 2006, the Tribe requested that we also take any other necessary actions, including under the Whaling Convention Act (16 U.S.C. 916 *et seq.*), associated with a tribal hunt.

The Tribe's waiver request proposes to conduct treaty ceremonial and subsistence harvest in the Tribe's U&A of up to 20 gray whales from the ENP stock in any 5-year period with a maximum of five whales per year, corresponding with aboriginal subsistence whaling limits established by the International Whaling Commission (IWC) in response to a joint request from the United States and Russia. In addition, the waiver request states that tribal regulations would limit the number of gray whales that may be struck to no more than seven in any calendar year, and would limit the number of struck and lost whales to no more than three in any calendar year.

Other tribal regulations proposed in the waiver request include measures to target migrating whales and avoid the intentional harvest of whales that may be part of the Pacific Coast Feeding Aggregation (or Pacific Coast Feeding Group—PCFG). This small group of gray whales (approximately 200 animals) forages in waters from Northern California to Northern British Columbia, including waters in and adjacent to the Makah U&A during the summer. The measures include allowing hunting only from December 1 through May 30 (avoiding the summer, when PCFG whales predominate), restricting

hunting to the coastal portion of the Tribe's U&A (avoiding the Strait of Juan de Fuca, where PCFG whales predominate), and establishing an allowable bycatch level for PCFG whales. The Makah Tribe's proposal includes other standards for hunting, such as: (1) Monitoring and adaptive management measures to ensure that any incidental harvest of gray whales from the PCFG remains at or below the annual bycatch level, (2) measures to ensure that hunting is conducted in the most humane manner practicable, consistent with continued use of traditional hunting methods, and (3) measures to protect public safety. The full waiver request is posted online at *http://www.nwr.noaa.gov/Marine-Mammals/Whales-Dolphins-Porpoise/Gray-Whales/Index.cfm.*

On May 9, 2008, we released a draft environmental impact statement (DEIS) that analyzed impacts to the human environment from the Makah Tribe's request and five alternatives, including no action. The alternatives varied the principal components of a hunt, including: The time when whale hunting would occur; the area where whale hunting would occur; the annual and 5-year limits on the number of whales harvested, struck, and struck and lost; cessation of whale hunting if a predetermined number of PCFG whales were harvested; and the method of hunting.

We held three public meetings and received over 300 comments on the DEIS during the 98-day comment period. In the fall of 2008 we began developing responses to these comments and considering whether any new alternative(s) might be needed to address some comments. A substantial number of comments were concerned with potential hunting impacts on PCFG whales.

Soon after releasing the DEIS, several substantive scientific issues arose that required an extended period of consideration in our NEPA analysis. First, NMFS scientists determined that population estimates for ENP gray whales should be re-analyzed due to potential biases in those estimates. That analysis was completed in December 2009 (Laake *et al.,* 2009) and led to subsequent modeling work by Punt and Wade (2010), who concluded that the ENP stock was within its ''optimum sustainable population'' size. That conclusion was accepted by NMFS in its stock assessment report for ENP gray whales (Allen and Angliss, 2010), and the papers by Laake (2009) and Punt and Wade (2010) were also reviewed and endorsed by the IWC Scientific Committee. In addition, in 2010 and 2011, researchers studying the genetics of ENP and PCFG whales found evidence of population substructure indicating that PCFG whales may warrant consideration as a separate management unit (Frasier *et al.,* 2011; Lang *et al.,* 2011). More recently, researchers tracking and sampling gray whales discovered that at least some individuals from summer feeding grounds utilized by the endangered western stock migrate across the Pacific and into areas used by ENP gray whales (including the Makah U&A) (Lang *et al.,* 2010; IWC, 2011; Mate *et al.,* 2011; Weller *et al.,* 2011). We have made the studies cited above and related information available on our Web site (see **FOR FURTHER INFORMATION CONTACT**).

This information is central to our consideration of the Tribe's request under the MMPA and to our NEPA analysis. Moreover, the information is also under active consideration by the IWC as part of a regular implementation review of ENP gray whales to assess whether changes are needed in the international harvest scheme for these whales. The IWC Scientific Committee is scheduled to meet this summer and conclude its review of gray whales by June 23, 2012; the IWC will consider that review at its annual meeting, which ends July 6, 2012. Documents and reports are typically posted on the IWC Web site at *http://www.iwcoffice.org/meetings/reportsmain.htm.* We encourage interested parties to review these documents and reports as soon as they become available during the public comment period on this notice.

Considerations

Pursuant to NEPA, NMFS must: (1) Take a hard look at the environmental consequences of its proposed action to subsequently develop an informed decision; (2) ensure that NEPA reviews provide high quality environmental information via clear and concise documentation; and (3) ensure that the high quality environmental information related to the proposed action is available to the public before the agency makes its decision (40 CFR 1500). In light of the substantial new scientific information described above, and the amount of time that has elapsed since the 2008 DEIS was published for comment, we conclude it is appropriate to formally terminate that DEIS and to begin preparation of a new EIS that is informed by the substantial new information, upcoming IWC proceedings, and public input.

We have identified the following preliminary alternatives for public consideration and comment before the range of reasonable alternatives is finalized. This set of alternatives differs somewhat from those examined in the 2008 DEIS, reflecting public comments we received on the 2008 DEIS and our current understanding of the new scientific information described above. Preliminary alternatives include:

Alternative 1: No Action—Under the No Action Alternative, we would not waive the take moratorium under the MMPA, nor issue the regulations or permits to authorize a tribal hunt.

Alternative 2: The Tribe's Proposed Action—We would waive the take moratorium and issue regulations that would allow us to issue permits to the Makah Tribe to hunt gray whales under the terms proposed in its waiver request.

Alternative 3: Offshore Hunt—We would waive the take moratorium and issue regulations that would allow us to issue permits to the Makah Tribe to hunt gray whales under the terms proposed in its waiver request, except hunting would be allowed only in offshore waters at least three miles from shore.

Alternative 4: Summer-only Hunt—We would waive the take moratorium and adopt regulations that would allow us to issue permits to the Makah Tribe to hunt gray whales under the terms proposed in its waiver request except hunting would only be allowed during the period June 1 through November 30, to minimize the potential for taking a gray whale migrating to or from the western North Pacific.

Alternative 5: Adaptive Management Hunt—We would waive the take moratorium and adopt regulations that would allow us to issue permits to the Makah Tribe to hunt gray whales in the coastal portion of the Tribe's U&A under an adaptive management scheme that would allow for flexibility in: Permit terms; hunting seasons; allowable levels of struck, struck and lost, and landed whales up to the levels proposed by the Tribe; and methods of calculating an allowable bycatch level for PCFG whales.

The EIS assessment will identify potentially significant direct, indirect, and cumulative impacts on a variety of resources, including:

- Marine Habitat and Species
- Gray Whales
- Other Wildlife Species
- Economics
- Environmental Justice
- Social Environment
- Cultural Resources
- Ceremonial and Subsistence Resources
- Noise
- Aesthetics

- Transportation
- Public Services
- Public Safety
- Human Health
- National and International Regulatory Environment

For all potentially significant impacts, the EIS will identify measures to avoid, minimize, and mitigate impacts, where feasible, to a level below significance.

Request for Comments

We provide this notice to: (1) Advise other agencies and the public of our intentions; (2) obtain suggestions and information on the scope of issues to include in the EIS; and (3) terminate the prior notice of intent to prepare an EIS published on May 9, 2008 (73 FR 26375). In addition to considering the comments we receive in response to this notice in developing a new DEIS, we will consider the comments received on the 2008 DEIS. When we publish a new DEIS we will respond in writing to comments received on the 2008 DEIS. We invite comments from all interested parties to ensure that the full range of issues related to the Makah Tribe's waiver request and all significant issues are identified. We request that comments be as specific as possible. We seek public input on all aspects of our NEPA analysis, including any new information that we should take into consideration; the range of reasonable alternatives; and associated impacts of any alternatives on the human environment.

Comments concerning this environmental review process should be directed to NMFS (see **ADDRESSES**). See **FOR FURTHER INFORMATION CONTACT** for questions. All comments and material received, including names and addresses, will become part of the administrative record and may be released to the public.

Authority

The environmental review of continuation of the Makah Tribe's subsistence gray whale hunting will be conducted under the authority and in accordance with the requirements of NEPA, Council on Environmental Quality Regulations (40 CFR parts 1500–1508), other applicable Federal laws and regulations, and policies and procedures of NMFS for compliance with those regulations. This notice is being furnished in accordance with 40 CFR 1501.7 to obtain suggestions and information from other agencies and the public on the scope of issues and alternatives to be addressed in the EIS.

Dated: May 11, 2012.

Helen M. Golde,

Acting Director, Office of Protected Resources, National Marine Fisheries Service.

[FR Doc. 2012–12262 Filed 5–18–12; 8:45 am]

BILLING CODE 3510–22–P

DEPARTMENT OF COMMERCE

National Oceanic and Atmospheric Administration

RIN 0648–XA595

Marine Mammal Stock Assessment Reports

AGENCY: National Marine Fisheries Service (NMFS), National Oceanic and Atmospheric Administration (NOAA), Commerce.

ACTION: Notice of availability; response to comments.

SUMMARY: As required by the Marine Mammal Protection Act (MMPA), NMFS has incorporated public comments into revisions of marine mammal stock assessment reports (SARs). The 2011 reports are final and available to the public.

ADDRESSES: Electronic copies of SARs are available on the Internet as regional compilations and individual reports at the following address: *http://www.nmfs.noaa.gov/pr/sars/.* You also may send requests for copies of reports to: Chief, Marine Mammal and Sea Turtle Conservation Division, Office of Protected Resources, National Marine Fisheries Service, 1315 East-West Highway, Silver Spring, MD 20910–3226, Attn: Stock Assessments.

Copies of the Alaska Regional SARs may be requested from Robyn Angliss, Alaska Fisheries Science Center, 7600 Sand Point Way, BIN 15700, Seattle, WA 98115.

Copies of the Atlantic Regional SARs may be requested from Gordon Waring, Northeast Fisheries Science Center, 166 Water Street, Woods Hole, MA 02543.

Copies of the Pacific Regional SARs may be requested from Jim Carretta, Southwest Fisheries Science Center, NMFS, 8604 La Jolla Shores Drive, La Jolla, CA 92037–1508.

FOR FURTHER INFORMATION CONTACT: Shannon Bettridge, Office of Protected Resources, 301–427–8402, *Shannon.Bettridge@noaa.gov;* Robyn Angliss, Alaska Fisheries Science Center, 206–526–4032, *Robyn.Angliss@noaa.gov;* Gordon Waring, Northeast Fisheries Science Center, 508–495–2311, *Gordon.Waring@noaa.gov;* or Jim Carretta, Southwest Fisheries Science Center, 858–546–7171, *Jim.Carretta@noaa.gov.*

SUPPLEMENTARY INFORMATION:

Background

Section 117 of the MMPA (16 U.S.C. 1361 *et seq.*) requires NMFS and the U.S. Fish and Wildlife Service (FWS) to prepare SARs for each stock of marine mammals occurring in waters under the jurisdiction of the United States. These reports contain information regarding the distribution and abundance of the stock, population growth rates and trends, the stock's Potential Biological Removal (PBR) level, estimates of annual human-caused mortality and serious injury from all sources, descriptions of the fisheries with which the stock interacts, and the status of the stock. Initial reports were completed in 1995.

The MMPA requires NMFS and FWS to review the SARs at least annually for strategic stocks and stocks for which significant new information is available, and at least once every 3 years for non-strategic stocks. NMFS and FWS are required to revise a SAR if the status of the stock has changed or can be more accurately determined. NMFS, in conjunction with the Alaska, Atlantic, and Pacific Scientific Review Groups (SRGs), reviewed the status of marine mammal stocks as required and revised reports in each of the three regions.

As required by the MMPA, NMFS updated SARs for 2011, and the revised reports were made available for public review and comment for 90 days (76 FR 52940, August 24, 2011). NMFS received comments on the draft SARs and has revised the reports as necessary. The final reports for 2011 are available on NMFS' Web site (see **ADDRESSES**).

Comments and Responses

NMFS received letters containing comments on the draft 2011 SARs from the Marine Mammal Commission (Commission), six non-governmental organizations (Humane Society of the United States, Cascadia Research Collective, Center for Biological Diversity, Center for Coastal Studies, Garden State Seafood Association, and Hawaii Longline Association), the Western Pacific Regional Fisheries Management Council, and one individual.

Many comments recommended initiation or repetition of large data collection efforts, such as abundance surveys, observer programs, or other efforts to estimate mortality. Many comments, including those from the Commission, recommending additional data collection (e.g., additional

abundance surveys or observer programs) have been addressed in previous years. Although NMFS agrees that additional information would improve the SARs and inform conservation decisions, resources for surveys and observer programs are fully utilized and no new large surveys or other programs may be initiated until additional resources are available. Such comments on the 2011 SARs, and responses to them, may not be included in the summary below because the responses have not changed. Comments on actions not related to the SARs (e.g., convening a Take Reduction Team or listing a marine mammal species under the Endangered Species Act (ESA)) are not included below. Comments suggesting editorial or minor clarifying changes were incorporated in the reports but are not included in the summary of comments and responses below.

In some cases, NMFS' responses state that comments would be considered or incorporated in future revisions of the SAR rather than being incorporated into the final 2011 SARs. These delays are due to the schedule of the review of the reports by the regional SRGs. NMFS provides preliminary copies of updated SARs to SRGs prior to release for public review and comment. If a comment on the draft SAR suggests a substantive change to the SAR, NMFS may discuss the comment and prospective change with the SRG at its next meeting.

Comments on National Issues

Comment 1: The Commission recommends that NMFS develop a nationwide, 5-year schedule for carrying out stock assessments that reflects projections and priorities for available ship and aircraft time, and identifies the funding necessary to complete marine mammal population surveys.

Response: NMFS agrees that such a schedule would be useful, and is currently in the process of developing a strategic plan to focus on resource acquisition and a prioritization scheme to meet stock assessment goals. The plan is expected to address the economic value of conducting regular stock assessments, identifying data needs, and revising performance measures to track stock progress. In addition, such a plan would potentially account for depleting budgets and resource constraints by recommending more efficient use of ship time through multi-species ecosystem studies, better survey designs and sampling technologies, and leveraging inter- and intra-agency resources. A 2012 fall workshop is being planned to address some of these objectives.

Comment 2: The Commission repeats its 2010 recommendation that NMFS review its observer programs nationwide, set standards for observer coverage, identify gaps in existing coverage, and determine the resources needed to (1) observe all fisheries that directly interact or may directly interact with marine mammals, especially strategic stocks and (2) provide reasonably accurate and precise estimates of serious injury and mortality levels.

Response: NMFS has conducted multiple comprehensive nationwide reviews of its observer programs. In 2011, NMFS published the first edition of the National Bycatch Report, which provided a nation-wide compilation of bycatch estimates in U.S. commercial fisheries. The Report included information on bycatch sampling and estimation methods, a framework for evaluating the quality of bycatch estimates, and performance measures for monitoring improvements to bycatch data quality and estimates over time. The report identifies gaps in existing observer coverage with specific recommendations for additional resources required to improve bycatch data collection and estimation methods, which will form the basis of a funding strategy to support adequate observer programs for all living marine resources. The report is the first in a planned series of national bycatch reports designed to track and report on efforts to monitor bycatch.

NMFS has taken several steps in recent years to address shortcomings in protected species observer coverage, including increased observer coverage in the Gulf of Mexico reef fish fishery, the North Carolina inshore gillnet fishery, the American Samoa longline fishery, and the Gulf of Mexico menhaden purse seine fishery. NMFS is preparing to observe the Southeast Alaska drift gillnet fishery, beginning in 2012.

Comment 3: The Commission recommends that NMFS partner in 2012 with state fishery management agencies, the fishing industry, and other stakeholders to develop a funding strategy that will substantially improve the extent and level of observer coverage and data collection concerning incidental serious injury and mortality of marine mammals within five years.

Response: NMFS is seeking to improve its capacity to address marine mammal interactions through the Marine Mammal Take Reduction Program, enhanced observer coverage and gear marking, and further characterizations of fishing gear and the nature of interactions. Observer coverage is not particularly helpful or practical in certain fisheries, such as those using trap/pot gear. For those trap/pot fisheries, NMFS is working to develop or increase requirements for gear marking to help identify gear that may be recovered from an entangled animal.

Comment 4: The Commission recommends that NMFS develop alternative strategies for collecting information on mortality and serious injury levels in fisheries for which entanglements are difficult to detect or quantify using traditional observer programs. Alternatives include more comprehensive gear-marking or gear-tracking requirements. At a minimum, gear markings should enable NMFS to identify the fishery, region, and gear part of any gear removed from whales, and ideally markings should be ''readable'' at a distance.

Response: See response to Comment 3.

Comment 5: To best manage transboundary stocks, the Commission recommends that NMFS collaborate with other nations and international fishery management organizations to develop and implement cooperative or complementary strategies for assessing stock status and the rate of serious injury and mortality in fisheries. Priority should be given to those stocks that are known to interact significantly with fisheries. The goal should be to manage transboundary stocks using a PBR level calculated for the entire stock considering all bycatch, something that has been suggested in the proposed revisions to the stock assessment guidelines.

Response: NMFS has previously responded to this comment (see 76 FR 34054, June 10, 2011, comment 2) as follows: ''NMFS, through the Office of International Affairs, is preparing a comprehensive international action plan for marine mammal conservation. As this plan is being developed, NMFS is also evaluating strategies to obtain information on the marine mammal conservation programs in other nations pursuant to MMPA section 101(a)(2).'' This action plan will likely be released in mid- 2012. In addition, NMFS collaborates closely with Canada on research, monitoring, and management for species in the NMFS Northwest and Northeast regions and with Regional Fisheries Management Organizations where appropriate. NMFS is also working within Regional Fisheries Management Organizations to identify fisheries with bycatch and to adopt conservation and management measures to reduce that bycatch.

Comment 6: The Commission recommends that NMFS consider the various approaches that are available for integrating all human-related risk factors into stock assessments and adopt an integration method that will produce, at a minimum, reasonable estimates of the lower and upper bounds of serious injury and mortality rates for every stock.

Response: NMFS has previously responded to this comment (see 76 FR 34054, June 10, 2011, comment 3). as follows: ''MMPA section 117(3) contains directions for including risk factors in SARs. The MMPA states that SARs should estimate annual human-caused mortality of each stock, by source, and, for strategic stocks, other factors that may be causing a decline or impeding recovery of the stock, including effects on marine mammal habitat and prey.''

Comment 7: All stock assessments should be updated to include habitat issues. Habitat loss and degradation rank among the primary threats to most marine mammals. In light of changing ocean conditions in response to global warming and ocean acidification, these habitat threats should also be discussed in the habitat section.

Response: NMFS has previously responded to this and similar comments (see 76 FR 34054, June 10, 2011, comment 22; 75 FR 12498, March 16, 2010, comments 1 and 6). Where appropriate, NMFS strives to include this information and will provide updates when new data become available.

Comment 8: NMFS must update abundance estimates for many stocks with only old population data. Given the precautionary principles incorporated into the MMPA, any such stock should be declared ''strategic,'' because the lack of a PBR makes it impossible for NMFS to conclude that the stock does not meet the definition of strategic.

Response: According to the NMFS 2005 Guidelines for Assessing Marine Mammal Stocks, if abundance or human-related mortality levels are truly unknown, some judgment will be required to make this determination about stock status. If there is known or suspected human-caused mortality of a stock, decisions about whether such stocks should be declared strategic or not should be made on a case-by-case basis. Stocks for which the minimum population estimate (Nmin) becomes unknown should not move from ''strategic'' to ''not-strategic'', or vice versa, solely because of an inability to estimate Nmin (or PBR).

Comment 9: The threat of sonar and other military training exercises should be discussed for all stocks that may be exposed to such activities in the Atlantic and Pacific.

Response: MMPA section 117(3) contains directions for including risk factors, stating that SARs should contain estimates of annual human-caused mortality of each stock, by source, and, for strategic stocks, other factors that may be causing a decline or impeding recovery of the stock, including effects on marine mammal habitat and prey. As very few serious injuries and mortalities can be directly attributable to military training exercises, the impacts of this potential threat can be difficult to assess. Where appropriate, NMFS strives to include this information and will provide updates when new data become available.

Comments on Atlantic Regional Reports

Technical changes: First, since publication of the draft 2011 SAR for North Atlantic right whales, three technical changes have been made to the report. In its February 2012 meeting, the Atlantic SRG recommended that for the North Atlantic right whale SAR, the default Rmax for cetaceans (0.04) be used rather than the observed net growth rate (0.024). This results in an increase in PBR from 0.5 to 0.8.

Second, subsequent to publication of the draft 2011 North Atlantic right whale SAR, NMFS noticed a mistake in reporting the U.S. and Canadian serious injuries and mortalities. In the draft SAR, all the reported fishery-caused serious injuries and mortalities were attributed to U.S. fisheries (i.e., all injured or dead animals were seen in U.S. waters and no information was available to indicate that the serious injuries or mortalities were caused by a Canadian fishery). The report writers mistakenly recorded the ratio of seriously injured animals to mortalities (0.4 to 0.6) as the ratio of U.S. to Canadian serious injuries and mortalities. In the final 2011 SAR, the ratio of U.S. to Canadian serious injuries and mortalities is corrected, and all fishery serious injury and mortality is correctly assigned to U.S. fisheries (0.8).

Third, adult (North Atlantic right whale) male #1980, which was observed on 2/3/2008 with an apparent constricting wrap of line and in declining condition, was initially determined to be a serious injury. That animal was observed gear free in 2011, and has been removed from the serious injury list. This resulted in a decrease in the reported fishery serious injuries and mortalities from 1.0 to 0.8 in the final 2011 SAR.

Comment 10: The Commission recommends that NMFS conduct the required surveys of North Atlantic pinniped stocks, incorporate the results into SARs, and use that information to manage those stocks and the risk factors affecting them.

Response: In spring 2011, the Northeast Fisheries Science Center (NEFSC) conducted live capture/tagging of harbor seals to obtain a survey correction factor for the scheduled late May/early June abundance survey along the coast of Maine. The aerial survey was not completed due to fog during the entire survey window. The NEFSC is scheduled to repeat this project in spring 2012. Further, the NEFSC has begun counting archived images collected during the 2005–2011 seasonal monitoring surveys in southeastern Massachusetts coastal waters. These areas contain the largest number of gray seals in U.S. waters. The goal is to obtain a minimum raw count of non-pup gray seals. In addition, images from monitoring surveys of gray seal pupping colonies in Maine and Massachusetts are also scheduled to be counted.

Comment 11: The Commission recommends that NMFS improve stock assessments for bottlenose dolphins in both the Atlantic and the Gulf of Mexico by conducting the research needed to resolve questions concerning stock structure, provide more accurate and precise estimates of the abundance and trends of the various stocks, and provide more accurate and precise estimates of the level of serious injury and mortality in fisheries and from other human activities.

Response: NMFS has taken a number of actions that will improve stock assessments of bottlenose dolphins in the Gulf of Mexico and Atlantic Ocean. In 2010, NMFS collected biopsy samples of bottlenose dolphins in Pamlico Sound, NC. These samples and those collected in adjacent areas will be used to further refine the genetic stock structure of bottlenose dolphins in the North Carolina region and aid in the ongoing Bottlenose Dolphin Take Reduction Plan. As part of the Deep Water Horizon oil spill Natural Resource Damage Assessment (NRDA), NMFS and the National Ocean Service have been conducting seasonal stock structure and abundance research in oiled areas of Louisiana and Mississippi (Barataria Bay, Mississippi Sound, and Chandeleur Sound). These studies began in May 2010 and will continue through at least spring 2012. NMFS and the Department of the Interior's Bureau of Ocean Energy Management, working under an Interagency Agreement, will conduct bottlenose dolphin stock structure research in the northern Gulf of Mexico in 2012 and 2013. This work

will be conducted in bay, sound or estuary areas that have not been previously sampled. NMFS conducted a Commission-supported workshop in 2011 to refine best practices for conducting mark-recapture studies to estimate the abundance of bay, sound and estuary populations of bottlenose dolphins. The report of the workshop proceedings was prepared and is available for the public.

Comment 12: The Commission recommends that NMFS develop a stock assessment plan for the Gulf of Mexico that describes (1) a feasible strategy for assessing the Gulf's marine mammal stocks and (2) the infrastructure, expertise, and funding needed to implement it.

Response: NMFS has produced two documents that describe a feasible strategy for assessing the Gulf's marine mammal stocks and the required infrastructure, expertise, and funding to implement the strategy: (1) The Southeast Fisheries Science Center Marine Mammal Program Strategic Plan (2008) and (2) the North-Central Gulf of Mexico Bottlenose Dolphin Research Plan (2007). Both plans need to be updated to reflect changes in staffing, resources, and research conducted since 2008. NMFS also worked closely with the Commission to develop a strategic marine mammal research plan in response to the Deep Water Horizon oil spill.

Comment 13: While we understand that these SARs provide mortality information only through 2009, the fact that NMFS is aware of the Deepwater Horizon disaster of 2010 warrants a mention in SARs for the Gulf of Mexico. The only discussion of habitat impacts relates to disturbance from construction or removal operations.

Response: As the Natural Resource Damage Assessment process continues and is not complete, NMFS cannot report on unconfirmed mortalities or speculate on habitat impacts. The potential impacts of the Deep Water Horizon oil spill on Gulf of Mexico cetacean stocks and habitat are expected to be included in the 2012 SARs.

Comment 14: Bottlenose dolphin stocks in the Gulf of Mexico should be designated strategic. NMFS should convene a bottlenose dolphin take reduction team for the Gulf. Between February 2010 and October 30, 2011, NMFS has documented 586 cetacean ''strandings'' in the Northern Gulf of Mexico, of which 95% stranded dead. Most of these were bottlenose dolphins. A common bacterium known to cause abortions in marine mammals killed some of the hundreds of dolphins—more than 100 of them calves and fetuses.

Response: The status of stocks in the 2011 SARs is based on mortality and serious injury data through 2009. All of the 32 Gulf of Mexico bay, sound and estuary, and the western coastal bottlenose dolphin stocks are designated as strategic in the 2011 SAR. We will continue evaluating the status of these stocks as well as the eastern and northern coastal, continental shelf and oceanic bottlenose dolphin stocks for the 2012 SARs.

NMFS does not have enough information to convene a take reduction team for the Gulf of Mexico, which would be based only on fisheries-related mortality. While an unprecedented number of bottlenose dolphins continue stranding in the northern Gulf, data have not yet been analyzed to determine which stocks are affected by the ongoing Unusual Mortality Event (UME). NMFS will continue evaluating the impact of these mortalities as part of the UME investigation and the need for a take reduction team.

Comment 15: Long-finned and short-finned pilot whales should both be considered strategic. In the Atlantic, two short-finned pilot whales died stranded on Massachusetts beaches in 2011. These pilot whales typically are not found this far north and range in the warmer waters such as the Gulf of Mexico and the ocean off Florida. Additionally, a pod of more than 20 pilot whales stranded in multiple areas in shallow Gulf of Mexico waters and mangroves. A majority of the pilot whales died.

Response: Strandings are not part of the status of stocks determination unless the cause of the stranding is attributed to human activity. Human factors were not identified in these two stranding events. In the cases where strandings are caused by human activities, any human-caused mortality and serious injury data would be compiled and evaluated with respect to the PBR for the stock.

Comment 16: All SARs for marine mammals that range in the Gulf of Mexico should be updated to include threats from oil spills and associated oil and gas drilling activities, including seismic exploration activities. Specifically, NMFS must consider the Deepwater Horizon oil spill in 2010 as well as any new information concerning its impacts on marine mammals.

Response: NOAA is estimating the impacts of the Deep Water Horizon oil spill, including mortality, as part of the ongoing Natural Resource Damage Assessment process. When that process is complete, the SARs will be updated to reflect any potential impacts to marine mammals. NMFS agrees that a summary of the potential impacts of oil and gas-related activities on marine mammals is appropriate for the Gulf of Mexico SARs. For each SAR, NMFS is developing a habitat section that will be included in future SARs. This section will attempt to address the potential impacts of human activities on a marine mammal stock including, if appropriate, oil and gas-related activities.

Comment 17: We ask that the SAR for right whales include mortalities and serious injuries more recent than 2 years old (in this case from 2009, so the data will be 3 years behind by the time the SAR is finalized). NMFS provides more timely summaries to the Atlantic Large Whale Take Reduction Team on an annual or shorter basis, and the annual meeting of the right whale Consortium has a presentation of mortalities and serious injuries since the prior meeting 12 month earlier. NMFS has this information and should use it in the SAR for this species where no extrapolation for fishing effort is required that would slow the process. Delaying this information hampers efforts to the magnitude of (or trend in) anthropogenic impacts to the species. This comment is also germane to humpback and fin whales.

Response: NMFS strives to include the most recent data on serious injury and mortality in each SAR, but this information requires analysis and confirmation before being included and published. Draft SARs are reviewed by regional SRGs as early as the fall of the year prior to publication, and the information must be accurate at that time. Further lag time is necessitated by the 90-day public comment period and the agency clearance and publication processes.

Comment 18: It is not clear why the region proposes removing the last paragraph of the section on Human-Caused Mortality and Serious Injury in the humpback whale report that contains a discussion of the need to better understand the level of anthropogenic mortality by assuring recovery of carcasses and necropsy.

Response: NMFS acknowledges that the reference to observer coverage in the paragraph is misleading because those activities have almost no influence on the counts of takes. Because these counts are minimums, they most likely understate the level of human interactions mentioned in paragraph 3 of the ''annual human-caused serious injury and mortality'' section. The paragraph is retained and the phrase ''fishery observer data'' is changed to ''data assessed for serious injury and mortality.''

Comment 19: There is an apparent omission in the detailing of mortalities of humpback whales. We note the following case from the NOAA's large whale stranding data base (NER020608Mn). The comment accompanying the documentation of this February 6, 2008 mortality was ''Carcass reported by NOAA Fisheries observer Red nylon cord wrapped ~4–5 times around fluke, possibly identified as lobster gear.''

Response: This event did not meet the criteria for inclusion because NMFS could not confirm from the available data that the wraps were constricting, and no necropsy was conducted to confirm the associated hemorrhaging.

Comment 20: The SAR for short-beaked common dolphin states that there were ''annual research activity mortalities and serious injuries that were not included in the bycatch estimates.'' We believe that these fishery-related mortalities (albeit during research activities) must be included in the estimates. We assume that the 0.2 estimate for the 5 year average is the result of the single take in a monkfish research gillnet in 2009 as discussed in the text. We also remind the region that, to the best of our knowledge, it does not possess authorization for these sorts of mortalities and should seek formal incidental take authorization for its research.

Response: Wording in the SAR that says the common dolphin research take was not included in the bycatch estimates is not correct and has been removed. In fact, the 0.2 addition to the five-year average for this take was added twice, as it was already accounted for in the bycatch table. However, the Northeast Sink Gillnet fishery mean annual mortality number has been revised to 27 to account for a rounding error. The NEFSC is in the process of obtaining authorization for fishery-related research takes (see response to comment 21).

Comment 21: It is evident that harbor porpoise mortality continues to exceed PBR. To add to the species' woe, the SAR details the mortality of 12 porpoises in a monkfish research fishery in 2009. If this level of mortality resulted from nets fished outside the harbor porpoise management areas, it may be an indication that these areas are not sufficiently protective of this stock. It is also important to note that, to the best of our knowledge, the region does not possess authorization for research-related mortalities and needs to seek formal incidental take authorization for its fishery research.

Response: The NEFSC is in the process of issuing letters of authorization under the MMPA for fishery-related research takes where needed to supplement existing MMPA and ESA scientific research permits.

Comment 22: Abundance estimates are outdated for harbor, harp, and gray seals. The sections on other mortality give short shrift to the discussion of illegal shooting that is an increasing problem. The region needs to devote at least a sentence or two in the SARs addressing the numbers of animals found illegally shot as it helps inform potential trends in and sources of anthropogenic mortality.

Response: Information has been added to the 2011 SARs indicating the estimated number of seals injured and killed by illegal shootings. From 2005–2009, there were 7 harbor seals, 3 harp seals, 1 gray seal, 1 hooded seal, and 2 unidentified seals reported as having been shot in the NOAA Northeast and Southeast marine mammal stranding databases.

Comment 23: The change in the abundance estimate for Atlantic white-sided dolphins and consequent reduction in the PBR results in fishery-related mortality once again exceeding PBR. NMFS has convened take reduction teams to address fishery-related bycatch of this and other species. It would seem particularly important to review the measures under the take reduction plan for the Northeast Bottom Trawl fishery.

Response: The NEFSC is currently investigating the past and present trends in abundance and bycatch estimates of Atlantic white-sided dolphins. This will determine the most appropriate current bycatch estimates and determine whether the abundance estimates are changing due to analytical reasons, changes in the dolphin's spatial-temporal use of U.S. waters, or fishery-related mortality. The results of these investigations will likely be available in early 2013, at which time NMFS will determine if the Atlantic Trawl Gear Take Reduction Team will meet to review and discuss possible measures to reduce bycatch to below PBR.

Comment 24: According to the draft SAR, the population estimate for white-sided dolphin is based upon ''the sum of the 2006 and 2007 surveys,'' yet the 2006 and 2007 surveys covered an area where you would not expect to find components of the white-sided dolphin stock and was conducted during a time when you would expect low observations, resulting in low estimates. Why is there no ''Current Population Trend Analysis'' for this stock? What are the results of the 2008, 2009, 2010 surveys for the white-sided dolphins?

Response: See response to comment 23.

Comment 25: The estimate of Nmin for white-sided dolphin is the only case in the Atlantic Ocean in 2011 in which the population estimate fluctuated more than 1% in either direction, in fact it was reduced by about 60%. This reduction has caused the stock to be considered strategic, a designation that usually triggers a take reduction team meeting and possibly the implementation of additional regulations with serious negative impacts on the fishing fleets. What additional analyses will be conducted to verify this estimate? Why would the Agency initiate a Take Reduction Team without the results of Spring/Fall Surveys conducted in 2011 and 2012?

Response: See response to comment 23.

Comment 26: The draft 2011 white-sided dolphin SAR contains the statement that ''The total number of white-sided dolphins along the eastern U.S. and Canadian Atlantic coast is unknown.'' The Summary Table 1 for all ''Atlantic Marine Mammal Stocks'' shows that the Nmin and PBR estimates for 19 stocks are considered ''unknown'', and that 32 other separate stocks are considered ''undetermined.'' Why is the Nmin & PBR for white-sided dolphin not ''unknown'' or ''undetermined''? What is the justification for a ''strategic'' designation?

Response: To clarify this section, NMFS has reworded the text in the SAR to read ''Abundance estimates of white-sided dolphins from various portions of their range are available * * *.''. The designation of a population estimate as ''unknown'' is used for stocks which are rarely seen in surveys and thus no estimates can be generated. The designation ''undetermined'' is used for the PBR of a stock with abundance estimates too old to be used in the PBR calculation. Atlantic white-sided dolphins became strategic because the best abundance estimate resulted in a PBR that was lower than the mortality estimate. It is recognized, however, that the inter-annual variability of recent white-sided dolphin estimates has been high, and, as mentioned above, this is something NMFS is investigating.

Comment 27: The draft 2011 gray seal SAR states that ''Present data are insufficient to calculate the minimum population estimate for U.S. waters.'' Identical statements have been made in every Marine Mammal Stock Assessment since 2005. Furthermore, the draft 2011 SAR states that ''Current estimates of the total western Atlantic gray seal population are not available.''

We strongly recommend that resources be immediately devoted to delivering a valid determination.

Response: See response to comment 10.

Comment 28: The draft 2011 Gulf of Maine humpback whale SAR states that ''Not all whales migrate to the West Indies every winter * * *.'' As a minor point of clarification, the only direct support for overwintering by this stock is in the Gulf of Maine, where a small number of individual juveniles have been re-sighted across a winter season (Clapham *et al.,* 1993; Robbins, 2007). It has not yet been determined whether whales observed off the mid-Atlantic and southeast U.S. necessarily overwinter.

Response: NMFS agrees that more research is needed to determine whether these whales remain in the Gulf of Maine. NMFS maintains that the sentence is accurate as written, as it does not specify wintering grounds.

Comment 29: There is a long paragraph in the draft report that discusses changes in the spatial distribution of Gulf of Maine humpback whales in relation to prey abundance. I suggest that this paragraph be revised, as it is now quite dated and missing information from more recent years.

Response: The paragraph is still accurate and discusses an important aspect of humpback ecology.

Comment 30: Robbins (2009) calculated the minimum number of Gulf of Maine humpback whales alive in 2003 to be 783 individuals. This was based on the number photo-identified in 2003 plus the whales that were seen both before and after that year. This number was calculated based on intensive research effort as part of the MONAH project and is likely the best minimum estimate available for this population.

Response: The 2003 estimate to which the commenter refers has considerable unquantifiable uncertainty due to its age. As recommended in the Guidelines for Assessing Marine Mammal Stocks Workshop Report (Wade and Angliss 1997), abundance estimates older than eight years should not be used for calculationing PBR.

Comment 31: The draft 2011 Gulf of Maine humpback whale SAR states that 6.5% growth is close to the theoretical maximum for this population, while it appears to have been calculated using only the observed survival and reproduction values from the same time period. Seeing as none of the population growth rate estimates are current, I am uncertain of the value of comparing them to a theoretical maximum. Zerbini *et al.* (2010) is now the most recent reference for this work.

Response: NMFS has added references and raised Rmax in the SAR for this stock based on the literature referenced. Given regional variability across different ecosystems and MMPA's precautionary appraoch, NMFS will not apply the global theoretical value noted in Zerbini, *et al.* (2010).

Comment 32: Previous Gulf of Maine humpback whale SARs have considered unassigned human-caused serious injury and mortality cases to be all or none Gulf of Maine whales. I suggest that takes instead be allocated probabilistically based on the proportion of Gulf of Maine whales identified in these areas.

Response: Unless proven to be from a different stock, NMFS assigns Gulf of Maine humpback whale human-caused mortality or serious injury cases first discovered in U.S. waters to the Gulf of Maine stock. This is the most risk-averse approach for the stock. Given the very small sample sizes of serious injuries and mortalities for this stock, it is not practicable to allocate takes probabilistically.

Comment 33: Minimum serious injury and mortality determinations may not be appropriate for comparison to PBR based on studies evaluating the effectiveness of PBR with underestimated mortality (Wade, 1998). I recommend that further work be done to assess the appropriateness of a minimum mortality metric for comparison to PBR or evaluate the possible effect on stocks using a plausible range of mortality estimates.

Response: NMFS is considering adopting this approach and, once the methods are vetted and approved, will include it in future stock assessments.

Comment 34: The information presented for scar-based studies of entanglement is outdated. Current results and inferences should be drawn from the most recent technical reports (Robbins, 2009, 2010, 2011). For example, data support that juveniles (not just yearlings) are more likely to be entangled, and that less than 10% of entanglements are reported annually, with approximately 3% of the population dying from entanglement each year. Benjamins *et al.* (2011) is now the most current publication on humpback whale entanglements off Newfoundland.

Response: The commenter listed two publications not available until after the draft 2011 SAR was made available to the public. This information will be incorporated into the 2012 SAR as appropriate.

Comments on Pacific Regional Reports

Comment 35: The Commission recommends that NMFS conduct the necessary surveys to update SARs for harbor seals along the Oregon and Washington coasts and in Washington inland waters.

Response: The Alaska Fisheries Science Center and the Northwest Regional Office requested funding for both harbor seal and harbor porpoise surveys in 2011; however, these surveys were not funded.

Comment 36: The Commission recommends that NMFS maintain and enhance existing collaborations to obtain the data necessary to generate stock assessments for all Pacific Island cetaceans within U.S. jurisdiction, and to seek new opportunities, such as collaborating with the Navy, to leverage resources for accomplishing this challenging task.

Response: NMFS agrees and is actively engaged in collaborative research within the Pacific Islands region to generate the data necessary for future stock assessments. In 2011 and in 2012, the U.S. Navy provided partial support to NMFS for surveys in the Marianas regions, a partnership NMFS hopes to maintain in to the future in order to satisfy NMFS and Navy mandates.

Comment 37: Though the region may have reviewed the stock assessments for the ESA-listed stocks (e.g., blue whales, humpback whales, etc.), there is no mention made of this. In fact, there is new information for a number of these stocks, and their SARs should have been revised to provide it. As one example, the most recent mortality data in the Eastern North Pacific blue whale SAR is for 2008, but there is documentation of mortality to at least one blue whale in 2009. Importantly, this particular instance was in a NOAA-contracted research vessel, and the region lacks an Incidental Take Authorization for research-related mortality.

Response: The SARs for all strategic stocks (including stocks for which strategic status is due to listing under the ESA) are reviewed annually, as required. The inclusion of a relatively small change in estimated mortality or abundance would not change the status of these stocks nor provide for a more accurate assessment of their status. Although NMFS attempts to update SARs when information becomes available (whether the new information would change the status or not), some minor changes might not be incorporated into a SAR in any given year.

Comment 38: NMFS should update the false killer whale abundance estimate based on recent surveys as soon as possible.

Response: NMFS plans to update the false killer whale SAR to include a new abundance estimate from the 2011 survey as soon as the analyses are completed and have been peer-reviewed.

Comment 39: While the primary cause for the decline in Hawaiian monk seals is limited food availability, this assessment should include more information about the loss of pupping habitat due to sea level rise which will continue to threaten the monk seals. Additionally, Hawaiian monk seals on the Main Hawaiian Islands are increasingly injured by fishing hooks, and the use of barbless hooks could reduce serious injuries. There is newer information on the Main Hawaiian Islands population that should be incorporated into the stock assessment. A series of articles on Hawaiian monk seals was published in a special issue of Aquatic Mammals 37:1 (2011).

Response: Regarding sea level rise, the SAR notes this as a potential threat and cites the single research paper that analyzes this. There is no additional information to characterize the threat at this time, though additional analysis of climate impacts on the Northwest Hawaiian Islands is currently underway. Regarding hooking incidents within the Main Hawaiian Islands, the SAR contains updated information through 2008, the most recent when the SAR was drafted in 2010. The Main Hawaiian Island monk seal population is estimated to be growing robustly despite the unknown fisheries interaction rate. Therefore, while the absolute number of hookings appears to be growing, it is not possible to determine whether the rates of hooking, injury or mortality is changing significantly.

The noted Aquatic Mammals special issue was published after the 2011 SAR was drafted in 2010. The SAR is not meant to review all aspects of research and management of the species, but instead focuses on stock assessment issues prescribed to be addressed in the current Guidelines for Assessing Marine Mammal Stocks. Critical habitat revisions for Hawaiian monk seals would be covered at such time that a new critical habitat designation occurs.

Comment 40: The stock assessment for long-beaked common dolphin should be updated due to new information. At least three dolphins died as a result of an underwater blast during Navy training exercises. Two additional dolphins were found dead later, which may have been related to the exercise off the San Diego coast.

Response: A draft 2012 SAR for long-beaked common dolphin is currently in revision and will be released for public review in mid-2012. This SAR will include information on the blast trauma incident.

Comment 41: A number of stocks have abundance estimates that were becoming outdated (i.e., 8 or more years old) and yet were provided with PBRs (e.g., Spinner dolphins—Hawaiian Islands, Short-finned pilot whales—Hawaii stock). We see that the final SARs for these stocks that were not reviewed this year still retain this information even though population abundance estimates were based on a now-outdated 2002 survey. This is also true for some stocks in the current SARs. Where surveys are from 2002 or prior years, SARs should be corrected such that PBRs based on outdated information default to ''undetermined.''

Response: Draft 2013 SARs for all Hawaiian stocks will include new abundance information based on the 2010 survey. Those reports were not revised in 2011 because the status of those stocks with outdated abundance estimates will not change, i.e. changing the PBRs to ''undetermined'' would not change the status of those stock from ''not strategic'' to ''strategic.''

Comment 42: It would seem important for the region to speculate on possible reasons for the decline in harbor seal California stock counts between 2005 and 2009 (as illustrated in Figure 2). It is striking and begs explanation.

Response: A similar decline in counts was observed in 1993 (shown in Fig. 2 of the SAR), with subsequent year counts rebounding to levels previously observed in 1991 and 1992. Declines in any given year may result from inter-annual oceanographic variability, which can influence the amount of time animals spend foraging away from haulouts (e.g., during El Nino periods, animals may spend more time away from land, which would result in lower survey counts). The number of animals ashore may vary considerably depending on the time of day, weather, tidal phase, or prey availability (Harvey and Goley 2011). While surveys are conducted to coincide with low tides that are generally favorable for observing the maximum number of animals ashore, weather and other logistics do not always allow for surveys to be conducted at optimal times, contributing to the inter-annual variability in counts. NMFS is planning to conduct a harbor seal survey during 2012 and will re-evaluate trends when these data have been analyzed.

Comment 43: Although we recognize that the harbor seals—WA/OR stock and WA inland waters stock SAR was not reviewed or revised since 2010, we wish to point out that it states that tribal subsistence takes may be occurring. It should be noted that these takes are illegal in the absence of a waiver of the requirements of the MMPA.

Response: The SARs include all takes of marine mammals reported by Northwest Tribes. MMPA section 117(a) explicitly lists the information that should be included in the SARs. Section 117(a) requires identifying authorized and unauthorized take. Accordingly, such language is inappropriate for the SARs. The NOAA Office for Law Enforcement conducts investigations into complaints of potential violations of the MMPA involving all citizens within the jurisdiction of the United States.

Comment 44: According to information at the start of the Harbor Porpoise: Northern Oregon/Washington Coast SAR, it was prepared in April 2011. The most recent abundance survey is stated to be September 2002. This arguably exceeds the 8-year guideline for considering estimates to be outdated. Although most of the verbiage in the section on ''other mortality'' is not changed from the prior SAR, we are concerned that there is so little fishery-related mortality documented in the tables and discussion that precede that section. Despite this, the section states that in the 2006–2007 UME, where cause of death could be attributed, much of it was due to trauma and ''[s]uspected or confirmed fishery interactions were the primary cause of adult/subadult traumatic injuries.'' This might suggest that unobserved fisheries are having an impact that is not properly accounted.

Response: In both the Northern Oregon/Washington Coast and the Washington Inland Waters harbor porpoise SARs, the last sentence in the Population Size section states ''However, because the most recent abundance estimate is >8 years old, there is no current estimate of abundance available for this stock.''

The Alaska Fisheries Science Center and the Northwest Regional Office requested funding for both harbor seal and harbor porpoise surveys in 2011; however, these surveys were not funded in 2011. The Southwest Fisheries Science Center will analyze aerial surveys that have been conducted for leatherback sea turtles in 2010–2011 to determine whether there are sufficient harbor porpoise sightings to estimate

their abundance in waters off of Washington and Oregon. Recent vessel surveys may also be used to estimate the abundance of harbor porpoise in Washington inland waters.

Comment 45: In the harbor porpoise Washington Inland Waters SAR, we continue to be concerned that tribal gillnet fisheries are unobserved. Gillnet gear is implicated in harbor porpoise deaths wherever they co-occur, and the SAR indicates that there are even some limited self-reports of interactions with this stock. As the region acknowledged in a prior (1999) SAR for this same stock of harbor porpoise ''* * * because logbook records (fisher self-reports required during 1990–94) are most likely negatively biased (Credle *et al.,* 1994), these are considered to be minimum estimates.'' Perhaps a similar caveat should be re-inserted, and the region should make a concerted effort to work with tribes to try to better quantify interactions.

Response: NMFS continues to encourage tribal co-managers to obtain and provide information on interactions between tribal fishermen and marine mammals. At this time, self-reporting is the only source of information on bycatch of marine mammals in all Pacific Northwest salmon gillnet fisheries (non-treaty and treaty), and based on the analysis by Credle *et al.* (1994), self-reports represent minimum estimates.

Comment 46: In response to comments on the draft 2010 SARs regarding evidence of at least two populations of melon-headed whales in Hawaiian waters, NMFS stated that new information would be included in the 2011 SARs. However no updated report for melon-headed whales in Hawaiian waters is presented in the draft 2011 SARs.

Response: Melon-headed whales, with all other stocks in Hawaiian waters, will be updated in 2013. Non-strategic stocks are reviewed every three years, such that the next review and update will occur in 2013.

Comment 47: For the Hawaii Pelagic stock of false killer whale, the Status of Stock Section notes that ''no habitat issues are known to be of concern for this stock.'' However, two habitat issues identified in the draft SAR for the Hawaii Insular Stock, elevated levels of PCBs and declines in the biomass of some false killer whale prey species in Hawaiian waters also apply to this stock.

Response: There are no published reports that address polychlorinated biphenyl (PCB) levels in pelagic false killer whales, and it is inappropriate to assume that a pelagic population would be exposed to these pollutants at the same level as an island-associated stock that feeds closer to land-based pollution sources. We have added text to the SAR acknowledging the potential impacts of reductions in biomass of some prey species.

Comment 48: The NMFS delineation of Pacific false killer whale stocks is artificial and inaccurate.

Response: NMFS has previously responded to this and related comments (see 73 FR 21111, April 18, 2008, Comment 47; 74 FR 19530, April 29, 2009, Comment 34; 75 FR 100316, March 16, 2010, Comment 53; and 76 FR 34054, June 10, 2011, comment 52) and reiterates that the stock division for false killer whales is consistent with the MMPA and with NMFS 2005 Guidelines for Assessing Marine Mammal Stocks, which were finalized after opportunity for public review and comment, and provide guidance on abundance and PBR of transboundary stocks. Since the response to previous comments, the evidence for multiple stocks of false killer whales in the central North Pacific has only grown stronger (see Chivers *et al.,* 2010, referenced in the SAR). Further, as noted in Guidelines for Assessing Marine Mammal Stocks, the lack of genetic differences among false killer whale samples from the broader eastern North Pacific region does not imply that these animals are from a single Pacific stock.

Comment 49: NMFS's abundance estimate for the pelagic stock of false killer whales is inaccurate, arbitrary, and not based on the best available science.

Response: The abundance estimate for the pelagic stock of false killer whales was derived from peer-reviewed and well-established statistical methods for treating line-transect survey data. A new survey was recently completed, as referenced in the 2011 SAR, and the data from that survey are currently undergoing analysis. Using the new data, false killer whale abundance estimates will be revised for the 2012 SARs.

Comment 50: The draft false killer whale SAR determinations regarding the insular stock are inaccurate and arbitrary. Specifically, it inaccurately represents that the Insular Stock is ''declining;'' it wrongly assigns a deep-set fishery false killer whale interaction to the Insular Stock; and it improperly uses a recovery factor of 0.1 to calculate PBR for the Insular Stock.

Response: NMFS has previously responded to this and similar comments (see 75 FR 12505, March 16, 2010, comment 57; 76 FR 34054, June 10, 2011, comment 54) and reiterates the scientific information supporting the decline has been peer-reviewed and clearly outlines the data and basis for their conclusions. There is no attributed cause of this decline within the SAR, and fisheries have not been implicated at this time. The assignment of take within the insular-pelagic overlap zone is supported by the 2005 Guidelines for Assessing Marine Mammal Stocks. The recovery factor of 0.1 is also appropriate given the proposed listing and is supported by the Pacific SRG.

Comment 51: NMFS arbitrarily picks and chooses which information it will use to support the draft SAR.

Response: NMFS has previously responded to this comment (see 76 FR 34054, June 10, 2011, comment 56).

Comment 52: In the draft SAR, NMFS implements two new changes that result in the allocation of additional false killer whale interactions to the fisheries. NMFS assigns a proportion of false killer whale interactions for which no injury determination has been made and assigns a proportion of ''blackfish'' interactions as false killer whale interactions that also count against the fisheries. Neither of these changes in methodology is reasonable or lawful. In the first instance, NMFS proposes to categorize certain interactions as ''serious injuries'' when, in fact, no data exist from which NMFS is able to ascertain whether the specific interactions in question were serious or not. In the second instance, NMFS proposes to categorize certain interactions as false killer whale interactions when, in fact, no data exist from which NMFS can reliably determine that the interactions in question involved false killer whales. In both cases, interactions are unfairly counted against the fisheries in the absence of data.

Response: The NMFS 2005 Guidelines for Assessing Marine Mammal Stocks state ''* * * in some cases, mortality occurs in areas where more than one stock of marine mammals occurs. When biological information (e.g., genetics, morphology) is sufficient to identify the stock from which a dead animal came, then the mortality should be associated only with that stock. When a dead animal cannot be assigned directly to a stock, then mortality may be partitioned by the abundances of the stocks vulnerable to the mortality (i.e., based on the abundances of each stock within the appropriate geographic area), provided there is sufficient information on stock abundance. When mortality is partitioned among overlapping stocks proportional to the abundances of the affected stocks, the reports will contain a discussion of the potential for over or

under-estimating stock-specific mortality.'' Regarding allocation of serious injury/mortality of ''blackfish,'' these animals were identified as either false killer whales or pilot whales, and to exclude them from the reports would underestimate mortality. The prorating of unidentified animals was recommended and reviewed by the Pacific SRG in 2009 and 2010.

Comment 53: The Western Pacific Regional Fisheries Management Council notes an inconsistent application of the underlying assumptions in calculating PBR between the Hawaiian monk seal and Hawaii insular stock of false killer whale. The draft 2011 SAR reports that the population of Hawaii insular stock of false killer whales has exhibited a statistically significant decline in recent decades, and that model results indicate current declines at an average rate of 9% since 1989. It is not clear from the draft 2011 SAR why the Hawaiian insular stock of false killer whales fails to meet the underlying assumptions of the PBR calculation.

Response: The PBR framework was designed to maintain stocks as functioning elements of their ecosystem in the face of anthropogenic removals. If a stock is below its Optimum Sustainable Population and all anthropogenic factors have been removed, the population should presumably grow. If there are no fishery takes driving the population down (like monk seals in the Northwest Hawaiian Islands) and the population is still declining, then the stock dynamics are not conforming to the assumptions of PBR. Long-term and detailed demographic data are available for monk seals in the Northwest Hawaiian Islands, where most of the stock resides. These data provide unequivocal evidence that the population is declining in the Northwest Hawaiian Islands overall. Further, the current lack of any fisheries in the Northwest Hawaiian Islands means that direct fishery takes cannot be responsible for the decline. Other factors (prey limitation, entanglement in marine debris, shark predation and male seal aggression) are known contributors to the decline. The fact that Hawaiian monk seals are declining despite the lack of direct fishery takes in the Northwest Hawaiian Islands is the basis for the conclusion that the stock does not conform to PBR assumptions. The decline in Hawaiian insular false killer whales is not as well understood, and a cause cannot be absolutely attributed. As described in Oleson *et al.* (2010), it is highly likely that fishery interactions have impacted insular false killer whales, even if other environmental factors also impact that population. For this reason, application of PBR for this stock is appropriate.

Comment 54: The reported declining trend of the Hawaiian insular stock of false killer whales is inconsistent with NMFS' own best population estimate of the stock over the last decade. The abundance estimate of the insular population has, at minimum, remained stable since the 2000 SAR. At the time, an abundance estimate of 121 false killer whales was used based on calculations made in 2000 using aerial surveys conducted in 1993, 1995, and 1998 within approximately 25 nm of the Main Hawaiian Islands. The draft 2011 SAR estimates the current abundance at 170 false killer whales. The population, therefore, has not declined for at least 10 years and likely since the 1993 aerial survey, thus contradicting the population trend results derived in the Status Review of Hawaiian insular false killer whales.

Response: The draft 2011 SAR discusses the decline of insular false killer whales following the Biological Review conducted for this population under the ESA. The Biological Review Team agreed that the Mobley *et al.* (2000) abundance estimate of 121 individuals was negatively biased because observers were not able to detect groups below the plane and no adjustment was made for this or for animals that were submerged when the aircraft passed overhead in the calculation of abundance from those surveys, as is suggested in Buckland *et al.* (2001) ''Introduction to Distance Sampling.'' The 1993 to 1997 estimates also carry high uncertainty due to the unsurveyed 400 m wide strip underneath the plane. For these reasons, the Biological Review Team felt that the 1993 to 1997 estimate of 121 animals was unreliable and chose, instead, to use the encounter rate from each individual aerial survey in its assessment of population trend and extinction risk. The 1993 to 1997 aerial surveys may also be negatively biased due to the small average group size reported, suggesting that the aerial observers did not see the entire group. More recent analyses by Baird *et al.* (2008) have indicated that group size is positively related to encounter duration and that boat-based encounters less than two hours generally yield an underestimate of total group size. When circling small groups in an airplane, sub-groups on the periphery of the circled group can easily be missed, especially when observers are focused on obtaining group size estimates for the group being circled. For these reasons, it is inappropriate to directly compare the 2000 versus 2010 estimates of population size for false killer whales. The Population Viability Analysis conducted by the Biological Review Team assessed all data sources, including those available from the 1990s aerial surveys, and derived the 9% average decline in a statistically robust analysis.

Comment 55: The Western Pacific Regional Fisheries Management Council comments that NMFS continues to use an outdated minimum population estimate to calculate PBR for the Hawaii pelagic stock of false killer whales, despite compelling evidence from the recent Hawaiian Island Cetacean and Ecosystem. Assessment Survey (HICEAS) II survey in 2010 that the population is much greater than estimated using the old surveys. NMFS acknowledges that the 2010 survey had a six-fold increase in encounter rate than the 2002 survey, but makes no attempt to reflect the new survey results and simply ''retains'' the old minimum population estimate of 249 false killer whales. Preliminary analysis results of the 2010 survey, presented at the Pacific SRG meeting held November 7–9, 2011, estimated a higher minimum population estimate.

Response: The draft 2011 SAR is based on data and analyses that were available at the time it was drafted. The results presented at the November, 2011, SRG meeting were intended to provide a preliminary look at the analysis framework employed to derive estimates for the 2012 SARs. Final analyses of the HICEAS II survey data are not complete at this time. As a result, it is inappropriate to use interim results that NMFS and the SRG feel inadequately represent the uncertainty inherent in the data sets that underestimate uncertainty and overestimate the minimum abundance. The new estimates will be included in the 2012 draft SARs.

Comments on Alaska Regional Reports

Comment 56: The draft SAR incorrectly allocates a single interaction to different central North Pacific humpback whale sub-stocks.

Response: Where there is considerable uncertainty to which stock a serious injury or mortality should be assigned, NMFS exercises a conservative approach of assessing the potential impact of the serious injury or mortality to both stocks. If information were available regarding the location of take, genetics of the taken animal, or other conclusive information linking the serious injury or mortality to a specific stock, NMFS would use to assign the take to a specific stock.

Comment 57: The Commission recommends that NMFS consider the impending changes in the Arctic and develop a long-term assessment strategy that will provide a reliable basis for characterizing population abundance, stock status, and trends, as well as implementing protective measures that will minimize the effects of Arctic climate disruption on the viability of marine mammal stocks.

Response: NMFS understands that the viability of Arctic marine mammals in the context of a rapidly changing environment is a concern. NMFS will assess Arctic marine mammal abundance, trends, stock identification, foraging ecology, and vital rates, and how these features change in response to environmental and anthropogenic perturbations, as resources become available.

Comment 58: The Commission recommends that NMFS substantially increase its efforts to (1) collaborate with the Alaska Native community to monitor the abundance and distribution of ice seals and (2) use seals taken in the subsistence harvest to obtain data on demography, ecology, life history, behavior, health status, and other pertinent topics.

Response: NMFS works closely with co-management partners and Alaska Native communities to collect stock assessment data on ice seals. NMFS would like to improve its collection of data on subsistence harvest, which has been hindered by resource limitations. NMFS is aware that there are no current abundance estimates for any of the four species of ice-associated seals: ribbon, bearded, spotted, and ringed seals. These species range across the Bering and Chukchi Seas, and conducting surveys of these areas requires substantial resources. Joint US-Russia surveys are planned for spring 2012 and 2013 and are expected to result in abundance estimates for ribbon and spotted seals. Surveys directed at collecting abundance of ringed and bearded seals will be conducted as resources become available.

Comment 59: As the loss of ice in the Arctic progresses and industrial activities increase, increased ship traffic is expected through Unimak Pass and the Bering Strait. Shipping traffic transiting Unimak Pass on its way to and from the Bering Strait is likely to pass through the western portion of the critical habitat area designated in the southeast Bering Sea, putting right whales there at risk. The Commission recommends that NMFS do everything it can to ensure that all vessels operating in the area are aware of the need to protect the North Pacific right whale, and that every practicable step be taken to minimize the probability of entanglements and ship strikes.

Response: Several protective measures and outreach activities are already in place to protect the North Pacific right whale, including providing information cards to vessels operating in Alaska waters. NMFS will continue to work with partners such as Sea Grant, commercial fishers, Native communities, academia, and other recreational and commercial vessel operators on outreach activities.

Comment 60: The Commission recommends that NMFS continue its efforts to better describe the distribution and movement patterns of North Pacific right whales, especially with respect to their distribution during those periods when they are outside designated critical habitat.

Response: NMFS recognizes the importance of monitoring the population status and movement patterns of the eastern stock of North Pacific right whales and will continue to seek resources to study this critically endangered population.

Comment 61: The updating of ice seal SARs is welcome although we still have concerns regarding a lack of abundance data and recent or reliable estimates of Alaska Native harvest. Several SARs state that ''[a]s of 2009, data on community subsistence harvests are no longer being collected * * *.'' This warrants an explanation.

Response: NMFS recognizes the need for obtaining reliable estimates of subsistence harvests for all pinniped species in Alaska, including ice-dependent seal species. Due to funding limitations, the subsistence monitoring program conducted by Alaska Department of Fish and Game, which documents Steller sea lion and harbor seal subsistence hunts by village, is no longer supported by NMFS funds. Multi-year ice seal subsistence harvest studies have been started in specific communities by the Ice Seal Committee (six villages to date). This subsistence monitoring program will expand to other communities, with assistance from the Ice Seal Committee. Although some ice seal harvest data have been collected from specific villages, while other harvest data has been collected through tissue sampling programs and individual hunters, NMFS agrees that a full statewide subsistence monitoring program is necessary for ice seals, especially for any ESA-listed stocks.

Comment 62: Many fisheries with either a history of interactions or a high likelihood of interactions remain unobserved or inadequately observed. The region should prioritize funding for fishery observers for the many fisheries (largely gillnet fisheries) that may be interacting with species of concern (e.g., belugas, Pacific white sided dolphins, harbor porpoise, ice seals). The region should seek resources and advice on building a better system of deploying observers.

Response: NMFS is working with fishing industry and Alaska state partners on implementing adaptive sampling in the federal observer program that covers fisheries managed by the State of Alaska. The adaptive sampling methods are designed to increase data collection efficiency. NMFS has recently directed funds to observer effort in nearshore drift gillnet fisheries in southeast Alaska.

Comment 63: Habitat sections of many stock assessments discuss the potential for increased human activities as Arctic ice diminishes. The pressure for offshore exploration and extraction for oil and gas reserves continues as well. These activities that involve high intensity geophysical exploration and high levels of noise related to extraction (as well as increased vessel traffic) are not well addressed in the SARs.

Response: NMFS does address habitat concerns pertaining to oil and gas activities, particularly for those stocks where there is a potential concern. SARs for specific stocks have extensive information on potential habitat concerns depending on what information is available for a particular stock. NMFS will continue to update the habitat section for those stocks as new information becomes available.

Comment 64: Although Table 1 and text in the Steller sea lion Western stock SAR indicate a slow increase in numbers in the Gulf of Alaska, this is not evident for the Aleutians. The revised SAR discusses calculation of a PBR by adding language stating that ''some stocks of marine mammals in the U.S. with an obvious declining trend have been called 'undetermined,' '' but the region does not propose this approach for this stock. We understand that the stock is not declining throughout its range, but the justification for not calculating a PBR because a downward trend is not anthropogenic in origin is erroneous. Hawaiian monk seals are declining for reasons that are not primarily anthropogenic, but the Pacific region has taken a more precautionary approach. We suggest the same here.

Response: NMFS states that an ''undetermined'' PBR is not being proposed for the western Steller sea lion stock. A PBR of 253 animals has been calculated for this stock. Because direct human-related mortalities are at a low

level and are unlikely to either be responsible for the decline or to contribute substantially towards extinction risk, calling the PBR level ''undetermined'' is unnecessarily conservative for this population of over 40,000 animals.

Comment 65: The Steller sea lion Western stock SAR states that ''as of 2009, data on community subsistence harvests are no longer being collected.'' The PBR is calculated for the stock as 253 animals. The most recent data through 2008 indicate that the average harvest is 198. The addition of fishery-related mortality of 29 brings that estimate to 227. As such, the total anthropogenic mortalities to this stock are approaching—and may even exceed—the PBR.

Response: Previous responses (75 FR 12498, March 16, 2010, Comment 19; 76 FR 34054, June 10, 2011, Comment 11) have addressed comments pertaining to the need for current and accurate estimates of subsistence takes for pinnipeds in Alaska, including the western stock of Steller sea lions. The State of Alaska discontinued its collection of subsistence harvest information, and NMFS has insufficient resources to obtain up-to-date estimates of subsistence hunting of pinnipeds and will retain old information, with appropriate dates and caveats if necessary.

Comment 66: The section on ''other mortality'' in the Steller sea lion Eastern stock SAR does not mention the deaths of Steller sea lions in traps set in the Columbia River on the Oregon/Washington border. In 2008, two Steller sea lions from this Distinct Population Segment died in traps set in the Columbia River as part of a state lethal taking program aimed at California sea lions (NMFS 2011). These deaths should be included in the count provided in the SAR.

Response: NMFS appreciates the commenter bringing this oversight to our attention. NMFS has updated the final 2011 SARs and incorporated these events into mortality estimates for this stock.

Comment 67: The SAR for Beluga whales: Beaufort sea stock acknowledges that abundance data are too old to calculate a PBR, which remains ''undetermined.'' Yet the ''status of the stock'' section of the SAR says that ''the estimated annual level of human-caused mortality (126) is not known to exceed the PBR (324).'' This should be removed. PBR is undetermined.

Response: NMFS and the Alaska SRG agree, and the PBR level has been changed to ''undetermined'' for this stock.

Comment 68: The SAR for Beluga whales: Eastern Bering sea stock acknowledges that a PBR cannot be calculated yet states under status of the stock that ''the level of incidental mortality in commercial fisheries is considered to be insignificant.'' Without a PBR this statement cannot be made.

Response: NMFS appreciates the commenter bringing this error to their attention. This final 2011 SAR states that the estimated minimum annual mortality rate incidental to U.S. commercial fisheries is 0.0. The estimated overall human-caused mortality and serious injury is 193 based on subsistence harvest. The SAR has been modified as the commenter suggested.

Comment 69: The Beluga whale: Cook Inlet stock still faces risk with a calculated rate of decline that is approximately one percent per year. The section on Habitat acknowledges many development projects within their range. The section on ''Habitat Concerns'' should be expanded to include a general listing of the types of projects approved with more information on the impacts to the stock and its habitat and with appropriate concern regarding potential challenges to recovery.

Response: NMFS has previously responded to this and similar comments (75 FR 12498, March 16, 2010, Comment 1), and specifically to the ''habitat concerns'' section of the Cook Inlet beluga SAR (76 FR 34054, June 10, 2011, Comment 22).

Comment 70: There is a note in the 2009 SAR for the Southeast Alaska harbor porpoise stock that an abundance estimate was expected in 2010. The delay is lamentable and needs remedy. We continue to be concerned that observer coverage is lacking for so many gillnet fisheries in the range of the various harbor porpoise stocks in Alaska. The region needs to provide better observer coverage either aboard fishing vessels or from alternative platforms. Further, takes of porpoise in native subsistence nets in the Bering Sea in particular appear poorly documented. The region should update all stock abundance estimates on a priority basis and adopt a more robust observer program for state and federally managed gillnet fisheries.

Response: NMFS is working on developing a new survey design in order to obtain an abundance estimate for waters within Southeast Alaska. Previous survey data are being analyzed to examine trends for the areas that have been consistently surveyed over consecutive years. In order to fully understand trend results from this study, the survey area needs to be expanded to include a more comprehensive survey of harbor porpoise habitat. NMFS is focusing resources for harbor porpoise surveys in Southeast Alaska, where populations overlap with commercial fisheries and may incur incidental mortalities and serious injuries. An observer program will be implemented beginning in summer 2012 in the Southeast Alaska commercial salmon drift gillnet fishery that overlaps with the distribution of harbor porpoise.

In addition to the observer program being implemented beginning in 2012, the Alaska Region is seeking additional funding to broaden the observer program for gillnet and purse seine fisheries, as well as exploring alternative mitigation measures to reduce bycatch in fisheries known to take harbor porpoises. There are no requirements that harbor porpoise mortalities in subsistence nets be reported to NMFS, so these mortalities will continue to be documented to the extent possible.

Comment 71: The sperm whale SAR, and previous SARs for this endangered species, list the abundance, trend and PBR as ''unknown'' constantly. The NMFS should consider how best to remedy this situation.

Response: NMFS agrees that an abundance estimate, trend, and PBR are needed for sperm whales in Alaska and will continue to seek resources for necessary surveys.

Comment 72: Baird's beaked whale, Cuvier's beaked whale, and Stejneger's beaked whale stocks have unknown abundance estimates. While the potential impact from anthropogenic noise is acknowledged as a concern for this stock, we are concerned that the lack of understanding of its status will hamper the agency's ability to reliably assess or mitigate impacts from the increasing proposals for ocean energy development, much of which utilizes intense sound for geophysical exploration and construction for extraction.

Response: NMFS agrees that it is necessary to increase the understanding of the abundance, distribution and movements, demographic parameters, natural history, and ecology of beaked whale species in Alaska. With limited resources available, NMFS and external collaborators are considering alternative methods to best monitor and mitigate the potential effects of noise on these species.

Comment 73: No revisions have been made to the eastern North Pacific gray

whale stock definition and geographic range section, despite the availability of recent information that would seem to require updating. It is not clear that all anthropogenic mortalities to this stock have been accounted through 2009. While the section on habitat concerns recognizes the potential increase for oil and gas exploration and extraction, these proposal have been increasing rapidly.

Response: NMFS, with concurrence from the Alaska SRG, determined that not enough information was available to warrant any changes to the status of the stock section for the 2011 eastern North Pacific SAR. Updated mortality and serious injury data is included in the SAR from several sources, including the NMFS stranding network. Only records that are confirmed human interactions and injuries determined to be serious are reported in the SARs. NMFS has included information on the potential risk factors, including oil and gas exploration and extraction, and will continue to update the habitat concerns section as necessary.

Comment 74: We were disappointed to see the limited changes to the humpback whale SARs. Other than updated fishery-related mortality, there were virtually no changes. One change that should be made is mentioning the status review that the NMFS is undertaking for humpback whales worldwide, relative to their listing. Clearly fishery-related mortality and serious injury is underestimated. The SAR for Central North Pacific Humpbacks mentions vessel collisions in Alaska but pays little attention to collisions in the wintering area of Hawaii. There are reports of increasing collisions in Hawaii that do not appear to be simply an artifact of increased reporting or increasing humpback populations (Lammers *et al.,* 2007).

Response: Both Alaska humpback whale stocks are strategic stocks and reviewed annually. Both SARs underwent extensive changes in 2010, and very little new information has become available since that revision. NMFS conducts an extensive review of all humpback whale mortality and serious injury records from multiple sources for the two Alaska stocks each year. Serious injury determinations for these events are reported in the SARs, including reports of serious injury records from Hawaii. NMFS will report on any additional serious injuries for the two Alaska humpback whale stocks in the 2012 SARs.

Comment 75: Ice seals: The recent stock assessment reports appropriately discuss the impact of sea ice loss and carbon dioxide pollution on ringed, bearded, and spotted seals. They could benefit from additional information concerning these threats. NMFS should also prioritize studies to determine actual population size, trends, and PBR for these stocks. All of these stocks should be considered strategic. The ribbon seal assessment should also include the sea ice and carbon dioxide language and should be listed as strategic.

Response: MMPA section 117(3) contains directions for including risk factors in SARs, which includes summarizing effects on marine mammal habitat that may be causing a decline or impeding recovery for strategic stocks. NMFS does not consider it necessary to expand on these topics in the SAR at this time. NMFS agrees that it is necessary to increase the understanding of the distribution and movements, demographic parameters, natural history, and ecology of ringed, bearded, ribbon, and spotted seals in Alaska (see 75 FR 12498, March 16, 2010, Comment 5). At this time, none of these stocks qualify to be designated as strategic under the MMPA definition of a strategic stock. Arctic ringed seals and the Beringia DPS of bearded seals have been proposed for listing as threatened under the ESA primarily due to the risk posed by significant habitat loss projected within the foreseeable future (see 75 FR 77476, December 10, 2010; and 75 FR 7775 FR 77512, December 10, 2010). We have no current and reliable data to determine whether these stocks are declining. However, should these population units be listed as threatened, they will then qualify as strategic stocks.

Comment 76: The draft Harbor Seals Lake Iliamna SAR should consider designating the population of harbor seals in Lake Iliamna as a separate stock. Because there is no evidence of genetic interchange or breeding between Lake Iliamna harbor seals and the harbor seals of Bristol Bay, and because this is a unique freshwater population of harbor seals, with no other similar populations known to exist within the U.S., the population of seals in Lake Iliamna should be designated as a separate stock.

Response: NMFS and co-management partners in the Alaska Native community designated 12 stocks of harbor seals based on local knowledge, as well as historical and recent data. NMFS is in the process of evaluating the evidence for discreteness of the harbor seals in Lake Iliamna, including seasonal variation in numbers of seals in the lake, and their genetic makeup.

Comment 77: The sentence ''Laidre *et al.* (2008) concluded that on a worldwide basis belugas were likely to be less sensitive to climate change than other Arctic cetaceans because of their wide distribution and flexible behavior'' should be deleted. Indeed, the Convention on Migratory Species considers beluga whales to be threatened by climate change. A 2009 research paper found some beluga populations to be at high risk from climate change and others to be vulnerable (MacLeod 2009).

Response: A growing body of literature suggests that there will be species-specific responses to changes in Arctic climate, and that not all species will be negatively affected to the same degree. NMFS appreciates the commenter referencing this publication; however, the conclusions in MacLeod (2009) are speculative. NMFS has retained the statement referencing Laidre *et al.* (2008) and included a citation for Heide-Jørgensen *et al.* (2010), which gives further evidence that belugas seem to be able to respond well to large-scale habitat changes and may be less sensitive to climate change than other Arctic marine mammal species.

Comment 78: Cook Inlet beluga SAR still considers the small Yakutat population of belugas part of the Cook Inlet stock. As the proposed ESA-listing rule for the Cook Inlet stock notes, Yakutat belugas are genetically and geographically isolated from Cook Inlet belugas. Given their small population size, Yakutat belugas should be designated a separate stock and declared ''depleted.''

Response: As noted in previous responses (74 FR 19530, April 29, 2009, Comment 14; 75 FR 12498, March 16, 2010, Comment 8), NMFS regulations under the MMPA (50 CFR 216.15) include the beluga whales occupying Yakutat Bay as part of the Cook Inlet stock. Notice-and comment rulemaking procedures would be required to change this regulatory definition. Until such procedures are completed, these animals remain designated as depleted as part of the Cook Inlet stock.

Comment 79: All stock assessment reports for marine mammals that range in the outer continental shelf leasing areas should be updated to include threats from oil spills and associated oil and gas drilling activities, including seismic exploration activities.

Response: NMFS appreciates the commenter noting the specific habitat concerns that may be associated with the outer continental shelf leasing areas. NMFS updated the SARs as needed for those stocks in the outer continental shelf leasing area.

Dated: May 15, 2012.

Helen M. Golde,

Acting Director, Office of Protected Resources, National Marine Fisheries Service.

[FR Doc. 2012–12270 Filed 5–18–12; 8:45 am]

BILLING CODE 3510–22–P

DEPARTMENT OF COMMERCE

National Oceanic and Atmospheric Administration

RIN 0648–XC029

Fisheries of the Gulf of Mexico; Southeast Data, Assessment, and Review (SEDAR); Public Meetings

AGENCY: National Marine Fisheries Service (NMFS), National Oceanic and Atmospheric Administration (NOAA), Commerce.

ACTION: Notice of SEDAR Workshops for Gulf of Mexico red snapper *Lutjanus campechanus.*

SUMMARY: The SEDAR assessment of the Gulf of Mexico stock of red snapper will consist of a series of three workshops: a Data Workshop, an Assessment Workshop, and a Review Workshop. This series of workshops will be referred to as SEDAR 31. See **SUPPLEMENTARY INFORMATION.**

DATES: The Data Workshop will take place August 20–24, 2012; the Assessment Workshop will take place January 28–February 1, 2013; the Review Workshop will take place April 29–May 3, 2013. See **SUPPLEMENTARY INFORMATION** for specific dates and times.

ADDRESSES: The Data Workshop will be held at the Crowne Plaza Pensacola Grande, 200 E. Gregory St., Pensacola, FL 32502; telephone: (850) 433–3336. The Assessment Workshop will be held at the Courtyard by Marriott Miami Coconut Grove, 2649 South Bayshore Dr., Miami, FL 33133; telephone: (305) 858–2500. The Review Workshop will be held at the Courtyard by Marriott Gulfport Beachfront, 1600 East Beach Blvd., Gulfport, MS 39501; telephone: (228) 864–4310.

FOR FURTHER INFORMATION CONTACT: Ryan Rindone, SEDAR Coordinator, 2203 North Lois Ave, Suite 1100, Tampa, FL 33607; telephone: (813) 348–1630; *email: ryan.rindone@gulfcouncil.org.*

SUPPLEMENTARY INFORMATION: The Gulf of Mexico, South Atlantic, and Caribbean Fishery Management Councils, in conjunction with NOAA Fisheries and the Atlantic and Gulf States Marine Fisheries Commissions have implemented the Southeast Data, Assessment and Review (SEDAR) process, a multi-step method for determining the status of fish stocks in the Southeast Region. SEDAR includes three workshops: (1) Data Workshop, (2) Stock Assessment Workshop and (3) Review Workshop. The product of the Data Workshop is a data report which compiles and evaluates potential datasets and recommends which datasets are appropriate for assessment analyses. The product of the Stock Assessment Workshop is a stock assessment report which describes the fisheries, evaluates the status of the stock, estimates biological benchmarks, projects future population conditions, and recommends research and monitoring needs. The assessment is independently peer reviewed at the Review Workshop. The product of the Review Workshop is a Summary documenting Panel opinions regarding the strengths and weaknesses of the stock assessment and input data. Participants for SEDAR Workshops are appointed by the Gulf of Mexico, South Atlantic, and Caribbean Fishery Management Councils and NOAA Fisheries Southeast Regional Office and Southeast Fisheries Science Center. Participants include data collectors and database managers; stock assessment scientists, biologists, and researchers; constituency representatives including fishermen, environmentalists, and NGO's; International experts; and staff of Councils, Commissions, and state and federal agencies.

SEDAR 31 Workshop Schedule

August 20–24, 2012; SEDAR 31 Data Workshop

August 20, 2012: 1 p.m.–8 p.m.; August 21–23, 2012: 8 a.m.–8 p.m.; August 24, 2012: 8 a.m.–12 p.m.

An assessment data set and associated documentation will be developed during the Data Workshop. Participants will evaluate all available data and select appropriate sources for providing information on life history characteristics, catch statistics, discard estimates, length and age composition, and fishery dependent and fishery independent measures of stock abundance.

January 28–February 1, 2013; SEDAR 31 Assessment Workshop

January 28, 2013: 1 p.m.–8 p.m.; January 29–31, 2013: 8 a.m.–8 p.m.; February 1, 2013: 8 a.m.–12 p.m.

Using datasets provided by the Data Workshop, participants will develop population models to evaluate stock status, estimate population benchmarks and Magnuson-Stevens Reauthorization Act criteria, and project future conditions. Participants will recommend the most appropriate methods and configurations for determining stock status and estimating population parameters. Participants will prepare a workshop report, compare and contrast various assessment approaches, and determine whether the assessments are adequate for submission to the review panel.

April 29–May 3, 2013; SEDAR 31 Review Workshop

April 29, 2013: 1 p.m.–8 p.m.; April 30–May 2, 2013: 8 a.m.–8 p.m.; May 3, 2013: 8 a.m.–12 p.m.

The Review Workshop is an independent peer review of the assessment developed during the Data and Assessment Workshops. Workshop Panelists will review the assessment and document their comments and recommendations in a Review Panel Summary.

Although non-emergency issues not contained in this agenda may come before these groups for discussion, those issues may not be the subject of formal action during these meetings. Action will be restricted to those issues specifically listed in this notice and any issues arising after publication of this notice that require emergency action under section 305(c) of the Magnuson-Stevens Fishery Conservation and Management Act, provided the public has been notified of the Council's intent to take final action to address the emergency.

Special Accommodations

These meetings are physically accessible to people with disabilities. Requests for sign language interpretation or other auxiliary aids should be directed to the Gulf of Mexico Fishery Management Council office (see **FOR FURTHER INFORMATION CONTACT**) at least 10 business days prior to each workshop.

Dated: May 16, 2012.

Tracey L. Thompson,

Acting Director, Office of Sustainable Fisheries, National Marine Fisheries Service.

[FR Doc. 2012–12204 Filed 5–18–12; 8:45 am]

BILLING CODE 3510–22–P

DEPARTMENT OF COMMERCE

National Oceanic and Atmospheric Administration

RIN 0648–XB005

Marine Mammals; File No. 17086

AGENCY: National Marine Fisheries Service (NMFS), National Oceanic and

Atmospheric Administration (NOAA), Commerce.

ACTION: Notice; issuance of permit.

SUMMARY: Notice is hereby given that a permit has been issued to Robin Baird, Ph.D., Cascadia Research, 218½ W. 4th Avenue, Olympia, WA 98501, to conduct research on marine mammals in the Atlantic Ocean.

ADDRESSES: The permit and related documents are available for review upon written request or by appointment in the following offices:

Permits and Conservation Division, Office of Protected Resources, NMFS, 1315 East-West Highway, Room 13705, Silver Spring, MD 20910; phone (301) 427–8401; fax (301) 713–0376;

Northeast Region, NMFS, 55 Great Republic Drive, Gloucester, MA 01930; phone (978) 281–9328; fax (978) 281–9394; and

Southeast Region, NMFS, 263 13th Avenue South, Saint Petersburg, FL 33701; phone (727) 824–5312; fax (727) 824–5309.

FOR FURTHER INFORMATION CONTACT: Laura Morse or Carrie Hubard, (301) 427–8401.

SUPPLEMENTARY INFORMATION: On February 17, 2012, notice was published in the **Federal Register** (77 FR 9627) that a request for a permit to conduct research on 27 species of cetaceans in U.S. and international waters of the Atlantic Ocean from Virginia to Southern Florida had been submitted by the above-named applicant. The requested permit has been issued under the authority of the Marine Mammal Protection Act of 1972, as amended (16 U.S.C. 1361 *et seq.*) and the regulations governing the taking and importing of marine mammals (50 CFR part 216).

Authorized taking includes harassment of 27 species of cetaceans through vessel approach for sighting surveys, photographic identification, behavioral research, opportunistic sampling (sloughed skin, fecal material, and prey remains), and dart and/or suction-cup tagging. Import and export of marine mammal prey specimens, sloughed skin, fecal, and breath samples obtained is authorized. The permit is valid until May 11, 2017.

In compliance with the National Environmental Policy Act of 1969 (42 U.S.C. 4321 *et seq.*), a final determination has been made that the activity proposed is categorically excluded from the requirement to prepare an environmental assessment or environmental impact statement.

Dated: May 15, 2012.

Tammy C. Adams,

Acting Chief, Permits and Conservation Division, Office of Protected Resources, National Marine Fisheries Service.

[FR Doc. 2012–12267 Filed 5–18–12; 8:45 am]

BILLING CODE 3510–22–P

DEPARTMENT OF DEFENSE

GENERAL SERVICES ADMINISTRATION

NATIONAL AERONAUTICS AND SPACE ADMINISTRATION

[OMB Control No. 9000–0154; Docket 2012–0076; Sequence 11]

Federal Acquisition Regulation; Submission for OMB Review; Davis Bacon Act-Price Adjustment (Actual Method)

AGENCY: Department of Defense (DOD), General Services Administration (GSA), and National Aeronautics and Space Administration (NASA).

ACTION: Notice of request for public comments regarding an extension to an existing OMB clearance.

SUMMARY: Under the provisions of the Paperwork Reduction Act, the Regulatory Secretariat will be submitting to the Office of Management and Budget (OMB) a request to review and approve an extension of a previously approved information collection requirement concerning the Davis-Bacon Act price adjustment (actual method). A notice was published in the **Federal Register** at 77 FR 13328, on March 6, 2012. No comments were received.

Public comments are particularly invited on: Whether this collection of information is necessary for the proper performance of functions of the federal Acquisition Regulations (FAR), and whether it will have practical utility; whether our estimate of the public burden of this collection of information is accurate, and based on valid assumptions and methodology; ways to enhance the quality, utility, and clarity of the information to be collected; and ways in which we can minimize the burden of the collection of information on those who are to respond, through the use of appropriate technological collection techniques or other forms of information technology.

DATES: Submit comments on or before June 20, 2012.

ADDRESSES: Submit comments identified by Information Collection 9000–0154, Davis Bacon Act-Price Adjustment (Actual Method), by any of the following methods:

- *Regulations.gov: http://www.regulations.gov.* Submit comments via the Federal eRulemaking portal by searching the OMB control number. Select the link ''Submit a Comment'' that corresponds with ''Information Collection 9000–0154, Davis Bacon Act-Price Adjustment (Actual Method)''. Follow the instructions provided at the ''Submit a Comment'' screen. Please include your name, company name (if any), and ''Information Collection 9000–0154, Davis Bacon Act-Price Adjustment (Actual Method)'' on your attached document.
- *Fax:* 202–501–4067.
- *Mail:* General Services Administration, Regulatory Secretariat (MVCB), 1275 First Street NE., Washington, DC 20417. ATTN: Hada Flowers/IC 9000–0154, Davis Bacon Act-Price Adjustment (Actual Method).

Instructions: Please submit comments only and cite Information Collection 9000–0154, Davis Bacon Act-Price Adjustment (Actual Method), in all correspondence related to this collection. All comments received will be posted without change to *http://www.regulations.gov,* including any personal and/or business confidential information provided.

FOR FURTHER INFORMATION CONTACT: Mr. Edward Loeb, Procurement Analyst, Federal Acquisition Policy Division, GSA, (202) 501–0650, or via email *Edward.loeb@gsa.gov.*

SUPPLEMENTARY INFORMATION:

A. Purpose

Government contracting officers may include FAR clause 52.222–32, Davis-Bacon Act—Price Adjustment (Actual Method) in fixed-price solicitations and contracts, subject to the Davis-Bacon Act under certain conditions. The conditions are that the solicitation or contract contains option provisions to extend the term of the contract and the contracting officer determines that the most appropriate method to adjust the contract price at option exercise is to use a computation method based on the actual increase or decrease from a new or revised Department of Labor Davis-Bacon Act wage determination.

The clause requires that a contractor submit at the exercise of each option to extend the term of the contract, a statement of the amount claimed for incorporation of the most current wage determination by the Department of Labor, and any relevant supporting data, including payroll records that the contracting officer may reasonably require. The information is used by

Government contracting officers to establish the contract price adjustment for the construction requirements of a contract, generally if the contract requirements are predominantly services subject to the Service Contract Act.

B. Annual Reporting Burden

Respondents: 842.
Responses per Respondent: 1.
Annual Responses: 842.
Hours per Response: 40.
Total Burden Hours: 33,680.
Obtaining Copies of Proposals: Requesters may obtain a copy of the information collection documents from the General Services Administration, Regulatory Secretariat (MVCB), 1275 First Street NE., Washington, DC 20417, telephone (202) 501–4755. Please cite OMB Control No. 9000–0154, Davis-Bacon Act—Price Adjustment (Actual Method), in all correspondence.

Dated: May 15, 2012.

Laura Auletta,

Director, Office of Governmentwide Acquisition Policy, Office of Acquisition Policy, Office of Governmentwide Policy.

[FR Doc. 2012–12205 Filed 5–18–12; 8:45 am]

BILLING CODE 6820–EP–P

DEPARTMENT OF DEFENSE

GENERAL SERVICES ADMINISTRATION

NATIONAL AERONAUTICS AND SPACE ADMINISTRATION

[OMB Control No. 9000–0149; Docket 2012–0076; Sequence 15]

Federal Acquisition Regulation; Information Collection; Subcontract Consent

AGENCY: Department of Defense (DOD), General Services Administration (GSA), and National Aeronautics and Space Administration (NASA).

ACTION: Notice of request for public comments regarding an extension to an existing OMB clearance (9000–0149).

SUMMARY: Under the provisions of the Paperwork Reduction Act, the Regulatory Secretariat will be submitting to the Office of Management and Budget (OMB) a request to review and approve an extension of a previously approved information collection requirement concerning subcontract consent. This OMB Clearance expires August 31, 2012.

Public comments are particularly invited on: Whether this collection of information is necessary for the proper performance of functions of the Federal Acquisition Regulation (FAR), and whether it will have practical utility; whether our estimate of the public burden of this collection of information is accurate, and based on valid assumptions and methodology; ways to enhance the quality, utility, and clarity of the information to be collected; and ways in which we can minimize the burden of the collection of information on those who are to respond, through the use of appropriate technological collection techniques or other forms of information technology.

DATES: Submit comments on or before July 20, 2012.

ADDRESSES: Submit comments identified by Information Collection 9000–0149, Subcontract Consent, by any of the following methods:

- *Regulations.gov: http://www.regulations.gov.* Submit comments via the Federal eRulemaking portal by searching the OMB control number. Select the link ''Submit a Comment'' that corresponds with ''Information Collection 9000–0149, Subcontract Consent''. Follow the instructions provided at the ''Submit a Comment'' screen. Please include your name, company name (if any), and ''Information Collection 9000–0149, Subcontract Consent'' on your attached document.
- *Fax:* 202–501–4067.
- *Mail:* General Services Administration, Regulatory Secretariat (MVCB), 1275 First Street NE., Washington, DC 20417. ATTN: Hada Flowers/IC 9000–0149, Subcontract Consent.

Instructions: Please submit comments only and cite Information Collection 9000–0149, Subcontract Consent, in all correspondence related to this collection. All comments received will be posted without change to *http://www.regulations.gov,* including any personal and/or business confidential information provided.

FOR FURTHER INFORMATION CONTACT: Mr. Karlos Morgan, Procurement Analyst, Contract Policy Division, GSA, (202) 501–2364 or via email at *karlos.morgan@gsa.gov.*

SUPPLEMENTARY INFORMATION:

A. Purpose

The objective of consent to subcontract, as discussed in FAR Part 44, is to evaluate the efficiency and effectiveness with which the contractor spends Government funds, and complies with Government policy when subcontracting. The Government requires a contractor to provide certain information (e.g., subcontractor's name, type of subcontract, price, description of supply or services, etc.) reasonably in advance of placing a subcontract to ensure that the proposed subcontract is appropriate for the risks involved and consistent with current policy and sound business judgment. The information provides the Government a basis for granting, or withholding consent to subcontract.

B. Annual Reporting Burden

Number of Respondents: 4,252.
Responses per Respondent: 3.61.
Total Responses: 15,349.
Average Burden Hours per Response: .87.
Total Burden Hours: 13,353.
Obtaining Copies of Proposals: Requesters may obtain a copy of the information collection documents from the General Services Administration, Regulatory Secretariat (MVCB), 1275 First Street NE., Washington, DC 20417, telephone (202) 501–4755. Please cite OMB Control No. 9000–0149, Subcontract Consent, in all correspondence.

Laura Auletta,

Director, Office of Governmentwide Acquisition Policy, Office of Acquisition Policy, Office of Governmentwide Policy.

[FR Doc. 2012–12207 Filed 5–18–12; 8:45 am]

BILLING CODE 6820–EP–P

DEPARTMENT OF DEFENSE

GENERAL SERVICES ADMINISTRATION

NATIONAL AERONAUTICS AND SPACE ADMINISTRATION

[OMB Control No. 9000–0076; Docket 2012–0076; Sequence 12]

Federal Acquisition Regulation; Information Collection; Novation/Change of Name Requirements

AGENCY: Department of Defense (DOD), General Services Administration (GSA), and National Aeronautics and Space Administration (NASA).

ACTION: Notice of request for comments regarding an extension to an existing OMB clearance.

SUMMARY: Under the provisions of the Paperwork Reduction Act, the Regulatory Secretariat will be submitting to the Office of Management and Budget (OMB) a request to review and approve an extension of a previously approved information collection requirement concerning Novation/Change of Name Requirements.

Public comments are particularly invited on: Whether this collection of

information is necessary; whether it will have practical utility; whether our estimate of the public burden of this collection of information is accurate, and based on valid assumptions and methodology; ways to enhance the quality, utility, and clarity of the information to be collected; and ways in which we can minimize the burden of the collection of information on those who are to respond, through the use of appropriate technological collection techniques or other forms of information technology.

DATES: Submit comments on or before July 20, 2012.

ADDRESSES: Submit comments identified by Information Collection 9000–0076, Novation/Change of Name Requirements, by any of the following methods:

- *Regulations.gov: http://www.regulations.gov.* Submit comments via the Federal eRulemaking portal by searching the OMB control number. Select the link ''Submit a Comment'' that corresponds with ''Information Collection 9000–0076, Novation/Change of Name Requirements''. Follow the instructions provided at the ''Submit a Comment'' screen. Please include your name, company name (if any), and ''Information Collection 9000–0076, Novation/Change of Name Requirements'' on your attached document.
- *Fax:* 202–501–4067.
- *Mail:* General Services Administration, Regulatory Secretariat (MVCB), 1275 First Street, NE., Washington, DC 20417. Attn: Hada Flowers/IC 9000–0076, Novation/Change of Name Requirements.

Instructions: Please submit comments only and cite Information Collection 9000–0076, Novation/Change of Name Requirements, in all correspondence related to this collection. All comments received will be posted without change to *http://www.regulations.gov,* including any personal and/or business confidential information provided.

FOR FURTHER INFORMATION CONTACT: Mr. Curtis E. Glover, Sr., Procurement Analyst, Office of Governmentwide Acquisition Policy, GSA, (202) 208–4949 or via email *Curtis.glover@gsa.gov.*

A. Purpose

FAR 42.1203 and 42.1204 provide requirements for contractors to request novation/change of name agreements and supporting documents when a firm performing under Government contracts wishes the Government to recognize (1) a successor in interest to these contracts, or (2) a name change, it must submit certain documentation to the Government.

B. Annual Reporting Burden

Respondents: 1,000.
Responses Per Respondent: 1.
Annual Responses: 1,000.
Hours Per Response: 2.0.
Total Burden Hours: 2,000.
Obtaining Copies of Proposals: Requesters may obtain a copy of the information collection documents from the General Services Administration, Regulatory Secretariat (MVCB), 1275 First Street, NE., Washington, DC 20417, telephone (202) 501–4755. Please cite OMB Control No. 9000–0076, Novation/Change of Name Requirements, in all correspondence.

Dated: May 15, 2012.

Laura Auletta,

Director, Office of Governmentwide Acquisition Policy, Office of Acquisition Policy, Office of Governmentwide Policy.

[FR Doc. 2012–12211 Filed 5–18–12; 8:45 am]

BILLING CODE 6820–EP–P

DEPARTMENT OF DEFENSE

GENERAL SERVICES ADMINISTRATION

NATIONAL AERONAUTICS AND SPACE ADMINISTRATION

[OMB Control No. 9000–0054; Docket 2012–0076; Sequence 3]

Federal Acquisition Regulation; Submission for OMB Review; U.S.-Flag Air Carriers Statement

AGENCY: Department of Defense (DOD), General Services Administration (GSA), and National Aeronautics and Space Administration (NASA).

ACTION: Notice of request for public comments regarding an extension to an existing OMB clearance.

SUMMARY: Under the provisions of the Paperwork Reduction Act, the Regulatory Secretariat will be submitting to the Office of Management and Budget (OMB) a request to review and approve a previously approved information collection requirement concerning U.S. Flag Air Carriers Certification. A notice was published in the **Federal Register** at 77 FR 14354, on March 9, 2012. No comments were received.

Public comments are particularly invited on: Whether this collection of information is necessary for the proper performance of functions of the Federal Acquisition Regulations (FAR), and whether it will have practical utility; whether our estimate of the public burden of this collection of information is accurate, and based on valid assumptions and methodology; ways to enhance the quality, utility, and clarity of the information to be collected; and ways in which we can minimize the burden of the collection of information on those who are to respond, through the use of appropriate technological collection techniques or other forms of information technology.

DATES: Submit comments on or before June 20, 2012.

ADDRESSES: Submit comments identified by Information Collection 9000–0054, U.S. Flag Carriers Certification by any of the following methods:

- *Regulations.gov: http://www.regulations.gov.*

Submit comments via the Federal eRulemaking portal by searching the OMB control number. Select the link ''Submit a Comment'' that corresponds with ''Information Collection 9000–0054, U.S. Flag Carriers Certification''. Follow the instructions provided at the ''Submit a Comment'' screen. Please include your name, company name (if any), and ''Information Collection 9000–0054, U.S. Flag Carriers Certification'' on your attached document.

- *Fax:* 202–501–4067.
- *Mail:* General Services Administration, Regulatory Secretariat (MVCB), 1275 First Street NE., Washington, DC 20417. ATTN: Hada Flowers/IC 9000–0054, U.S. Flag Carriers Certification.

Instructions: Please submit comments only and cite Information Collection 9000–0054, U.S. Flag Carriers Certification, in all correspondence related to this collection. All comments received will be posted without change to *http://www.regulations.gov,* including any personal and/or business confidential information provided.

FOR FURTHER INFORMATION CONTACT: Mr. Curtis E. Glover, Sr., Procurement Analyst, Contract Policy Division, GSA (202) 501–1448 or via email at *Curtis.glover@gsa.gov.*

SUPPLEMENTARY INFORMATION:

A. Purpose

Section 5 of the International Air transportation Fair Competitive Practices Act of 1974 (49 U.S.C. 1517) (Fly America Act, implemented FAR 47.4, which requires that all Federal agencies and Government contractors and subcontractors use U.S.-flag air carriers for U.S. Government-financed international air transportation of personnel (and their personal effects) or property, to the extent that service by those carriers is available. It requires the

Comptroller General of the United States, in the absence of satisfactory proof of the necessity for foreign-flag air transportation, to disallow expenditures from funds, appropriated or otherwise established for the account of the United States, for international air transportation secured aboard a foreign-flag air carrier if a U.S.-flag carrier is available to provide such services. In the event that the contractor selects a carrier other than a U.S.-flag air carrier for international air transportation, the contractor shall include per FAR clause 52.247–64, Preference for U.S.-Flag Air Carriers, a statement on vouchers involving such transportation. The contracting officer uses the information furnished in the statement to determine whether adequate justification exists for the contractor's use of other than U.S.-flag air carrier.

B. Annual Reporting Burden

Respondents: 150.
Responses per Respondent: 2.
Annual Responses: 300.
Hours per Response: .25.
Total Burden Hours: 75.
Obtaining Copies of Proposals: Requesters may obtain a copy of the information collection documents from the General Services Administration, Regulatory Secretariat (MVCB), 1275 First Street NE., Washington, DC 20417, telephone (202) 501–4755. Please cite OMB Control No. 9000–0054, Submission for OMB Review; U.S.-Flag Air Carriers Certification, in all correspondence.

Dated: May 15, 2012.

Laura Auletta,

Director, Office of Governmentwide Acquisition Policy, Office of Acquisition Policy, Office of Governmentwide Policy.

[FR Doc. 2012–12210 Filed 5–18–12; 8:45 am]

BILLING CODE 6820–EP–P

DEPARTMENT OF DEFENSE

Office of the Secretary

Renewal of Department of Defense Federal Advisory Committees

AGENCY: DoD.

ACTION: Renewal of Federal Advisory Committee.

SUMMARY: Under the provisions of 10 U.S.C. 1074g(c), the Federal Advisory Committee Act of 1972 (5 U.S.C. Appendix), the Government in the Sunshine Act of 1976 (5 U.S.C. 552b), and 41 CFR 102–3.50(a), the Department of Defense gives notice that it is renewing the charter for the Uniform Formulary Beneficiary Advisory Panel (hereafter referred to as ''the Panel'').

The Panel is a non-discretionary federal advisory committee that shall provide the Secretary of Defense through the Under Secretary of Defense for Personnel and Readiness, the Assistant Secretary of Defense for Health Affairs, and the Director, TRICARE Management Activity, independent advice and recommendations on development of the uniform formulary. The Secretary of Defense shall consider the comments of the Panel before implementing the uniform formulary or implementing changes to the uniform formulary.

The Panel shall report to the Secretary of Defense through the Under Secretary of Defense for Personnel and Readiness, the Assistant Secretary of Defense for Health Affairs, and the Director, TRICARE Management Activity. The Under Secretary of Defense for Personnel and Readiness or designated representative, may act upon the Panel's advice and recommendations. The Panel, pursuant to 10 U.S.C. 1074g(c)(2), shall be comprised of no more than 15 members. The Panel shall include members that represent:

a. Non-governmental organizations and associations that represent the views and interests of a large number of eligible covered beneficiaries;

b. Contractors responsible for the TRICARE retail pharmacy program;

c. Contractors responsible for the national mail-order pharmacy program; and

d. TRICARE network providers.

Panel members, who are not full-time or permanent part-time Federal officers or employees, shall be appointed to serve as experts and consultants under the authority of 5 U.S.C. 3109 and shall serve as special government employees. All Panel members shall be appointed by the Secretary of Defense and their appointments shall be renewed on an annual basis.

The Panel membership shall select the Panel's Chairperson from the total membership. With the exception of travel and per diem for official Panel related travel, Panel members shall serve without compensation.

The Secretary of Defense may approve the appointment of Panel members for one to four year terms of service; however, no member, unless authorized by the Secretary of Defense, may serve more than two consecutive terms of service. This same term of service limitation also applies to any DoD authorized subcommittees.

Each Panel member is appointed to provide advice on behalf of the government on the basis of his or her best judgment without representing any particular point of view and in a manner that is free from conflict of interest.

The Department, when necessary, and consistent with the Panel's mission and DoD policies and procedures, may establish subcommittees to support the Panel. Establishment of subcommittees will be based upon a written determination, to include terms of reference, by the Secretary of Defense, the Deputy Secretary of Defense or the Panel's sponsor.

Such subcommittees shall not work independently of the chartered Panel, and shall report all their recommendations and advice to the Panel for full deliberation and discussion. Subcommittees have no authority to make decisions on behalf of the chartered Panel; nor can any subcommittee or its members update or report directly to the DoD or any Federal officers or employees.

All subcommittee members shall be appointed in the same manner as the Panel members; that is, the Secretary of Defense shall appoint subcommittee members even if the member in question is already a Panel member. Subcommittee members, with the approval of the Secretary of Defense, may serve a term of service on the subcommittee of one to four years.

Subcommittee members, if not full-time or part-time government employees, shall be appointed to serve as experts and consultants under the authority of 5 U.S.C. 3109, and shall serve as special government employees, whose appointments must be renewed by the Secretary of Defense on an annual basis. With the exception of travel and per diem for official Panel related travel, subcommittee members shall serve without compensation.

All subcommittees operate under the provisions of FACA, the Government in the Sunshine Act, governing Federal statutes and regulations, and governing DoD policies/procedures.

FOR FURTHER INFORMATION CONTACT: Jim Freeman, Advisory Committee Management Officer for the Department of Defense, 703–692–5952.

SUPPLEMENTARY INFORMATION: The Panel shall meet at the call of the Panel's Designated Federal Officer, in consultation with the Panel's Chairperson. The estimated number of Panel meetings is four per year.

In addition, the Designated Federal Officer is required to be in attendance at all Panel and subcommittee meetings for the entire duration of each and every meeting; however, in the absence of the Designated Federal Officer, a properly approved Alternate Designated Federal Officer shall attend the entire duration of the Panel or subcommittee meeting.

The Designated Federal Officer, or the Alternate Designated Federal Officer, shall call all of the Panel's and subcommittees' meetings; prepare and approve all meeting agendas; adjourn any meeting when the Designated Federal Officer, or the Alternate Designated Federal Officer, determines adjournment to be in the public interest or required by governing regulations or DoD policies/procedures; and chair meetings when directed to do so by the official to whom the Panel reports.

Pursuant to 41 CFR 102–3.105(j) and 102–3.140, the public or interested organizations may submit written statements to Uniform Formulary Beneficiary Advisory Panel membership about the Panel's mission and functions. Written statements may be submitted at any time or in response to the stated agenda of planned meeting of Uniform Formulary Beneficiary Advisory Panel.

All written statements shall be submitted to the Designated Federal Officer for the Uniform Formulary Beneficiary Advisory Panel, and this individual will ensure that the written statements are provided to the membership for their consideration. Contact information for the Uniform Formulary Beneficiary Advisory Panel's Designated Federal Officer can be obtained from the GSA's FACA Database—*https://www.fido.gov/facadatabase/public.asp*.

The Designated Federal Officer, pursuant to 41 CFR 102–3.150, will announce planned meetings of the Uniform Formulary Beneficiary Advisory Panel. The Designated Federal Officer, at that time, may provide additional guidance on the submission of written statements that are in response to the stated agenda for the planned meeting in question.

Dated: May 15, 2012.

Aaron Siegel,

Alternate OSD Federal Register Liaison Officer, Department of Defense.

[FR Doc. 2012–12145 Filed 5–18–12; 8:45 am]

BILLING CODE 5001–06–P

DEFENSE NUCLEAR FACILITIES SAFETY BOARD

[Recommendation 2012–1]

Savannah River Site Building 235–F Safety

AGENCY: Defense Nuclear Facilities Safety Board.

ACTION: Notice, recommendation.

SUMMARY: Pursuant to the Atomic Energy Act of 1954, as Amended, the Defense Nuclear Facilities Safety Board has made a recommendation to the Secretary of Energy concerning safety at the Savannah River Site Building 235–F.

DATES: Comments, data, views, or arguments concerning the recommendation are due on or before June 20, 2012.

ADDRESSES: Send comments concerning this notice to: Defense Nuclear Facilities Safety Board, 625 Indiana Avenue NW., Suite 700, Washington, DC 20004–2001.

FOR FURTHER INFORMATION CONTACT: Brian Grosner or Andrew L. Thibadeau at the address above or telephone number (202) 694–7000.

Dated: May 15, 2012.

Peter S. Winokur,

Chairman.

RECOMMENDATION 2012–1 TO THE SECRETARY OF ENERGY Savannah River Site Building 235–F Safety Pursuant to 42 U.S.C. 2286a(a)(5), Atomic Energy Act of 1954, As Amended

Dated: May 9, 2012

Background

The Defense Nuclear Facilities Safety Board (Board) believes that the Department of Energy (DOE) needs to take action to remove and/or immobilize the residual contamination within Building 235–F because of the potential dose consequences to collocated workers and the public. Furthermore, the Board believes that DOE must also take near-term action to more effectively prevent a major fire in Building 235–F.

Building 235–F at the Savannah River Site (SRS) houses several partially deactivated processing lines including the Plutonium Fuel Form (PuFF) facility, Actinide Billet Line, Plutonium Experimental Facility, and the old metallography lab glovebox. Building 235–F no longer has a DOE mission. It is currently operated in a surveillance and maintenance mode and is normally unoccupied.

With the exception of residual contamination, Building 235–F has been de-inventoried of special nuclear material. The remaining residual contamination is the principal hazard posed by Building 235–F and includes a significant quantity of plutonium-238 (Pu-238). More than 95 percent of the Pu-238 is located in the PuFF facility; approximately 82 percent is concentrated in 2 of the 9 PuFF facility cells. It should be noted that the residual Pu-238 contamination is a fine ball-milled powder that is in a highly dispersible form, which increases the potential dose consequences associated with a radiological release.

The responsible SRS contractor, Savannah River Nuclear Solutions (SRNS), has determined that the unmitigated consequences of a seismically-induced full-facility fire are greater than 10 rem offsite and 27,000 rem to the collocated worker at 100 meters. F-Area routinely has more than a thousand site workers who are normally in the facilities, construction sites, and trailers located adjacent to Building 235–F. Some of the trailers that house workers are located within the Building 235–F fence line.

While DOE does not conduct any operations within Building 235–F, fires could start inside the building if energized electrical equipment or wiring failed or was damaged during a seismic or other natural hazard event. Electrical sparks or heat from electrical equipment could ignite adjacent combustible material. Two of the key preventive controls for fire scenarios are eliminating potential ignition sources and controlling the amount of combustibles. In September 2011, during a walkdown of Building 235–F, the Board's staff identified a significant quantity of transient and fixed combustibles and unnecessary electrical equipment that had not been air gapped. DOE has taken action to remove the transient combustible material and to limit access to Building 235–F. However, no actions are currently planned to remove the fixed combustibles or unneeded electrical equipment.

In the event of a fire, Building 235–F has several vulnerabilities. First, the Building 235–F fire detection system is not credited, does not provide complete coverage, nor is the building normally occupied; consequently, a fire could smolder and burn undetected. Second, Building 235–F does not have a fire suppression system to prevent an incipient stage fire from growing into a room fire. Third, Building 235–F does not have fire barriers with a qualified fire rating to prevent the spread of a fire to adjacent rooms. The Building 235–F Fire Hazards Analysis notes that the subdividing walls and floors are in many places incomplete or penetrated and are not adequately sealed to achieve a qualified fire rating. In addition, some of the existing walls contain cellulose, which is combustible and could allow a room fire to spread to other portions of the building. Fourth, the absence of standpipes or hose connections inhibits the ability of the fire department to fight a fire inside Building 235–F. To combat a fire, firefighters would need to prop open the exterior doors to allow the passage of fire hoses; this would allow smoke and firewater, potentially

contaminated with radioactive material, into the environment.

The July 2011 draft of the Basis for Interim Operations (BIO), prepared by SRNS notes that the Building 235–F structure can only provide limited confinement during or following a seismic event because seismically-induced building cracks may develop. Consequently, the building structure cannot be credited as a control to prevent a post-seismic unfiltered release. In 2010, DOE took action to improve the safety posture of Building 235–F by reducing the height of the abandoned stack located adjacent to the building. The contractor's structural analysis indicated that the concrete stack, prior to the height reduction, could have collapsed onto Building 235–F during a seismic event causing significant structural damage.

In addition to fires, loss of confinement accidents could also release radioactive material. For instance, a release could be caused by a breach of the confinement or the ventilation system during a seismic event. However, the Building 235–F confinement ventilation system cannot be relied upon to continue to perform its safety function during or following a seismic event. The draft BIO states that non-load-bearing building elements may fail during a Performance Category-3 seismic event, resulting in impact damage to safety-related structures, systems, and components such as ventilation ducts. The draft BIO states that the metal ventilation ducts may leak after an earthquake because they are not completely welded and that the concrete roof exhaust tunnel may develop cracks.

Loss of confinement can be caused by degraded equipment. The deteriorated condition of the PuFF facility was noted in an October 1991 report by DOE's Office of Nuclear Safety,[1] which identified as an issue the integrity of elastomer seals that form part of the confinement boundaries inside Building 235–F. In addition to degradation with age, these elastomer seals also degrade with exposure to Pu-238. Although identified two decades ago, this issue remains. The cells have numerous penetrations (e.g., glove ports, viewing windows, ventilation supply and exhaust, utility services). In the draft BIO, SRNS stated that ''the [elastomer] seals around the cell and glovebox penetrations are expected to be in a degraded condition due to the years of operation in a radiation environment.'' The continued deterioration of the elastomer seals increases the potential for the spread of the contamination outside of the cells. Even under normal operations, a loss of confinement from these cells would greatly increase the complexity and hazard associated with decontamination and decommissioning of Building 235–F.

DOE conducted a small fire drill at Building 235–F in December 2011, which simulated a minor radiological release. While DOE conducts periodic drills, DOE has not conducted a Building 235–F radiological drill involving the adjacent Mixed Oxide Fuel Fabrication Facility or Waste Solidification Building construction sites to examine how these facilities would respond to a significant radiological release from Building 235–F. In the event of a significant radiological release, the amount of mitigation provided by sheltering in place may not be sufficient to protect nearby workers. This is especially true for seismically-induced fires, since the same seismic event may also damage nearby trailers and administrative buildings.

The Board has previously identified the need to address the residual contamination in Building 235–F. In a June 12, 2003, letter to the Secretary of Energy, the Board noted that the risk associated with several hazards in Building 235–F, including the Pu-238 residual contamination, had been accepted rather than eliminated. The report enclosed with the June letter further noted that DOE should consider decontaminating areas with residual contamination to reduce the risk associated with a potential release. Since that time, DOE has on a number of occasions evaluated options and developed plans to address the residual contamination. However, these efforts have not successfully transitioned from planning to execution, and the residual contamination and the hazard it poses still remain in Building 235–F.

Conclusion

The Board believes that due to the potential dose consequences to collocated workers and the public, it is unacceptable for the residual contamination within Building 235–F to continue to remain unaddressed.

Recommendation

Given the continuing hazard posed by Building 235–F as detailed above, the Board recommends that DOE:

1. Take action to immobilize and/or remove the Pu-238 that remains as residual contamination within Building 235–F.

2. Concurrent with sub-Recommendation 1, take near-term actions and implement compensatory measures to improve the safety posture of Building 235–F and reduce the potential for and severity of a radiological release, including but not limited to the following.

a. To the extent feasible, remove from Building 235–F all transient and fixed combustibles that are not directly necessary for surveillance and maintenance activities and ensure that the transient combustible loading in the facility remains as low as reasonably achievable.

b. Ensure that all electrical equipment not necessary to support facility safety systems, life safety, or surveillance and maintenance activities is de-energized and air gapped. Remove all electrical and support equipment remaining within former process areas that is not necessary for surveillance and maintenance.

c. Evaluate the condition and operability of early detection and alarm systems in the PuFF facility, such as the heat and smoke detectors (with the exception of those located within the PuFF facility cells, if evaluating them would require intrusion into the cells). Take action, as necessary, to ensure that these systems are credited in the safety basis, are remotely monitored, provide reliable detection of hazards, and are maintained in accordance with National Fire Protection Association 72, National Fire Protection Alarm and Signaling Code.

3. Concurrent with sub-Recommendation 1, take action to ensure that the SRS emergency response to a radiological release from Building 235–F is adequate and effective, including but not limited to the following.

a. Ensure that an integrated emergency response plan is in place that considers the collocated workers in facilities, construction sites, and trailers located adjacent to Building 235–F. Development of this plan should include an evaluation of the specific locations where collocated workers are directed to shelter in place to ensure their adequate protection during and following a potential radiological release from Building 235–F.

b. Ensure that periodic coordinated drills in response to a simulated event at Building 235–F are conducted. Such drills should include appropriate response actions by personnel in the adjacent facilities and construction sites, such as sheltering in place or evacuating depending on proximity to

[1] U.S. Department of Energy, 1991, Report of an Investigation into the Deterioration of the Plutonium Fuel Form Fabrication Facility (PuFF) at the DOE Savannah River Site, DOE/NS–0002P, *http://www.osti.gov/bridge/servlets/purl/6246281-tBgi3H/6246281.pdf.*

the simulated plume of radioactive material.

The Board urges the Secretary to avail himself of the authority under the Atomic Energy Act (42 U.S.C. 2286d(e)) to ''implement any such recommendation (or part of any such recommendation) before, on, or after the date on which the Secretary transmits the implementation plan to the Board under this subsection.''

Peter S. Winokur, Ph.D.,

Chairman.

[FR Doc. 2012–12179 Filed 5–18–12; 8:45 am]

BILLING CODE 3670–01–P

DEPARTMENT OF EDUCATION

Notice of Submission for OMB Review; Federal Student Aid; William D. Ford Federal Direct Loan (Direct Loan) Program: Internship/Residency and Loan Debt Burden Forbearance Forms

SUMMARY: These forms serve as the means by which a borrower may request forbearance of repayment on his or her William D. Ford Federal Direct Loan (Direct Loan) or Federal Family Education Loan (FFEL) Program loans based on participation in an eligible internship/residency program, National Guard duty, receiving benefits under the Department of Defense's Student Loan Repayment Program, or having a federal education loan debt burden that equals or exceeds 20 percent of the borrower's monthly gross income.

DATES: Interested persons are invited to submit comments on or before June 20, 2012.

ADDRESSES: Written comments regarding burden and/or the collection activity requirements should be electronically mailed to *ICDocketMgr@ed.gov* or mailed to U.S. Department of Education, 400 Maryland Avenue SW., LBJ, Washington, DC 20202–4537. Copies of the proposed information collection request may be accessed from *http://edicsweb.ed.gov,* by selecting the ''Browse Pending Collections'' link and by clicking on link number 04798. When you access the information collection, click on ''Download Attachments'' to view. Written requests for information should be addressed to U.S. Department of Education, 400 Maryland Avenue SW., LBJ, Washington, DC 20202–4537. Requests may also be electronically mailed to *ICDocketMgr@ed.gov* or faxed to 202–401–0920. Please specify the complete title of the information collection and OMB Control Number when making your request.

Individuals who use a telecommunications device for the deaf (TDD) may call the Federal Information Relay Service (FIRS) at 1–800–877–8339.

SUPPLEMENTARY INFORMATION: Section 3506 of the Paperwork Reduction Act of 1995 (44 U.S.C. Chapter 35) requires that Federal agencies provide interested parties an early opportunity to comment on information collection requests. The Acting Director, Information Collection Clearance Division, Privacy, Information and Records Management Services, Office of Management, publishes this notice containing proposed information collection requests at the beginning of the Departmental review of the information collection. The Department of Education is especially interested in public comment addressing the following issues: (1) Is this collection necessary to the proper functions of the Department; (2) will this information be processed and used in a timely manner; (3) is the estimate of burden accurate; (4) how might the Department enhance the quality, utility, and clarity of the information to be collected; and (5) how might the Department minimize the burden of this collection on the respondents, including through the use of information technology. Please note that written comments received in response to this notice will be considered public records.

Title of Collection: William D. Ford Federal Direct Loan (Direct Loan) Program: Internship/Residency and Loan Debt Burden Forbearance Forms.

OMB Control Number: 1845–0018.

Type of Review: Revision.

Total Estimated Number of Annual Responses: 25,842.

Total Estimated Number of Annual Burden Hours: 5,814.

Abstract: The U.S. Department of Education and FFEL Program lenders and servicers use the information collected on these forms to determine whether a borrower meets the eligibility requirements for the specific forbearance type that the borrower has requested. This collection is being revised so that it may be used by both the Direct Loan and FFEL Programs and also expands one of the mandatory forbearance forms to include additional mandatory forbearances; as a result, additional data elements have been added to support the additional forbearances.

Dated: May 11, 2012.

Kate Mullan,

Acting Director, Information Collection Clearance Division, Privacy, Information and Records Management Services, Office of Management.

[FR Doc. 2012–11974 Filed 5–18–12; 8:45 am]

BILLING CODE 4000–01–P

DEPARTMENT OF EDUCATION

Notice of Submission for OMB Review; Federal Student Aid; William D. Ford Federal Direct Loan Program Deferment Request Forms

SUMMARY: These forms serve as the means by which borrowers in the William D. Ford Federal Direct Loan (Direct Loan) and Federal Family Education Loan (FFEL) Programs may request deferment of repayment on their loans if they meet certain statutory and regulatory criteria.

DATES: Interested persons are invited to submit comments on or before June 20, 2012.

ADDRESSES: Written comments regarding burden and/or the collection activity requirements should be electronically mailed to *ICDocketMgr@ed.gov* or mailed to U.S. Department of Education, 400 Maryland Avenue SW., LBJ, Washington, DC 20202–4537. Copies of the proposed information collection request may be accessed from *http://edicsweb.ed.gov,* by selecting the ''Browse Pending Collections'' link and by clicking on link number 04789. When you access the information collection, click on ''Download Attachments'' to view. Written requests for information should be addressed to U.S. Department of Education, 400 Maryland Avenue SW., LBJ, Washington, DC 20202–4537. Requests may also be electronically mailed to *ICDocketMgr@ed.gov* or faxed to 202–401–0920. Please specify the complete title of the information collection and OMB Control Number when making your request.

Individuals who use a telecommunications device for the deaf (TDD) may call the Federal Information Relay Service (FIRS) at 1–800–877–8339.

SUPPLEMENTARY INFORMATION: Section 3506 of the Paperwork Reduction Act of 1995 (44 U.S.C. Chapter 35) requires that Federal agencies provide interested parties an early opportunity to comment on information collection requests. The Acting Director, Information Collection Clearance Division, Privacy, Information and Records Management Services, Office of Management, publishes this notice containing proposed information

collection requests at the beginning of the Departmental review of the information collection. The Department of Education is especially interested in public comment addressing the following issues: (1) Is this collection necessary to the proper functions of the Department; (2) will this information be processed and used in a timely manner; (3) is the estimate of burden accurate; (4) how might the Department enhance the quality, utility, and clarity of the information to be collected; and (5) how might the Department minimize the burden of this collection on the respondents, including through the use of information technology. Please note that written comments received in response to this notice will be considered public records.

Title of Collection: William D. Ford Federal Direct Loan Program Deferment Request Forms.

OMB Control Number: 1845–0011.

Type of Review: Revision.

Total Estimated Number of Annual Responses: 3,130,831.

Total Estimated Number of Annual Burden Hours: 500,933.

Abstract: The U.S. Department of Education uses the information collected on these forms to determine whether a borrower meets the eligibility requirements for the specific deferment type that the borrower has requested. The burden hours associated with this collection is increasing for one reason; namely, that the collection is being combined with the soon-to-be-discontinued 1845–0005 so that the forms associated with this collection may be used in both the FFEL and Direct Loan Program.

Dated: May 11, 2012.

Kate Mullan,

Acting Director, Information Collection Clearance Division, Privacy, Information and Records Management Services, Office of Management.

[FR Doc. 2012–11975 Filed 5–18–12; 8:45 am]

BILLING CODE 4000–01–P

DEPARTMENT OF EDUCATION

Applications for New Awards; Technology and Media Services for Individuals With Disabilities—Stepping-Up Technology Implementation

AGENCY: Office of Special Education and Rehabilitative Services, Department of Education.

ACTION: Notice.

Overview Information; Technology and Media Services for Individuals With Disabilities—Stepping-Up Technology Implementation; Notice Inviting Applications for New Awards for Fiscal Year (FY) 2012.

Catalog of Federal Domestic Assistance (CFDA) Number: 84.327S.

DATES: *Applications Available:* May 21, 2012.

Deadline for Transmittal of Applications: July 5, 2012.

Deadline for Intergovernmental Review: September 3, 2012.

Full Text of Announcement

I. Funding Opportunity Description

Purpose of Program: The purposes of the Technology and Media Services for Individuals with Disabilities program are to: (1) Improve results for students with disabilities by promoting the development, demonstration, and use of technology; (2) support educational media services activities designed to be of educational value in the classroom for students with disabilities; and (3) provide support for captioning and video description that is appropriate for use in the classroom.

Priority: In accordance with 34 CFR 75.105(b)(2)(v), this priority is from allowable activities specified in the statute (see sections 674 and 681(d) of the Individuals with Disabilities Education Act (IDEA) (20 U.S.C. 1400 et seq.)).

Absolute Priority: For FY 2012, this priority is an absolute priority. Under 34 CFR 75.105(c)(3), we consider only applications that meet this priority.

This priority is: Technology and Media Services for Individuals with Disabilities—Stepping-Up Technology Implementation.

Background: The purpose of this priority is to fund cooperative agreements to: (a) Identify resources [1] needed to effectively implement evidence-based [2] technology tools [3] that benefit students with disabilities, and (b) develop and disseminate products [4] that will help a broad range of schools to effectively implement these technology tools.

As Congress recognized in IDEA, ''almost 30 years of research and experience has demonstrated that the education of children with disabilities can be made more effective by * * * supporting the development and use of technology, including assistive technology devices and assistive technology services, to maximize accessibility for children with disabilities'' (section 601(c)(5)(H) of the IDEA). The use of technology, including assistive technology devices and assistive technology services, enhances instruction and access to the general education curriculum. Since 1998, the Office of Special Education Programs (OSEP) has supported technology and media service projects through the Steppingstones of Technology Innovation for Children with Disabilities (Steppingstones) program. The projects funded under the Steppingstones program developed and evaluated numerous innovative technology tools designed to improve results for children with disabilities. Examples of such tools include: Web-based learning and assessment materials, instructional software, assistive technology devices, methods for using off-the-shelf hardware and software to improve learning, and methods for integrating technology into instruction. In addition, the Department's Institute of Education Sciences (IES) now supports projects to develop and evaluate innovative technology tools. The Stepping-up Technology Implementation program will build on these technology development efforts by identifying, developing, and disseminating products and resources that promote the effective implementation [5] of evidence-based instructional and assistive technology tools in kindergarten through grade 12 (K–12) settings.[6]

The employment of products and resources designed to assist with the

[1] For the purposes of this priority, ''resources'' include, but are not limited to, school leadership support, professional development support to school staff, and a plan for integrating technology into the classroom curriculum.

[2] For the purposes of this priority, ''evidence-based'' means practices for which there is ''strong evidence'' or ''moderate evidence'' of effectiveness as defined in the Department's notice of final supplemental priorities for discretionary grant programs published in the **Federal Register** on December 15, 2010 (75 FR 78486), and corrected on May 12, 2011 (76 FR 27637).

[3] For the purposes of this priority, ''technology tools'' may include, but are not limited to, digital math text readers for students with visual impairment, reading software to improve literacy and communication development, and text-to-speech software to improve reading performance. These tools must assist or otherwise benefit students with disabilities.

[4] For the purposes of this priority, ''products'' may include, but are not limited to, instruction manuals, lesson plans, demonstration videos, ancillary instructional materials, and professional development modules such as collaborative groups, coaching, mentoring, or online supports.

[5] In this context, ''implementation'' refers to processes and activities that are purposeful and are described in sufficient detail such that independent observers can detect the presence and strength of these specific set of processes and activities (Fixsen, Naoom, Blase, Friedman & Wallace, 2005).

[6] For the purposes of this priority, ''settings'' include general education classrooms, special education classrooms or any place where school-based instruction occurs.

implementation of evidence-based technology tools is critical to ensuring that these tools will be effectively used to improve the academic achievement of children with disabilities. Data from a survey of more than 1,000 K–12 teachers, principals, and assistant principals indicated that simply providing teachers with technology does not ensure that it will be used. The survey also indicated that while newer teachers may use technology in their personal lives more often than veteran teachers, they do not use it more frequently in their classrooms than veteran teachers do. In addition, the survey indicated that the more often teachers use technology to improve students' daily classroom engagement, the more likely teachers are to recognize the benefits to understanding different student learning styles (Grunwald, 2010). Additionally, Perlman and Redding (2011) found that in order to be used most effectively, technology must be implemented in ways that align with curricular and teacher goals and must offer students opportunities to use these tools in their learning. These findings demonstrate a need for products and resources that can ensure technology tools for students with disabilities are implemented effectively.

Priority: The purpose of this priority is to fund cooperative agreements to: (a) Identify resources needed to effectively implement evidence-based technology tools that benefit students with disabilities; and (b) develop and disseminate products (e.g., instruction manuals, lesson plans, demonstration videos, ancillary instructional materials) that will help K–12 schools to effectively implement these technology tools.

To be considered for funding under this absolute priority, applicants must meet the application requirements. Any project funded under this absolute priority must also meet the programmatic and administrative requirements specified in the priority.

Application Requirements: An applicant must include in its application—

(a) A logic model or conceptual framework that depicts at a minimum, the goals, activities, outputs and outcomes of the proposed project. A logic model communicates how a project will achieve its outcomes and provides a framework for both formative and summative evaluations of the project;

Note: The following Web sites provide more information on logic models: *www.researchutilization.org/matrix/logicmodel_resource3c.html* and *www.tadnet.org/model_and_performance.*

(b) A plan to implement the activities described in the *Project Activities* section of this priority;

(c) A plan, linked to the proposed project's logic model, for a formative evaluation of the proposed project's activities. The plan must describe how the formative evaluation will use clear performance objectives to ensure continuous improvement in the operation of the proposed project, including objective measures of progress in implementing the project and ensuring the quality of products and services;

(d) A plan for recruiting and selecting the following:

(1) Three development schools. Development schools are the sites in which iterative development[7] of the implementation of technology tools and products will occur. The project must start implementing the technology tool with one development school in year one of the project period and two additional development schools in year two.

(2) Four pilot schools. Pilot schools are the sites in which try-out, formative evaluation, and refinement of technology tools and products will occur. The project must work with the four pilot schools during years three and four of the project period.

(3) Ten dissemination schools. Dissemination schools will be selected if the project is extended for a fifth year. Dissemination schools will be used to conduct the final test of the effectiveness of the products and the final opportunity for the project to refine the products for use by teachers, but will receive less technical assistance (TA) from the project than the development or pilot schools. Also, at this stage, dissemination schools will extend the benefits of the technology tool to additional students. To be selected as a dissemination school, eligible schools and local educational agencies (LEAs) must commit to working with the project to implement the evidence-based technology tool. A school may not serve in more than one category (i.e., development, pilot, dissemination).

(e) Information (e.g., elementary, middle, or high school; persistently lowest-achieving school;[8] priority school[9]) about the development, pilot, and dissemination schools; their demographics (e.g., student race or ethnicity, percentage of students eligible for free or reduced-price lunch); and other pertinent data.

(f) Documentation of the evidence of the validity, usability, feasibility, and reliability of the technology tool to be implemented to improve academic achievement.

(g) A budget for attendance at the following:

(1) A one and one half day kick-off meeting to be held in Washington, DC, after receipt of the award, and an annual planning meeting held in Washington, DC, with the OSEP Project Officer and other relevant staff during each subsequent year of the project period.

Note: Within 30 days of the award, a post-award teleconference must be held between the OSEP Project Officer and the grantee's project director or other authorized representative.

(2) A three-day Project Directors' Conference in Washington, DC, during each year of the project period.

(3) Two two-day trips annually to attend Department briefings, Department-sponsored conferences, and other meetings, as requested by OSEP.

[7] For the purposes of this priority, ''iterative development'' refers to a process of testing, systematically securing feedback, and then revising the educational intervention that leads to revisions in the intervention to increase the likelihood that it will be implemented with fidelity (Diamond & Powell, 2011).

[8] The term ''persistently lowest-achieving schools'' means, as determined by the State—

(a)(1) Any Title I school in improvement, corrective action, or restructuring that—

(i) Is among the lowest-achieving five percent of Title I schools in improvement, corrective action, or restructuring or the lowest- achieving five Title I schools in improvement, corrective action, or restructuring in the State, whichever number of schools is greater; or

(ii) Is a high school that has had a graduation rate as defined in 34 CFR 200.19(b) that is less than 60 percent over a number of years; and

(2) Any secondary school that is eligible for, but does not receive, Title I funds that—

(i) Is among the lowest-achieving five percent of secondary schools or the lowest-achieving five secondary schools in the State that are eligible for, but do not receive, Title I funds, whichever number of schools is greater; or

(ii) Is a high school that has had a graduation rate as defined in 34 CFR 200.19(b) that is less than 60 percent over a number of years.

(b) To identify the persistently lowest-achieving schools, a State must take into account both—

(i) The academic achievement of the ''all students'' group in a school in terms of proficiency on the State's assessments under section 1111(b)(3) of the Elementary and Secondary Education Act of 1965, as amended (ESEA) in reading/language arts and mathematics combined; and

(ii) The school's lack of progress on those assessments over a number of years in the ''all students'' group.

For the purposes of this priority, the Department considers schools that are identified as Tier I or Tier II schools under the School Improvement Grants Program (see 75 FR 66363) as part of a State's approved FY 2009 or FY 2010 applications to be persistently lowest-achieving schools. A list of these Tier I and Tier II schools can be found on the Department's Wyeb site at *www2.ed.gov/programs/sif/index.html.*

[9] The term ''priority school'' means a school that has been identified by the State as a priority school pursuant to the State's approved request for ESEA flexibility.

Project Activities. To meet the requirements of this priority, the project, at a minimum, must conduct the following activities:

(a) Recruit a minimum of three development schools in one LEA and four pilot schools across at least two LEAs in accordance with the plan proposed under paragraph (d) of the *Application Requirements* section of this notice.

Note: Final site selection will be determined in consultation with the OSEP Project Officer following the kick-off meeting.

(b) Identify resources and develop products to support sustained implemention of the selected technology tool. Development of the products must be an interactive process beginning in a single development school and continuing through iterative cycles of development and refinement in the other development schools, followed by a formative evaluation and refinement in the pilot schools. The products must include, at a minimum, the following components to support implementation of the technology tool:

(1) An instrument or method for assessing (i) the need for the technology tool, and (ii) readiness to implement it. Instruments and methods may include resource inventory checklists, school self-study guides, surveys of teacher interest, detailed descriptions of the technology tool for review by school staff, and similar approaches used singly or in combination.

(2) Methods and manuals to support the implementation of the technology tool.

(3) Professional development activities necessary for teachers to implement the technology tool with fidelity and integrate it into the curriculum.

(c) Collect and analyze data on the effect of the technology tool on academic achievement.

(d) Collect formative and summative evaluation data from the development schools and pilot schools to refine and evaluate the products.

(e) If the project is extended to a fifth year, provide the products and the technology tool to no fewer than 10 dissemination schools that are not the same schools used as development and pilot schools.

(f) Collect summative data about the success of the products in supporting implementation of the technology tool in the dissemination schools; and

(g) By the end of the project period, projects must provide information on:

(1) The products and resources that will enable other schools to implement and sustain implementation of the technology tool.

(2) How the technology tool has improved academic achievement for children with disabilities.

(3) A strategy for disseminating the technology tool and accompanying products beyond the schools directly involved in the project.

Collaboration With the Model Demonstration Coordination Center (MDCC)

Although these projects are not model demonstration projects, the MDCC, an OSEP-funded project, will provide coordination support among the projects. Each project funded under this priority must—

(a) Coordinate with the MDCC and the other projects to determine times for cross-project collaboration conference calls. Individual project timelines may need to be adjusted once the cross-project collaboration calls are established;

(b) Provide MDCC with a description of the schools as described in paragraph (e) of the *Application Requirements* section of this notice; and

(c) Participate in conference call discussions, organized and facilitated by the MDCC, concerning topics such as site selection, evaluation design issues, implementation strategies, sustainability, documentation, and dissemination.

Note: The following Web site provides more information on the MDCC: http://mdcc.sri.com.

Fifth Year of the Project: The Secretary may extend a project one year beyond 48 months to work with dissemination schools if the grantee is achieving the intended outcomes and making a positive contribution to the implementation of an evidence-based technology tool in the development and pilot schools. Each applicant must include in its application a plan for the full 60-month award. In deciding whether to continue funding the project for the fifth year, the Secretary will consider the requirements of 34 CFR 75.253(a), and in addition—

(a) The recommendation of a review team consisting of the OSEP Project Officer and other experts selected by the Secretary. This review will be held during the last half of the third year of the project period;

(b) The timeliness and effectiveness with which all requirements of the negotiated cooperative agreement have been or are being met by the project; and

(c) Evidence of the degree to which the project's activities have contributed to changed practices and improved academic achievement for students with disabilities.

References

Diamond, K.E. & Powell, D.R. (2011). An iterative approach to the development of a professional development intervention for head start teachers. *Journal of Early Intervention, 33*(1), 75–93.

Fixsen, D.L., Naoom, S.F., Blase, K.A., Friedman, R.M., & Wallace, F. (2005). Implementation Research: A Synthesis of the Literature. Tampa, FL: University of South Florida, Louis de la Parte Florida Mental Health Institute, The National Implementation Research Network.

Grunwald and Associates. (2010). Educators, Technology and 21st Century Skills: Dispelling Five Myths. Minneapolis, MN: Walden University, Richard W. Riley College of Education. Retrieved from *www.WaldenU.edu/fivemyths.*

Perlman, C.L. & Redding, S. (Eds). (2011). Choosing and Implementing Technology Wisely. Handbook on Effective Implementation of School Improvement Grants. Lincoln, IL: Academic Development Institute. Retrieved from *www.centerii.org/handbook.*

Waiver of Proposed Rulemaking: Under the Administrative Procedure Act (APA) (5 U.S.C. 553) the Department generally offers interested parties the opportunity to comment on proposed priorities and requirements. Section 681(d) of IDEA, however, makes the public comment requirements of the APA inapplicable to the priority in this notice.

Program Authority: 20 U.S.C. 1474 and 1481.

Applicable Regulations: (a) The Education Department General Administrative Regulations (EDGAR) in 34 CFR parts 74, 75, 77, 79, 80, 81, 82, 84, 86, 97, 98, and 99. (b) The Education Department debarment and suspension regulations in 2 CFR part 3485.

Note: The regulations in 34 CFR part 79 apply to all applicants except federally recognized Indian tribes.

Note: The regulations in 34 CFR part 86 apply to institutions of higher education only.

II. Award Information

Type of Award: Cooperative agreement.

Estimated Available Funds: $3,500,000.

Contingent upon the availability of funds and the quality of applications, we may make additional awards in FY 2013 from the list of unfunded applicants from this competition.

Estimated Range of Awards: $475,000 to $500,000.

Estimated Average Size of Award: $500,000.

Maximum Award: We will reject any application that proposes a budget exceeding $500,000 for a single budget period of 12 months. The Assistant

Secretary for Special Education and Rehabilitative Services may change the maximum amount through a notice published in the **Federal Register**.

Estimated Number of Awards: 7.

Note: The Department is not bound by any estimates in this notice.

Project Period: Up to 48 months with an optional additional 12 months based on performance. Applications must include plans for both the 48 month award and the 12 month extension.

III. Eligibility Information

Eligible Applicants: State educational agencies (SEAs); LEAs, including public charter schools that are considered LEAs under State law; IHEs; other public agencies; private nonprofit organizations; outlying areas; freely associated States; Indian tribes or tribal organizations; and for-profit organizations.

2. *Cost Sharing or Matching:* This competition does not require cost sharing or matching.

3. *Other: General Requirements:*

(a) The projects funded under this competition must make positive efforts to employ, and advance in employment, qualified individuals with disabilities (see section 606 of IDEA).

(b) The applicant and grant recipient funded under this competition must involve individuals with disabilities or parents of individuals with disabilities ages birth through 26 in planning, implementing, and evaluating the project (see section 682(a)(1)(A) of IDEA).

IV. Application and Submission Information

1. *Address to Request Application Package:* Education Publications Center (ED Pubs), U.S. Department of Education, P.O. Box 22207, Alexandria, VA 22304. Telephone, toll free: 1–877–433–7827. Fax: (703) 605–6794. If you use a telecommunications device for the deaf (TDD) or a text telephone (TTY), call, toll free: 1–877–576–7734.

You can contact ED Pubs at its Web site, also: *www.EDPubs.gov* or at its email address: edpubs@inet.ed.gov.

If you request an application package from ED Pubs, be sure to identify this competition as follows: CFDA number 84.327S.

Individuals with disabilities can obtain a copy of the application package in an accessible format (e.g., braille, large print, audiotape, or compact disc) by contacting the person or team listed under *Accessible Format* in section VIII of this notice.

2. *Content and Form of Application Submission:* Requirements concerning the content of an application, together with the forms you must submit, are in the application package for this competition.

Page Limit: The application narrative (Part III of the application) is where you, the applicant, address the selection criteria that reviewers use to evaluate your application. You must limit Part III to the equivalent of no more than 50 pages, using the following standards:

- A ''page'' is 8.5'' x 11'', on one side only, with 1'' margins at the top, bottom, and both sides.
- Double space (no more than three lines per vertical inch) all text in the application narrative, including titles, headings, footnotes, quotations, references, and captions.
- Use a font that is either 12 point or larger or no smaller than 10 pitch (characters per inch).
- Use one of the following fonts: Times New Roman, Courier, Courier New, or Arial. An application submitted in any other font (including Times Roman or Arial Narrow) will not be accepted.

The page limit does not apply to Part I, the cover sheet; Part II, the budget section, including the narrative budget justification; Part IV, the assurances and certifications; or the one-page abstract, the resumes, the bibliography, the references, or the letters of support. However, the page limit does apply to all of the application narrative section (Part III).

We will reject your application if you exceed the page limit; or if you apply other standards and exceed the equivalent of the page limit.

3. *Submission Dates and Times: Applications Available:* May 21, 2012.

Deadline for Transmittal of Applications: July 5, 2012.

Applications for grants under this competition may be submitted electronically using the *Grants.gov* Apply site (Grants.gov), or in paper format by mail or hand delivery. For information (including dates and times) about how to submit your application electronically, or in paper format by mail or hand delivery, please refer to section IV. 7. *Other Submission Requirements* of this notice.

We do not consider an application that does not comply with the deadline requirements.

Individuals with disabilities who need an accommodation or auxiliary aid in connection with the application process should contact the person listed under **FOR FURTHER INFORMATION CONTACT** in section VII of this notice. If the Department provides an accommodation or auxiliary aid to an individual with a disability in connection with the application process, the individual's application remains subject to all other requirements and limitations in this notice.

Deadline for Intergovernmental Review: September 3, 2012.

4. *Intergovernmental Review:* This competition is subject to Executive Order 12372 and the regulations in 34 CFR part 79. Information about Intergovernmental Review of Federal Programs under Executive Order 12372 is in the application package for this competition.

5. *Funding Restrictions:* We reference regulations outlining funding restrictions in the *Applicable Regulations* section of this notice.

6. *Data Universal Numbering System Number, Taxpayer Identification Number, and Central Contractor Registry:* To do business with the Department of Education, you must—

a. Have a Data Universal Numbering System (DUNS) number and a Taxpayer Identification Number (TIN);

b. Register both your DUNS number and TIN with the Central Contractor Registry (CCR), the Government's primary registrant database;

c. Provide your DUNS number and TIN on your application; and

d. Maintain an active CCR registration with current information while your application is under review by the Department and, if you are awarded a grant, during the project period.

You can obtain a DUNS number from Dun and Bradstreet. A DUNS number can be created within one business day.

If you are a corporate entity, agency, institution, or organization, you can obtain a TIN from the Internal Revenue Service. If you are an individual, you can obtain a TIN from the Internal Revenue Service or the Social Security Administration. If you need a new TIN, please allow 2–5 weeks for your TIN to become active.

The CCR registration process may take five or more business days to complete. If you are currently registered with the CCR, you may not need to make any changes. However, please make certain that the TIN associated with your DUNS number is correct. Also note that you will need to update your CCR registration on an annual basis. This may take three or more business days to complete.

In addition, if you are submitting your application via Grants.gov, you must (1) be designated by your organization as an Authorized Organization Representative (AOR); and (2) register yourself with Grants.gov as an AOR. Details on these steps are outlined at the following Grants.gov Web page: *www.grants.gov/applicants/get_registered.jsp.*

7. *Other Submission Requirements:* Applications for grants under this competition may be submitted electronically or in paper format by mail or hand delivery.

a. Electronic Submission of Applications

We are participating as a partner in the Governmentwide *Grants.gov* Apply site. The Stepping-up Technology Implementation competition, CFDA number 84.327S, is included in this project. We request your participation in *Grants.gov.*

If you choose to submit your application electronically, you must use the Governmentwide *Grants.gov* Apply site at *www.Grants.gov.* Through this site, you will be able to download a copy of the application package, complete it offline, and then upload and submit your application. You may not email an electronic copy of a grant application to us.

You may access the electronic grant application for the Stepping-Up Technology Implementation competition at *www.Grants.gov.* You must search for the downloadable application package for this program by the CFDA number. Do not include the CFDA number's alpha suffix in your search (e.g., search for 84.327, not 84.327S).

Please note the following:

- Your participation in Grants.gov is voluntary.
- When you enter the Grants.gov site, you will find information about submitting an application electronically through the site, as well as the hours of operation.
- Applications received by Grants.gov are date and time stamped. Your application must be fully uploaded and submitted and must be date and time stamped by the Grants.gov system no later than 4:30:00 p.m., Washington, DC time, on the application deadline date. Except as otherwise noted in this section, we will not accept your application if it is received—that is, date and time stamped by the Grants.gov system—after 4:30:00 p.m., Washington, DC time, on the application deadline date. We do not consider an application that does not comply with the deadline requirements. When we retrieve your application from Grants.gov, we will notify you if we are rejecting your application because it was date and time stamped by the Grants.gov system after 4:30:00 p.m., Washington, DC time, on the application deadline date.
- The amount of time it can take to upload an application will vary depending on a variety of factors, including the size of the application and the speed of your Internet connection. Therefore, we strongly recommend that you do not wait until the application deadline date to begin the submission process through Grants.gov.
- You should review and follow the Education Submission Procedures for submitting an application through Grants.gov that are included in the application package for this competition to ensure that you submit your application in a timely manner to the Grants.gov system. You can also find the Education Submission Procedures pertaining to Grants.gov under News and Events on the Department's G5 system home page at *www.G5.gov.*
- You will not receive additional point value because you submit your application in electronic format, nor will we penalize you if you submit your application in paper format.
- If you submit your application electronically, you must upload all documents electronically, including all information you typically provide on the following forms: The Application for Federal Assistance (SF 424), the Department of Education Supplemental Information for SF 424, Budget Information—Non-Construction Programs (ED 524), and all necessary assurances and certifications.
- If you submit your application electronically, you must upload any narrative sections and all other attachments to your application as files in a PDF (Portable Document) read-only, non-modifiable format. Do not upload an interactive or fillable PDF file. If you upload a file type other than a read-only, non-modifiable PDF or submit a password-protected file, we will not review that material.
- Your electronic application must comply with any page-limit requirements described in this notice.
- After you electronically submit your application, you will receive from *Grants.gov* an automatic notification of receipt that contains a *Grants.gov* tracking number. (This notification indicates receipt by *Grants.gov* only, not receipt by the Department.) The Department then will retrieve your application from *Grants.gov* and send a second notification to you by email. This second notification indicates that the Department has received your application and has assigned your application a PR/Award number (an ED-specified identifying number unique to your application).
- We may request that you provide us original signatures on forms at a later date.

Application Deadline Date Extension in Case of Technical Issues with the Grants.gov System: If you are experiencing problems submitting your application through *Grants.gov,* please contact the *Grants.gov* Support Desk, toll free, at 1–800–518–4726. You must obtain a *Grants.gov* Support Desk Case Number and must keep a record of it.

If you are prevented from electronically submitting your application on the application deadline date because of technical problems with the Grants.gov system, we will grant you an extension until 4:30:00 p.m., Washington, DC time, the following business day to enable you to transmit your application electronically or by hand delivery. You also may mail your application by following the mailing instructions described elsewhere in this notice.

If you submit an application after 4:30:00 p.m. , Washington, DC time, on the application deadline date, please contact the person listed under **FOR FURTHER INFORMATION CONTACT** in section VII of this notice and provide an explanation of the technical problem you experienced with *Grants.gov,* along with the *Grants.gov* Support Desk Case Number. We will accept your application if we can confirm that a technical problem occurred with the *Grants.gov* system and that that problem affected your ability to submit your application by 4:30:00 p.m., Washington, DC time, on the application deadline date. The Department will contact you after a determination is made on whether your application will be accepted.

Note: The extensions to which we refer in this section apply only to the unavailability of, or technical problems with, the *Grants.gov* system. We will not grant you an extension if you failed to fully register to submit your application to *Grants.gov* before the application deadline date and time or if the technical problem you experienced is unrelated to the Grants.gov system.

b. Submission of Paper Applications by Mail

If you submit your application in paper format by mail (through the U.S. Postal Service or a commercial carrier), you must mail the original and two copies of your application, on or before the application deadline date, to the Department at the following address: U.S. Department of Education, Application Control Center, Attention: (CFDA Number 84.327S) LBJ Basement Level 1, 400 Maryland Avenue SW., Washington, DC 20202–4260.

You must show proof of mailing consisting of one of the following:

(1) A legibly dated U.S. Postal Service postmark.

(2) A legible mail receipt with the date of mailing stamped by the U.S. Postal Service.

(3) A dated shipping label, invoice, or receipt from a commercial carrier.

(4) Any other proof of mailing acceptable to the Secretary of the U.S. Department of Education.

If you mail your application through the U.S. Postal Service, we do not accept either of the following as proof of mailing:

(1) A private metered postmark.

(2) A mail receipt that is not dated by the U.S. Postal Service.

If your application is postmarked after the application deadline date, we will not consider your application.

Note: The U.S. Postal Service does not uniformly provide a dated postmark. Before relying on this method, you should check with your local post office.

c. Submission of Paper Applications by Hand Delivery

If you submit your application in paper format by hand delivery, you (or a courier service) must deliver the original and two copies of your application by hand, on or before the application deadline date, to the Department at the following address: U.S. Department of Education, Application Control Center, Attention: (CFDA Number 84.327S) 550 12th Street SW., Room 7041, Potomac Center Plaza, Washington, DC 20202–4260.

The Application Control Center accepts hand deliveries daily between 8:00 a.m. and 4:30:00 p.m., Washington, DC time, except Saturdays, Sundays, and Federal holidays.

Note for Mail or Hand Delivery of Paper Applications: If you mail or hand deliver your application to the Department—

(1) You must indicate on the envelope and—if not provided by the Department—in Item 11 of the SF 424 the CFDA number, including suffix letter, if any, of the competition under which you are submitting your application; and

(2) The Application Control Center will mail to you a notification of receipt of your grant application. If you do not receive this notification within 15 business days from the application deadline date, you should call the U.S. Department of Education Application Control Center at (202) 245–6288.

V. Application Review Information

1. *Selection Criteria:* The selection criteria for this program are from 34 CFR 75.210 and are listed in the application package.

2. *Review and Selection Process:* We remind potential applicants that in reviewing applications in any discretionary grant competition, the Secretary may consider, under 34 CFR 75.217(d)(3), the past performance of the applicant in carrying out a previous award, such as the applicant's use of funds, achievement of project objectives, and compliance with grant conditions. The Secretary may also consider whether the applicant failed to submit a timely performance report or submitted a report of unacceptable quality.

In addition, in making a competitive grant award, the Secretary also requires various assurances including those applicable to Federal civil rights laws that prohibit discrimination in programs or activities receiving Federal financial assistance from the Department of Education (34 CFR 100.4, 104.5, 106.4, 108.8, and 110.23).

3. *Additional Review and Selection Process Factors:* In the past, the Department has had difficulty finding peer reviewers for certain competitions because so many individuals who are eligible to serve as peer reviewers have conflicts of interest. The Standing Panel requirements under section 682(b) of IDEA also have placed additional constraints on the availability of reviewers. Therefore, the Department has determined that, for some discretionary grant competitions, applications may be separated into two or more groups and ranked and selected for funding within specific groups. This procedure will make it easier for the Department to find peer reviewers, by ensuring that greater numbers of individuals who are eligible to serve as reviewers for any particular group of applicants will not have conflicts of interest. It also will increase the quality, independence, and fairness of the review process, while permitting panel members to review applications under discretionary grant competitions for which they also have submitted applications. However, if the Department decides to select an equal number of applications in each group for funding, this may result in different cut-off points for fundable applications in each group.

4. *Special Conditions:* Under 34 CFR 74.14 and 80.12, the Secretary may impose special conditions on a grant if the applicant or grantee is not financially stable; has a history of unsatisfactory performance; has a financial or other management system that does not meet the standards in 34 CFR parts 74 or 80, as applicable; has not fulfilled the conditions of a prior grant; or is otherwise not responsible.

VI. Award Administration Information

1. *Award Notices:* If your application is successful, we notify your U.S. Representative and U.S. Senators and send you a Grant Award Notification (GAN). We may notify you informally, also.

If your application is not evaluated or not selected for funding, we notify you.

2. *Administrative and National Policy Requirements:* We identify administrative and national policy requirements in the application package and reference these and other requirements in the *Applicable Regulations* section of this notice.

We reference the regulations outlining the terms and conditions of an award in the *Applicable Regulations* section of this notice and include these and other specific conditions in the GAN. The GAN also incorporates your approved application as part of your binding commitments under the grant.

3. *Reporting:* (a) If you apply for a grant under this competition, you must ensure that you have in place the necessary processes and systems to comply with the reporting requirements in 2 CFR part 170 should you receive funding under the competition. This does not apply if you have an exception under 2 CFR 170.110(b).

(b) At the end of your project period, you must submit a final performance report, including financial information, as directed by the Secretary. If you receive a multi-year award, you must submit an annual performance report that provides the most current performance and financial expenditure information as directed by the Secretary under 34 CFR 75.118. The Secretary may also require more frequent performance reports under 34 CFR 75.720(c). For specific requirements on reporting, please go to *www.ed.gov/fund/grant/apply/appforms/appforms.html.*

4. *Performance Measures:* Under the Government Performance and Results Act of 1993 (GPRA), the Department has established a set of performance measures, including long-term measures, that are designed to yield information on various aspects of the effectiveness and quality of the Technology and Media Services for Individuals with Disabilities program. These measures are included in the application package and focus on the extent to which projects are of high quality, are relevant to improving outcomes of children with disabilities, and contribute to improving outcomes for children with disabilities. We will collect data on these measures from the project funded under this competition. The grantee will be required to report information on its project's performance in its final performance report to the Department (34 CFR 75.590).

5. *Continuation Awards:* In making a continuation award, the Secretary may consider, under 34 CFR 75.253, the extent to which a grantee has made ''substantial progress toward meeting the objectives in its approved application.'' This consideration includes the review of a grantee's progress in meeting the targets and projected outcomes in its approved application, and whether the grantee has expended funds in a manner that is consistent with its approved application and budget. In making a continuation grant, the Secretary also considers whether the grantee is operating in compliance with the assurances in its approved application, including those applicable to Federal civil rights laws that prohibit discrimination in programs or activities receiving Federal financial assistance from the Department (34 CFR 100.4, 104.5, 106.4, 108.8, and 110.23).

VII. Agency Contact

FOR FURTHER INFORMATION CONTACT: Terry Jackson, U.S. Department of Education, 400 Maryland Avenue SW., room 4081, Potomac Center Plaza (PCP), Washington, DC 20202–2600. Telephone: (202) 245–6039.

If you use a TDD or a TTY, call the Federal Relay Service (FRS), toll free, at 1–800–877–8339.

VIII. Other Information

Accessible Format: Individuals with disabilities can obtain this document and a copy of the application package in an accessible format (e.g., braille, large print, audiotape, or compact disc) by contacting the Grants and Contracts Services Team, U.S. Department of Education, 400 Maryland Avenue SW., room 5075, PCP, Washington, DC 20202–2550. Telephone: (202) 245–7363. If you use a TDD or a TTY, call the FRS, toll free, at 1–800–877–8339.

Electronic Access to This Document: The official version of this document is the document published in the **Federal Register.** Free Internet access to the official edition of the **Federal Register** and the Code of Federal Regulations is available via the Federal Digital System at: *www.gpo.gov/fdsys.* At this site you can view this document, as well as all other documents of this Department published in the **Federal Register,** in text or Adobe Portable Document Format (PDF). To use PDF you must have Adobe Acrobat Reader, which is available free at the site.

You may also access documents of the Department published in the **Federal Register** by using the article search feature at: *www.federalregister.gov.* Specifically, through the advanced search feature at this site, you can limit your search to documents published by the Department.

Dated: May 15, 2012.

Sue Swenson,

Deputy Assistant Secretary for Special Education and Rehabilitative Services. Delegated the Authority to Perform the Functions and Duties of Assistant Secretary for Special Education and Rehabilitative Services.

[FR Doc. 2012–12278 Filed 5–18–12; 8:45 am]

BILLING CODE 4000–01–P

DEPARTMENT OF ENERGY

Electricity Advisory Committee

AGENCY: Office of Electricity Delivery and Energy Reliability, Department of Energy.

ACTION: Notice of open meeting.

SUMMARY: This notice announces a meeting of the Electricity Advisory Committee (EAC). The Federal Advisory Committee Act (Pub. L. 92– 463, 86 Stat. 770) requires that public notice of these meetings be announced in the **Federal Register**.

DATES: Monday, June 11, 2012, 2:00 p.m.–5:00 p.m. (EST), Tuesday, June 12, 2012, 8:00 a.m.–4:00 p.m. (EST).

ADDRESSES: Capitol Hilton, 1001 16th Street NW., Washington, DC 20036.

FOR FURTHER INFORMATION CONTACT: Matthew Rosenbaum, Office of Electricity Delivery and Energy Reliability, U.S. Department of Energy, Forrestal Building, Room 8G–017, 1000 Independence Avenue SW., Washington, DC 20585; Telephone: (202) 586–1060 or Email: *matthew.rosenbaum@hq.doe.gov.*

SUPPLEMENTARY INFORMATION: *Purpose of the Committee:* The Electricity Advisory Committee (EAC) was re-established in July 2010, in accordance with the provisions of the Federal Advisory Committee Act (FACA), as amended, 5 U.S.C., App. 2, to provide advice to the U.S. Department of Energy (DOE) in implementing the Energy Policy Act of 2005, executing the Energy Independence and Security Act of 2007, and modernizing the Nation's electricity delivery infrastructure. The EAC is composed of individuals of diverse background selected for their technical expertise and experience, established records of distinguished professional service, and their knowledge of issues that pertain to electricity.

Tentative Agenda

Tentative Agenda: June 11, 2012

1:30 to 2:00 p.m. Registration

2:00 to 2:30 p.m. Welcome, Introductions and Developments
Richard Cowart, EAC Chair and David Meyer, EAC Designated Federal Official

2:30 to 2:50 p.m. Update on the U.S. Department of Energy (DOE), Office of Electricity Delivery and Energy Reliability's (OE) 2012 Current Programs and Initiatives
Honorable Patricia Hoffman, Assistant Secretary for Electricity Delivery and Energy Reliability, U.S. Department of Energy (invited)

2: 50 to 3:10 p.m. Strategic Plan for DOE OE—Presentation
Bill Parks, Senior Technical Advisor, DOE- OE (invited)

3:10 to 3:30 p.m. Discussion of DOE Initiatives and DOE Strategic Themes

3:40 to 4:45 p.m. Workforce Panel—Where are the Critical Gaps? What can be Done About it?
Wanda Reder, Chair. Panelists will include:
- Barbara Kenny, National Science Foundation (accepted)
- Ann Randazzo, Center for Energy Workforce Development (accepted)
- Gil Bindewald, DOE–OE (invited)

4:45 to 5:00 p.m. EAC Member Discussion of Key Work Force Issues and the Workforce Group's Proposed Whitepaper

5:00 to 5:10 p.m. Wrap up
Richard Cowart, EAC Chair

5:10 p.m. Adjourn Day One of EAC Meeting

June 12, 2012

8:00 to 9:00 a.m. Microgrids Panel—How Could Microgrids Alter the Face of the Electricity Industry? How Soon?
Ralph Masiello, Chair, EAC Storage Subcommittee Chair. Panelists to include:
- Dr. Jeff Marqusee, DOD/OSD
- Will Agate, Vice President, PIDC (Philadelphia Navy Yard)
- Angie Beehler, Walmart (Invited)

9:00 to 9:20 a.m. EAC Discussion of Microgrids Impacts and Possible Next Steps for the EAC

9:20 to 9:45 a.m. EAC Transmission Subcommittee 2012 Work Plan Status
Mike Heyeck, EAC Transmission Subcommittee Chair. Panelists to include:
—Technology (PMU/EMS) work
—Grid Resiliency Work—focus on aging assets in 2012
—PMA Support—Using public process (Cavanagh, Weedall lead)

9:45 to 10:00 a.m. EAC Discussion of Transmission Subcommittee Topics

10:00 to 10:15 a.m. Break

10:00 to 10:45 a.m. Interoperability Panel: Getting All the Devices to Talk to Each Other
Presentation by Gridwise Architecture Council, Erich Gunther, Chairman
10:45 to 11:00 a.m. EAC Discussion of Interoperability Issues and Next Steps for the EAC
11:00 to 11:30 a.m. EAC Smart Grid Subcommittee Work Plan Status
Wanda Reder, EAC Smart Grid Subcommittee Chair
—Leveraging findings from ARRA SGIG/SGDP projects
—Developing recommendations to advance the smart grid industry
11:30 to 11:50 a.m. EAC Discussion and Approval of Smart Grid Subcommittee Work Plan
11:50 a.m. to 12:15 p.m. Prior to Lunch—EAC Members Only
Annual Ethics Briefing for EAC Members, Brian Plesser, Attorney Advisor, DOE Office of General Counsel
12:15 to 1:30 p.m. Lunch on Your Own—Local Restaurants
1:30 to 2:30 p.m. EAC Storage Subcommittee Work Plan Status
Ralph Masiello, EAC Storage Subcommittee Chair
—Status of Report to Congress/Coordination with DOE
○ Detailed discussion of report outline/status
—Large Scale Storage Integration
2:30 to 2:50 p.m. EAC Discussion of Storage Subcommittee Plan for 2012
2:50 to 3:10 p.m. Break
3:10 to 3:30 p.m. Public Comments
Must register at time of check-in
3:30 to 3:45 p.m. Wrap-up of EAC Meeting
Richard Cowart, EAC Chair
3:45 p.m. Adjourn

The meeting agenda may change to accommodate EAC business. For EAC agenda updates, see the EAC Web site at: *http://www.oe.energy.gov/eac.htm.*

Public Participation: The EAC welcomes the attendance of the public at its meetings. Individuals who wish to offer public comments at the EAC meeting may do so on Tuesday, June 12, 2012, but must register at the registration table in advance. Approximately 15 minutes will be reserved for public comments. Time allotted per speaker will depend on the number who wish to speak but is not expected to exceed three minutes. Anyone who is not able to attend the meeting, or for whom the allotted public comments time is insufficient to address pertinent issues with the EAC, is invited to send a written statement to Mr. Matthew Rosenbaum.

You may submit comments, identified by ''*Electricity Advisory Committee Open Meeting,''* by any of the following methods:

• *Mail/Hand Delivery/Courier:* Matthew Rosenbaum, Office of Electricity Delivery and Energy Reliability, U.S. Department of Energy, Forrestal Building, Room 8G–017, 1000 Independence Avenue SW., Washington, DC 20585.

• *Email:* matthew.rosenbaum@hq.doe.gov. Include ''Electricity Advisory Committee Open Meeting'' in the subject line of the message.

• *Federal eRulemaking Portal: http://www.regulations.gov.* Follow the instructions for submitting comments. *Instructions:* All submissions received must include the agency name and identifier. All comments received will be posted without change to *http://www.oe.energy.gov/eac.htm,* including any personal information provided.

• *Docket:* For access to the docket, to read background documents or comments received, go to *http://www.oe.energy.gov/eac.htm.*

The following electronic file formats are acceptable: Microsoft Word (.doc), Corel Word Perfect (.wpd), Adobe Acrobat (.pdf), Rich Text Format (.rtf), plain text (.txt), Microsoft Excel (.xls), and Microsoft PowerPoint (.ppt). If you submit information that you believe to be exempt by law from public disclosure, you must submit one complete copy, as well as one copy from which the information claimed to be exempt by law from public disclosure has been deleted. You must also explain the reasons why you believe the deleted information is exempt from disclosure.

DOE is responsible for the final determination concerning disclosure or nondisclosure of the information and for treating it in accordance with the DOE's Freedom of Information regulations (10 CFR 1004.11).

The EAC will also hold meetings in Washington, DC on October 15–16, 2012. The venue and agenda will be provided in future notices.

Note: Delivery of the U.S. Postal Service mail to DOE may be delayed by several weeks due to security screening. The Department, therefore, encourages those wishing to comment to submit comments electronically by email. If comments are submitted by regular mail, the Department requests that they be accompanied by a CD or diskette containing electronic files of the submission.

Minutes: The minutes of the EAC meeting will be posted on the EAC Web page at *http://energy.gov/oe/services/electricity-advisory-committee-eac.* They can also be obtained by contacting Mr. Matthew Rosenbaum at the address above.

Dated: Issued in Washington, DC, on May 15, 2012.

LaTanya R. Butler,

Acting Deputy Committee Management Officer.

[FR Doc. 2012–12217 Filed 5–18–12; 8:45 am]

BILLING CODE 6450–01–P

DEPARTMENT OF ENERGY

Environmental Management Site-Specific Advisory Board, Oak Ridge Reservation

AGENCY: Department of Energy.

ACTION: Notice of open meeting.

SUMMARY: This notice announces a meeting of the Environmental Management Site-Specific Advisory Board (EM SSAB), Oak Ridge Reservation. The Federal Advisory Committee Act (Pub. L. 92–463, 86 Stat. 770) requires that public notice of this meeting be announced in the **Federal Register**.

DATES: Wednesday, June 13, 2012, 6:00 p.m.

ADDRESSES: Department of Energy Information Center, 1 Science.gov Way, Oak Ridge, Tennessee 37830.

FOR FURTHER INFORMATION CONTACT: Melyssa P. Noe, Federal Coordinator, Department of Energy Oak Ridge Operations Office, P.O. Box 2001, EM–90, Oak Ridge, TN 37831. Phone (865) 241–3315; Fax (865) 576–0956 or email: *noemp@oro.doe.gov* or check the Web site at *www.oakridge.doe.gov/em/ssab.*

SUPPLEMENTARY INFORMATION: *Purpose of the Board:* The purpose of the Board is to make recommendations to DOE–EM and site management in the areas of environmental restoration, waste management, and related activities.

Tentative Agenda: The scheduled topic is an update on the cleanup at Y–12 National Security Complex.

Public Participation: The EM SSAB, Oak Ridge, welcomes the attendance of the public at its advisory committee meetings and will make every effort to accommodate persons with physical disabilities or special needs. If you require special accommodations due to a disability, please contact Melyssa P. Noe at least seven days in advance of the meeting at the phone number listed above. Written statements may be filed with the Board either before or after the meeting. Individuals who wish to make oral statements pertaining to the agenda item should contact Melyssa P. Noe at the address or telephone number listed above. Requests must be received five days prior to the meeting and reasonable provision will be made to include the

presentation in the agenda. The Deputy Designated Federal Officer is empowered to conduct the meeting in a fashion that will facilitate the orderly conduct of business. Individuals wishing to make public comments will be provided a maximum of five minutes to present their comments.

Minutes: Minutes will be available by writing or calling Melyssa P. Noe at the address and phone number listed above. Minutes will also be available at the following Web site: *http://www.oakridge.doe.gov/em/ssab/minutes.htm.*

Issued at Washington, DC, on May 16, 2012.

LaTanya R. Butler,

Acting Deputy Committee Management Officer.

[FR Doc. 2012–12219 Filed 5–18–12; 8:45 am]

BILLING CODE 6450–01–P

DEPARTMENT OF ENERGY

Environmental Management Site-Specific Advisory Board, Portsmouth

AGENCY: Department of Energy (DOE).

ACTION: Notice of open meeting.

SUMMARY: This notice announces a meeting of the Environmental Management Site-Specific Advisory Board (EM SSAB), Portsmouth. The Federal Advisory Committee Act (Pub. L. 92–463, 86 Stat. 770) requires that public notice of this meeting be announced in the **Federal Register**.

DATES: Thursday, June 7, 2012, 6:00 p.m.

ADDRESSES: Ohio State University, Endeavor Center, 1862 Shyville Road, Piketon, Ohio 45661.

FOR FURTHER INFORMATION CONTACT: Joel Bradburne, Deputy Designated Federal Officer, Department of Energy Portsmouth/Paducah Project Office, Post Office Box 700, Piketon, Ohio 45661, (740) 897–3822, *Joel.Bradburne@lex.doe.gov.*

SUPPLEMENTARY INFORMATION:

Purpose of the Board: The purpose of the Board is to make recommendations to DOE–EM and site management in the areas of environmental restoration, waste management and related activities.

Tentative Agenda

- Call to Order, Introductions, Review of Agenda
- Approval of May Minutes
- Deputy Designated Federal Officer's Comments
- Liaisons' Comments
- Presentations:
  - Advanced Technologies and Planning Perspectives, Nate Ames, Director of Nuclear Fabrication Consortium, Edison Welding Institute
  - Process Gas Equipment Breakdown, Greg Simonton, DOE Federal Coordinator
- Administrative Issues
- Subcommittee Updates
- Public Comments
- Final Comments from the Board
- Adjourn

Public Participation: The meeting is open to the public. The EM SSAB, Portsmouth, welcomes the attendance of the public at its advisory committee meetings and will make every effort to accommodate persons with physical disabilities or special needs. If you require special accommodations due to a disability, please contact Joel Bradburne at least seven days in advance of the meeting at the phone number listed above. Written statements may be filed with the Board either before or after the meeting. Individuals who wish to make oral statements pertaining to agenda items should contact Joel Bradburne at the address or telephone number listed above. Requests must be received five days prior to the meeting and reasonable provision will be made to include the presentation in the agenda. The Deputy Designated Federal Officer is empowered to conduct the meeting in a fashion that will facilitate the orderly conduct of business. Individuals wishing to make public comments will be provided a maximum of five minutes to present their comments.

Minutes: Minutes will be available by writing or calling Joel Bradburne at the address and phone number listed above. Minutes will also be available at the following Web site: *http://www.ports-ssab.energy.gov/.*

Dated: Issued at Washington, DC, on May 15, 2012.

LaTanya R. Butler,

Acting Deputy Committee Management Officer.

[FR Doc. 2012–12253 Filed 5–18–12; 8:45 am]

BILLING CODE 6450–01–P

DEPARTMENT OF ENERGY

Federal Energy Regulatory Commission

[Docket No. RM93–11–000]

Revisions to Oil Pipeline Regulations Pursuant to the Energy Policy Act of 1992; Notice of Annual Change in the Producer Price Index for Finished Goods

The Commission's regulations include a methodology for oil pipelines to change their rates through use of an index system that establishes ceiling levels for such rates. The Commission bases the index system, found at 18 CFR 342.3, on the annual change in the Producer Price Index for Finished Goods (PPI–FG), plus two point six five percent (PPI–FG+2.65). The Commission determined in an ''Order Establishing Index For Oil Price Change Ceiling Levels'' issued December 16, 2010, that PPI–FG+2.65 is the appropriate oil pricing index factor for pipelines to use for the five-year period commencing July 1, 2011.[1]

The regulations provide that the Commission will publish annually, an index figure reflecting the final change in the PPI–FG, after the Bureau of Labor Statistics publishes the final PPI–FG in May of each calendar year. The annual average PPI–FG index figures were 179.8 for 2010 and 190.5 for 2011.[2] Thus, the percent change (expressed as a decimal) in the annual average PPI–FG from 2010 to 2011, plus 2.65 percent, is positive 0.086011.[3] Oil pipelines must multiply their July 1, 2011, through June 30, 2012, index ceiling levels by positive 1.086011[4] to compute their index ceiling levels for July 1, 2012, through June 30, 2013, in accordance with 18 CFR 342.3(d). For guidance in calculating the ceiling levels for each 12 month period beginning January 1,

[1] 133 FERC ¶ 61,228 at P 1 (2010).

[2] Bureau of Labor Statistics (BLS) publishes the final figure in mid-May of each year. This figure is publicly available from the Division of Industrial Prices and Price Indexes of the BLS, at (202) 691–7705, and in print in August in Table 1 of the annual data supplement to the BLS publication Producer Price Indexes via the Internet at *http://www.bls.gov/ppi/home.htm.* To obtain the BLS data, scroll down to ''PPI Databases'' and click on ''Top Picks'' of the Commodity Data including stage-of-processing indexes (Producer Price Index—PPI). At the next screen, under the heading ''Producer Price Index/Commodity Data,'' select the first box, ''Finished goods—WPUSOP3000,'' then scroll all the way to the bottom of this screen and click on Retrieve data.

[3] [190.5 − 179.8]/179.8 = 0.059511 + .0265 = 0.086011.

[4] 1 + 0.086011 = 1.086011.

l995,[5] *see Explorer Pipeline Company,* 71 FERC ¶ 61,416 at n.6 (1995).

In addition to publishing the full text of this Notice in the **Federal Register**, the Commission provides all interested persons an opportunity to view and/or print this Notice via the Internet through FERC's Home Page (*http://www.ferc.gov*) and in FERC's Public Reference Room during normal business hours (8:30 a.m. to 5:00 p.m. Eastern time) at 888 First Street NE., Room 2A, Washington, DC 20426. The full text of this Notice is available on FERC's Home Page at the eLibrary link. To access this document in eLibrary, type the docket number excluding the last three digits of this document in the docket number field and follow other directions on the search page.

User assistance is available for eLibrary and other aspects of FERC's Web site during normal business hours. For assistance, please contact the Commission's Online Support at 1–866–208–3676 (toll free) or 202–502–6652 (email at *FERCOnlineSupport@ferc.gov*), or the Public Reference Room at (202) 502–8371, TTY (202) 502–8659. Email the Public Reference Room at *public.referenceroom@ferc.gov.*

Dated: May 15, 2012.

Kimberly D. Bose,

Secretary.

[FR Doc. 2012–12198 Filed 5–18–12; 8:45 am]

BILLING CODE 6717–01–P

DEPARTMENT OF ENERGY

Federal Energy Regulatory Commission

[Docket No. DI12–6–000]

Madison Farms; Notice of Declaration of Intention and Soliciting Comments, Protests, and/or Motions To Intervene

Take notice that the following application has been filed with the Commission and is available for public inspection:

a. *Application Type:* Declaration of Intention.

b. *Docket No.:* DI12–6–000.

c. *Date Filed:* April 18, 2012.

d. *Applicant:* Madison Farms.

e. *Name of Project:* Circle 49 and 50 Hydroelectric Project.

f. *Location:* The proposed Circle 49 and 50 Hydroelectric Project will be located near the town of Echo, Umatilla County, Oregon, affecting T. 3 N, R. 27 E, sec. 17, Willamette Meridian.

g. *Filed Pursuant to:* Section 23(b)(1) of the Federal Power Act, 16 U.S.C. 817(b).

h. *Applicant Contact:* Kent Madison, 29299 Madison Road, Echo, OR 9826; telephone: (541) 376–8107; Fax: (541) 376–8618; email: *www.Kmadison@eoni.com.*

i. *FERC Contact:* Any questions on this notice should be addressed to Henry Ecton, (202) 502–8768, or Email address: *henry.ecton@ferc.gov.*

j. *Deadline for filing comments, protests, and/or motions:* June 15, 2012.

Comments, Motions to Intervene, and Protests may be filed electronically via the Internet. See 18 CFR 385.2001(a)(l)(iii) and the instructions on the Commission's Web site under the ''eFiling'' link. If unable to be filed electronically, documents may be paper-filed. To paper-file, an original and eight copies should be mailed to: Kimberly D. Bose, Secretary, Federal Energy Regulatory Commission, 888 First Street NE., Washington, DC 20426. For more information on how to submit these types of filings, please go to the Commission's Web site located at *http://www.ferc.gov/filing-comments.asp.* Please include the docket number (DI12–6–000) on any comments, protests, and/or motions filed.

k. *Description of Project:* The proposed Circle 49 and 50 Hydroelectric Project will be located on an existing irrigation canal system pipeline, and will consist of a 20-kW turbine generator at Circle 49, and a 24-kW turbine generator located at Circle 50, at pressure discharge valves. The power generated will be used to operate the pumps used for irrigation, supplemented by connection to the Umatilla Electric Cooperative, with a net metering arrangement. Water used in the irrigation system is taken from the Columbia River.

When a Declaration of Intention is filed with the Federal Energy Regulatory Commission, the Federal Power Act requires the Commission to investigate and determine if the interests of interstate or foreign commerce would be affected by the project. The Commission also determines whether or not the project: (1) Would be located on a navigable waterway; (2) would occupy or affect public lands or reservations of the United States; (3) would utilize surplus water or water power from a government dam; or (4) if applicable, has involved or would involve any construction subsequent to 1935 that may have increased or would increase the project's head or generating capacity, or have otherwise significantly modified the project's pre-1935 design or operation.

l. *Locations of the Application:* Copies of this filing are on file with the Commission and are available for public inspection. This filing may be viewed on the web at *http://www.ferc.gov* using the ''eLibrary'' link. Enter the Docket number excluding the last three digits in the docket number field to access the document. You may also register online at *http://www.ferc.gov/docs-filing/esubscription.asp* to be notified via email of new filings and issuances related to this or other pending projects. For assistance, call 1–866–208–3676 or email *FERCOlineSupport@ferc.gov* for TTY, call (202) 502–8659. A copy is also available for inspection and reproduction at the address in item (h) above.

m. Individuals desiring to be included on the Commission's mailing list should so indicate by writing to the Secretary of the Commission.

n. *Comments, Protests, or Motions to Intervene*—Anyone may submit comments, a protest, or a motion to intervene in accordance with the requirements of Rules of Practice and Procedure, 18 CFR 385.210, .211, .214. In determining the appropriate action to take, the Commission will consider all protests or other comments filed, but only those who file a motion to intervene in accordance with the Commission's Rules may become a party to the proceeding. Any comments, protests, or motions to intervene must be received on or before the specified comment date for the particular application.

o. *Filing and Service of Responsive Documents*—All filings must bear in all capital letters the title ''COMMENTS'', ''PROTESTS'', AND/OR ''MOTIONS TO INTERVENE'', as applicable, and the Docket Number of the particular application to which the filing refers. A copy of any Motion to Intervene must also be served upon each representative of the Applicant specified in the particular application.

p. *Agency Comments*—Federal, state, and local agencies are invited to file comments on the described application. A copy of the application may be obtained by agencies directly from the Applicant. If an agency does not file comments within the time specified for filing comments, it will be presumed to have no comments. One copy of an agency's comments must also be sent to the Applicant's representatives.

---

[5] For a listing of all prior multipliers issued by the Commission, see the Commission's Web site, *http://www.ferc.gov/industries/oil/gen-info/pipeline-index.asp.*

Dated: May 15, 2012.

Kimberly D. Bose,

Secretary.

[FR Doc. 2012–12199 Filed 5–18–12; 8:45 am]

BILLING CODE 6717–01–P

DEPARTMENT OF ENERGY

Federal Energy Regulatory Commission

[Project No. 2197–098]

Georgia Power Company; Notice of Application for Amendment of License and Soliciting Comments, Motions To Intervene, and Protests

Take notice that the following hydroelectric application has been filed with the Commission and is available for public inspection:

a. *Application Type:* Non-project use of project lands and waters.

b. *Project No.:* 2197–098.

c. *Date Filed:* January 17, 2012.

d. *Applicant:* Alcoa Power Generating Inc.

e. *Name of Project:* Yadkin Hydroelectric Project.

f. *Location:* The Yadkin Hydroelectric Project is located on the Yadkin River, near High Rock Reservoir in Rowan County, North Carolina.

g. *Filed Pursuant to:* Federal Power Act, 16 U.S.C. 791a–825r.

h. *Applicant Contact:* Mashall Olson, Alcoa Power Generating Inc—Yadkin Division, P.O. Box 576, Badin, NC 28009. (704) 422–5622.

i. *FERC Contact:* Jade Alvey at (202) 502–6864, or email: *jade.alvey@ferc.gov.*

j. *Deadline for filing comments, motions to intervene, and protests:* June 15, 2012.

All documents may be filed electronically via the Internet. See 18 CFR 385.2001(a)(1)(iii) and the instructions on the Commission's Web site at *http://www.ferc.gov/docs-filing/efiling.asp.* Commenters can submit brief comments up to 6,000 characters, without prior registration, using the eComment system at *http://www.ferc.gov/docs-filing/ecomment.asp.* You must include your name and contact information at the end of your comments. For assistance, please contact FERC Online Support at *FERCOnlineSupport@ferc.gov* or toll free at 1–866–208–3676, or for TTY, (202) 502–8659. Although the Commission strongly encourages electronic filing, documents may also be paper-filed. To paper-file, mail an original and seven copies to: Secretary, Federal Energy Regulatory Commission, 888 First Street NE., Washington, DC 20426. Please include the project number (P–2197–098) on any comments, motions, or recommendations filed.

The Commission's Rules of Practice and Procedure require all intervenors filing documents with the Commission to serve a copy of that document on each person whose name appears on the official service list for the project. Further, if an intervenor files comments or documents with the Commission relating to the merits of an issue that may affect the responsibilities of a particular resource agency, they must also serve a copy of the document on that resource agency.

k. *Description of Request:* Alcoa Power Generating Inc. requests Commission approval to grant Alcoa Power Generating Inc. (permittee) a permit, to conduct sand mining using a hydraulic dredge/barge operation, along the Yadkin River as it enters the upper portion of High Rock Reservoir. The mining operation would impact about 51 acres within the project boundary, to include a barge access area and return water discharge.

l. *Locations of the Application:* A copy of the application is available for inspection and reproduction at the Commission's Public Reference Room, located at 888 First Street NE., Room 2A, Washington, DC 20426, or by calling (202) 502–8371. This filing may also be viewed on the Commission's Web site at *http://www.ferc.gov* using the ''eLibrary'' link. Enter the docket number excluding the last three digits in the docket number field to access the document. You may also register online at *http://www.ferc.gov/docs-filing/esubscription.asp* to be notified via email of new filings and issuances related to this or other pending projects. For assistance, call 1–866–208–3676 or email *FERCOnlineSupport@ferc.gov,* for TTY, call (202) 502–8659. A copy is also available for inspection and reproduction at Ameren's shoreline office. Agencies may obtain copies of the application directly from the applicant.

m. Individuals desiring to be included on the Commission's mailing list should so indicate by writing to the Secretary of the Commission.

n. *Comments, Protests, or Motions to Intervene:* Anyone may submit comments, a protest, or a motion to intervene in accordance with the requirements of Rules of Practice and Procedure, 18 CFR 385.210, .211, .214, respectively. In determining the appropriate action to take, the Commission will consider all protests or other comments filed, but only those who file a motion to intervene in accordance with the Commission's Rules may become a party to the proceeding. Any comments, protests, or motions to intervene must be received on or before the specified comment date for the particular application.

o. *Filing and Service of Documents:* Any filing must (1) Bear in all capital letters the title ''COMMENTS'', ''PROTEST'', or ''MOTION TO INTERVENE'' as applicable; (2) set forth in the heading the name of the applicant and the project number of the application to which the filing responds; (3) furnish the name, address, and telephone number of the person commenting, protesting or intervening; and (4) otherwise comply with the requirements of 18 CFR 385.2001 through 385.2005. All comments, motions to intervene, or protests must set forth their evidentiary basis. Any filing made by an intervenor must be accompanied by proof of service on all persons listed in the service list prepared by the Commission in this proceeding, in accordance with 18 CFR 385.2010.

Dated: May 15, 2012.

Kimberly D. Bose,

Secretary.

[FR Doc. 2012–12203 Filed 5–18–12; 8:45 am]

BILLING CODE 6717–01–P

DEPARTMENT OF ENERGY

Federal Energy Regulatory Commission

Combined Notice of Filings #2

Take notice that the Commission received the following electric corporate filings:

Docket Numbers: EC12–99–000.

Applicants: Lowell Cogeneration Company Limited Partnership, Power City Partners, L.P.

Description: Application for Authorization for Disposition of Jurisdictional Facilities and Request for Expedited Action of Lowell Cogeneration Company Limited Partnership, *et al.*

Filed Date: 5/10/12.

Accession Number: 20120510–5075.

Comments Due: 5 p.m. ET 5/31/12.

Take notice that the Commission received the following electric rate filings:

Docket Numbers: ER12–1742–001.

Applicants: International Transmission Company.

Description: Errata Filing to be effective 7/10/2012.

Filed Date: 5/10/12.

Accession Number: 20120510–5064.

Comments Due: 5 p.m. ET 5/31/12.

Docket Numbers: ER12–1755–000.

Applicants: Midwest Independent Transmission System Operator, Inc.
Description: G513 GIA Termination to be effective 7/10/2012.
Filed Date: 5/10/12.
Accession Number: 20120510–5031.
Comments Due: 5 p.m. ET 5/31/12.

Docket Numbers: ER12–1756–000.
Applicants: Wisconsin Public Service Corporation.
Description: WPSC Filing to Update FERC Form 1 References in its Formula Rates to be effective 7/9/2012.
Filed Date: 5/10/12.
Accession Number: 20120510–5035.
Comments Due: 5 p.m. ET 5/31/12.

Docket Numbers: ER12–1757–000.
Applicants: International Transmission Company.
Description: Notice of Succession to be effective 7/12/2012.
Filed Date: 5/10/12.
Accession Number: 20120510–5068.
Comments Due: 5 p.m. ET 5/31/12.

The filings are accessible in the Commission's eLibrary system by clicking on the links or querying the docket number.

Any person desiring to intervene or protest in any of the above proceedings must file in accordance with Rules 211 and 214 of the Commission's Regulations (18 CFR 385.211 and 385.214) on or before 5:00 p.m. Eastern time on the specified comment date. Protests may be considered, but intervention is necessary to become a party to the proceeding.

eFiling is encouraged. More detailed information relating to filing requirements, interventions, protests, service, and qualifying facilities filings can be found at: *http://www.ferc.gov/docs-filing/efiling/filing-req.pdf.* For other information, call (866) 208–3676 (toll free). For TTY, call (202) 502–8659.

Dated: May 10, 2012.

Nathaniel J. Davis, Sr.,

Deputy Secretary.

[FR Doc. 2012–12150 Filed 5–18–12; 8:45 am]

BILLING CODE 6717–01–P

DEPARTMENT OF ENERGY

Federal Energy Regulatory Commission

Combined Notice of Filings

Take notice that the Commission has received the following Natural Gas Pipeline Rate and Refund Report filings:

Filings Instituting Proceedings

Docket Numbers: RP12–730–000.
Applicants: Algonquin Gas Transmission, LLC.
Description: Filed Agreements Tariff Cleanup—Norwich to be effective 6/11/2012.
Filed Date: 5/11/12.
Accession Number: 20120511–5009.
Comments Due: 5 p.m. ET 5/23/12.

Docket Numbers: RP12–731–000.
Applicants: Transcontinental Gas Pipe Line Company, LLC.
Description: New Rate Schedule FTP to be effective 6/11/2012.
Filed Date: 5/11/12.
Accession Number: 20120511–5058.
Comments Due: 5 p.m. ET 5/23/12.

Any person desiring to intervene or protest in any of the above proceedings must file in accordance with Rules 211 and 214 of the Commission's Regulations (18 CFR 385.211 and 385.214) on or before 5 p.m. Eastern timeon the specified comment date. Protests may be considered, but intervention is necessary to become a party to the proceeding.

Filings in Existing Proceedings

Docket Numbers: RP12–313–001
Applicants: Sea Robin Pipeline Company, LLC
Description: Hurricane Surcharge Refund Report to be effective N/A.
Filed Date: 5/10/12
Accession Number: 20120510–5084
Comments Due: 5 p.m. ET 5/22/12

Docket Numbers: RP12–636–001
Applicants: Gulf Crossing Pipeline Company LLC
Description: Compliance Filing in Docket No. RP12–636–000 to be effective 6/1/2012
Filed Date: 5/10/12
Accession Number: 20120510–5022
Comments Due: 5 p.m. ET 5/22/12

Docket Numbers: RP99–106–018
Applicants: TransColorado Gas Transmission Company LLC
Description: Revenue Sharing Report of TransColorado Gas Transmission Company LLC in Docket No. RP99–106.
Filed Date: 5/10/12
Accession Number: 20120510–5097
Comments Due: 5 p.m. ET 5/22/12

Any person desiring to protest in any the above proceedings must file in accordance with Rule 211 of the Commission's Regulations (18 CFR 385.211) on or before 5 p.m. Eastern time on the specified comment date.

The filings are accessible in the Commission's eLibrary system by clicking on the links or querying the docket number.

eFiling is encouraged. More detailed information relating to filing requirements, interventions, protests, and service can be found at: *http://www.ferc.gov/docs-filing/efiling/filing-req.pdf.* For other information, call (866) 208–3676 (toll free). For TTY, call (202) 502–8659.

Dated: May 14, 2012.

Nathaniel J. Davis, Sr.

Deputy Secretary

[FR Doc. 2012–12186 Filed 5–18–12; 8:45 am]

BILLING CODE 6717–01–P

DEPARTMENT OF ENERGY

Federal Energy Regulatory Commission

Combined Notice of Filings #1

Take notice that the Commission received the following electric corporate filings:

Docket Numbers: EC12–101–000.
Applicants: Golden Spread Electric Cooperative, Inc., Denver City Energy Associates, L.P., Great Point Power Denver City LP, LLC, LSP–Denver City, LLC, GPP Investors I, LLC, QUIXX Mustang Station, LLC
Description: Joint Application for Authorization under Section 203 of the Federal Power Act and Request for Expedited Consideration and Waivers of Golden Spread Electric Cooperative, Inc. *et al.*
Filed Date: 5/11/12
Accession Number: 20120511–5224
Comments Due: 5 p.m. ET 6/1/12

Docket Numbers: EC12–102–000.
Applicants: Riverside Energy Center, LLC
Description: Application for Section 203 Authorization of Riverside Energy Center, LLC, *et al.*
Filed Date: 5/11/12
Accession Number: 20120511–5226
Comments Due: 5 p.m. ET 6/1/12

Take notice that the Commission received the following electric rate filings:

Docket Numbers: ER12–397–001.
Applicants: Midwest Independent Transmission System Operator, Inc.
Description: G491 Compliance filing to be effective 11/15/2011.
Filed Date: 5/11/12
Accession Number: 20120511–5158
Comments Due: 5 p.m. ET 6/1/12

Docket Numbers: ER12–1655–000.
Applicants: Lea Power Partners, LLC
Description: Supplemental Notice to Notice of Change in Status of Lea Power Partners, LLC.
Filed Date: 5/11/12
Accession Number: 20120511–5080
Comments Due: 5 p.m. ET 6/1/12

Docket Numbers: ER12–1656–000.
Applicants: Waterside Power, LLC
Description: Supplemental Notice to Notice of Change in Status of Waterside Power, LLC.

Filed Date: 5/11/12
Accession Number: 20120511–5081
Comments Due: 5 p.m. ET 6/1/12

Docket Numbers: ER12–1772–000.
Applicants: Southwest Power Pool, Inc.
Description: Compliance Filing in Orders ER08–1419–003 and ER08–1419–004—Attachment O to be effective 7/26/2010.
Filed Date: 5/11/12
Accession Number: 20120511–5165
Comments Due: 5 p.m. ET 6/1/12

Docket Numbers: ER12–1773–000.
Applicants: Inupiat Energy Marketing, LLC
Description: Initial MBR Application to be effective 5/21/2012.
Filed Date: 5/11/12
Accession Number: 20120511–5176
Comments Due: 5 p.m. ET 6/1/12

Docket Numbers: ER12–1774–000.
Applicants: Midwest Independent Transmission System Operator, Inc.
Description: 05–11–2012 to be effective 7/11/2012.
Filed Date: 5/11/12
Accession Number: 20120511–5181
Comments Due: 5 p.m. ET 6/1/12

Take notice that the Commission received the following electric securities filings:

Docket Numbers: ES12–41–000.
Applicants: ISO New England Inc.
Description: Application of ISO New England Inc. under Section 204 of the Federal Power Act For An Order Authorizing the Issuance of Securities.
Filed Date: 5/11/12
Accession Number: 20120511–5225
Comments Due: 5 p.m. ET 6/1/12

The filings are accessible in the Commission's eLibrary system by clicking on the links or querying the docket number.

Any person desiring to intervene or protest in any of the above proceedings must file in accordance with Rules 211 and 214 of the Commission's Regulations (18 CFR 385.211 and 385.214) on or before 5:00 p.m. Eastern time on the specified comment date. Protests may be considered, but intervention is necessary to become a party to the proceeding.

eFiling is encouraged. More detailed information relating to filing requirements, interventions, protests, service, and qualifying facilities filings can be found at: *http://www.ferc.gov/docs-filing/efiling/filing-req.pdf.* For other information, call (866) 208–3676 (toll free). For TTY, call (202) 502–8659.

Dated: May 14, 2012.

Nathaniel J. Davis, Sr.,

Deputy Secretary.

[FR Doc. 2012–12188 Filed 5–18–12; 8:45 am]

BILLING CODE 6717–01–P

DEPARTMENT OF ENERGY

Federal Energy Regulatory Commission

Combined Notice of Filings #1

Take notice that the Commission received the following electric corporate filings:

Docket Numbers: EC12–98–000.
Applicants: Erie Wind, LLC.
Description: Application for Authorization under Section 203 of the Federal Power Act and Request for Waivers, Confidential Treatment, Expedited Action and Shortened Comment Period of Erie Wind, LLC.
Filed Date: 5/9/12.
Accession Number: 20120509–5096.
Comments Due: 5 p.m. ET 5/30/12.

Take notice that the Commission received the following electric rate filings:

Docket Numbers: ER12–938–000.
Applicants: Pacific Gas and Electric Company.
Description: Compliance Refund Report for CCSF 36th Quarterly Filing to be effective N/A.
Filed Date: 5/9/12.
Accession Number: 20120509–5113.
Comments Due: 5 p.m. ET 5/30/12.

Docket Numbers: ER12–1753–000.
Applicants: Wyoming Colorado Intertie, LLC.
Description: Wyoming Wind and Power Transmission Service Agreement to be effective 7/9/2012.
Filed Date: 5/9/12.
Accession Number: 20120509–5115.
Comments Due: 5 p.m. ET 5/30/12.

Docket Numbers: ER12–1754–000.
Applicants: AmerenEnergy Medina Valley Cogen, LLC.
Description: Notice of Cancellation of AmerenEnergy Medina Valley Cogen, LLC.
Filed Date: 5/9/12.
Accession Number: 20120509–5140.
Comments Due: 5 p.m. ET 5/30/12.

The filings are accessible in the Commission's eLibrary system by clicking on the links or querying the docket number.

Any person desiring to intervene or protest in any of the above proceedings must file in accordance with Rules 211 and 214 of the Commission's Regulations (18 CFR 385.211 and 385.214) on or before 5:00 p.m. Eastern time on the specified comment date. Protests may be considered, but intervention is necessary to become a party to the proceeding.

eFiling is encouraged. More detailed information relating to filing requirements, interventions, protests, service, and qualifying facilities filings can be found at: *http://www.ferc.gov/docs-filing/efiling/filing-req.pdf.* For other information, call (866) 208–3676 (toll free). For TTY, call (202) 502–8659.

Dated: May 10, 2012.

Nathaniel J. Davis, Sr.,

Deputy Secretary.

[FR Doc. 2012–12149 Filed 5–18–12; 8:45 am]

BILLING CODE 6717–01–P

DEPARTMENT OF ENERGY

Federal Energy Regulatory Commission

[Docket No. OR12–14–000]

PBF Holding Company LLC, Toledo Refining Company LLC v. Enbridge Energy, Limited Partnership; Notice of Complaint

Take notice that on May 11, 2012, pursuant to sections 1(6), 3(1), 13(1), 15(1), and 16(1) of the Interstate Commerce Act (ICA); 49 U.S.C. App. 1(6), 3(1), 9, 13(l), 15(l), and 16(1), section 206 of the Rules of Practice and Procedure of Federal Energy Regulatory Commission (Commission), 18 CFR 385.206; and section 343.1(a) of the Commission's Procedural Rules Applicable to Oil Pipeline Proceedings, 18 CFR 343.1(a), PBF Holding Company LLC and Toledo Refining Company LLC (Complainants) collectively filed a formal complaint against Enbridge Energy, Limited Partnership (Respondent) challenging that the procedures and practices of the Respondent in apportioning capacity on its ''Mainline'' crude oil pipeline system constitute an unjust and unreasonable classification and practice and result in an undue and unjust preference for shippers and users of heavy crude oil and undue and unjust discrimination against shippers and users of light crude oil in violation of the ICA, causing substantial ongoing injury to the Complainants.

The Complainants stated that copies of the complaint have been served on the Respondent as listed on the Commission's list of Corporate Officials.

Any person desiring to intervene or to protest this filing must file in accordance with Rules 211 and 214 of the Commission's Rules of Practice and Procedure (18 CFR 385.211, 385.214). Protests will be considered by the Commission in determining the appropriate action to be taken, but will not serve to make protestants parties to the proceeding. Any person wishing to become a party must file a notice of intervention or motion to intervene, as

appropriate. The Respondent's answer and all interventions, or protests must be filed on or before the comment date. The Respondent's answer, motions to intervene, and protests must be served on the Complainants.

The Commission encourages electronic submission of protests and interventions in lieu of paper using the ''eFiling'' link at *http://www.ferc.gov.* Persons unable to file electronically should submit an original and 14 copies of the protest or intervention to the Federal Energy Regulatory Commission, 888 First Street NE., Washington, DC 20426.

This filing is accessible on-line at *http://www.ferc.gov,* using the ''eLibrary'' link and is available for review in the Commission's Public Reference Room in Washington, DC. There is an ''eSubscription'' link on the Web site that enables subscribers to receive email notification when a document is added to a subscribed docket(s). For assistance with any FERC Online service, please email *FERCOnlineSupport@ferc.gov,* or call (866) 208–3676 (toll free). For TTY, call (202) 502–8659.

Comment Date: 5:00 p.m. Eastern Time on June 11, 2012.

Dated: May 15, 2012.

Kimberly D. Bose,

Secretary.

[FR Doc. 2012–12201 Filed 5–18–12; 8:45 am]

BILLING CODE 6717–01–P

DEPARTMENT OF ENERGY

Federal Energy Regulatory Commission

[Docket No. OR12–15–000]

Regency Field Services LLC, v. DCP Black Lake Pipe Holdings, LP; Notice of Complaint

Take notice that on May 14, 2012, pursuant to sections 1(5), 1(6), 3(1), 8, 9, 13(1), 15(1), and 16(1) of the Interstate Commerce Act (ICA), 49 U.S.C. App. 1(5), 1(6), 3(1), 8, 9, 13(1), 15(1), and 16(1), and 18 CFR 343.3(c)(3) and 385.206, Regency Field Services LLC (Regency or Complainant) filed a complaint against DCP Black Lake Pipe Holdings, LP (Black Lake or Respondent) alleging that Black Lake has unlawfully and in an unjust and unreasonable manner assessed off-specification penalties against Regency associated with the transportation of Natural Gas Liquids pursuant to Rule 5 of Black Lake's Rules and Regulations tariff (Tariff No. 79.1.0), filed with the Commission on May 26, 2011 in Docket No. IS11–399–000.

As Black Lake does not list contact persons on the Commission's list of Corporate Officials, Regency certifies that copies of the complaint were served on the persons listed as the Issuer and Compiler of Black Lake's Tariff No. 79.1.0.

Any person desiring to intervene or to protest this filing must file in accordance with Rules 211 and 214 of the Commission's Rules of Practice and Procedure (18 CFR 385.211, 385.214). Protests will be considered by the Commission in determining the appropriate action to be taken, but will not serve to make protestants parties to the proceeding. Any person wishing to become a party must file a notice of intervention or motion to intervene, as appropriate. The Respondent's answer and all interventions, or protests must be filed on or before the comment date. The Respondent's answer, motions to intervene, and protests must be served on the Complainant.

The Commission encourages electronic submission of protests and interventions in lieu of paper using the ''eFiling'' link at *http://www.ferc.gov.* Persons unable to file electronically should submit an original and 14 copies of the protest or intervention to the Federal Energy Regulatory Commission, 888 First Street NE., Washington, DC 20426.

This filing is accessible on-line at *http://www.ferc.gov,* using the ''eLibrary'' link and is available for review in the Commission's Public Reference Room in Washington, DC. There is an ''eSubscription'' link on the Web site that enables subscribers to receive email notification when a document is added to a subscribed docket(s). For assistance with any FERC Online service, please email *FERCOnlineSupport@ferc.gov,* or call (866) 208–3676 (toll free). For TTY, call (202) 502–8659.

Comment Date: 5:00 p.m. Eastern Time on June 13, 2012.

Dated: May 15, 2012.

Kimberly D. Bose,

Secretary.

[FR Doc. 2012–12202 Filed 5–18–12; 8:45 am]

BILLING CODE 6717–01–P

DEPARTMENT OF ENERGY

Federal Energy Regulatory Commission

[Docket No. EL12–69–000]

Primary Power, LLC v. PJM Interconnection, LLC; Notice of Complaint

Take notice that on May 14, 2012, pursuant to section 206 of the Rules and Practice and Procedure of the Federal Energy Regulatory Commission (Commission), 18 CFR 385.206 and sections 206 and 306 of the Federal Power Act, 16 U.S.C. 824(e) and 825(e), Primary Power, LLC (Complainant) filed a formal complaint against PJM Interconnection, LLC (PJM or Respondent) for the Respondent's failure to designate the Complainant to construct, own, and finance two static VAR compensator (''SVC'') projects sponsored by the Complainant that have been included in the PJM Regional Transmission Expansion Plan. The Complainant requests that the Commission grant emergency, interim relief by directing PJM and the Incumbent Transmission Owners not to commence construction of the Primary Power SVC Projects while this Complaint is pending before the Commission.

The Complainant states that a copy of the Complaint has been served on the contact for the Respondent as listed on the Commission list of Corporate Officials.

Any person desiring to intervene or to protest this filing must file in accordance with Rules 211 and 214 of the Commission's Rules of Practice and Procedure (18 CFR 385.211, 385.214). Protests will be considered by the Commission in determining the appropriate action to be taken, but will not serve to make protestants parties to the proceeding. Any person wishing to become a party must file a notice of intervention or motion to intervene, as appropriate. The Respondent's answer and all interventions, or protests must be filed on or before the comment date. The Respondent's answer, motions to intervene, and protests must be served on the Complainants.

The Commission encourages electronic submission of protests and interventions in lieu of paper using the ''eFiling'' link at *http://www.ferc.gov.* Persons unable to file electronically should submit an original and 14 copies of the protest or intervention to the Federal Energy Regulatory Commission, 888 First Street NE., Washington, DC 20426.

This filing is accessible on-line at *http://www.ferc.gov,* using the ''eLibrary'' link and is available for review in the Commission's Public Reference Room in Washington, DC. There is an ''eSubscription'' link on the Web site that enables subscribers to receive email notification when a document is added to a subscribed docket(s). For assistance with any FERC Online service, please email *FERCOnlineSupport@ferc.gov,* or call (866) 208–3676 (toll free). For TTY, call (202) 502–8659.

Comment Date: 5:00 p.m. Eastern Time on June 4, 2012.

Dated: May 15, 2012.

Kimberly D. Bose,

Secretary.

[FR Doc. 2012–12200 Filed 5–18–12; 8:45 am]

BILLING CODE 6717–01–P

DEPARTMENT OF ENERGY

Federal Energy Regulatory Commission

Notice of Commission Staff Attendance

The Federal Energy Regulatory Commission hereby gives notice that members of the Commission's staff may attend the following meetings related to the transmission planning activities of the PJM Interconnection, L.L.C. (PJM):

Combined PJM Regional Transmission Planning Task Force/PJM Interconnection Process Senior Task Force

May 21, 2012, 9:30 a.m.–3:00 p.m., Local Time
June 8, 2012, 9:30 a.m.–3:00 p.m., Local Time
June 29, 2012, 9:30 a.m.–3:00 p.m., Local Time
July 19, 2012, 9:30 a.m.–3:00 p.m., Local Time

The above-referenced meetings will be held at: The Chase Center on the Riverfront, Wilmington, DE, or The PJM Conference & Training Center, Norristown, PA.

The above-referenced meetings are open to stakeholders.

Further information may be found at *www.pjm.com.*

The discussions at the meeting described above may address matters at issue in the following proceedings:

Docket No. EL05–121, *PJM Interconnection, L.L.C.*
Docket No. ER06–456, ER06–954, ER06–1271, ER07–424, ER06–880, EL07–57, ER07–1186, ER08–229, ER08–1065, ER09–497, and ER10–268, *PJM Interconnection, L.L.C.*
Docket No. ER10–253 and EL10–14, *Primary Power, L.L.C.*
Docket No. EL10–52, *Central Transmission, LLC* v. *PJM Interconnection, L.L.C.*
Docket No. ER11–4070, *RITELine Indiana et. al.*
Docket No. ER11–2875 and EL11–20, *PJM Interconnection, L.L.C.*
Docket No. ER09–1256, *Potomac-Appalachian Transmission Highline, L.L.C.*
Docket No. ER09–1589, *FirstEnergy Service Company*
Docket No. EL11–56, *FirstEnergy Service Company*
Docket No. ER11–1844, *Midwest Independent Transmission System Operator, Inc.*
Docket No. ER12–718, *New York Independent System Operator, Inc.*
Docket No. ER12–1177, *PJM Interconnection, L.L.C.*
Docket No. ER12–1178, *PJM Interconnection, L.L.C.*
Docket No. ER12–1693, *PJM Interconnection, L.L.C.*

For more information, contact Jonathan Fernandez, Office of Energy Market Regulation, Federal Energy Regulatory Commission at (202) 502–6604 or *jonathan.fernandez@ferc.gov.*

Dated: May 11, 2012.

Nathaniel J. Davis, Sr.,

Deputy Secretary.

[FR Doc. 2012–12148 Filed 5–18–12; 8:45 am]

BILLING CODE 6717–01–P

DEPARTMENT OF ENERGY

Federal Energy Regulatory Commission

Notice of Commission Staff Attendance

The Federal Energy Regulatory Commission (Commission) hereby gives notice that members of the Commission's staff may attend the following meeting related to the transmission planning activities of the Southwest Power Pool, Inc. (SPP):

Strategic Planning Committee Task Force on Order 1000

May 18, 2012, 8:00 a.m.–3 p.m. CDT.

The above-referenced meeting will be held at: AEP Offices, 1201 Elm Street, 8th Floor, Dallas, TX 75201.

The above-referenced meeting is open to stakeholders.

Further information may be found at *www.spp.org.*

The discussions at the meetings described above may address matters at issue in the following proceedings:

Docket No. ER09–35–001, *Tallgrass Transmission, LLC*
Docket No. ER09–36–001, *Prairie Wind Transmission, LLC*
Docket No. ER09–548–001, *ITC Great Plains, LLC*
Docket No. ER11–4105–000, *Southwest Power Pool, Inc.*
Docket No. EL11–34–001, *Midwest Independent Transmission System Operator, Inc.*
Docket No. ER11–3967–002, *Southwest Power Pool, Inc.*
Docket No. ER11–3967–003, *Southwest Power Pool, Inc.*
Docket No. ER12–1179–000, *Southwest Power Pool, Inc.*
Docket No. ER12–1415–000, *Southwest Power Pool, Inc.*
Docket No. ER12–1460–000, *Southwest Power Pool, Inc.*
Docket No. ER12–1610–000, *Southwest Power Pool, Inc.*

For more information, contact Luciano Lima, Office of Energy Markets Regulation, Federal Energy Regulatory Commission at (202) 502–6210 or *luciano.lima@ferc.gov.*

Dated: May 15, 2012.

Nathaniel J. Davis, Sr.,

Deputy Secretary.

[FR Doc. 2012–12187 Filed 5–18–12; 8:45 am]

BILLING CODE 6717–01–P

FEDERAL DEPOSIT INSURANCE CORPORATION

FDIC Advisory Committee on Community Banking; Notice of Meeting

AGENCY: Federal Deposit Insurance Corporation (FDIC).

ACTION: Notice of Open Meeting.

SUMMARY: In accordance with the Federal Advisory Committee Act, notice is hereby given of a meeting of the FDIC Advisory Committee on Community Banking, which will be held in Washington, DC. The Advisory Committee will provide advice and recommendations on a broad range of policy issues that have particular impact on small community banks throughout the United States and the local communities they serve, with a focus on rural areas.

DATES: Tuesday, June 5, 2012, from 8:30 a.m. to 3:00 p.m.

ADDRESSES: The meeting will be held in the FDIC Board Room on the sixth floor of the FDIC Building located at 550 17th Street NW., Washington, DC

FOR FURTHER INFORMATION CONTACT: Requests for further information concerning the meeting may be directed to Mr. Robert E. Feldman, Committee Management Officer of the FDIC, at (202) 898–7043.

SUPPLEMENTARY INFORMATION:

Agenda: The agenda will include a discussion of current issues affecting community banking. The agenda is subject to change. Any changes to the

agenda will be announced at the beginning of the meeting.

Type of Meeting: The meeting will be open to the public, limited only by the space available on a first-come, first-served basis. For security reasons, members of the public will be subject to security screening procedures and must present a valid photo identification to enter the building. The FDIC will provide attendees with auxiliary aids (*e.g.,* sign language interpretation) required for this meeting. Those attendees needing such assistance should call (703) 562–6067 (Voice or TTY) at least two days before the meeting to make necessary arrangements. Written statements may be filed with the committee before or after the meeting. This Community Banking Advisory Committee meeting will be Web cast live via the Internet at *http://www.vodium.com/goto/fdic/communitybanking.asp.* This service is free and available to anyone with the following systems requirements: *http://www.vodium.com/home/sysreq.html.* Adobe Flash Player is required to view these presentations. The latest version of Adobe Flash Player can be downloaded at *http://www.adobe.com/shockwave/download/download.cgi?P1_Prod_Version=ShockwaveFlash.* Installation questions or troubleshooting help can be found at the same link. For optimal viewing, a high speed internet connection is recommended. The Community Banking meeting videos are made available on-demand approximately two weeks after the event.

Federal Deposit Insurance Corporation.

Dated: May 16, 2012.

Robert E. Feldman,

Committee Management Officer.

[FR Doc. 2012–12185 Filed 5–18–12; 8:45 am]

BILLING CODE 6714–01–P

FEDERAL DEPOSIT INSURANCE CORPORATION

Notice to All Interested Parties of the Termination of the Receivership of 10003, Douglass National Bank, Kansas City, MO

Notice is hereby given that the Federal Deposit Insurance Corporation (''FDIC'') as Receiver for Douglass National Bank, (''the Receiver'') intends to terminate its receivership for said institution. The FDIC was appointed receiver of Douglass National Bank on January 25, 2008. The liquidation of the receivership assets has been completed. To the extent permitted by available funds and in accordance with law, the Receiver will be making a final dividend payment to proven creditors.

Based upon the foregoing, the Receiver has determined that the continued existence of the receivership will serve no useful purpose. Consequently, notice is given that the receivership shall be terminated, to be effective no sooner than thirty days after the date of this Notice. If any person wishes to comment concerning the termination of the receivership, such comment must be made in writing and sent within thirty days of the date of this Notice to: Federal Deposit Insurance Corporation, Division of Resolutions and Receiverships, Attention: Receivership Oversight Department 8.1, 1601 Bryan Street, Dallas, TX 75201.

No comments concerning the termination of this receivership will be considered which are not sent within this time frame.

Federal Deposit Insurance Corporation.

Dated: May 15, 2012.

Robert E. Feldman,

Executive Secretary.

[FR Doc. 2012–12190 Filed 5–18–12; 8:45 am]

BILLING CODE 6714–01–P

FEDERAL RESERVE SYSTEM

Change in Bank Control Notices; Acquisitions of Shares of a Bank or Bank Holding Company

The notificants listed below have applied under the Change in Bank Control Act (12 U.S.C. 1817(j)) and § 225.41 of the Board's Regulation Y (12 CFR 225.41) to acquire shares of a bank or bank holding company. The factors that are considered in acting on the notices are set forth in paragraph 7 of the Act (12 U.S.C. 1817(j)(7)).

The notices are available for immediate inspection at the Federal Reserve Bank indicated. The notices also will be available for inspection at the offices of the Board of Governors. Interested persons may express their views in writing to the Reserve Bank indicated for that notice or to the offices of the Board of Governors. Comments must be received not later than June 5, 2012.

A. Federal Reserve Bank of Chicago (Colette A. Fried, Assistant Vice President) 230 South LaSalle Street, Chicago, Illinois 60690–1414:

1. *Midred Stanley,* Searsboro, Iowa, as trustee of the Warren Stanley Trust; to retain voting shares of First State Bank Holding Company and thereby indirectly retain voting shares of First State Bank, both in Lynnville, Iowa.

Board of Governors of the Federal Reserve System, May 16, 2012.

Robert deV. Frierson,

Deputy Secretary of the Board.

[FR Doc. 2012–12194 Filed 5–18–12; 8:45 am]

BILLING CODE 6210–01–P

DEPARTMENT OF HEALTH AND HUMAN SERVICES

Office of the Secretary

Office of the Assistant Secretary for Health, Statement of Organization, Functions, and Delegations of Authority

Part A, Office of the Secretary, statement of Organization, Function, and Delegation of Authority for the U.S. Department of Health and Human Services is being amended at Chapter AC, Office of the Assistant Secretary for Health (OASH), as last amended at 69 FR 660–661, dated January 6, 2004; 72 FR 58095–6, dated October 12, 2007; and most recently at 75 FR 53304–05, dated August 31, 2010. The amendment reflects the consolidation and realignment of personnel oversight, administration and management functions and responsibilities for the Office of the Assistant Secretary for Health's Immediate Office. The changes are as follows:

I. Under Chapter AC, Section AC.20 Functions, delete Paragraph A, ''The Immediate Office (ACA),'' in its entirety and replace with the following:

A. The Immediate Office (ACA) 75 FR 53304–05, Aug. 31, 2010

(1) Provides direction to program offices within OASH; (2) Provides oversight and direction to the Regional Health Administrators (I–X) and their associated staff; (3) Provides advice to assure that the Department conducts broad based public health assessments designed to better define public health challenges and to design solutions to those problems; assists other components within the Department in anticipating future public health issues and problems, and provides assistance to ensure that the Department designs and implements appropriate approaches, interventions, and evaluations, to maintain, sustain, and improve the health of the Nation; (4) At the direction of the Secretary, provides assistance in leading and managing the implementation and coordination of Secretarial decisions for Public Health Service (PHS) Operating Divisions (OPDIVs), and for that purpose, draws on Staff Divisions (STAFFDIVs) and other organizational units for assistance in regard to legislation, budget, communications, and policy analysis; (5) Provides advice to the Secretary and senior Department officials on budget and legislative issues of the PHS OPDIVs; (6) Works in conjunction with the Assistant Secretary for Planning and

Evaluation on matters of health science policy analysis and development; (7) Provides a focus for leadership on matters including recommendations for policy on population-based public health, science and public health infrastructure; and the Secretary's direction leads and/or coordinates initiatives that cut across agencies and OPDIVs; (8) Works in conjunction with the Department's PHS OPDIVs, and others, in building and promoting relationships among and between State and local health departments, academic institutions, professional and constituency organizations (9) Communicates and interacts with national and international professional and constituency organizations on matters of public health and science; (10) Manages the vaccine and immunization related activities for the Secretary; (11) Provides leadership and coordinates public health activities that addresses health disparities related to sexual orientation; (12) Responsible for management and oversight of human research subjects protections functions and related activities where research involves human subjects; (13) Proposes findings of research misconduct and administrative actions in response to allegations of research misconduct involving research conducted or supported by the PHS OPDIVs, including reversal of an institution's no misconduct finding or opening of a new investigation; (14) Provides administrative and management support on bioethical issues; (15) Provides support for the Office of the Surgeon General (OSG) in the exercise of statutory requirements and assigned activities as the Department's liaison for military and veterans issues and works with veterans associations and organizations to bring focus on the health needs of veterans and military families; (16) Through the OSG directs and manages the PHS Commissioned Corps, which includes a cadre of health professionals, and the associated personnel systems in support of the missions of the Department and public health activities of non-HHS agencies in which officers are assigned or detailed to, and provides oversight and direction for officer assignments and professional development; and (17) Provides policy, related administrative management, oversight, and routinely measure the effectiveness of the Commissioned Corps.

II. Delegations of Authority. Pending further re-delegation, Directives or orders made by the Secretary, or the Assistant Secretary for Health, all delegations and re-delegations of authority made to officials and employees of the affected organizational component will continue in effect pending further re-delegations, provided they are consistent with this reorganization.

Dated: December 27, 2011.

Kathleen Sebelius,

Secretary.

[FR Doc. 2012–12172 Filed 5–18–12; 8:45 am]

BILLING CODE 4150–42–P

DEPARTMENT OF HEALTH AND HUMAN SERVICES

Office of the Secretary

Office of the Assistant Secretary for Health, Statement of Organization, Functions, and Delegations of Authority

Part A, Office of the Secretary, Statement of Organization, Function, and Delegation of Authority for the U.S. Department of Health and Human Services is being amended at Chapter AC, Office of the Assistant Secretary for Health (OASH), as last amended at 72 FR 58095–96, dated October 12, 2007; 69 FR 660–661, dated January 6, 2004; 68 FR 70507–10, dated December 18, 2003; 67 FR 71568–70, dated December 2, 2002; and most recently at 75 FR 53304–05, dated August 31, 2010. The amendment reflects the realignment of personnel oversight, administration and management functions for the U.S. Public Health Service (PHS) Commissioned Corps in the OASH. Specifically, it realigns these functions in the Office of the Surgeon General (ACM) and abolishes the Office of Commissioned Corps Force Management (ACQ). The changes are as follows:

I. Under Part A, Chapter AC, Office of the Assistant Secretary for Health, make the following changes:

A. Under Section AC.10 Organization, delete ''L. Office of Commissioned Corps Force Management (ACQ),'' in its entirety.

B. Under Section AC.20, Functions, delete Paragraph ''I. Office of Surgeon General (ACM),'' in its entirety and replace with the following:

I. Office of the Surgeon General (ACM)

Section ACM.00 Mission: The Office of the Surgeon General (OSG) is under the direction of the Surgeon General (SG) of the United States Public Health Service (PHS), who reports to the Assistant Secretary for Health (ASH) and provides staff support for: (1) Assuring day-to-day management of the PHS Commissioned Corps' operations, training, force readiness, and field command of deployments; (2) Issuing warnings to the public on identified health hazards; (3) Reviewing of the particulars of Department of Defense (DoD) plans for transportation, open air testing and disposal of lethal chemicals or biological warfare agents with respect to any hazards to public health and safety such transportation, testing, or disposal may pose and in recommending precautions necessary to protect the public health and safety (50 U.S.C. 1512 (2) & (3)); (4) Communicating with professional societies to receive, solicit, and channel concerns regarding health policy on behalf of the ASH; (5) Maintaining liaison with the Surgeons Generals of the Military Departments and the Under Secretary for Health of the Department of Veterans Affairs; (6) Representing PHS at national and international health and professional meetings to interpret PHS missions, policy, organizational responsibilities and programs, as assigned; (7) Maintaining and overseeing the activities of the Volunteer Medical Reserve Corps program (42 U.S.C. 300hh–15; (8) Providing liaison with governmental and non-governmental organizations on matters pertaining to military and veterans affairs. The Office provides staff support for: (9) Activities relating to membership on the Boards of Regents of the Uniformed Services University of the Health Sciences (per 10 U.S.C. 2113a(a)(3)) and other such positions as are authorized by law, further OASH's programmatic interests, and comply with Federal ethics, laws and regulations.

Section ACM.10 Organization: The OSG is comprised of the following components:

- Immediate Office of the Surgeon General (ACM)
- Division of Science and Communications (ACM1)
- Division of Commissioned Corps Personnel & Readiness (ACM2)
- Division of the Civilian Volunteer Medical Reserve Corps (ACM5)
- Division of Systems Integration (ACM6)

Section ACM.20 Functions:

(a) Immediate Office of the Surgeon General (ACM): (1) Advises the ASH on matters relating to protecting and advancing the public health of the Nation; (2) Manages special deployments that address Presidential and Secretarial initiatives directed toward resolving critical public health problems; (3) Serves, as requested, as the spokesperson on behalf of the Secretary and the ASH, addressing the quality of public health practice on the Nation; (4) Provides supervision of activities relating to the day-to-day management of operations, training, force readiness, and deployment of officers of the PHS Commissioned Corps; (5) Provides advice to the ASH on the policies and implementation related to the appointment, promotion, assimilation, recognition, professional development, retirement, and other matters required for the efficient management of the Commissioned Corps; (6) Provides liaison with

governmental and non-governmental organizations on matters pertaining to military and veterans affairs; (7) Directs and oversees internal office administrative operations (including proposing office budgets); and (8) Convenes periodic meetings of the Assistant Surgeon Generals (flag officers) to obtain senior level advice concerning the management of Corps' operations.

(b) Division of Science and Communications (ACM1): (1) Coordinates activities to plan, develop, introduce and evaluate Surgeon General's Reports, Call to Action, workshops, and other authoritative statements and communications of the SG; (2) Advises the SG on science, data, evidence pertaining to population based public health and the furtherance of public health priorities; (3) Represents the SG in efforts to coordinate federal public health activities with similar activities in the States and local areas, as assigned; (4) Coordinates and is responsible for the preparation of SG correspondence, speeches and communications, as assigned; (5) Represents the SG at conferences, symposia, and community events; (6) Coordinates the receipt of senior-level advice and input from the Chief Professional Officers, the Surgeon General's Professional Advisory Council, and category-based Professional Advisory Committees, and conveys such advice and input to the SG; and (7) Provides administrative and management support to Public Health Reports.

(c) Division of Commissioned Corps Personnel and Readiness (ACM2) includes the following components:

- Immediate Office of the Director (ACM21)
- Recruitment Branch (ACM22)
- Assignments & Career Management Branch (ACM23)
- Ready Reserve Affairs Branch (ACM24)

1. Immediate Office of the Director (ACM21). (1) Provides overall management of Commissioned Corps personnel including active duty Regular Corps, Ready Reservists and of those issues and PHS processes pertinent to retired Corps officers; (2) Develops, issues, implements and maintains all personnel policy issuances and directives related to Corps operations, personnel, training, readiness, assignment, deployment, promotion, and retirement (including publication of such policy in the electronic Commissioned Corps Issuance System (eCCIS)); (3) Manages the process for disciplinary actions and decisions involving Corps officers; (4) Ensures the appropriate exercise of delegated Commissioned Corps authorities and responsibilities; (5) Establishes precepts for appointment, promotion, assimilation, retirement, fitness for duty, awards and commendations, discipline, grievance, and other such matters; (6) With respect to Board of Inquiry (BOI) disciplinary proceedings, ensures documentation of board proceedings, preparation of correspondence to applicants and officers, timely and accurate advice and assistance to Board members and other support as required; (7) Conducts force planning, including working with agencies, and advises OSG and ASH on Commissioned Corps strategic long-term readiness planning; (8) Maintains liaison with all other relevant Federal Services as appropriate, including with components of the Departments of Defense and Veterans Affairs; (9) Coordinates as appropriate to seek Departmental legal advice, assistance, and legislative support; (10) Advises the OSG on mission nature, size, duration and usage of Regular Corps and Ready Reserve officers; (11) Serves as a central point of contact and prepares necessary communications for all Corps Agency Liaison Offices; (12) Oversees the determination of fitness-for-duty and disability evaluations; administers the Servicemembers' Group Life Insurance and Traumatic Serviceman's Group Life Insurance Programs; and oversees Line of Duty determinations of the evaluation and issuance of medical waivers; (13) Serve as the principal advisor to the SG on activities and policy related to preparedness, Corps activation, training, deployment operations and total force fitness of the Corps; (14) Manages the Corps readiness and response activities to include establishing, maintaining and ensuring compliance with force readiness standards; ensuring that members of the Corps are trained, equipped and otherwise prepared to fulfill their public health and emergency response roles; and managing the timely, effective and appropriate response to urgent or emergency public health care needs; and (15) Conducts after action assessments and evaluations for the SG and ASH pertaining to the use of the Corps for deployment and other non-routine use of officers.

2. Recruitment Branch (ACM22).

(1) Implements programs to recruit new health professionals to the Regular and Ready Reserve Corps components, including the management of an Associate Recruiter Program; and (2) Develops recruitment strategies, programs, materials, and other resource to market and/or promote the use of the Corps for specific programs.

3. Assignments & Career Management Branch (ACM23).

(1) Addresses short- and long-term force management of Corps officers by assessing placement requirements in conventional and emergency response assignments, including the issuance of personnel orders; (2) Provides force management by identifying and categorizing types of assignments for which Regular and Ready Reserve Corps officers are required; (3) Develops, evaluates and grades personnel billets using the Commissioned Corps Billet Management System to assure that assignments match officer profiles to the requirements identified in the position billet; (4) Implements, manages, and monitors approved blanket personnel agreements and individual details to non-HHS governmental and non-governmental organizations; (5) Implements and administers Corps officer training, leadership, and career development programs and provides individual career counseling, pre-retirement, death benefit, and survivor benefit counseling; (6) Coordinates the Commissioned Officers Student Training Extern Program (COSTEP); (7) Establishes and monitors Commissioned Corps officer training and education requirements to ensures compliance; (8) Develops career development guidelines and materials to Regular and Ready Reserve Corps officers; (9) Ensures compliance and periodic evaluation of professional credentialing, licensing, and other regulatory compliance of Regular and Ready Reserve Corps officers; (10) Conducts periodic officer personnel reviews and performance evaluations to assure that Corps standards are maintained; and (11) Maintains the official Officer Personnel Folders (OPFs) and records for Regular and Ready Reserve Corps, excluding health (medical/dental/mental health) records.

4. Ready Reserve Affairs Branch (AMC24). (1) Advises the SG on activities related to the preparedness and activation of the Corps' Ready Reserve personnel assets; (2) Develops and maintains Ready Reserve components or assets, except for officers assigned for extended active duty periods; and (3) Conducts force management planning of all elements of the Ready Reserve assets and recommends personnel policy issuance to support the mission and goals of the Corps' Ready Reserve.

(d) Division of the Civilian Volunteer Medical Reserve Corps (ACM5): (1) Serves as the principal advisor to the SG and the ASH on Volunteer Medical Reserve Corps activities; (2) Supports local efforts to establish, implement,

and sustain the Medical Reserve Corps (MRC) units nationwide; (3) Maintains close liaison with the Assistant Secretary for Preparedness and Response (ASPR) regarding MRC policy, budget, and operations; (4) Provides national leadership and coordination of the MRC program; (5) Promotes awareness and understanding of MRC units' critical role in communities across the Nation; (6) Enhances the capacity of MRC units to achieve their missions, through technical assistance and information sharing, as well as contract and grants management; and (7) Supports efforts to utilize willing, able and approved MRC members, as needed in a Federal Response.

(e) Division of Systems Integration (ACM6). (1) Coordinates the application of information technology and support for the execution of OSG activities in accordance with the policies and direction of the Office of the Secretary's Chief of Information Office (OCIO) under the Assistant Secretary for Administration (ASA); (2) Oversees information technology and systems to support recruitment, personnel operations and support, training, mobilization, deployment, and other Commissioned Corps system requirements including updates to the SG and the ASH on the migration to and implementation of systems provided by entities with expertise in uniformed services (e.g., the U.S. Coast Guard Direct Access system and TRICARE); and (3) Assures that system migration plans contain appropriately time framed goals, objectives, and metrics.

C. Under Section AC.20, Functions, delete Section ''L. Office of Commissioned Corps Force Management (ACQ)'' in its entirety.

II. Delegations of Authority. Pending further re-delegation, Directives or orders made by the Secretary, ASH, or Surgeon General, all delegations and re-delegations of authority made to officials and employees of the affected organizational component will continue in effect pending further re-delegations, provided they are consistent with this reorganization.

Dated: December 27, 2011.

Kathleen Sebelius,

Secretary.

Editorial Note: This document was received at the Office of the Federal Register on May 15, 2012.

[FR Doc. 2012–12173 Filed 5–18–12; 8:45 am]

BILLING CODE 4150–42–P

DEPARTMENT OF HEALTH AND HUMAN SERVICES

Agency for Healthcare Research and Quality

Agency Information Collection Activities: Proposed Collection; Comment Request

AGENCY: Agency for Healthcare Research and Quality, HHS.

ACTION: Notice.

SUMMARY: This notice announces the intention of the Agency for Healthcare Research and Quality (AHRQ) to request that the Office of Management and Budget (OMB) approve the proposed information collection project: ''Demonstration of a Health Literacy Universal Precautions Toolkit.'' In accordance with the Paperwork Reduction Act, 44 U.S.C. 3501–3521, AHRQ invites the public to comment on this proposed information collection.

This proposed information collection was previously published in the **Federal Register** on March 9th, 2012 and allowed 60 days for public comment. No substantive comments were received. The purpose of this notice is to allow an additional 30 days for public comment.

DATES: Comments on this notice must be received by June 20, 2012.

ADDRESSES: Written comments should be submitted to: AHRQ's OMB Desk Officer by fax at (202) 395–6974 (attention: AHRQ's desk officer) or by email at *OIRA_submission@omb.eop.gov* (attention: AHRQ's desk officer).

Copies of the proposed collection plans, data collection instruments, and specific details on the estimated burden can be obtained from the AHRQ Reports Clearance Officer.

FOR FURTHER INFORMATION CONTACT: Doris Lefkowitz, AHRQ Reports Clearance Officer, (301) 427–1477, or by email at *doris.lefkowitz@AHRQ.hhs.gov.*

SUPPLEMENTARY INFORMATION:

Proposed Project

Demonstration of Health Literacy Universal Precautions Toolkit

A goal of Healthy People 2020 is to increase Americans' health literacy, defined as, ''the degree to which individuals have the capacity to obtain, process, and understand basic health information and services needed to make appropriate health decisions.'' The effects of limited literacy are numerous and serious, including medication errors resulting from patients' inability to read labels; underuse of preventive measures such as Pap smears and vaccines; poor self-management of conditions such as asthma and diabetes; and higher rates of hospitalization and longer hospital stays.

According to the 2003 National Assessment of Adult Literacy (NAAL), more than one-third of Americans—77 million people—have limited health literacy. Although some adults are more likely than others to have difficulty understanding and acting upon health information (e.g., minority Americans, elderly), providers cannot tell by looking which patients have limited health literacy. Experts recommend that providers assume all patients may have difficulty understanding health-related information. Known as adopting ''health literacy universal precautions,'' providers create an environment in which all patients benefit from clear communication.

AHRQ contracted with the University of North Carolina at Chapel Hill to develop the Health Literacy Universal Precautions Toolkit to help primary care practices ensure that systems are in place to promote better understanding of health-related information by all patients. As part of Toolkit development, testing of a ''prototype Toolkit'' was conducted in eight primary care practices over an eight-week period. Testing provided important information about implementation and resulted in refinement of the Toolkit, which AHRQ made publically available in Spring 2010. At this time, the Toolkit includes 20 tools to prepare practices for health literacy-related quality improvement activities and to guide them in improving their performance related to four domains: (1) Improving spoken communication with patients, (2) improving written communication with patients, (3) enhancing patient self-management and empowerment, and (4) linking patients to supportive systems in the community. The tools included in the Health Literacy Universal Precautions Toolkit are listed below:

Tools to Start on the Path to Improvement

Tool 1: Form a Team
Tool 2: Assess Your Practice
Tool 3: Raise Awareness

Tools to Improve Spoken Communication

Tool 4: Tips for Communicating Clearly
Tool 5: The Teach-Back Method
Tool 6: Follow up with Patients
Tool 7: Telephone Considerations
Tool 8: Brown Bag Medication Review
Tool 9: How to Address Language Differences
Tool 10: Culture and Other Considerations

Tools to Improve Written Communication

Tool 11: Design Easy-to-Read Material
Tool 12: Use Health Education Material

Effectively
Tool 13: Welcome Patients: Helpful Attitude, Signs, and More

Tools to Improve Self-Management and Empowerment

Tool 14: Encourage Questions
Tool 15: Make Action Plans
Tool 16: Improve Medication Adherence and Accuracy
Tool 17: Get Patient Feedback

Tools to Improve Supportive Systems

Tool 18: Link Patients to Non-Medical Support
Tool 19: Medication Resources
Tool 20: Use Health and Literacy Resources in the Community

AHRQ will now conduct a demonstration of the Health Literacy Universal Precautions Toolkit. The purpose of this demonstration project is to explore whether the Toolkit helps motivated practices to make changes intended to improve communication with and support for patients of all literacy levels.

Twelve primary care practices will be recruited to implement at least four tools from the Health Literacy Universal Precautions Toolkit. The project team will provide participating practices with limited technical assistance throughout the implementation period. Data regarding the assistance provided will contribute to the team's assessment of the ease with which specific tools can be implemented and will provide insight into additional resources and guidance that might be valuable to add to the Toolkit.

This study is being conducted by AHRQ through its contractors, the University of Colorado, the American Academy of Family Physicians National Research Network and Synovate, Inc., under its statutory authority to conduct and support research on health care and on systems for the delivery of such care, including activities with respect to the quality, effectiveness, efficiency, appropriateness, and value of health care services and with respect to quality measurement and improvement (42 U.S.C. 299a(a)(1) and (2)).

Method of Collection

To achieve the goals of this project the following activities and data collections will be implemented:

(1) *Practice Screening Calls:* To recruit practices into the project, the project team will conduct screening calls with all interested practices, typically with the lead physician or practice administrator. The introductory script presents an overview of the project. For those practices that agree to participate, some basic data about the practice will be collected, such as the type of practice, the number of full and part time clinicians, the number of patients seen in a typical week and the percentage of patients enrolled in Medicaid.

(2) *Health Literacy Assessment Questions:* In implementing Tool 2, which guides practices in conducting a self-assessment of their health literacy-related systems and procedures, practices will complete the Health Literacy Assessment Questions at the beginning of the project. We will request that they complete the same items again following implementation so that we may examine whether these items suggest change over time. Practices will collect responses from staff members representing different components of the practice (e.g., clinicians, front desk staff). A member of the practice staff, who will be designated the project coordinator, will oversee collection of survey data.

(3) *Implementation Tracking Form:* The Implementation Tracking Form will be completed by the leader of the Health Literacy Team at the beginning of the project period and updated prior to each check-in phone call with project staff (see item 13 below). (As part of implementation of Tool 1, participating practices will establish a Health Literacy Team to oversee Toolkit implementation.) This form elicits information about the timing with which different steps in the implementation process were completed (e.g., when was the first training conducted).

(4) *Webinar/Orientation:* Prior to beginning data collection, we will conduct a Webinar with all practices to review the pre-implementation data collection requirements and provide an overview of Tools 1 and 2, which practices are to complete prior to our conducting site visits. Up to four members of the Health Literacy Team or other practice members will attend.

(5) *On-site Observation:* At pre- and post-implementation, the project team will conduct an observational review of the practice environment to assess health literacy-related features, such as readability of patient materials in the waiting room and ease of patient navigation. This data collection activity involves no burden to participating practices and their patients and, therefore, is not included in the burden estimates in Section 12.

(6) *Patient Survey:* The Patient Survey will be collected at pre- and post-implementation and is designed to obtain patient input on health literacy-related performance of providers and staff (e.g., ''did your provider use medical words you did not understand''). Each practice will recruit 50 patients at each time point to complete the survey. The survey will include the same items at the two time points. The on-site project coordinator will oversee recruitment and collection of survey data.

(7) *Survey Using Items from the Consumer Assessment of Healthcare Providers and Systems (CAHPS®):* In two of the participating practices, selected health literacy-related items from the CAHPS Clinician and Group Survey and CAHPS Item Set for Addressing Health Literacy will be administered at pre- and post-implementation. Surveys will be sent by mail, with phone follow up. Across practices and the two time points (pre- and post-implementation), we will collect surveys for 1800 patients.

(8) *Medication Review Form:* Each practice that chooses to implement Tool 8 (Brown Bag Medication Review) will conduct medication reviews with 20 patients at pre-implementation and 20 at post-implementation, completing the Medication Review Form for each review. (We estimate that 3 of the 12 participating practices will choose to implement Tool 8.) During these reviews, the Medication Review Form will be completed to record errors found in the medication regimen (e.g., expired medications, incorrect dosing, patient misunderstanding of regimen). So that this data collection activity will be of value to practices and patients, reviews will be conducted with patients identified through routine clinical practice (e.g., the prescription refill process, regular follow-up visits) to require a full review of current medications.

(9) *Practice Staff Survey:* We will request that all staff members of participating practices complete the Practice Staff Survey, which elicits staff perceptions regarding health literacy-related practices (e.g., staff use of effective communication techniques and confirmation of patient comprehension). Surveys will be completed at pre-implementation and post-implementation, with items varying slightly at the two time points. The project coordinator for each practice will oversee collection of survey data.

(10) *Health Literacy Team Leader Survey:* The leader of the Health Literacy Team will complete this survey at pre- and post-implementation to provide data regarding health literacy-related policies and details regarding Toolkit implementation (e.g., has the reading level of written patient materials been assessed, how does the practice remind patients to bring in medication bottles to facilitate medication reviews).

(11) *Health Literacy Team Leader Interview:* The leader of the Health Literacy Team will be interviewed in person at pre- and post-implementation. At the beginning of the project, this qualitative interview will focus on expectations regarding implementation (e.g., expected barriers) and technical assistance needs. The post-implementation interview is designed to elicit detailed information about the implementation process, suggested revisions to the Toolkit, and an assessment of the technical assistance provided.

(12) *Check-in Phone Calls:* To ensure that practices stay on track, the project team will contact practices on a regular schedule to assess progress and provide facilitation that might be needed to help practices address barriers they may be experiencing. Calls will take place two weeks, one month, two months, and four months into implementation and will involve the leader of the Health Literacy Team.

(13) *Health Literacy Team Member Interview:* So that we may obtain information about the implementation process as well as functioning of the Health Literacy Team (e.g., how difficult was it to reach decisions about which tools to implement), we also will interview a member of the Team other than the Team leader at post-implementation. Interviews will be conducted on site at the practice.

(14) *Practice Staff Member Interview:* So that we can obtain input about Toolkit implementation and project participation from someone outside of the Health Literacy Team, we will conduct on-site interviews at post-implementation with one or two staff members who were not involved in the Health Literacy Team.

Data collected will be used for the following purposes:

- To explore whether/how the Toolkit assists motivated practices to take a systematic approach to reducing the complexity of health care and ensuring that patients can succeed in the health care environment. Based on the data collected, AHRQ will issue a Technical Assistance Guide for use by practice facilitators that work with Toolkit implementers and Case Studies that highlight lessons learned.
- To improve the Health Literacy Universal Precautions Toolkit, AHRQ will issue a new edition of the Toolkit based on insights from this study.
- To see whether items from the CAHPS Item Set for Addressing Health Literacy are sensitive to quality improvement activities. AHRQ will use the findings to modify the document entitled ''About the CAHPS Item Set for Addressing Health Literacy,'' which discusses use of the items for quality improvement.

Estimated Annual Respondent Burden

Exhibit 1 shows the estimated annualized burden hours for the respondents' time to participate in this research.

- Practice Screening Calls will be conducted with one person from 20 different practices, with 12 practices expected to ''screen-in'' and be included in this project. The screening calls will take 20 minutes.
- The Health Literacy Assessment Questions will be completed twice; once at pre-implementation and again at post-implementation. We estimate that five staff members from each of the 12 practices will complete the questionnaire at each time point, for a total of 120 respondents, and will require 30 minutes to complete. (The same staff members will not be targeted to complete the survey at both time points.) A staff member will distribute and collect the survey, which we estimate will take approximately five minutes per survey.
- The Implementation Tracking Form will be completed at the beginning of the project and updated before each of the four Check-in Phone Calls and again at the end of the intervention.

The form will be completed by the Leader of each practice's Health Literacy Team and will take approximately 5 minutes to complete each time.

- The Webinar/Orientation will take place at the beginning of the intervention and will include, on average, 4 staff members from each of the 12 practices and may take up to 2 hours.
- The Patient Survey will be completed at each of the 12 practices at pre-implementation and post-implementation. Fifty patients from each time period will be surveyed at each of the practices for a total of 1200 patients. The same patients will not be targeted to complete both surveys. The two surveys are identical and will take 20 minutes to complete. These will be administered by a practice staff member (recruiting patients, distributing surveys, collecting surveys). It is estimated that it will take 10 minutes of the staff member's time to administer each survey.
- The Survey Using Items from the Consumer Assessment of Healthcare Providers and Systems (CAHPS) will be completed by mail or phone and will take approximately 12 minutes to complete. It will be completed by a total of about 1800 patients total at two of the participating practices; 900 will complete it at pre-implementation and 900 at post-implementation. The same patients will not be targeted to complete both surveys.
- The Medication Review Form will not be used by all of the participating practices. We estimate that 3 of the 12 practices will choose to implement Tool 8 from the Toolkit (Brown Bag Medication Review), and only practices implementing Tool 8 will collect these data. For practices that do complete the Medication Review Form, we expect that about four clinic staff per practice will complete this form and each will complete it approximately five times at each time point (pre-implementation and post-implementation). Therefore, a total of 12 clinical staff will complete a total of 120 Medication Review Forms and each form will take about 30 minutes to complete.
- The Practice Staff Survey will be completed twice by each staff member; about 18 staff at each of the 12 practices. The pre-implementation version of the survey will take 15 minutes to complete, whereas the post-implementation version of the survey will take 20 minutes to complete. The surveys will be disseminated and collected by a member of the practice, a role which we expect to take about five minutes for each survey.
- The Health Literacy Team Leader Survey is completed by the Team Leader at each of the practices at pre-implementation and post-implementation. The pre-implementation version of the survey will take 15 minutes to complete, whereas the post-implementation version of the survey will take 20 minutes to complete.
- During the course of the intervention, there will be four Check-in Phone Calls with the Health Literacy Team Leader at each practice. Each call will last approximately 30 minutes.
- The Health Literacy Team Leader from each practice will be interviewed at pre-implementation and post-implementation. The pre-implementation version of the interview will take about 30 minutes, whereas the post-implementation interview will take 90 minutes.
- The Health Literacy Team Member interview will target one member of the Health Literacy Team from each practice (other than the Team Leader) and will be conducted at the post-intervention time period. The interview is expected to last 90 minutes.
- For the Practice Staff Member Interview, two other staff members per practice (24 total) will be interviewed post-implementation and these will take 30 minutes to complete.

The total annualized burden hours are estimated to be 1,446 hours.

EXHIBIT 1—ESTIMATED ANNUALIZED BURDEN HOURS

Form name	Number of respondents	Number of responses per respondent	Hours per response	Total burden hours
Practice Screening Calls	20	1	20/60	7
Health Literacy Assessment Questions:				
Staff	120	1	30/60	60
Staff Administration	12	10	5/60	10
Implementation Tracking Form	12	6	5/60	6
Webinar/Orientation	48	1	2	96
Patient Survey:				
Patients	1,200	1	20/60	400
Staff Administration	12	100	10/60	200
Survey Using Items from the Consumer Assessment of Healthcare Providers and Systems (CAHPS)	1,800	1	12/60	360
Medication Review Form	12	10	30/60	60
Practice Staff Survey—Pre-implementation:				
Staff	216	1	15/60	54
Staff Administration	12	18	5/60	18
Practice Staff Survey—Post-implementation:				
Staff	216	1	20/60	72
Staff Administration	12	18	5/60	18
Health Literacy Team Leader Survey-Pre-implementation	12	1	15/60	3
Health Literacy Team Leader Survey-Post-implementation	12	1	20/60	4
Check-in Phone Calls	12	4	30/60	24
Health Literacy Team Leader Interview—pre-implementation	12	1	30/60	6
Health Literacy Team Leader Interview—post-implementation	12	1	1.5	18
Health Literacy Team Member Interview—post-implementation	12	1	1.5	18
Practice Staff Member Interview—post-implementation	24	1	30/60	12
Total	3,788	na	na	1,446

Exhibit 2 shows the estimated annual cost burden to respondents, based on their time to participate in this research. The annual cost burden is estimated to be $34,329.

EXHIBIT 2—ESTIMATED ANNUALIZED COST BURDEN

Form name	Number of respondents	Total burden hours	Average hourly wage rate [a]	Total cost burden
Practice Screening Calls	20	7	$18.52 [c]	$130
Health Literacy Assessment Questions:				
Staff	120	60	$29.15 [d]	$1,749
Staff Administration	12	10	$18.52 [c]	$185
Implementation Tracking Form	12	6	$18.52 [c]	$111
Webinar/Orientation	48	96	$29.15 [d]	$2,798
Patient Survey:				
Patients	1,200	400	$22.48 [b]	$8,992
Staff Administration	12	200	$18.52 [c]	$3,704
Survey Using Items from the Consumer Assessment of Healthcare Providers and Systems (CAHPS)	1,800	360	$22.48 [b]	$8,093
Medication Review Form	12	60	$29.15 [d]	$1,749
Practice Staff Survey—Pre-implementation:				
Staff	216	54	$29.15 [d]	$1,574
Staff Administration	12	18	$18.52 [c]	$333
Practice Staff Survey—Post-implementation:				
Staff	216	72	$29.15 [d]	$2,099
Staff Administration	12	18	$18.52 [c]	$333
Health Literacy Team Leader Survey-Pre-implementation	12	3 $29.15 [d]	$87	
Health Literacy Team Leader Survey-Post-implementation	12	4	$29.15 [d]	$117
Check-in Phone Calls Health Literacy Team Leader	12	24	$29.15 [d]	$700
Interview—pre-implementation Health Literacy Team Leader	12	6	$29.15 [d]	$175
Interview—post-implementation Health Literacy Team Member	12	18	$29.15 [d]	$525
Interview—post-implementation Practice Staff Member	12	18	$29.15 [d]	$525
Interview—post-implementation	24	12	$29.15 [d]	$350

EXHIBIT 2—ESTIMATED ANNUALIZED COST BURDEN—Continued

Form name	Number of respondents	Total burden hours	Average hourly wage rate [a]	Total cost burden
Total	3,788	1,446	na	$34,329

[a] Mean hourly and wage costs for Colorado were derived from the Bureau of Labor and Statistics National Compensation Survey for May 2010 (*http://www.bls.gov/oes/current/oes_co.htm*).
[b] Hourly rate for all workers (occupation code 00–0000) estimates the cost of time for patients.
[c] Hourly rate for medical records and health information technician (29–2071).
[d] Hourly rate for Healthcare Practitioners and Technical Workers, All Other (29–9799).

Estimated Annual Costs to the Federal Government

Exhibit 3 shows the estimated total and annualized cost to the Federal Government for conducting this research. These estimates include the costs associated with the project such as the preparation of survey administration procedures, labor costs, administrative expenses, costs associated with copying, postage, and telephone expenses, data management and analysis, preparation of final reports, and dissemination of findings/results/products. The annualized and total costs are identical since the data collection period will last for one year. The total cost is estimated to be $784,910.

EXHIBIT 3—ESTIMATED TOTAL AND ANNUALIZED COST

Cost component	Total	Annualized cost
Administration	$81,654	$81,654
Research Activities	446,201	446,201
Dissemination Activities	57,222	57,222
Final Report	57,864	57,864
Overhead	141,969	141,969
Total	784,910	784,910

Request for Comments

In accordance with the Paperwork Reduction Act, comments on AHRQ's information collection are requested with regard to any of the following: (a) Whether the proposed collection of information is necessary for the proper performance of AHRQ health care research and health care information dissemination functions, including whether the information will have practical utility; (b) the accuracy of AHRQ's estimate of burden (including hours and costs) of the proposed collection(s) of information; (c) ways to enhance the quality, utility, and clarity of the information to be collected; and (d) ways to minimize the burden of the collection of information upon the respondents, including the use of automated collection techniques or other forms of information technology.

Comments submitted in response to this notice will be summarized and included in the Agency's subsequent request for OMB approval of the proposed information collection. All comments will become a matter of public record.

Dated: May 3, 2012.

Carolyn M. Clancy,

Director.

[FR Doc. 2012–12171 Filed 5–18–12; 8:45 am]

BILLING CODE 4160–90–M

DEPARTMENT OF HEALTH AND HUMAN SERVICES

Agency for Healthcare Research and Quality

Agency Information Collection Activities: Proposed Collection; Comment Request

AGENCY: Agency for Healthcare Research and Quality, HHS.

ACTION: Notice.

SUMMARY: This notice announces the intention of the Agency for Healthcare Research and Quality (AHRQ) to request that the Office of Management and Budget (OMB) approve the proposed information collection project: ''Workflow Assessment for Health IT Toolkit Evaluation.'' In accordance with the Paperwork Reduction Act, 44 U.S.C. 3501–3521, AHRQ invites the public to comment on this proposed information collection.

This proposed information collection was previously published in the **Federal Register** on March 9th, 2012 and allowed 60 days for public comment. One comment was received. The purpose of this notice is to allow an additional 30 days for public comment.

DATES: Comments on this notice must be received by June 20, 2012.

ADDRESSES: Written comments should be submitted to: AHRQ's OMB Desk Officer by fax at (202) 395–6974 (attention: AHRQ's desk officer) or by email at *OIRA_submission@omb.eop.gov* (attention: AHRQ's desk officer).

Copies of the proposed collection plans, data collection instruments, and specific details on the estimated burden can be obtained from the AHRQ Reports Clearance Officer.

FOR FURTHER INFORMATION CONTACT: Doris Lefkowitz, AHRQ Reports Clearance Officer, (301) 427–1477, or by email at *doris.lefkowitz@AHRQ.hhs.gov.*

SUPPLEMENTARY INFORMATION:

Proposed Project

Workflow Assessment for Health IT Toolkit Evaluation

AHRQ is a lead Federal agency in developing and disseminating evidence and evidence-based tools on how health IT can improve health care quality, safety, efficiency, and effectiveness. Understanding clinical work practices and how they will be affected by practice innovations such as implementing health IT has become a central focus of health IT research. While much of the attention of health IT research and development had been directed at the technical issues of building and deploying health IT

systems, there is growing consensus that deployment of health IT has often had disappointing results, and while technical challenges remain, there is a need for greater attention to sociotechnical issues and the problems of modeling workflow.

The implementation of health IT in practice is costly in time and effort and less is known about these issues in small- and medium-sized practices where the impact, of improved or disrupted workflows may have especially significant consequences because of limited resources. Practices would derive great benefit from effective tools for assessing workflow during many types of health IT implementation, such as creating disease registries, collecting quality measures, using patient portals, or implementing a new electronic health record system. To that end, in 2008, AHRQ funded the development of the Workflow Assessment for Health IT toolkit (Workflow toolkit). Through this toolkit, end users should obtain a better understanding of the impact of health IT on workflow in ambulatory care for each of the following stages of health IT implementation: (1) Determining system requirements, (2) selecting a vendor, (3) preparing for implementation, or (4) using the system post implementation. They should also be able to effectively utilize the publicly available workflow tools and methods before, during, and after health IT implementation while recognizing commonly encountered issues in health IT implementation. In the current project AHRQ is conducting an evaluation to ensure that the newly developed Workflow toolkit is useful to small- and medium-sized ambulatory care clinic managers, clinicians, and staff.

The evaluation will consist of field assessments of use of the Workflow toolkit in 18 small- and medium-sized practices and gathering feedback from two Health IT Regional Extension Centers (RECs) who are providing support to some of these practices. The evaluation will address the issues of system validation as classically defined in software engineering: Determining whether the software or system actually meets the requirements of the user to perform the relevant tasks. The evaluation will answer the following questions:

- Are results correct? Are individual tools included in the Workflow toolkit accurate? Does workflow assessment with the Workflow toolkit provide accurate information the practice can act upon?
- Does knowledge change? Does user knowledge and capacity change? Does user knowledge of workflow in their own practice change?
- Do decisions change? Do user decisions about workflow assessment change? Do user decisions about health information technology (health IT) implementation change?
- Do outcomes change? Are changes in workflow favorable? Are changes in clinical practices favorable? Are changes to the practice favorable? Are changes for patients favorable?

To answer these questions the proposed evaluation will be conducted to examine usefulness of the Workflow toolkit in small- and medium-sized practices. The evaluation will be conducted with 18 practices affiliated with one of two Practice-based Research Networks (PBRNs) in Oregon and Wisconsin, and with the Health IT Regional Extension Centers (RECs) in those States. Participants will be recruited who agree to use the Workflow toolkit in their specific health IT project for a minimum of 10 weeks. This will provide an opportunity to observe use of the Workflow toolkit amongst its intended end users, who are best positioned to provide critical feedback to improve the functionality of the Workflow toolkit.

This study is being conducted by AHRQ through its contractors, the Oregon Rural Practice-based Research Network (ORPRN) and the Wisconsin Research & Education Network (WREN), pursuant to AHRQ's statutory authority to conduct and support research on health care and on systems for the delivery of such care, including activities with respect to the quality, effectiveness, efficiency, appropriateness and value of health care services and with respect to health care technologies, facilities, and equipment. 42 U.S.C. 299a(a)(1) and (5).

Method of Collection

To achieve the goals of this project the following activities and data collections will be implemented:

(1) *Creation of Clinic Study Team:* Each participating practice will form small teams, referred to as Clinic Study Teams, who will participate in the Pre-Workflow Toolkit Interview, use the Workflow toolkit and participate in Observations, and participate in the Post-Workflow Toolkit Interview. Each team will include a maximum of 14 individuals and may represent the following types of respondents: clinicians, office managers, front office staff, medical assistant or nurse, nurse care manager, social worker, health educator, information technology specialist, and/or quality improvement director.

(2) *Pre-Workflow Toolkit Interview:* these will consist of semi-structured interviews with practice staff and with three specialists from each Health IT Regional Extension Center. These interviews are designed to examine the knowledge, attitudes, and barriers to and facilitators of workflow assessment for implementation of health IT. Respondents will be asked to define workflow, to rate its importance to the practice or REC and to health IT implementation, to describe factors motivating use of the Workflow toolkit, to describe previous experience with assessing or redesigning workflow, and to describe previous experience with health IT implementation and the effect of this implementation on work processes in their practice (practices) or for their clients (RECs).

(3) *Observations:* Participating practices will form small teams (Clinic Study Teams) who will use the Workflow toolkit. A member of the project staff will join each Clinic Study Team or the three specialists at each of the two RECs, as participant-observer and will meet with the team at times to be determined by the teams, but at least every two weeks after the Pre-Workflow Toolkit Interview for at least four visits. During these visits project staff will participate in and keep field notes regarding the practice's or REC's workflow assessment activities.

(4) *Usage Logs:* As part of their workflow assessment process, Clinic Study Teams, and REC staff, will be asked to meet weekly. For weekly meetings at which a project staff member is not present, Clinic Study Teams and REC staff will keep a record of workflow assessment activities including use of the workflow assessment toolkit, recording in a free-form journal the purpose and results of the activity as well as issues that arose in the process.

(5) *Post-Workflow Toolkit Interview:* This final interview will consist of individual semi-structured interviews of practice staff and three specialists from each Health IT Regional Extension Center. These interviews will (a) Re-examine their knowledge and attitudes about workflow assessment; (b) revisit the barriers to and facilitators of workflow assessment; (c) discuss changes that have taken place as a result of the process; (d) explore outcomes in terms of: (d.1) for practices, the perceived impacts on clinicians, the practice staff, the practice, and the patients; and (d.2) for RECs, technician confidence in guiding affiliated clinics in understanding workflow; and finally (e) assess the overall impressions about

the usefulness of the Workflow toolkit as well as any suggested changes.

The outcome of the evaluation will be a report including recommendations for enhancing and improving the Workflow toolkit. The report will provide results about the perceived usefulness of the Workflow toolkit. Results will be produced separately for practices and RECs as well as for both user groups as a whole. The report will also include specific suggestions on how to revise Workflow toolkit to make it more useful to its intended audiences.

Estimated Annual Respondent Burden

Exhibit 1 shows the estimated annual burden hours for each respondent's time to participate in this evaluation. Each practice will convene a ''Clinic Study Team'' consisting of no more than 14 individuals; this process will take approximately 8 hours per practice, or about 35 minutes per person. The Pre-Workflow interview will be completed by a total of up to 258 persons (about 14 per practice and 3 per REC) and requires one hour. Up to four observations will be conducted for up to 258 persons and they are each estimated to take two hours. Ten usage logs will be completed by a total of up to 258 persons (one per week of study activity) and completion of a single usage log should take no longer than 15 minutes. The Post-Workflow interview will be completed by a total of up to 258 persons and requires one hour.

The total annual burden is estimated to be 3,372.

Exhibit 2 shows the estimated annual cost burden associated with the organizations' time to participate in this research. The total annual burden is estimated to be $104,813.

EXHIBIT 1—ESTIMATED ANNUALIZED BURDEN HOURS

Data collection	Maximum number of respondents	Number of responses per respondent	Hours per response	Total burden hours
Creation of Clinic Study Team	252	1	35/60	147
Pre-Workflow Toolkit Interview	258	1	1	258
Observations	258	4	2	2,064
Usage Logs	258	10	15/60	645
Post-Workflow Toolkit Interview	258	1	1	258
Total	1,284	NA	NA	3,372

EXHIBIT 2—ESTIMATED ANNUALIZED COST BURDEN

Data collection	Maximum number of respondents	Total burden hours	Average hourly rate *	Total cost burden
Creation of Clinic Study Team	252	147	32.28	4,745
Pre-Workflow Toolkit Interview	258	258	32.28	8,005
Observations	258	2,064	32.28	64,044
Usage Logs	258	645	32.28	20,014
Post-Workflow Toolkit Interview	258	258	32.28	8,005
Total	1,284	3,372	NA	104,813

* The hourly wage for the participants across the four data collections (pre-workflow toolkit interviews, observations, usage logs, and post-workflow toolkit interview) is based upon a weighted mean of the average hourly wages for Family and General Practitioners (1.5; $87.84 per hour); office managers (1.0; $35.18 per hour); front office staff (1.0; $15.15 per hour); medical assistants or nurses (2.5; $24.36 per hour); nurse care managers (0.5; $33.57); social workers (0.1; $24.44 per hour); health educators (0.1; $25.12 per hour); information technology specialists (0.25; $23.43 per hour); quality improvement directors (0.25; 25.12 per hour); and technical staff (1.0; $33.14 per hour) for Oregon and Wisconsin from the U.S. Department of Labor, Bureau of Labor Statistics, May 2010 National Occupational Employment and Wage Estimates for the United States, Occupational Employment Statistics (OES), Washington, DC (Feb. 2009), *http://bls.gov/oes/2010/may/www.bls.govoessrcst.htm* (accessed November, 2011).

Estimated Annual Costs to the Federal Government

The estimated total cost to the Federal Government for this project is $793,456 over a 27-month period from September 23, 2011 to December 22, 2013. The estimated average annual cost is $352,646. Exhibit 3 provides a breakdown of the estimated total and average annual costs by category.

EXHIBIT 3—ESTIMATED TOTAL AND ANNUAL COST * TO THE FEDERAL GOVERNMENT

Cost component	Total cost	Annualized cost
Project Management and Coordination Activities	$96,449	$42,866
Develop Research and Recruitment Plans	78,383	34,837
Compliance with PRA	12,267	5,452
Obtaining IRB approval	10,254	4,557
Develop Data Analysis Plan	18,246	8,109
Conduct Evaluation	534,401	237,512
Data analysis and Final Report	23,554	10,468
Ensure 508-compliant deliverables	19,902	8,845
Total	793,456	352,646

* Costs are fully loaded including overhead and G&A.

Request for Comments

In accordance with the Paperwork Reduction Act, comments on AHRQ's information collection are requested with regard to any of the following: (a) Whether the proposed collection of information is necessary for the proper performance of AHRQ healthcare research and healthcare information dissemination functions, including whether the information will have practical utility; (b) the accuracy of AHRQ's estimate of burden (including hours and costs) of the proposed collection(s) of information; (c) ways to enhance the quality, utility, and clarity of the information to be collected; and (d) ways to minimize the burden of the collection of information upon the respondents, including the use of automated collection techniques or other forms of information technology.

Comments submitted in response to this notice will be summarized and included in the Agency's subsequent request for OMB approval of the proposed information collection. All comments will become a matter of public record.

Dated: May 3, 2012.

Carolyn M. Clancy,

Director.

[FR Doc. 2012–12168 Filed 5–18–12; 8:45 am]

BILLING CODE 4160–90–M

DEPARTMENT OF HEALTH AND HUMAN SERVICES

Centers for Disease Control and Prevention

[60–Day–12–0834]

Proposed Data Collections Submitted for Public Comment and Recommendations

In compliance with the requirement of Section 3506(c)(2)(A) of the Paperwork Reduction Act of 1995 for opportunity for public comment on proposed data collection projects, the Centers for Disease Control and Prevention (CDC) will publish periodic summaries of proposed projects. To request more information on the proposed projects or to obtain a copy of the data collection plans and instruments, call 404–639–7570 or send comments to Kimberly S. Lane, at 1600 Clifton Road, MS D74, Atlanta, GA 30333 or send an email to *omb@cdc.gov.*

Comments are invited on: (a) Whether the proposed collection of information is necessary for the proper performance of the functions of the agency, including whether the information shall have practical utility; (b) the accuracy of the agency's estimate of the burden of the proposed collection of information; (c) ways to enhance the quality, utility, and clarity of the information to be collected; and (d) ways to minimize the burden of the collection of information on respondents, including through the use of automated collection techniques or other forms of information technology. Written comments should be received within 60 days of this notice.

Proposed Project

Occupational Injuries and Illnesses among Emergency Medical Services (EMS) Workers: A NEISS–Work Telephone Interview Survey—Revision—National Institute for Occupational Safety and Health (NIOSH), Centers for Disease Control and Prevention (CDC).

Background and Brief Description

Studies have reported that EMS workers have higher rates of non-fatal injuries and illnesses as compared to the general worker population. As EMS professionals are tasked with protecting the health of the public and treating urgent medical needs, it follows that understanding and preventing injuries and illnesses among EMS workers will have a benefit reaching beyond the workers to the general public.

As mandated in the Occupational Safety and Health Act of 1970 (Pub. L. 91–596), the mission of NIOSH is to conduct research and investigations on occupational safety and health. Related to this mission, the purpose of this project is to conduct research that will provide a detailed description of non-fatal occupational injuries and illnesses incurred by EMS workers. This project bridges a gap of limited existing EMS worker injury and illness surveillance identified in a 2007 National Highway Traffic Safety Administration (NHTSA) report. The project uses two related data sources. The first source is data abstracted from medical records of EMS workers treated in a nationally stratified sample of emergency departments. These data are routinely collected by the occupational supplement to the National Electronic Injury Surveillance System (NEISS–Work). The second data source, for which NIOSH is seeking OMB approval for a two year extension, is responses to telephone interview surveys of the injured and ill EMS workers identified within NEISS–Work. Collection of telephone interview data began in July 2010.

Data collected under the original OMB approval for this project indicate that EMS workers are willing to respond to detailed questions about their occupational injury and related circumstances. However, in order to obtain enough data to produce stable, detailed national estimates, data collection should continue until July 1, 2014. This will provide a total of four years of data for analysis.

The ongoing telephone interview surveys will supplement NEISS–Work data with an extensive description of EMS worker injuries and illnesses, including worker characteristics, injury types, injury circumstances, injury outcomes, and use of personal protective equipment. Previous reports describing occupational injuries and illnesses to EMS workers provide limited details on specific regions or sub-segments of the population and many are outdated. As compared to these earlier studies, the scope of the telephone interview data is broader as it includes sampled cases nationwide and has no limitations in regards to type of employment (*i.e.,* volunteer versus career). Results from the telephone interviews will be weighted and reported as estimates of EMS workers treated for occupational injuries and illnesses in emergency departments.

The sample size for the telephone interview survey is estimated to be approximately 150 EMS workers annually for the proposed four year duration of the study. This estimate is based on preliminary analysis of the data collected to-date. The estimate has been reduced from the original sample projection of 175 EMS workers. Consequently, the burden has been reduced as well. Each telephone interview takes approximately 20 minutes to complete, resulting in an annualized burden estimate of 50 hours. Using the routine NEISS–Work data, an analysis of all identified EMS workers will be performed to determine if there are any differences between the telephone interview responder and non-responder groups.

This project is a collaborative effort between the Division of Safety Research in the NIOSH and the Office of Emergency Medical Services in NHTSA. Both agencies have a strong interest in improving surveillance of EMS worker injuries and illnesses to provide the information necessary for effectively targeting and implementing prevention efforts and, consequently, reducing occupational injuries and illnesses among EMS workers. The Consumer Product Safety Commission (CPSC) will also contribute to this project as they are responsible for coordinating the collection of all NEISS–Work data and for overseeing the collection of all telephone interview data.

There is no cost to respondents other than their time.

ESTIMATED ANNUALIZED BURDEN HOURS

Respondents	Number of respondents	Number of responses per respondent	Average burden per response (in hours)	Total burden (in hours)
EMS workers	150	1	20/60	50
Total				50

Kimberly S. Lane,

Deputy Director, Office of Science Integrity, Office of the Associate Director for Science, Office of the Director, Centers for Disease Control and Prevention.

[FR Doc. 2012–12287 Filed 5–18–12; 8:45 am]

BILLING CODE 4163–18–P

DEPARTMENT OF HEALTH AND HUMAN SERVICES

Centers for Disease Control and Prevention

Disease, Disability, and Injury Prevention and Control Special Emphasis Panel (SEP): Initial Review

The meeting announced below concerns Characterizing the Short and Long Term Consequences of Traumatic Brain Injury (TBI) among Children in the United States (FOA) CE12–004, initial review.

In accordance with Section 10(a)(2) of the Federal Advisory Committee Act (Pub. L. 92–463), the Centers for Disease Control and Prevention (CDC) announces the aforementioned meeting:

Time and Date: 1:00 p.m.–5:00 p.m., June 11, 2012 (Closed).

Place: Crowne Plaza Hotel Atlanta Perimeter at Ravinia, 4355 Ashford Dunwoody Road, Atlanta, Georgia 30346.

Status: The meeting will be closed to the public in accordance with provisions set forth in Section 552b(c) (4) and (6), Title 5 U.S.C., and the Determination of the Director, Management Analysis and Services Office, CDC, pursuant to Public Law 92–463.

Matters To Be Discussed: The meeting will include the initial review, discussion, and evaluation of applications received in response to ''Characterizing the Short and Long Term Consequences of Traumatic Brain Injury (TBI) among Children in the United States, FOA CE12–004.''

Contact Person for More Information: J. Felix Rogers, Ph.D., M.P.H., Scientific Review Officer, CDC, 4770 Buford Highway NE., Mailstop F63, Atlanta, Georgia 30341, Telephone (770) 488–4334.

The Director, Management Analysis and Services Office, has been delegated the authority to sign **Federal Register** notices pertaining to announcements of meetings and other committee management activities, for both the Centers for Disease Control and Prevention and the Agency for Toxic Substances and Disease Registry.

Dated: May 15, 2012.

Elaine L. Baker,

Director, Management Analysis and Services Office, Centers for Disease Control and Prevention.

[FR Doc. 2012–12281 Filed 5–18–12; 8:45 am]

BILLING CODE 4163–18–P

DEPARTMENT OF HEALTH AND HUMAN SERVICES

Centers for Disease Control and Prevention

Advisory Committee on Immunization Practices (ACIP)

In accordance with section 10(a)(2) of the Federal Advisory Committee Act (Pub. L. 92–463), the Centers for Disease Control and Prevention (CDC) announce the following meeting of the aforementioned committee:

Times and Dates: 8:00 a.m.–5:00 p.m., June 20, 2012, 8:00 a.m.–1:00 p.m., June 21, 2012.

Place: CDC, Tom Harkin Global Communications Center, 1600 Clifton Road NE., Building 19, Kent ''Oz'' Nelson Auditorium, Atlanta, Georgia 30333.

Status: Open to the public, limited only by the space available.

Purpose: The committee is charged with advising the Director, CDC, on the appropriate uses of immunizing agents. In addition, under 42 U.S.C. 1396s, the committee is mandated to establish and periodically review and, as appropriate, revise the list of vaccines for administration to vaccine-eligible children through the Vaccines for Children (VFC) program, along with schedules regarding the appropriate periodicity, dosage, and contraindications applicable to the vaccines. Further, under provisions of the Affordable Care Act, at section 2713 of the Public Health Service Act, immunization recommendations of the ACIP that have been adopted by the Director of the Centers for Disease Control and Prevention must be covered by applicable health plans.

Matters To Be Discussed: The agenda will include discussions on: adult immunization, human papillomavirus vaccines, hepatitis B vaccine, meningococcal vaccines, influenza, pneumococcal vaccines, measles-mumps-rubella vaccine, pertussis, development of evidence-based recommendations, Institute of Medicine vaccine committee report, and anthrax vaccine adsorbed and vaccine supply. Recommendation votes are scheduled for pneumococcal vaccines and for influenza. Time will be available for public comment.

Agenda items are subject to change as priorities dictate.

Meeting is webcast live via the World Wide Web; for instructions and more information on ACIP please visit the ACIP Web site: *http://www.cdc.gov/vaccines/recs/acip/.*

Contact Person for More Information: Stephanie B. Thomas, National Center for Immunization and Respiratory Diseases, CDC, 1600 Clifton Road NE., MS–A27, Atlanta, Georgia 30333, Telephone (404) 639–8836; Email *ACIP@CDC.GOV.*

The Director, Management Analysis and Services Office, has been delegated the authority to sign **Federal Register** notices pertaining to announcements of meetings and other committee management activities for both the Centers for Disease Control and Prevention and the Agency for Toxic Substances and Disease Registry.

Dated: May 15, 2012.

Elaine L. Baker,

Director, Management Analysis and Services Office, Centers for Disease Control and Prevention.

[FR Doc. 2012–12279 Filed 5–18–12; 8:45 am]

BILLING CODE 4160–18–P

DEPARTMENT OF HEALTH AND HUMAN SERVICES

Centers for Disease Control and Prevention

Disease, Disability, and Injury Prevention and Control Special Emphasis Panel (SEP): Initial Review

The meeting announced below concerns Field Triage of Traumatic Brain Injury (TBI) in Older Adults Taking Anticoagulants or Platelet Inhibitors, Funding Opportunity Announcement (FOA) CE12–005, initial review.

In accordance with Section 10(a)(2) of the Federal Advisory Committee Act (Pub. L. 92–463), the Centers for Disease Control and Prevention (CDC) announces the aforementioned meeting:

Time and Date: 8:00 a.m.–12:00 p.m., June 11, 2012 (Closed).

Place: Crowne Plaza Hotel Atlanta Perimeter at Ravinia, 4355 Ashford Dunwoody Road, Atlanta, Georgia 30346.

Status: The meeting will be closed to the public in accordance with provisions set forth in Section 552b(c) (4) and (6), Title 5 U.S.C., and the Determination of the Director, Management Analysis and Services Office, CDC, pursuant to Public Law 92–463.

Matters To Be Discussed: The meeting will include the initial review, discussion, and evaluation of applications received in response to ''Field Triage of Traumatic Brain Injury (TBI) in Older Adults Taking Anticoagulants or Platelet Inhibitors, FOA CE12–005.''

Contact Person for More Information: J. Felix Rogers, Ph.D., M.P.H., Scientific Review Officer, CDC, 4770 Buford Highway NE., Mailstop F63, Atlanta, Georgia 30341, Telephone (770) 488–4334.

The Director, Management Analysis and Services Office, has been delegated the authority to sign **Federal Register** notices pertaining to announcements of meetings and other committee management activities, for both the Centers for Disease Control and Prevention and the Agency for Toxic Substances and Disease Registry.

Dated: May 15, 2012.

Elaine L. Baker,

Director, Management Analysis and Services Office, Centers for Disease Control and Prevention.

[FR Doc. 2012–12276 Filed 5–18–12; 8:45 am]

BILLING CODE 4163–18–P

DEPARTMENT OF HEALTH AND HUMAN SERVICES

Food and Drug Administration

[Docket No. FDA–2012–N–0377]

Clinical Study Design and Performance of Hospital Glucose Sensors

AGENCY: Food and Drug Administration, HHS.

ACTION: Notice of public meeting; request for comments.

The Food and Drug Administration (FDA) is announcing the following public meeting entitled ''Clinical Study Design and Performance of Hospital Glucose Sensors.'' The purpose of this public meeting is to discuss clinical study design considerations and performance metrics for innovative glucose sensors intended to be used in hospital point of care settings.

DATES: *Date and Time:* The public meeting will be held on June 25, 2012, from 8 a.m. to 5 p.m.

Location: The meeting will be held at the FDA White Oak Campus, 10903 New Hampshire Ave., Building 31, the Great Room (rm. 1503), Silver Spring, MD 20993. Entrance for the public meeting participants (non-FDA employees) is through Building 1 where routine security check procedures will be performed. For parking and security information, please refer to *http://www.fda.gov/AboutFDA/WorkingatFDA/BuildingsandFacilities/WhiteOakCampusInformation/ucm241740.htm*. The public meeting will also be available to be viewed online via webcast.

Contact: Vicki Moyer, Center for Devices and Radiological Health, Food and Drug Administration, 10903 New Hampshire Ave., Bldg. 66, Rm. 5626, Silver Spring, MD 20993, 301–796–6148, FAX: 301–847–8513, email: *vicki.moyer@fda.hhs.gov.*

Registration: Registration is free and on a first-come, first-served basis. Persons interested in attending this meeting must register online by 4 p.m., June 15, 2012. Early registration is recommended because facilities are limited and, therefore, FDA may limit the number of participants from each organization. If time and space permits, onsite registration on the day of the meeting will be provided beginning at 7 a.m.

If you need special accommodations due to a disability, please contact Susan Monahan, Center for Devices and Radiological Health, Food and Drug Administration, 10903 New Hampshire Ave., Bldg. 66, Rm. 4321, Silver Spring, MD 20993, 301–796–5661, email: *susan.monahan@fda.hhs.gov,* no later than June 15, 2012.

To register for the public meeting, please visit FDA's Medical Devices News & Events—Workshops & Conferences calendar at *http://www.fda.gov/MedicalDevices/NewsEvents/WorkshopsConferences/default.htm*. (Select this public meeting from the posted events list.) Please provide complete contact information for each attendee, including name, title, affiliation, address, email, and telephone number. Those without Internet access should contact Susan Monahan to register (see *Registration* section of this document). Registrants will receive confirmation after they have been accepted. You will be notified if you are on a waiting list.

Streaming Web cast of the Public Meeting: This public meeting will also be Web cast. Persons interested in viewing the Web cast must register online by 4 p.m., June 15, 2012. Early registration is recommended because Web cast connections are limited. Organizations are requested to register all participants, but to view using one connection per location. Web cast participants will be sent technical system requirements after registration and will be sent connection access information after June 20, 2012. If you have never attended a Connect Pro event before, test your connection at *https://collaboration.fda.gov/common/help/en/support/meeting_test.htm*. To get a quick overview of the Connect Pro program, visit *http://www.adobe.com/go/connectpro_overview*. (FDA has verified the Web site addresses in this document, but FDA is not responsible for any subsequent changes to the Web sites after this document publishes in the **Federal Register.**)

Requests for Oral Presentations: This public meeting includes a public comment session. During online registration you may indicate if you wish to speak and the proposed title for the public comment session, and which topics you wish to address. FDA has included general topics in this document. FDA will do its best to accommodate requests to make public comment. Following the close of registration, FDA will determine the amount of time allotted to each speaker and will select and notify participants by June 19, 2012. No commercial or promotional material will be permitted to be presented or distributed at the meeting.

Comments: FDA is holding this public meeting to obtain information on innovative kinds of hospital glucose sensors. In order to permit the widest possible opportunity to obtain public comment, FDA is soliciting electronic or written comments on all aspects of the meeting topics. The deadline for submitting comments related to this public meeting is July 23, 2012.

Regardless of attendance at the public meeting, interested persons may submit either electronic or written comments. Submit electronic comments to *http://www.regulations.gov*. Submit written comments to the Division of Dockets Management (HFA–305), Food and Drug Administration, 5630 Fishers Lane, rm. 1061, Rockville, MD 20852. It is only necessary to send one set of comments. Please identify comments with the docket number found in brackets in the heading of this document. In addition, when responding to specific questions as outlined in section II of this document, please identify the question you are addressing. Received comments may be seen in the Division of Dockets Management between 9 a.m. and 4 p.m., Monday through Friday and will be posted to the docket at *http://www.regulations.gov*.

Transcripts: Please be advised that as soon as a transcript is available, it will be accessible at *http://www.regulations.gov.* It may be viewed at the Division of Dockets Management (see *Comments*). A transcript will also be available in either hardcopy or on CD–ROM, after submission of a Freedom of Information request. Written requests are to be sent to the Division of Freedom of Information (ELEM–1029), Food and Drug Administration, 12420 Parklawn Dr., Element Bldg., Rockville, MD 20857. A link to the transcripts will also be available approximately 45 days after the meeting on the Internet at *http://www.fda.gov/MedicalDevices/NewsEvents/WorkshopsConferences/default.htm.* (Select this meeting from the posted events list.).

SUPPLEMENTARY INFORMATION:

I. Background

FDA is seeking input from the clinical community, academia, Government, industry, clinical laboratories, and other stakeholders regarding clinical validation studies and performance criteria for hospital glucose sensors. These types of devices are intended to be used at the patient bedside, and are different from currently available glucose sensors in that they are generally indwelling or inserted. Furthermore, they are often designed to collect continuous or near-continuous glucose concentrations for each patient.

These devices have the potential to benefit patient care but to date they are not widely available. This is due, in part, to the challenges in designing and studying these complex devices. One challenge is the study design itself; determining the types of patients to include and what data are needed to adequately validate performance is often difficult given the varied hospital environment and patient populations. Once the study is complete, determining whether or not the results are sufficiently accurate and reliable for the proposed intended use(s) is equally challenging.

The purpose of this public meeting is to share information about the challenges in validating these kinds of hospital glucose sensors and solicit public input and discussion. The feedback may increase communication and collaboration within the stakeholder community, and, ultimately, help overcome some of the current challenges associated with designing clinical studies and generating clinical performance data for these devices.

The public meeting will include two sessions of the following topics: (1) The clinical studies and data needed to adequately validate the performance of these devices in the intended use population and (2) discussion of metrics that may be used to evaluate results to demonstrate a safe and effective device. Each session will include presentations from physicians, Government, and other experts in the field. Presentations will be followed by panel discussions of session topics and questions from the audience.

II. Topics for Discussion at the Public Meeting

The following questions represent the kinds of topics that will be discussed at the meeting. The final questions to be discussed at each session will be available the day of the meeting.

1. Who is the likely intended use population for these devices and how will they be used in patient management? For example, will they be used for general hospital, surgical, critically ill, pediatric patients, etc.? What are the study considerations for evaluating the devices in these different populations?

2. How does the intended use of the device affect the design of the clinical studies and the evaluation and adequacy of device performance? For example, are the accuracy needs for a device used to monitor trends over time different from the accuracy needs of one where the individual glucose results are used to replace discrete glucose measurements? Is greater accuracy needed when the device is used in certain populations? What metrics can be used to evaluate whether or not results from these devices are sufficiently accurate and reliable for the proposed intended use(s)?

3. What conditions, medications, or therapies have the potential to cause interference and require evaluation? What kinds of studies/models are appropriate to evaluate interference?

4. Differences in glucose concentrations may be observed when testing arterial and venous blood samples from the same patient. How can the potential differences in blood glucose concentrations be addressed when conducting the clinical studies?

Dated: May 15, 2012.

Nancy K. Stade,

Deputy Director for Policy, Center for Devices and Radiological Health.

[FR Doc. 2012–12180 Filed 5–18–12; 8:45 am]

BILLING CODE 4160–01–P

DEPARTMENT OF HEALTH AND HUMAN SERVICES

Food and Drug Administration

[Docket No. FDA–2012–N–0437]

International Capacity Building With Respect to Food Safety; Public Meeting; Request for Comments

AGENCY: Food and Drug Administration, HHS.

ACTION: Notice of public meeting; request for comments.

The Food and Drug Administration (FDA or Agency) is announcing a public meeting entitled ''International Capacity Building with Respect to Food Safety.'' This public meeting will provide interested persons an opportunity to discuss FDA's comprehensive plan to expand the technical, scientific, and regulatory capacity of foreign governments and their respective food industries in countries that export foods to the United States (the ''capacity-building plan''). FDA is developing this plan under the Food Safety Modernization Act (FSMA). More specifically, the public will have an opportunity to provide information and share views that will inform FDA's development of the capacity-building plan. FDA is also establishing a docket to collect comments, data, and information relevant to the capacity-building plan.

Date and Time: See section III. ''How to Participate in the Public Meeting'' in the **SUPPLEMENTARY INFORMATION** section of this document for dates and times of the public meeting, closing dates for advance registration, and information on deadlines for submitting either electronic or written comments to FDA's Division of Dockets Management.

Contact Persons: For questions about registering for the meeting, to register orally, or to submit a notice of participation by mail, Fax, or email: Courtney Treece, Planning Professionals, Ltd., 1210 West McDermott, Suite 111, Allen, TX 75013, 704–258–4983, Fax: 469–854–6992, email: *ctreece@planningprofessionals.com.*

For questions about the content of the public meeting or if special accommodations are needed due to a disability, contact Juanita Yates, Center for Food Safety and Applied Nutrition (HFS–009), Food and Drug Administration, 5100 Paint Branch Pkwy., College Park, MD 20740, 240–402–1731, email: *Juanita.Yates@fda.hhs.gov.*

SUPPLEMENTARY INFORMATION:

I. Background

FSMA (Pub. L. 111–353) establishes the foundation for a modernized food safety system that provides FDA with more authorities to address the increasingly globalized food supply and prevent problems before they occur. The legislation comes at a time when FDA has identified strengthening the safety and integrity of the global supply chain as a key Agency priority. Indeed, two recent reports have focused on the challenges of global supply chains: FDA's ''Pathway to Global Product Safety and Quality,'' and the Institute of Medicine's report ''Ensuring Safe Foods and Medical Products through Regulatory Systems Abroad,'' which was commissioned by FDA. FSMA enhances FDA's efforts to increase the safety of the global supply chain, by, among other things, recognizing the importance of partnerships in the area of imports. Critically, the legislation directs FDA to focus on international food safety capacity—a key prevention-oriented activity. FSMA requires that the Secretary (by delegation, FDA) develop a plan to increase the technical, scientific, and regulatory food safety capacity of foreign governments and their respective food industries in countries that export foods to the United States (Pub. L. 111–353, sec. 305). (To see the full text of section 305 of FSMA, visit: *http://www.fda.gov/Food/FoodSafety/FSMA/ucm247548.htm#SEC305.).*

Further, FDA is required to develop the capacity-building plan in consultation with certain stakeholders, including representatives of the food industry, foreign government officials, nongovernmental organizations that represent the interests of consumers, and certain Federal officials. The Federal officials include the Secretary of Agriculture, the Secretary of State, the Secretary of the Treasury, the Secretary of Homeland Security, the U.S. Trade Representative, and the Secretary of Commerce. FDA is also required to consult with other stakeholders.

The capacity-building plan must include, as appropriate:

1. Recommendations for bilateral and multilateral arrangements and agreements, including providing for responsibilities of exporting countries to ensure food safety;

2. Provisions for secure electronic data sharing;

3. Provisions for mutual recognition of inspection reports;

4. Training of foreign governments and food producers on U.S. requirements for safe food;

5. Recommendations on whether and how to harmonize requirements under the Codex Alimentarius; and

6. Provisions for multilateral acceptance of laboratory methods and testing and detection techniques.

The public meeting is an opportunity for interested persons and stakeholders to share views concerning how FDA should address the six elements in the capacity-building plan. Although section 305 identified these six elements, the list need not be exclusive. Therefore, interested persons may also share views as to whether FDA should consider additional issues in developing the plan. Furthermore, the public meeting is an opportunity for FDA to share the Agency's current thinking on the capacity-building plan. FDA encourages interested persons to provide feedback on any proposals that FDA presents at the public meeting. FDA is also establishing a docket to obtain comments, data, and evidence that will inform the Agency's development of the capacity-building plan. FDA will make available the agenda and other documents prior to the public meeting.

II. Purpose and Format of the Meeting

FDA is holding the public meeting to receive input from the public and from stakeholders to inform FDA's development of the capacity-building plan. This 1-day public meeting will open with a discussion of the context for international food safety capacity building and then proceed with more specific discussions about the capacity-building plan. Throughout the meeting, FDA will provide opportunities for individuals to share their views.

Prior to the public meeting, FDA will post the agenda for the meeting on the Agency's Web site. Interested persons may access the agenda at *http://www.fda.gov/Food/NewsEvents/WorkshopsMeetingsConferences/default.htm.* In addition to posting the agenda, FDA may also make available additional information about the capacity-building plan at this Web site. For general information, interested persons may visit FDA's FSMA International Capacity Building Web page located at *http://www.fda.gov/Food/FoodSafety/FSMA/ucm301708.htm.*

III. How to Participate in the Public Meeting

Stakeholders and interested persons will have the opportunity to provide oral comments. The public meeting will be held from 9 a.m. to 5 p.m. on June 19, 2012, at the L'Enfant Plaza Hotel, 480 L'Enfant Plaza SW., Washington, DC The meeting is open to the public and on-site registration will be available, beginning at 8 a.m. However, attendees are encouraged to register in advance because seating is limited. Individuals who wish to attend the meeting can obtain information on how to register online at *http://www.fda.gov/Food/NewsEvents/WorkshopsMeetingsConferences/default.htm.* There is no fee for registration.

Regardless of attendance at the public meeting, individuals may also share their views by submitting electronic or written comments to FDA's Division of Dockets Management. The deadline for submitting comments to the docket is July 20, 2012. Please note the following important dates:

- June 11, 2012: Closing date for advance registration and requesting special accommodations due to a disability.
- July 20, 2012: Closing date to submit either electronic or written comments to FDA's Division of Dockets Management.

IV. Request for Comments

When submitting electronic or written comments to FDA's Division of Dockets Management, please include the docket number found in brackets in the heading of this document. All comments received by the Agency may be seen in the Division of Dockets Management between 9 a.m. and 4 p.m., Monday through Friday.

V. Transcripts and Recorded Video

Please be advised that as soon as a transcript is available, it will be accessible at *http://www.regulations.gov* and at FDA's FSMA Web site at: *http://www.fda.gov/Food/FoodSafety/FSMA/ucm301708.htm.* It may also be viewed at the Division of Dockets Management (HFA–305), Food and Drug Administration, 5630 Fishers Lane, rm. 1061, Rockville, MD 20852. A transcript will also be available in either hardcopy or on CD–ROM, after submission of a Freedom of Information request. Written requests are to be sent to the Division of Freedom of Information (ELEM–1029), 12420 Parklawn Dr., Element Bldg., Rockville, MD 20857. Additionally, FDA will be video recording the public meeting. Once the recorded video is available, it will be accessible at FDA's FSMA Web site at *http://www.fda.gov/Food/FoodSafety/FSMA/ucm301708.htm.*

Dated: May 10, 2012.

Leslie Kux,

Assistant Commissioner for Policy.

[FR Doc. 2012–12209 Filed 5–18–12; 8:45 am]

BILLING CODE 4160–01–P

DEPARTMENT OF HEALTH AND HUMAN SERVICES

National Institutes of Health

National Institute of Environmental Health Sciences; Notice of Closed Meeting

Pursuant to section 10(d) of the Federal Advisory Committee Act, as amended (5 U.S.C. App.), notice is hereby given of the following meeting.

The meeting will be closed to the public in accordance with the provisions set forth in sections 552b(c)(4) and 552b(c)(6), Title 5 U.S.C., as amended. The grant applications and the discussions could disclose confidential trade secrets or commercial property such as patentable material, and personal information concerning individuals associated with the grant applications, the disclosure of which would constitute a clearly unwarranted invasion of personal privacy.

Name of Committee: National Institute of Environmental Health Sciences Special Emphasis Panel; Virtual Consortium for Translational/Transdisciplinary Environmental Research.

Date: June 12, 2012.

Time: 8:00 a.m. to 6:00 p.m.

Agenda: To review and evaluate grant applications.

Place: Hilton Raleigh-Durham Airport at Research Triangle, 4810 Page Creek Lane, Durham, NC 27703.

Contact Person: Janice B Allen, Ph.D., Scientific Review Administrator, Scientific Review Branch, Division of Extramural Research and Training, Nat. Institute of Environmental Health Science, P.O. Box 12233, MD EC–30/Room 3170 B, Research Triangle Park, NC 27709, 919/541–7556.

(Catalogue of Federal Domestic Assistance Program Nos. 93.115, Biometry and Risk Estimation—Health Risks from Environmental Exposures; 93.142, NIEHS Hazardous Waste Worker Health and Safety Training; 93.143, NIEHS Superfund Hazardous Substances—Basic Research and Education; 93.894, Resources and Manpower Development in the Environmental Health Sciences; 93.113, Biological Response to Environmental Health Hazards; 93.114, Applied Toxicological Research and Testing, National Institutes of Health, HHS)

Dated: May 14, 2012.

Jennifer S. Spaeth,

Director, Office of Federal Advisory Committee Policy.

[FR Doc. 2012–12238 Filed 5–18–12; 8:45 am]

BILLING CODE 4140–01–P

DEPARTMENT OF HEALTH AND HUMAN SERVICES

National Institutes of Health

National Institute of Diabetes and Digestive and Kidney Diseases; Notice of Closed Meeting

Pursuant to section 10(d) of the Federal Advisory Committee Act, as amended (5 U.S.C. App.), notice is hereby given of the following meeting.

The meeting will be closed to the public in accordance with the provisions set forth in sections 552b(c)(4) and 552b(c)(6), Title 5 U.S.C., as amended. The grant applications and the discussions could disclose confidential trade secrets or commercial property such as patentable material, and personal information concerning individuals associated with the grant applications, the disclosure of which would constitute a clearly unwarranted invasion of personal privacy.

Name of Committee: National Institute of Diabetes and Digestive and Kidney Diseases Special Emphasis Panel; Cystic Fibrosis Related Diabetes.

Date: June 19, 2012.

Time: 11:00 a.m. to 4:00 p.m.

Agenda: To review and evaluate grant applications.

Place: National Institutes of Health, Two Democracy Plaza, 6707 Democracy Boulevard, Bethesda, MD 20892, (Telephone Conference Call).

Contact Person: Michele L. Barnard, Ph.D., Scientific Review Officer, Review Branch, DEA, NIDDK, National Institutes of Health, Room 753, 6707 Democracy Boulevard, Bethesda, MD 20892–2542, (301) 594–8898, *barnardm@extra.niddk.nih.gov.*

(Catalogue of Federal Domestic Assistance Program Nos. 93.847, Diabetes, Endocrinology and Metabolic Research; 93.848, Digestive Diseases and Nutrition Research; 93.849, Kidney Diseases, Urology and Hematology Research, National Institutes of Health, HHS)

Dated: May 15, 2012.

Jennifer S. Spaeth,

Director, Office of Federal Advisory Committee Policy.

[FR Doc. 2012–12242 Filed 5–18–12; 8:45 am]

BILLING CODE 4140–01–P

DEPARTMENT OF HEALTH AND HUMAN SERVICES

National Institutes of Health

National Cancer Institute; Notice of Closed Meeting

Pursuant to section 10(d) of the Federal Advisory Committee Act, as amended (5 U.S.C. App.), notice is hereby given of the following meeting.

The meeting will be closed to the public in accordance with the provisions set forth in sections 552b(c)(4) and 552b(c)(6), Title 5 U.S.C., as amended. The grant applications and the discussions could disclose confidential trade secrets or commercial property such as patentable material, and personal information concerning individuals associated with the grant applications, the disclosure of which would constitute a clearly unwarranted invasion of personal privacy.

Name of Committee: National Cancer Institute Initial Review Group; Subcommittee J—Population and Patient-Oriented Training.

Date: June 14, 2012.

Time: 7:30 a.m. to 6:00 p.m.

Agenda: To review and evaluate grant applications.

Place: Westin Alexandria, 400 Courthouse Square, Alexandria, VA 22314.

Contact Person: Ilda M. Mckenna, Ph.D., Scientific Review Officer, Research Training Review Branch, Division of Extramural Activities, National Cancer Institute, 6116 Executive Boulevard, Room 8111, Bethesda, MD 20892, 301–496–7481, *mckennai@mail.nih.gov.*

Any interested person may file written comments with the committee by forwarding the statement to the Contact Person listed on this notice. The statement should include the name, address, telephone number and when applicable, the business or professional affiliation of the interested person.

Information is also available on the Institute's/Center's home page: *http://deainfo.nci.nih.gov/advisory/irg/irg.htm,* where an agenda and any additional information for the meeting will be posted when available.

(Catalogue of Federal Domestic Assistance Program Nos. 93.392, Cancer Construction; 93.393, Cancer Cause and Prevention Research; 93.394, Cancer Detection and Diagnosis Research; 93.395, Cancer Treatment Research; 93.396, Cancer Biology Research; 93.397, Cancer Centers Support; 93.398, Cancer Research Manpower; 93.399, Cancer Control, National Institutes of Health, HHS)

Dated: May 15, 2012.

Jennifer S. Spaeth,

Director, Office of Federal Advisory Committee Policy.

[FR Doc. 2012–12250 Filed 5–18–12; 8:45 am]

BILLING CODE 4140–01–P

DEPARTMENT OF HEALTH AND HUMAN SERVICES

National Institutes of Health

National Institute of General Medical Sciences; Notice of Closed Meeting

Pursuant to section 10(d) of the Federal Advisory Committee Act, as amended (5 U.S.C. App.), notice is hereby given of the following meeting.

The meeting will be closed to the public in accordance with the provisions set forth in sections 552b(c)(4) and 552b(c)(6), Title 5 U.S.C., as amended. The grant applications and the discussions could disclose confidential trade secrets or commercial property such as patentable material, and personal information concerning individuals associated with the grant applications, the disclosure of which would constitute a clearly unwarranted invasion of personal privacy.

Name of Committee: National Institute of General Medical Sciences Special Emphasis Panel; COBRE (P20).

Date: June 12–13, 2012.

Time: 8:00 a.m. to 5:00 p.m.

Agenda: To review and evaluate grant applications.

Place: Doubletree Hotel Bethesda, (Formerly Holiday Inn Select), 8120 Wisconsin Avenue, Bethesda, MD 20814.

Contact Person: Steven Birken, Ph.D., Scientific Review Officer, Office of Scientific Review, National Institute of General Medical Sciences, National Institutes of Health, 1 Democracy Plaza, 6701 Democracy Boulevard, Room 1078, Bethesda, MD 20892, 301–435–0815, *birkens@mail.nih.gov.*

(Catalogue of Federal Domestic Assistance Program Nos. 93.375, Minority Biomedical Research Support; 93.821, Cell Biology and Biophysics Research; 93.859, Pharmacology, Physiology, and Biological Chemistry Research; 93.862, Genetics and Developmental Biology Research; 93.88, Minority Access to Research Careers; 93.96, Special Minority Initiatives, National Institutes of Health, HHS)

Dated: May 15, 2012.

Jennifer S. Spaeth,

Director, Office of Federal Advisory Committee Policy.

[FR Doc. 2012–12249 Filed 5–18–12; 8:45 am]

BILLING CODE 4140–01–P

DEPARTMENT OF HEALTH AND HUMAN SERVICES

National Institutes of Health

National Institute of General Medical Sciences; Notice of Closed Meeting

Pursuant to section 10(d) of the Federal Advisory Committee Act, as amended (5 U.S.C. App.), notice is hereby given of the following meeting.

The meeting will be closed to the public in accordance with the provisions set forth in sections 552b(c)(4) and 552b(c)(6), Title 5 U.S.C., as amended. The grant applications and the discussions could disclose confidential trade secrets or commercial property such as patentable material, and personal information concerning individuals associated with the grant applications, the disclosure of which would constitute a clearly unwarranted invasion of personal privacy.

Name of Committee: National Institute of General Medical Sciences Special Emphasis Panel; Review of P01 Review Applications.

Date: June 1, 2012.

Time: 1:00 p.m. to 3:00 p.m.

Agenda: To review and evaluate grant applications.

Place: National Institutes of Health, Natcher Building, 45 Center Drive, Room 3An18, Bethesda, MD 20892.

Contact Person: C. Craig Hyde, Ph.D., Scientific Review Officer, Office of Scientific Review, National Institute of General Medical Sciences, National Institutes of Health, 45 Center Drive, Room 3An18, Bethesda, MD 20892, 301–435–3825, *ch2@nih.gov.*

This notice is being published less than 30 days prior to the meeting due to the timing limitations imposed by the availability of the reviewers.

(Catalogue of Federal Domestic Assistance Program Nos. 93.375, Minority Biomedical Research Support; 93.821, Cell Biology and Biophysics Research; 93.859, Pharmacology, Physiology, and Biological Chemistry Research; 93.862, Genetics and Developmental Biology Research; 93.88, Minority Access to Research Careers; 93.96, Special Minority Initiatives, National Institutes of Health, HHS)

Dated: May 15, 2012.

Jennifer S. Spaeth,

Director, Office of Federal Advisory Committee Policy.

[FR Doc. 2012–12247 Filed 5–18–12; 8:45 am]

BILLING CODE 4140–01–P

DEPARTMENT OF HEALTH AND HUMAN SERVICES

National Institutes of Health

National Institute on Aging; Notice of Closed Meeting

Pursuant to section 10(d) of the Federal Advisory Committee Act, as amended (5 U.S.C. App.), notice is hereby given of the following meeting.

The meeting will be closed to the public in accordance with the provisions set forth in sections 552b(c)(4) and 552b(c)(6), Title 5 U.S.C., as amended. The grant applications and the discussions could disclose confidential trade secrets or commercial property such as patentable material, and personal information concerning individuals associated with the grant applications, the disclosure of which would constitute a clearly unwarranted invasion of personal privacy.

Name of Committee: National Institute on Aging Initial Review Group; Neuroscience of Aging Review Committee.

Date: June 7–8, 2012.

Time: 4:00 p.m. to 2:00 p.m.

Agenda: To review and evaluate grant applications.

Place: Marina del Rey Hotel, 13534 Bali Way, Marina del Rey, CA 90292.

Contact Person: William Cruce, Ph.D., National Institute on Aging, Scientific Review Office, Gateway Building 2C–212, 7201 Wisconsin Ave., Bethesda, MD 20814, 301–402–7704, *crucew@nia.nih.gov.*

This notice is being published less than 15 days prior to the meeting due to the timing limitations imposed by the review and funding cycle.

(Catalogue of Federal Domestic Assistance Program Nos. 93.866, Aging Research, National Institutes of Health, HHS)

Dated: May 15, 2012.

Jennifer S. Spaeth,

Director, Office of Federal Advisory Committee Policy.

[FR Doc. 2012–12245 Filed 5–18–12; 8:45 am]

BILLING CODE 4140–01–P

DEPARTMENT OF HEALTH AND HUMAN SERVICES

National Institutes of Health

National Institute of Allergy and Infectious Diseases; Notice of Closed Meeting

Pursuant to section 10(d) of the Federal Advisory Committee Act, as amended (5 U.S.C. App.), notice is hereby given of the following meeting.

The meeting will be closed to the public in accordance with the provisions set forth in sections 552b(c)(4) and 552b(c)(6), Title 5 U.S.C., as amended. The contract proposals and the discussions could disclose confidential trade secrets or commercial property such as patentable material, and personal information concerning individuals associated with the contract proposals, the disclosure of which would constitute a clearly unwarranted invasion of personal privacy.

Name of Committee: National Institute of Allergy and Infectious Diseases Special Emphasis Panel; NIAID Peer Review Meeting.

Date: June 14, 2012.

Time: 1:00 p.m. to 5:00 p.m.

Agenda: To review and evaluate contract proposals.

Place: National Institutes of Health, 6700B Rockledge Drive, Bethesda, MD 20817, (Telephone Conference Call).

Contact Person: Vasundhara Varthakavi, Ph.D., DVM, Scientific Review Officer, Scientific Review Program, DEA/NIAID/NIH/DHHS, Room 2217, 6700–B Rockledge Drive, Bethesda, MD 20892–7616, 301–496–2550, *varthakaviv@niaid.nih.gov.*

(Catalogue of Federal Domestic Assistance Program Nos. 93.855, Allergy, Immunology, and Transplantation Research; 93.856, Microbiology and Infectious Diseases Research, National Institutes of Health, HHS)

Dated: May 15, 2012.

Jennifer S. Spaeth,

Director, Office of Federal Advisory Committee Policy.

[FR Doc. 2012–12243 Filed 5–18–12; 8:45 am]

BILLING CODE 4140–01–P

DEPARTMENT OF HEALTH AND HUMAN SERVICES

National Institutes of Health

Center for Scientific Review Notice of Closed Meetings

Pursuant to section 10(d) of the Federal Advisory Committee Act, as amended (5 U.S.C. App.), notice is hereby given of the following meetings.

The meetings will be closed to the public in accordance with the provisions set forth in sections 552b(c)(4) and 552b(c)(6), Title 5 U.S.C., as amended. The grant applications and the discussions could disclose confidential trade secrets or commercial property such as patentable material, and personal information concerning individuals associated with the grant applications, the disclosure of which would constitute a clearly unwarranted invasion of personal privacy.

Name of Committee: Molecular, Cellular and Developmental Neuroscience Integrated Review Group; Cellular and Molecular Biology of Glia Study Section.

Date: June 14, 2012.

Time: 8:00 a.m. to 7:00 p.m.

Agenda: To review and evaluate grant applications.

Place: InterContinental Chicago Hotel, 505 North Michigan Avenue, Chicago, IL 60611.

Contact Person: Toby Behar, Ph.D., Scientific Review Officer, Center for Scientific Review, National Institutes of Health, 6701 Rockledge Drive, Room 4136, MSC 7850, Bethesda, MD 20892, (301) 435–4433, *behart@csr.nih.gov.*

Name of Committee: Molecular, Cellular and Developmental Neuroscience Integrated Review Group; Biophysics of Neural Systems Study Section.

Date: June 14, 2012.

Time: 8:00 a.m. to 7:00 p.m.

Agenda: To review and evaluate grant applications.

Place: The Dupont Hotel, 1500 New Hampshire Avenue NW., Washington, DC 20036.

Contact Person: Geoffrey G Schofield, Ph.D., Scientific Review Officer, Center for Scientific Review, National Institutes of Health, 6701 Rockledge Drive, Room 4040–A, MSC 7850, Bethesda, MD 20892, 301–435–1235, *geoffreys@csr.nih.gov.*

Name of Committee: Center for Scientific Review Special Emphasis Panel; Member Conflict: Skeletal Biology and Biomaterials.

Date: June 14–15, 2012.

Time: 8:00 a.m. to 6:00 p.m.

Agenda: To review and evaluate grant applications.

Place: National Institutes of Health, 6701 Rockledge Drive, Bethesda, MD 20892, (Virtual Meeting).

Contact Person: Aruna K Behera, Ph.D., Scientific Review Officer, Center for Scientific Review, National Institutes of Health, 6701 Rockledge Drive, Room 4211, MSC 7814, Bethesda, MD 20892, 301–435–6809, *beheraak@csr.nih.gov.*

Name of Committee: Center for Scientific Review Special Emphasis Panel; Pathophysiology and Clinical Studies of Osteonecrosis of the Jaw.

Date: June 14, 2012.

Time: 9:00 a.m. to 1:00 p.m.

Agenda: To review and evaluate grant applications.

Place: Marina del Rey Hotel, 13534 Bali Way, Marina del Rey, CA 90292.

Contact Person: Yi-Hsin Liu, Ph.D., Scientific Review Officer, Center for Scientific Review, National Institutes of Health, 6701 Rockledge Drive, Room 4214, MSC 7814, Bethesda, MD 20892, 301–435–1781, *liuyh@csr.nih.gov.*

Name of Committee: Center for Scientific Review Special Emphasis Panel; Biological Chemistry and Macromolecular Biophysics.

Date: June 14, 2012.

Time: 10:00 a.m. to 2:00 p.m.

Agenda: To review and evaluate grant applications.

Place: National Institutes of Health, 6701 Rockledge Drive, Bethesda, MD 20892, (Telephone Conference Call).

Contact Person: James W Mack, Ph.D., Scientific Review Officer, Center for Scientific Review, National Institutes of Health, 6701 Rockledge Drive, Room 4154, MSC 7806, Bethesda, MD 20892, (301) 435–2037, *mackj2@csr.nih.gov.*

Name of Committee: Center for Scientific Review Special Emphasis Panel; Member Conflict: Immune Mechanism.

Date: June 15, 2012.

Time: 8:00 a.m. to 5:00 p.m.

Agenda: To review and evaluate grant applications.

Place: Hyatt Regency Bethesda, One Bethesda Metro Center, 7400 Wisconsin Avenue, Bethesda, MD 20814.

Contact Person: Scott Jakes, Ph.D., Scientific Review Officer, Center for Scientific Review, National Institutes of Health, 6701 Rockledge Drive, Room 4198, MSC 7812, Bethesda, MD 20892, 301–495–1506, *jakesse@mail.nih.gov.*

Name of Committee: Center for Scientific Review Special Emphasis Panel; Small Business: Non-HIV Microbial Vaccine Development.

Date: June 15, 2012.

Time: 8:00 a.m. to 5:00 p.m.

Agenda: To review and evaluate grant applications.

Place: Hyatt Regency Bethesda, One Bethesda Metro Center, 7400 Wisconsin Avenue, Bethesda, MD 20814.

Contact Person: Scott Jakes, Ph.D., Scientific Review Officer, Center for Scientific Review, National Institutes of Health, 6701 Rockledge Drive, Room 4198, MSC 7812, Bethesda, MD 20892, 301–495–1506, *jakesse@mail.nih.gov.*

Name of Committee: Center for Scientific Review Special Emphasis Panel; RFA Panel: Understanding and Promoting Health Literacy.

Date: June 15, 2012.

Time: 8:00 a.m. to 2:00 p.m.

Agenda: To review and evaluate grant applications.

Place: Hilton Silver Spring, 8727 Colesville Road, Silver Spring, MD 20910.

Contact Person: Rebecca Henry, Ph.D., Scientific Review Officer, Center for Scientific Review, National Institutes of Health, 6701 Rockledge Drive, Room 3222, MSC 7808, Bethesda, MD 20892, 301–435–1717, *henryrr@mail.nih.gov.*

(Catalogue of Federal Domestic Assistance Program Nos. 93.306, Comparative Medicine; 93.333, Clinical Research, 93.306, 93.333, 93.337, 93.393–93.396, 93.837–93.844, 93.846–93.878, 93.892, 93.893, National Institutes of Health, HHS)

Dated: May 14, 2012.

Jennifer S. Spaeth,

Director, Office of Federal Advisory Committee Policy.

[FR Doc. 2012–12240 Filed 5–18–12; 8:45 am]

BILLING CODE 4140–01–P

DEPARTMENT OF HOMELAND SECURITY

U.S. Customs and Border Protection

Agency Information Collection Activities: Application To Use the Automated Commercial Environment (ACE)

AGENCY: U.S. Customs and Border Protection, Department of Homeland Security.

ACTION: 30-Day notice and request for comments; Extension of an existing information collection.

SUMMARY: U.S. Customs and Border Protection (CBP) of the Department of Homeland Security will be submitting the following information collection request to the Office of Management and Budget (OMB) for review and approval in accordance with the Paperwork Reduction Act: Application to Use the Automated Commercial Environment (ACE). This is a proposed extension of an information collection that was previously approved. CBP is proposing that this information collection be extended with no change to the burden hours. This document is published to obtain comments from the public and affected agencies. This information collection was previously published in the **Federal Register** (77 FR 14535) on March 12, 2012, allowing for a 60-day comment period. This notice allows for an additional 30 days for public comments. This process is conducted in accordance with 5 CFR 1320.10.

DATES: Written comments should be received on or before June 20, 2012.

ADDRESSES: Interested persons are invited to submit written comments on this information collection to the Office of Information and Regulatory Affairs, Office of Management and Budget. Comments should be addressed to the OMB Desk Officer for U.S. Customs and Border Protection, Department of Homeland Security, and sent via electronic mail to *oira_submission@omb.eop.gov* or faxed to (202) 395–5806.

FOR FURTHER INFORMATION CONTACT: Requests for additional information should be directed to Tracey Denning, U.S. Customs and Border Protection, Regulations and Rulings, Office of International Trade, 799 9th Street NW., 5th Floor, Washington, DC 20229–1177, at 202–325–0265.

SUPPLEMENTARY INFORMATION: CBP invites the general public and affected Federal agencies to submit written comments and suggestions on proposed and/or continuing information collection requests pursuant to the Paperwork Reduction Act (Pub. L. 104–13). Your comments should address one of the following four points:

(1) Evaluate whether the proposed collection of information is necessary for the proper performance of the functions of the agency/component, including whether the information will have practical utility;

(2) Evaluate the accuracy of the agencies/components estimate of the burden of the proposed collection of information, including the validity of the methodology and assumptions used;

(3) Enhance the quality, utility, and clarity of the information to be collected; and

(4) Minimize the burden of the collections of information on those who are to respond, including the use of appropriate automated, electronic, mechanical, or other technological techniques or other forms of information.

Title: Application to Use ACE.

OMB Number: 1651–0105.

Form Number: None.

Abstract: The Automated Commercial Environment (ACE) is a trade processing system that will eventually replace the Automated Commercial System (ACS), the current import system for U.S. Customs and Border Protection (CBP) operations. ACE supports government agencies and the trade community with border-related missions with respect to moving goods across the border efficiently and securely. Once ACE is fully implemented, all related CBP trade functions and the trade community will be supported from a single common user interface. The CBP transition to ACE began in October 2003 with the launch of the ACE Secure Data Portal, a customized web page that provides a single, user-friendly gateway to access CBP information via the internet for CBP, the trade community and participating Government agencies. In order to participate in the various ACE pilots, companies and/or individuals are required to submit basic information to CBP such as: Their name, their employer identification number (EIN) or social security number, standard carrier alpha code (SCAC), and a statement certifying their capability to connect to the internet. The application for the ACE Secure Data Portal is accessible at: *http://www.cbp.gov/linkhandler/cgov/trade/automated/modernization/ace_app_info/ace_portal_app.ctt/ace_portal_app.pdf.*

Action: CBP proposes to extend the expiration date of this information collection with no change to the burden hours or to the information collected.

Type of Review: Extension (without change).

Affected Public: Businesses.

Estimated Number of Respondents: 21,000.

Estimated Time per Response: 20 minutes.

Estimated Total Annual Burden Hours: 6,930.

Dated: May 15, 2012.

Tracey Denning,

Agency Clearance Officer, U.S. Customs and Border Protection.

[FR Doc. 2012–12175 Filed 5–18–12; 8:45 am]

BILLING CODE 9111–14–P

DEPARTMENT OF THE INTERIOR

[Docket No. ONRR–2012–0003]

U.S. Extractive Industries Transparency Initiative Stakeholder Assessment Public Listening Sessions, Webinar and Workshop

AGENCY: Office of the Secretary, Interior.

ACTION: Notice.

SUMMARY: On May 3, 2012, The Department of the Interior (Interior) published a **Federal Register** Notice (77 FR 26315) announcing the May 18 publication of the United States Extractive Industries Transparency Initiative Stakeholder Assessment and Multi-Stakeholder Group Options. In that notice, Interior announced it would also initiate a public comment period regarding the Assessment, starting May 18, to include public listening sessions, a webinar and a workshop, the details of which would be provided on the Interior Web site and in this **Federal Register** Notice.

DATES: Submit written comments on or before June 29th, 2012.

The public listening sessions, webinar and workshop dates, times and locations are:

Session 1—Anchorage, Alaska Public Listening Session, 6:00–8:00 pm ADT, May 30, 2012, Bureau of Ocean Energy Management, 3801 Centerpoint Drive, Suite 100, Anchorage, AK 99503–5820, tel. 907–334–5200

Session 2—Public Webinar, 1:00–3:00 pm EDT, June 1, 2012, see *www.doi.gov/eiti/for details*

Session 3—Pittsburgh, Pennsylvania Public Listening Session, 1:00–3:00 pm EDT, June 11, 2012, Office of Surface Mining Reclamation and Enforcement, Building 3, Parkway Center, Conference Room, 2nd Floor, Pittsburgh, PA 15220, tel. 412–937–2828

Session 4—New Orleans, Louisiana Public Listening Session, 1:00–3:00 pm CDT, June 12, 2012, Bureau of Ocean Energy Management, 1201 Elmwood Park Boulevard, Room 135, New Orleans, LA 70123–2394, tel. 800–200–4853

Session 5—Washington, DC Public Workshop, 10:00am–4:00 pm EDT, June 22, 2012, U.S. Department of the Interior, 1849 C St., NW., Rooms 7000A and B, Washington, DC 20240, tel. 202–254–5573

FOR FURTHER INFORMATION CONTACT: Ben Nussdorf, telephone (202) 254–5573, fax number (202) 254–5589, email *benjamin.nussdorf@onrr.gov.*

SUPPLEMENTARY INFORMATION: On February 24th, 2012, Interior published a notice in the **Federal Register** seeking public comment on the formation of a multi-stakeholder group to implement USEITI (74 FR 11151). In that notice, Interior stated that it would hold a series of public listening sessions to provide additional opportunities for public comment. In March, Interior held those listening sessions in St. Louis, Missouri; Denver, Colorado; Houston, Texas; and Washington, DC The Consensus Building Institute (CBI), an independent third-party facilitator, analyzed the input from these four public listening sessions, interviews with potential stakeholders, and written comments that were submitted to Interior. This input has formed the basis of CBI's independent stakeholder assessment and findings regarding options for establishing the U.S. multi-stakeholder group, which will be responsible for implementing USEITI.

Starting May 18, the CBI stakeholder assessment will be available online at *www.doi.gov/EITI.* Alternatively, you may request a copy of the assessment from Ben Nussdorf, whose contact information is listed previously in this notice. We encourage stakeholders and members of the public to participate in public comment period from May 18–

June 29, 2012, to provide feedback on the stakeholder assessment and recommended options for establishing the U.S. multi-stakeholder group. During the May 18–June 29 public comment period, three public listening sessions, a public webinar, and a public workshop will be held as listed previously in this notice. Details on participating in the webinar will be available from Ben Nussdorf and online at *www.doi.gov/EITI.*

Background: In September 2011, President Barack Obama announced the United States' commitment to participate in the Extractive Industries Transparency Initiative. EITI is a signature initiative of the U.S. National Action Plan for the international Open Government Partnership and offers a voluntary framework for governments and companies to publicly disclose in parallel the revenues paid and received for extraction of oil, gas and minerals owned by the state. The design of each framework is country-specific, and is developed through a multi-year, consensus based process by a multi-stakeholder group comprised of government, industry and civil society representatives. On October 25, President Obama named Secretary of the Interior Ken Salazar as the U.S. Senior Official responsible for implementing USEITI. In response, Secretary Salazar posted a White House blog the same day, committing to work with industry and civil society to implement USEITI. For further information on EITI, please visit the USEITI Web page at *http://www.doi.gov/EITI.*

Dated: May 16, 2012.

Amy Holley,

Acting Assistant Secretary, Policy, Management and Budget.

[FR Doc. 2012–12303 Filed 5–17–12; 11:15 am]

BILLING CODE 4310–T2–P

DEPARTMENT OF THE INTERIOR

Bureau of Land Management

[LLAK–963000–L1410000–ET0000; AA–93209]

Notice of Withdrawal Application and Opportunity for Public Meeting; Alaska

AGENCY: Bureau of Land Management, Interior.

ACTION: Notice.

SUMMARY: The United States Air Force has filed an application with the Bureau of Land Management (BLM) requesting that the Secretary of the Interior withdraw approximately 640 acres of public land from settlement, sale, location, and entry under the public land laws, including the United States mining laws, but not from the mineral leasing laws, to protect the United States Air Force King Salmon Station. This notice gives the public an opportunity to comment on the proposed action and to request a public meeting.

DATES: Comments and requests for a public meeting must be received by August 20, 2012.

ADDRESSES: Comments and meeting requests should be sent to the Alaska State Director, BLM Alaska State Office, 222 West Seventh Avenue, No. 13, Anchorage, Alaska 99513–7504.

FOR FURTHER INFORMATION CONTACT: Mark Fullmer, BLM Alaska State Office, 907–271–5699 or at the address above. Persons who use a telecommunications device for the deaf (TDD) may call the Federal Information Relay Service (FIRS) at 1–800–877–8339 to contact the above individual during normal business hours. The FIRS is available 24 hours a day, 7 days a week, to leave a message or question with the above individual. You will receive a reply during normal business hours.

SUPPLEMENTARY INFORMATION: The United States Air Force requests that the Secretary of the Interior, pursuant to Section 204 of the Federal Land Policy and Management Act of 1976, 43 U.S.C. 1714, withdraw the following described land for a period of 20 years from settlement, sale, location, and entry under the public land laws, including the United States mining laws, but not from leasing under the mineral leasing laws, subject to valid existing rights:

This withdrawal application is located within:

Seward Meridian

(a) Demolition Area

T. 17 S., R. 44 W.,
Sec. 33, S½NW¼ and N½N½SW¼.

The area described contains 120 acres.

(b) Petroleum, Oils, and Lubricants Tank Farm

T. 17 S., R. 45 W.,
Sec. 22, N½NW¼SE¼ and N½S½NW¼SE¼.

The area described contains 30 acres.

(c) Main Base Area

T. 17 S., R. 45 W.,
Sec. 23, NE¼, N½NW¼, SE¼NW¼, and N½SE¼.

The area described contains 360 acres.

(d) Radar Site

T. 17 S., R. 45 W.,
Sec. 24, S½N½SE¼SW¼, S½SE¼SW¼, and SW¼SW¼SE¼;
Sec. 25, W½NW¼NE¼, W½NW¼SW¼NE¼, NE¼NW¼SW¼NE¼, SW¼SW¼SW¼NE¼, NE¼NW¼, and N½SE¼NW¼.

The areas described aggregate 130 acres.

The total of the areas described aggregate 640 acres.

Records pertaining to the application can be examined in the BLM Alaska State Office at the address shown above. The land was previously segregated by Public Land Order No. 6893 on October 18, 1991, (56 FR 52210 (1991)) which subsequently expired October 17, 2011.

The withdrawal application would not alter the applicability of those public land laws governing the use of land under lease, license, or permit or governing the disposal of the mineral or vegetative resources other than under the mining laws.

The use of a right-of-way or interagency or cooperative agreement would not adequately protect the Federal interest in the King Salmon Air Force Station.

There are no suitable alternative sites available that could be substituted for the above described public land, since the King Salmon Air Force Station is unique.

No water rights would be needed to fulfill the purpose of the requested withdrawal application.

For a period of 90 days from the date of publication of this notice, all persons who wish to submit comments, suggestions, or objections in connection with the withdrawal application may present their views in writing to the BLM Alaska State Director at the address indicated above. Before including your address, phone number, email address, or other personal identifying information in your comment, you should be aware that your entire comment—including your personal identifying information—may be made publicly available at any time. While you can ask us in your comment to withhold your personal identifying information from public review, we cannot guarantee that we will be able to do so.

Notice is hereby given that an opportunity for a public meeting is afforded in connection with the withdrawal application. All interested parties who desire a public meeting for the purpose of being heard on the withdrawal application must submit a written request to the BLM Alaska State Director within 90 days from the date of publication of this notice. Upon determination by the authorized officer that a public meeting will be held, a notice of the time and place will be published in the **Federal Register** and at least one local newspaper at least 30 days before the scheduled date of the meeting.

The withdrawal application will be processed in accordance with the regulations set forth at 43 CFR part 2300 and is subject to Section 810 of the Alaska National Interest Lands Conservation Act, (16 U.S.C. 3120).

Authority: 43 CFR 2310.3–1(b).

Mark Fullmer,

Acting Chief, Branch of Lands and Realty.

[FR Doc. 2012–12231 Filed 5–18–12; 8:45 am]

BILLING CODE 1410–JA–P

DEPARTMENT OF THE INTERIOR

Bureau of Land Management

[SDM 79849]

Notice of Proposed Withdrawal Extension and Opportunity for Public Meeting; South Dakota

AGENCY: Bureau of Land Management, Interior.

ACTION: Notice.

SUMMARY: The United States Department of Agriculture (USDA), Forest Service, has filed an application with the Department of the Interior, Bureau of Land Management, to extend the duration of Public Land Order (PLO) No. 7174 for an additional 20-year term. PLO No. 7174 withdrew approximately 35 acres of National Forest System lands in the Black Hills National Forest from location and entry under the United States mining laws to protect recreational values and the investment of Federal funds at the Pactola Visitor Information Center, Pactola Marina North, and Pactola Marina South. The withdrawal created by PLO No. 7174 will expire on November 27, 2015, unless extended. This notice also gives the public an opportunity to comment on the proposed withdrawal extension and to request a public meeting.

DATES: Comments and requests for a public meeting must be received by August 20, 2012.

ADDRESSES: Comments and meeting requests should be sent to the Regional Forester, USDA Forest Service, Rocky Mountain Region, 740 Simms Street, Golden, Colorado 80401, or the Montana State Director, Bureau of Land Management, 5001 Southgate Drive, Billings, Montana 59101–4669.

FOR FURTHER INFORMATION CONTACT: Valerie Hunt, USDA Forest Service, Rocky Mountain Region, 740 Simms Street, Golden, Colorado 80401, 303–275–5071, *vbhunt@fs.fed.us,* or Sandra Ward, Bureau of Land Management, 5001 Southgate Drive, Billings, Montana 59101–4669, 406–896–5052, *sward@blm.gov.* Persons who use a telecommunications device for the deaf (TDD) may call the Federal Information Relay Service (FIRS) at 1–800–877–8339 to contact either of the above individuals during normal business hours. The FIRS is available 24 hours a day, 7 days a week, to leave a message or question with either of the above individuals. You will receive a reply during normal business hours.

SUPPLEMENTARY INFORMATION: The USDA Forest Service filed an application requesting that the Secretary of the Interior extend PLO No. 7174 (60 FR 58521 (1995)), which withdrew approximately 35 acres of National Forest System lands located in the Black Hills National Forest from location and entry under the United States mining laws, but not from leasing under the mineral leasing laws, for an additional 20-year term, subject to valid existing rights. PLO No. 7174 is incorporated herein by reference.

The purpose of the proposed withdrawal extension is to continue to protect recreational values and the investment of Federal funds at the Pactola Visitor Information Center, Pactola Marina North, and Pactola Marina South.

The use of a right-of-way, interagency agreement, or cooperative agreement would not provide adequate protection.

There are no suitable alternative sites available. There are no other Federal lands in the area containing these recreational opportunities and improvements.

No water rights will be needed to fulfill the purpose of the requested withdrawal extension.

On or before August 20, 2012, all persons who wish to submit comments, suggestions, or objections in connection with the proposed withdrawal extension may present their views in writing to the Regional Forester, USDA Forest Service, Rocky Mountain Region, 740 Simms Street, Golden, Colorado 80401.

Comments, including names and street addresses of respondents, will be available for public review at the USDA Forest Service, Forest Supervisor's Office, Black Hills National Forest, 1019 North 5th Street, Custer, South Dakota 57730, and the Bureau of Land Management, Montana State Office, 5001 Southgate Drive, Billings, Montana, 59101–4669 during regular business hours.

Individual respondents may request confidentiality. Before including your address, phone number, email address, or other personal identifying information in your comments, be advised that your entire comment—including your personal identifying information—may be made publicly available at any time. While you can ask us in your comment to withhold from public review your personal identifying information, we cannot guarantee that we will be able to do so.

Notice is hereby given that an opportunity for a public meeting is afforded in connection with the proposed withdrawal extension. All interested persons who desire a public meeting for the purpose of being heard on the proposed withdrawal must submit a written request to the Regional Forester, USDA Forest Service, Rocky Mountain Region, 740 Simms Street, Golden, Colorado 80401 by August 20, 2012. Upon determination by the authorized officer that a public meeting will be held, a notice of the time and place will be published in the **Federal Register** and at least one local newspaper not less than 30 days before the scheduled date of the meeting.

This application will be processed in accordance with the applicable regulations set forth in 43 CFR 2310.4.

Authority: 43 CFR 2310.3–1.

Gary P. Smith,

Acting Chief, Branch of Land Resources.

[FR Doc. 2012–12234 Filed 5–18–12; 8:45 am]

BILLING CODE 3410–11–P

JUDICIAL CONFERENCE OF THE UNITED STATES

Meeting of the Judicial Conference Advisory Committee on Rules of Criminal Procedure

AGENCY: Judicial Conference of the United States.

ACTION: Notice of open meeting.

SUMMARY: The Advisory Committee on Rules of Criminal Procedure will hold a two-day meeting. The meeting will be open to public observation but not participation.

DATES: October 29–30, 2012.

Time: 8:30 a.m. to 5 p.m.

ADDRESSES: Thurgood Marshall Federal Judiciary Building, Mecham Conference Center, One Columbus Circle NE., Washington, DC 20544.

FOR FURTHER INFORMATION CONTACT: Benjamin J. Robinson, Deputy Rules Officer and Counsel, Administrative Office of the United States Courts, Washington, DC 20544, telephone (202) 502–1820.

Dated: May 16, 2012.

Benjamin J. Robinson,

Deputy Rules Officer and Counsel.

[FR Doc. 2012–12255 Filed 5–16–12; 4:15 pm]

BILLING CODE 2210–55–P

JUDICIAL CONFERENCE OF THE UNITED STATES

Meeting of the Judicial Conference Advisory Committee on Rules of Bankruptcy Procedure

AGENCY: Judicial Conference of the United States.

ACTION: Notice of open meeting.

SUMMARY: The Advisory Committee on Rules of Bankruptcy Procedure will hold a two-day meeting. The meeting will be open to public observation but not participation.

DATES: September 20–21, 2012.

Time: 8:30 a.m. to 5 p.m.

ADDRESSES: Hotel Monaco Portland, 506 SW Washington Street, Portland, OR 97204.

FOR FURTHER INFORMATION CONTACT: Benjamin J. Robinson, Deputy Rules Officer and Counsel, Administrative Office of the United States Courts, Washington, DC 20544, telephone (202) 502–1820.

Dated: May 16, 2012.

Benjamin J. Robinson,

Deputy Rules Officer and Counsel.

[FR Doc. 2012–12258 Filed 5–16–12; 4:15 pm]

BILLING CODE 2210–55–P

JUDICIAL CONFERENCE OF THE UNITED STATES

Meeting of the Judicial Conference Committee on Rules of Practice and Procedure

AGENCY: Judicial Conference of the United States.

ACTION: Notice of open meeting.

SUMMARY: The Committee on Rules of Practice and Procedure will hold a two-day meeting. The meeting will be open to public observation but not participation.

DATES: June 11–12, 2012.

Time: 8:30 a.m. to 5 p.m.

ADDRESSES: Thurgood Marshall Federal Judiciary Building, Mecham Conference Center, One Columbus Circle NE., Washington, DC 20544.

FOR FURTHER INFORMATION CONTACT: Benjamin J. Robinson, Deputy Rules Officer and Counsel, Administrative Office of the United States Courts, Washington, DC 20544, telephone (202) 502–1820.

Dated: May 16, 2012.

Benjamin J. Robinson,

Deputy Rules Officer and Counsel.

[FR Doc. 2012–12266 Filed 5–16–12; 4:15 pm]

BILLING CODE 2210–55–P

DEPARTMENT OF JUSTICE

Drug Enforcement Administration

Importer of Controlled Substances; Notice of Application; Stepan Company

This is notice that on February 27, 2012, Stepan Company, Natural Products Department, 100 W. Hunter Avenue, Maywood, New Jersey 07607, made application by renewal to the Drug Enforcement Administration (DEA) for registration as an importer of Coca Leaves (9040), a basic class of controlled substance listed in schedule II.

The company plans to import the listed controlled substance to manufacture bulk controlled substance for distribution to its customer.

Comments and requests for hearings on applications to import narcotic raw material are not appropriate. 72 FR 3417 (2007).

As noted in a previous notice published in the **Federal Register** on September 23, 1975, 40 FR 43745, all applicants for registration to import a basic class of any controlled substance in schedule I or II are, and will continue to be, required to demonstrate to the Deputy Assistant Administrator, Office of Diversion Control, Drug Enforcement Administration, that the requirements for such registration pursuant to 21 U.S.C. 958(a); 21 U.S.C. 823(a); and 21 CFR 1301.34(b), (c), (d), (e), and (f) are satisfied.

Dated: May 11, 2012.

Joseph T. Rannazzisi,

Deputy Assistant Administrator, Office of Diversion Control, Drug Enforcement Administration.

[FR Doc. 2012–12248 Filed 5–18–12; 8:45 am]

BILLING CODE 4410–09–P

DEPARTMENT OF JUSTICE

Drug Enforcement Administration

Importer of Controlled Substances; Notice of Registration; Formulation Technologies, LLC

By Notice dated January 26, 2012, and published in the **Federal Register** on February 6, 2012, 77 FR 5845, Formulation Technologies, LLC., 11501 Domain Drive, Suite 130, Austin, Texas 78758, made application by renewal to the Drug Enforcement Administration (DEA) to be registered as an importer of Fentanyl (9801), a basic class of controlled substance listed in schedule II.

The company plans to import the listed controlled substance for analytical research and clinical trials.

No comments or objections have been received. DEA has considered the factors in 21 U.S.C. 823(a) and 952(a) and determined that the registration of Formulation Technologies, LLC. to import the basic class of controlled substance is consistent with the public interest and with United States obligations under international treaties, conventions, or protocols in effect on May 1, 1971. DEA has investigated Formulation Technologies, LLC. to ensure that the company's registration is consistent with the public interest. The investigation has included inspection and testing of the company's physical security systems, verification of the company's compliance with state and local laws, and a review of the company's background and history. Therefore, pursuant to 21 U.S.C. 952(a) and 958(a), and in accordance with 21 CFR 1301.34, the above named company is granted registration as an importer of the basic class of controlled substance listed.

Dated: May 11, 2012.

Joseph T. Rannazzisi,

Deputy Assistant Administrator, Office of Diversion Control, Drug Enforcement Administration.

[FR Doc. 2012–12241 Filed 5–18–12; 8:45 am]

BILLING CODE 4410–09–P

DEPARTMENT OF JUSTICE

Drug Enforcement Administration

Manufacturer of Controlled Substances; Notice of Application; Agilent Technologies

Pursuant to § 1301.33(a), Title 21 of the Code of Federal Regulations (CFR), this is notice that on April 11, 2012, Agilent Technologies, 25200 Commercentre Drive, Lake Forest, California 92630–8810, made application by renewal to the Drug Enforcement Administration (DEA) to be registered as a bulk manufacturer of the basic classes of controlled substances listed in schedule II:

Drug	Schedule
Phencyclidine (7471)	II

Drug	Schedule
1-Piperidinocyclohexane-carbonitrile (8603)	II
Benzoylecgonine (9180)	II

The company plans to manufacture small quantities of the listed controlled substances for use in diagnostic products.

Any other such applicant, and any person who is presently registered with DEA to manufacture such substances, may file comments or objections to the issuance of the proposed registration pursuant to 21 CFR 1301.33(a).

Any such written comments or objections should be addressed, in quintuplicate, to the Drug Enforcement Administration, Office of Diversion Control, Federal Register Representative (ODL), 8701 Morrissette Drive, Springfield, Virginia 22152; and must be filed no later than July 20, 2012.

Dated: May 11, 2012.

Joseph T. Rannazzisi,

Deputy Assistant Administrator, Office of Diversion Control, Drug Enforcement Administration.

[FR Doc. 2012–12268 Filed 5–18–12; 8:45 am]

BILLING CODE 4410–09–P

DEPARTMENT OF JUSTICE

Drug Enforcement Administration

Manufacturer of Controlled Substances Notice of Application, Ampac Fine Chemicals LLC.

Pursuant to § 1301.33(a), Title 21 of the Code of Federal Regulations (CFR), this is notice that on April 11, 2012, AMPAC Fine Chemicals LLC., Highway 50 and Hazel Avenue, Building 05001, Rancho Cordova, California 95670, made application by renewal to the Drug Enforcement Administration (DEA) to be registered as a bulk manufacturer of the following basic classes of controlled substances:

Drug	Schedule
Thebaine (9333)	II
Poppy Straw Concentrate (9670)	II

The company is a contract manufacturer. In reference to Poppy Straw Concentrate the company will manufacture Thebaine intermediates for sale to its customers for further manufacture. No other activity for this drug code is authorized for registration.

Any other such applicant, and any person who is presently registered with DEA to manufacture such substances, may file comments or objections to the issuance of the proposed registration pursuant to 21 CFR 1301.33(a).

Any such written comments or objections should be addressed, in quintuplicate, to the Drug Enforcement Administration, Office of Diversion Control, Federal Register Representative (ODL), 8701 Morrissette Drive, Springfield, Virginia 22152; and must be filed no later than July 20, 2012.

Dated: May 11, 2012.

Joseph T. Rannazzisi,

Deputy Assistant Administrator, Office of Diversion Control, Drug Enforcement Administration.

[FR Doc. 2012–12277 Filed 5–18–12; 8:45 am]

BILLING CODE 4410–09–P

DEPARTMENT OF JUSTICE

Drug Enforcement Administration

Manufacturer of Controlled Substances; Notice of Application; Noramco Inc. (GA)

Pursuant to § 1301.33(a), Title 21 of the Code of Federal Regulations (CFR), this is notice that on March 21, 2012, Noramco Inc., 1440 Olympic Drive, Athens, Georgia 30601, made application by letter to the Drug Enforcement Administration (DEA) to be registered as a bulk manufacturer of Gamma Hydroxybutyric Acid (2010), a basic class of controlled substance listed in schedule I.

The company plans to manufacture the listed controlled substance in bulk for distribution to its customers.

Any other such applicant, and any person who is presently registered with DEA to manufacture such substance, may file comments or objections to the issuance of the proposed registration pursuant to 21 CFR 1301.33(a).

Any such written comments or objections should be addressed, in quintuplicate, to the Drug Enforcement Administration, Office of Diversion Control, Federal Register Representative (ODL), 8701 Morrissette Drive, Springfield, Virginia 22152; and must be filed no later than July 20, 2012.

Dated: May 9, 2012.

Joseph T. Rannazzisi,

Deputy Assistant Administrator, Office of Diversion Control, Drug Enforcement Administration.

[FR Doc. 2012–12282 Filed 5–18–12; 8:45 am]

BILLING CODE 4410–09–P

DEPARTMENT OF JUSTICE

Drug Enforcement Administration

Manufacturer of Controlled Substances; Notice Of Application; Stepan Company

Pursuant to § 1301.33(a), Title 21 of the Code of Federal Regulations (CFR), this is notice that on February 28, 2012, Stepan Company, Natural Products Dept., 100 W. Hunter Avenue, Maywood, New Jersey 07607, made application by renewal to the Drug Enforcement Administration (DEA) to be registered as a bulk manufacturer of the following basic classes of controlled substances:

Drug	Schedule
Cocaine (9041)	II
Ecgonine (9180)	II

The company plans to manufacture the listed controlled substances in bulk for distribution to its customers.

Any other such applicant, and any person who is presently registered with DEA to manufacture such substances, may file comments or objections to the issuance of the proposed registration pursuant to 21 CFR 1301.33(a).

Any such written comments or objections should be addressed, in quintuplicate, to the Drug Enforcement Administration, Office of Diversion Control, Federal Register Representative (ODL), 8701 Morrissette Drive, Springfield, Virginia 22152; and must be filed no later than July 20, 2012.

Dated: May 11, 2012.

Joseph T. Rannazzisi,

Deputy Assistant Administrator, Office of Diversion Control, Drug Enforcement Administration.

[FR Doc. 2012–12286 Filed 5–18–12; 8:45 am]

BILLING CODE 4410–09–P

DEPARTMENT OF JUSTICE

Drug Enforcement Administration

Manufacturer of Controlled Substances; Notice of Application; Johnson Matthey, Inc.

Pursuant to § 1301.33(a), Title 21 of the Code of Federal Regulations (CFR), this is notice that on March 26, 2012, Johnson Matthey, Inc., Custom Pharmaceuticals Department, 2003 Nolte Drive, West Deptford, New Jersey 08066–1742, made application by letter to the Drug Enforcement Administration (DEA) to be registered as a bulk

manufacturer of Tapentadol (9780), a basic class of controlled substance listed in schedule II.

The company plans to manufacture the listed controlled substance for sale to its customers.

Any other such applicant, and any person who is presently registered with DEA to manufacture such substance, may file comments or objections to the issuance of the proposed registration pursuant to 21 CFR 1301.33(a).

Any such written comments or objections should be addressed, in quintuplicate, to the Drug Enforcement Administration, Office of Diversion Control, Federal Register Representative (ODL), 8701 Morrissette Drive, Springfield, Virginia 22152; and must be filed no later than July 20, 2012.

Dated: May 9, 2012.

Joseph T. Rannazzisi,

Deputy Assistant Administrator, Office of Diversion Control, Drug Enforcement Administration.

[FR Doc. 2012–12284 Filed 5–18–12; 8:45 am]

BILLING CODE 4410–09–P

DEPARTMENT OF JUSTICE

Drug Enforcement Administration

Manufacturer of Controlled Substances; Notice of Application; Austin Pharma, LLC.

Pursuant to § 1301.33(a), Title 21 of the Code of Federal Regulations (CFR), this is notice that on April 11, 2012, Austin Pharma, LLC., 811 Paloma Drive, Suite C, Round Rock, Texas 78665–2402, made application by renewal to the Drug Enforcement Administration (DEA) to be registered as a bulk manufacturer of the following basic classes of controlled substances:

Drug	Schedule
Marihuana (7360)	I
Tetrahydrocannabinols (7370)	I

The company plans to manufacture bulk active pharmaceutical ingredients (APIs) for distribution to its customers.

In reference to drug code 7360 (Marihuana), the company plans to bulk manufacture cannabidiol as a synthetic intermediate. This controlled substance will be further synthesized to bulk manufacture a synthetic THC (7370). No other activity for this drug code is authorized for this registration.

Any other such applicant, and any person who is presently registered with DEA to manufacture such substance, may file comments or objections to the issuance of the proposed registration pursuant to 21 CFR 1301.33(a).

Any such written comments or objections should be addressed, in quintuplicate, to the Drug Enforcement Administration, Office of Diversion Control, Federal Register Representative (ODL), 8701 Morrissette Drive, Springfield, Virginia 22152; and must be filed no later than July 20, 2012.

Dated: May 9, 2012.

Joseph T. Rannazzisi,

Deputy Assistant Administrator, Office of Diversion Control, Drug Enforcement Administration.

[FR Doc. 2012–12280 Filed 5–18–12; 8:45 am]

BILLING CODE 4410–09–P

DEPARTMENT OF JUSTICE

Drug Enforcement Administration

Manufacturer of Controlled Substances; Notice of Application; American Radiolabeled Chemicals, Inc.

Pursuant to § 1301.33(a), Title 21 of the Code of Federal Regulations (CFR), this is notice that on March 15, 2012, American Radiolabeled Chemicals, Inc., 101 Arc Drive, St. Louis, Missouri 63146, made application by renewal to the Drug Enforcement Administration (DEA) to be registered as a bulk manufacturer of the following basic classes of controlled substances:

Drug	Schedule
Gamma Hydroxybutyric Acid (2010).	I
Ibogaine (7260)	I
Lysergic acid diethylamide (7315)	I
Tetrahydrocannabinols (7370)	I
Dimethyltryptamine (7435)	I
1-[1-(2-Thienyl)cyclohexyl]piperidine (7470).	I
Dihydromorphine (9145)	I
Normorphine (9313)	I
Heroin (9200)	I
Amphetamine (1100)	II
Methamphetamine (1105)	II
Amobarbital (2125)	II
Phencyclidine (7471)	II
Phenylacetone (8501)	II
Cocaine (9041)	II
Codeine (9050)	II
Dihydrocodeine (9120)	II
Oxycodone (9143)	II
Hydromorphone (9150)	II
Ecgonine (9180)	II
Hydrocodone (9193)	II
Meperidine (9230)	II
Metazocine (9240)	II
Dextropropoxyphene, bulk (non-dosage forms) (9273).	II
Morphine (9300)	II
Oripavine (9330)	II
Thebaine (9333)	II
Oxymorphone (9652)	II
Phenazocine (9715)	II
Carfentanil (9743)	II
Fentanyl (9801)	II

The company plans to manufacture small quantities of the listed controlled substances as radiolabeled compounds for biochemical research.

Any other such applicant, and any person who is presently registered with DEA to manufacture such substances, may file comments or objections to the issuance of the proposed registration pursuant to 21 CFR 1301.33(a).

Any such written comments or objections should be addressed, in quintuplicate, to the Drug Enforcement Administration, Office of Diversion Control, Federal Register Representative (ODL), 8701 Morrissette Drive, Springfield, Virginia 22152; and must be filed no later than July 20, 2012.

Dated: May 9, 2012.

Joseph T. Rannazzisi,

Deputy Assistant Administrator, Office of Diversion Control, Drug Enforcement Administration.

[FR Doc. 2012–12251 Filed 5–18–12; 8:45 am]

BILLING CODE 4410–09–P

DEPARTMENT OF JUSTICE

Drug Enforcement Administration

Manufacturer of Controlled Substances; Notice of Registration; Siegfried (USA)

By Notice dated January 6, 2012, and published in the **Federal Register** on January 17, 2012, 77 FR 2323, Siegfried (USA), 33 Industrial Park Road, Pennsville, New Jersey 08070, made application by renewal to the Drug Enforcement Administration (DEA) to be registered as a bulk manufacturer of the following basic classes of controlled substances:

Drug	Schedule
Gamma Hydroxybutyric Acid (2010).	I
Dihydromorphine (9145)	I
Hydromorphinol (9301)	I
Methylphenidate (1724)	II
Amobarbital (2125)	II
Pentobarbital (2270)	II
Secobarbital (2315)	II
Codeine (9050)	II
Oxycodone (9143)	II
Hydromorphone (9150)	II
Hydrocodone (9193)	II
Methadone (9250)	II
Methadone intermediate (9254)	II
Dextropropoxyphene, bulk (non-dosage forms) (9273).	II
Morphine (9300)	II
Oripavine (9330)	II
Oxymorphone (9652)	II

The company plans to manufacture the listed controlled substances in bulk for distribution to its customers.

No comments or objections have been received. DEA has considered the factors in 21 U.S.C. 823(a) and determined that the registration of Siegfried (USA), to manufacture the listed basic classes of controlled substances is consistent with the public interest at this time. DEA has investigated Siegfried (USA), to ensure that the company's registration is consistent with the public interest. The investigation has included inspection and testing of the company's physical security systems, verification of the company's compliance with state and local laws, and a review of the company's background and history. Therefore, pursuant to 21 U.S.C. 823(a), and in accordance with 21 CFR § 1301.33, the above named company is granted registration as a bulk manufacturer of the basic classes of controlled substances listed.

Dated: May 11, 2012.

Joseph T. Rannazzisi,

Deputy Assistant Administrator, Office of Diversion Control, Drug Enforcement Administration.

[FR Doc. 2012–12274 Filed 5–18–12; 8:45 am]

BILLING CODE 4410–09–P

DEPARTMENT OF JUSTICE

Drug Enforcement Administration

Manufacturer of Controlled Substances; Notice of Registration; Cambrex Charles City, Inc.

By Notice dated September 27, 2011, and published in the **Federal Register** on October 7, 2011, 76 FR 62449, Cambrex Charles City, Inc., 1205 11th Street, Charles City, Iowa 50616, made application by letter to the Drug Enforcement Administration (DEA) to be registered as a bulk manufacturer of the following basic classes of controlled substances:

Drug	Schedule
Noroxymorphone (9668)	II
Alfentanil (9737)	II
Remifentanil (9739)	II

The company plans to manufacture the listed controlled substance Noroxymorphone (9668), in bulk for sale to its customers. It plans to manufacture the other two listed controlled substances in bulk for dosage form development, clinical trials, and use in stability qualification studies.

No comments or objections have been received. DEA has considered the factors in 21 U.S.C. 823(a), and determined that the registration of Cambrex Charles City, Inc. to manufacture the listed basic classes of controlled substances is consistent with the public interest at this time. DEA has investigated Cambrex Charles City, Inc. to ensure that the company's registration is consistent with the public interest. The investigation has included inspection and testing of the company's physical security systems, verification of the company's compliance with state and local laws, and a review of the company's background and history. Therefore, pursuant to 21 U.S.C. 823(a), and in accordance with 21 CFR 1301.33, the above named company is granted registration as a bulk manufacturer of the basic classes of controlled substances listed.

Dated: May 11, 2012.

Joseph T. Rannazzisi,

Deputy Assistant Administrator, Office of Diversion Control, Drug Enforcement Administration.

[FR Doc. 2012–12275 Filed 5–18–12; 8:45 am]

BILLING CODE 4410–09–P

DEPARTMENT OF JUSTICE

Drug Enforcement Administration

Manufacturer of Controlled Substances; Notice of Registration; Cedarburg Pharmaceuticals, Inc.

By Notice dated January 6, 2012, and published in the **Federal Register** on January 17, 2012, 77 FR 2324, Cedarburg Pharmaceuticals, Inc., 870 Badger Circle, Grafton, Wisconsin 53024, made application by renewal to the Drug Enforcement Administration (DEA) to be registered as a bulk manufacturer of the following basic classes of controlled substances:

Drug	Schedule
4-Anilino-N-phenethyl-4-piperidine (8333).	II
Fentanyl (9801)	II

The company plans to manufacture the listed controlled substances in bulk for distribution to its customers. Regarding the drug code (8333), the company plans to use this controlled substance to manufacture another controlled substance.

No comments or objections have been received. DEA has considered the factors in 21 U.S.C. 823(a) and determined that the registration of Cedarburg Pharmaceuticals, Inc. to manufacture the listed basic classes of controlled substances is consistent with the public interest at this time. DEA has investigated Cedarburg Pharmaceuticals, Inc. to ensure that the company's registration is consistent with the public interest. The investigation has included inspection and testing of the company's physical security systems, verification of the company's compliance with state and local laws, and a review of the company's background and history. Therefore, pursuant to 21 U.S.C. 823(a), and in accordance with 21 CFR 1301.33, the above named company is granted registration as a bulk manufacturer of the basic classes of controlled substances listed.

Dated: May 11, 2012.

Joseph T. Rannazzisi,

Deputy Assistant Administrator, Office of Diversion Control, Drug Enforcement Administration.

[FR Doc. 2012–12271 Filed 5–18–12; 8:45 am]

BILLING CODE 4410–09–P

DEPARTMENT OF JUSTICE

Drug Enforcement Administration

Manufacturer of Controlled Substances; Notice of Registration; Johnson Matthey, Inc., Pharmaceuticals Materials

By Notice dated January 6, 2012, and published in the **Federal Register** on January 17, 2012, 77 FR 2324, Johnson Matthey, Inc., Pharmaceuticals Materials, 900 River Road, Conshohocken, Pennsylvania 19428, made application by renewal to the Drug Enforcement Administration (DEA) to be registered as a bulk manufacturer of the following basic classes of controlled substances:

Drug	Schedule
Gamma Hydroxybutyric Acid (2010).	I
Amphetamine (1100)	II
Methylphenidate (1724)	II
Codeine (9050)	II
Oxycodone (9143)	II
Hydrocodone (9193)	II
Morphine (9300)	II
Thebaine (9333)	II

The company plans to manufacture the listed controlled substances in bulk for sale to its customers. The Thebaine (9333) will also be used to manufacture other controlled substances in bulk which will also be for sale in bulk to its customers.

No comments or objections have been received. DEA has considered the factors in 21 U.S.C. 823(a) and determined that the registration of Johnson Matthey Inc., Pharmaceuticals Materials to manufacture the listed basic

classes of controlled substances is consistent with the public interest at this time. DEA has investigated Johnson Matthey Inc., Pharmaceuticals Materials to ensure that the company's registration is consistent with the public interest. The investigation has included inspection and testing of the company's physical security systems, verification of the company's compliance with state and local laws, and a review of the company's background and history.

Therefore, pursuant to 21 U.S.C. 823(a), and in accordance with 21 CFR 1301.33, the above named company is granted registration as a bulk manufacturer of the basic classes of controlled substances listed.

Dated: May 11, 2012.

Joseph T. Rannazzisi,

Deputy Assistant Administrator, Office of Diversion Control, Drug Enforcement Administration.

[FR Doc. 2012–12244 Filed 5–18–12; 8:45 am]

BILLING CODE 4410–09–P

NATIONAL SCIENCE FOUNDATION

Advisory Committee for International Science and Engineering; Notice of Meeting

In accordance with the Federal Advisory Committee Act (Pub. L. 92–463, as amended), the National Science Foundation announces the following meeting:

Name: Advisory Committee for International Science and Engineering (25104).

Date and Time: June 11, 2012, 10:00 a.m.–12:00 p.m.

Place: Videoconference. The public is welcome to attend at National Science Foundation, 4201 Wilson Blvd., Room II–1155, Arlington, VA. Videoconference participation is only available for Committee Members.

Type of Meeting: Open.

Contact Person for More Information: Robert Webber, Office of International Science and Engineering, National Science Foundation, 4201 Wilson Blvd., Arlington, VA, Telephone: 703–292–7569. If you wish to attend the meeting and need access to the NSF building, please contact the individual listed above so your name may be added to the building access list.

Purpose of Meeting: To provide advice and recommendations concerning support for research, education and related activities involving the U.S. science and engineering community working in a global context as well as strategic efforts to promote a more effective NSF role in international science and engineering.

Agenda: Discuss strategies to identify where STEM research and education will be in 2020.

Dated: May 16, 2012.

Susanne Bolton,

Committee Management Officer.

[FR Doc. 2012–12189 Filed 5–18–12; 8:45 am]

BILLING CODE 7555–01–P

NUCLEAR REGULATORY COMMISSION

[Docket No. 50–293–LR; ASLBP No. 12–920–07–LR–BD01]

Entergy Nuclear Operations, Inc.; Establishment of Atomic Safety and Licensing Board

Pursuant to delegation by the Commission dated December 29, 1972, published in the **Federal Register**, 37 FR 28,710 (1972), and the Commission's regulations, *see, e.g.,* 10 CFR 2.104, 2.300, 2.309, 2.313, 2.318, and 2.321, notice is hereby given that an Atomic Safety and Licensing Board (Board) is being established to preside over the following proceeding:

Entergy Nuclear Operations, Inc. (Pilgrim Nuclear Power Station)

A Licensing Board is being established to consider a petition filed on May 2, 2012 by Jones River Watershed Association and by Pilgrim Watch seeking leave to reopen the record and request a hearing. The petition pertains to the January 25, 2006 application from Entergy Nuclear Operations, Inc. to renew for an additional twenty years the current operating license for Pilgrim Nuclear Power Station, which expires on June 8, 2012.

The Board is comprised of the following administrative judges:

Ann Marshall Young, Chair, Atomic Safety and Licensing Board Panel, U.S. Nuclear Regulatory Commission, Washington, DC 20555–0001.

Paul B. Abramson, Atomic Safety and Licensing Board Panel, U.S. Nuclear Regulatory Commission, Washington, DC 20555–0001.

Richard F. Cole, Atomic Safety and Licensing Board Panel, U.S. Nuclear Regulatory Commission, Washington, DC 20555–0001.

All correspondence, documents, and other materials shall be filed in accordance with the NRC E-filing rule, which the NRC promulgated in August 2007 (72 FR 49,139).

Issued at Rockville, Maryland, this 15th day of May 2012.

E. Roy Hawkens,

Chief Administrative Judge, Atomic Safety and Licensing Board Panel.

[FR Doc. 2012–12213 Filed 5–18–12; 8:45 am]

BILLING CODE 7590–01–P

NUCLEAR REGULATORY COMMISSION

Advisory Committee on Reactor Safeguards; Notice of Meeting

In accordance with the purposes of Sections 29 and 182b of the Atomic Energy Act (42 U.S.C. 2039, 2232b), the Advisory Committee on Reactor Safeguards (ACRS) will hold a meeting on June 6–8, 2012, 11545 Rockville Pike, Rockville, Maryland.

Wednesday, June 6, 2012, Conference Room T2–B1, 11545 Rockville Pike, Rockville, Maryland

8:30 a.m.–8:35 a.m.: Opening Remarks by the ACRS Chairman (Open)—The ACRS Chairman will make opening remarks regarding the conduct of the meeting.

8:35 a.m.–10:00 a.m.: Proposed Revision of 10 CFR Part 20 for Conformance with International Commission on Radiological Protection (ICRP) Recommendations (Open)—The Committee will hear presentations by and hold discussions with representatives of the NRC staff regarding the proposed modifications to 10 CFR part 20 in order to conform to current ICRP recommendations.

10:15 a.m.–11:45 a.m.: Disposition of Near-Term Task Force (NTTF) Tier 3 Recommendations (Open)—The Committee will hear presentations by and hold discussions with representatives of the NRC staff regarding the staff's plans for implementation of the NTTF Tier 3 recommendations stemming from the NRC's evaluation of the Fukushima Dai-ichi accident.

12:45 p.m.–2:15 p.m.: Proposed Revision 1 to Regulatory Guide (RG) 1.192, ''Operation and Maintainability Code Case Acceptability, ASME OM Code'' (Open)—The Committee will hear presentations by and hold discussions with representatives of the NRC staff regarding the proposed revision to RG 1.192, ''Operation and Maintainability Code Case Acceptability, ASME OM Code.''

2:30 p.m.–4:30 p.m.: Grand Gulf Nuclear Station Unit 1 Extended Power Uprate Application (Open/Closed)—The Committee will hear presentations by and hold discussions with representatives of the NRC staff and Entergy Operations Inc. regarding the Grand Gulf Nuclear Station Unit 1 extended power uprate application. [**Note:** A portion of this session may be closed in order to discuss and protect information designated as proprietary, pursuant to 5 U.S.C. 552b(c)(4)].

4:45 p.m.–5:15 p.m.: Assessment of the Quality of Selected NRC Research Projects (Open) The ACRS panels performing the quality assessment of selected NRC research projects will hold discussions.

5:15 p.m.–7:00 p.m.: Preparation of ACRS Reports (Open)—The Committee will discuss proposed ACRS reports on matters discussed during this meeting. [**Note:** A portion of this session may be closed in order to discuss and protect information designated as proprietary, pursuant to 5 U.S.C. 552b(c)(4)].

Thursday, June 7, 2012, Conference Room T2–B1, 11545 Rockville Pike, Rockville, Maryland

8:30 a.m.–8:35 a.m.: Opening Remarks by the ACRS Chairman (Open)—The ACRS Chairman will make opening remarks regarding the conduct of the meeting.

8:35 a.m.–9:15 a.m.: Discussion of Topics for Meeting with the Commission (Open)—The Committee will discuss topics for meeting with the Commission.

9:30 a.m.–11:30 a.m.: Meeting with the Commission (Open)—The Committee will discuss topics of mutual interest with the NRC Commission.

12:45 p.m.–2:15 p.m.: Significant Reactor Operating Experiences (Open)—The Committee will hear presentations by and hold discussions with representatives of the NRC staff regarding significant operational events such as the H.B. Robinson fire, the Brunswick reactor pressure vessel head tensioning, and the Fort Calhoun flooding.

2:30 p.m.–4:00 p.m.: Future ACRS Activities/Report of the Planning and Procedures Subcommittee (Open/Closed)—The Committee will discuss the recommendations of the Planning and Procedures Subcommittee regarding items proposed for consideration by the Full

Committee during future ACRS Meetings, and matters related to the conduct of ACRS business, including anticipated workload and member assignments. [**Note:** A portion of this meeting may be closed pursuant to 5 U.S.C. 552b(c)(2) and (6) to discuss organizational and personnel matters that relate solely to internal personnel rules and practices of ACRS, and information the release of which would constitute a clearly unwarranted invasion of personal privacy.]

4:00 p.m.–4:15 p.m.: Reconciliation of ACRS Comments and Recommendations (Open)—The Committee will discuss the responses from the NRC Executive Director for Operations to comments and recommendations included in recent ACRS reports and letters.

4:30 p.m.–7:00 p.m.: Preparation of ACRS Reports (Open)—The Committee will discuss proposed ACRS reports on matters discussed during this meeting. [**Note:** A portion of this session may be closed in order to discuss and protect information designated as proprietary, pursuant to 5 U.S.C. 552b(c)(4)].

Friday, June 8, 2012 Conference Room T2–B1, Two White Flint North, Rockville, Maryland

8:30 a.m.–4:30 p.m.: Preparation of ACRS Reports (Open)—The Committee will continue its discussion of proposed ACRS reports. [**Note:** A portion of this session may be closed in order to discuss and protect information designated as proprietary, pursuant to 5 U.S.C. 552b(c)(4)].

4:30 p.m.–5:00 p.m.: Miscellaneous (Open)—The Committee will discuss matters related to the conduct of Committee activities and specific issues that were not completed during previous meetings.

Procedures for the conduct of and participation in ACRS meetings were published in the **Federal Register** on October 17, 2011, (76 FR 64126–64127). In accordance with those procedures, oral or written views may be presented by members of the public, including representatives of the nuclear industry. Persons desiring to make oral statements should notify Antonio Dias, Cognizant ACRS Staff (Telephone: 301–415–6805, Email: *Antonio.Dias@nrc.gov*), five days before the meeting, if possible, so that appropriate arrangements can be made to allow necessary time during the meeting for such statements. In view of the possibility that the schedule for ACRS meetings may be adjusted by the Chairman as necessary to facilitate the conduct of the meeting, persons planning to attend should check with the Cognizant ACRS staff if such rescheduling would result in major inconvenience.

Thirty-five hard copies of each presentation or handout should be provided 30 minutes before the meeting. In addition, one electronic copy of each presentation should be emailed to the Cognizant ACRS Staff one day before meeting. If an electronic copy cannot be provided within this timeframe, presenters should provide the Cognizant ACRS Staff with a CD containing each presentation at least 30 minutes before the meeting.

In accordance with Subsection 10(d) Public Law 92–463, and 5 U.S.C. 552b(c), certain portions of this meeting may be closed, as specifically noted above. Use of still, motion picture, and television cameras during the meeting may be limited to selected portions of the meeting as determined by the Chairman. Electronic recordings will be permitted only during the open portions of the meeting.

ACRS meeting agenda, meeting transcripts, and letter reports are available through the NRC Public Document Room at *pdr.resource@nrc.gov,* or by calling the PDR at 1–800–397–4209, or from the Publicly Available Records System (PARS) component of NRC's document system (ADAMS) which is accessible from the NRC Web site at *http://www.nrc.gov/reading-rm/adams.html* or *http://www.nrc.gov/reading-rm/doc-collections/ACRS/.*

Video teleconferencing service is available for observing open sessions of ACRS meetings. Those wishing to use this service should contact Mr. Theron Brown, ACRS Audio Visual Technician (301–415–8066), between 7:30 a.m. and 3:45 p.m. (ET), at least 10 days before the meeting to ensure the availability of this service. Individuals or organizations requesting this service will be responsible for telephone line charges and for providing the equipment and facilities that they use to establish the video teleconferencing link. The availability of video teleconferencing services is not guaranteed.

Dated May 15, 2012.

Andrew L. Bates,

Advisory Committee Management Officer.

[FR Doc. 2012–12214 Filed 5–18–12; 8:45 am]

BILLING CODE 7590–01–P

NUCLEAR REGULATORY COMMISSION

[NRC–2011–0212]

Monitoring the Effectiveness of Maintenance at Nuclear Power Plants

AGENCY: Nuclear Regulatory Commission.

ACTION: Regulatory guide; issuance.

SUMMARY: The U.S. Nuclear Regulatory Commission (NRC or Commission) is issuing a revision to Regulatory Guide (RG) 1.160, ''Monitoring the Effectiveness of Maintenance at Nuclear Power Plants.'' This guide endorses Revision 4A to Nuclear Management and Resources Council (NUMARC) 93–01, ''Industry Guideline for Monitoring the Effectiveness of Maintenance at Nuclear Power Plants,'' which provides methods that are acceptable to the NRC staff for complying with the provisions of Title 10 of the *Code of Federal*

Regulations (10 CFR) 50.65, ''Requirements for Monitoring the Effectiveness of Maintenance at Nuclear Power Plants,'' Part 50, ''Domestic Licensing of Production and Utilization Facilities.'' Revision 4 of NUMARC 93–01 provides enhanced clarity regarding scoping non-safety related Systems, Structures and Components based on their use in Emergency Operating Procedures, gives guidance on consideration of fire risk in (a)(4) risk assessments, and provides enhanced consistency in unavailability monitoring between the Maintenance Rule and Reactor Oversight process by providing clarification to the definition for monitoring of short term unavailability resulting from periodic system or equipment realignments.

ADDRESSES: Please refer to Docket ID NRC–2011–0212 when contacting the NRC about the availability of information regarding this document. You may access information related to this document, which the NRC possesses and are publicly available, using the following methods:

- *Federal Rulemaking Web site:* Go to *http://www.regulations.gov* and search for Docket ID NRC–2011–0212. Address questions about NRC dockets to Carol Gallagher; telephone: 301–492–3668; email: *Carol.Gallagher@nrc.gov.*
- *NRC's Agencywide Documents Access and Management System (ADAMS):* You may access publicly-available documents online in the NRC Library at *http://www.nrc.gov/reading-rm/adams.html.* To begin the search, select ''ADAMS Public Documents'' and then select ''*Begin Web-based ADAMS Search.''* For problems with ADAMS, please contact the NRC's Public Document Room (PDR) reference staff at 1–800–397–4209, 301–415–4737, or by email to *pdr.resource@nrc.gov.* The ADAMS accession number for each document referenced in this notice (if that document is available in ADAMS) is provided the first time that a document is referenced. The draft regulatory guide is available electronically under ADAMS Accession Number ML111640267 and the regulatory analysis under ADAMS Accession Number ML111640279. NUMARC 93–01 is available under ADAMS Accession Number ML11116A198.
- *NRC's PDR:* You may examine and purchase copies of public documents at the NRC's PDR, Room O1–F21, One White Flint North, 11555 Rockville Pike, Rockville, Maryland 20852.

Regulatory guides are not copyrighted, and NRC approval is not required to reproduce them.

FOR FURTHER INFORMATION CONTACT: Robert G. Carpenter, Office of Nuclear Regulatory Research, U.S. Nuclear Regulatory Commission, Washington, DC 20555–0001, telephone: 301–251–7483 or email *Robert.Carpenter@nrc.gov.*

SUPPLEMENTARY INFORMATION: The NRC is issuing a revision to an existing guide in the NRC's ''Regulatory Guide'' series. This series was developed to describe and make available to the public information such as methods that are acceptable to the NRC staff for implementing specific parts of the agency's regulations, techniques that the staff uses in evaluating specific problems or postulated accidents, and data that the staff needs in its review of applications for permits and licenses.

Revision 3 of RG 1.160 was issued with a temporary identification as Draft Regulatory Guide, DG–1278. This regulatory guide endorses NUMARC 93–01 which provides methods that are acceptable to the NRC staff for complying with the provisions of Section 50.65, ''Requirements for Monitoring the Effectiveness of Maintenance at Nuclear Power Plants,'' of 10 CFR Part 50.

DG–1278, was published in the **Federal Register** on September 6, 2011 (76 FR 55137) for a 60 day public comment period. The public comment period was extended from October 31, 2011 to November 11, 2011 (76 FR 65753). Public comments on DG–1278 and the staff responses to the public comments are available under ADAMS Accession Number ML11321A272.

Dated at Rockville, Maryland, this 4th day of May, 2011.

For the Nuclear Regulatory Commission.

Thomas H. Boyce,

Chief, Regulatory Guide Development Branch, Division of Engineering, Office of Nuclear Regulatory Research.

[FR Doc. 2012–12215 Filed 5–18–12; 8:45 am]

BILLING CODE 7590–01–P

OVERSEAS PRIVATE INVESTMENT CORPORATION

Sunshine Notice—June 6, 2012 Public Hearing

TIME AND DATE: 2:00 p.m., Wednesday, June 6, 2012.

PLACE: Offices of the Corporation, Twelfth Floor Board Room, 1100 New York Avenue NW., Washington, DC.

STATUS: Hearing OPEN to the Public at 2:00 p.m.

PURPOSE: Public Hearing in conjunction with each meeting of OPIC's Board of Directors, to afford an opportunity for any person to present views regarding the activities of the Corporation.

PROCEDURES: Individuals wishing to address the hearing orally must provide advance notice to OPIC's Corporate Secretary no later than 5 p.m. Friday, June 1, 2012. The notice must include the individual's name, title, organization, address, and telephone number, and a concise summary of the subject matter to be presented.

Oral presentations may not exceed ten (10) minutes. The time for individual presentations may be reduced proportionately, if necessary, to afford all participants who have submitted a timely request an opportunity to be heard.

Participants wishing to submit a written statement for the record must submit a copy of such statement to OPIC's Corporate Secretary no later than 5 p.m. Friday, June 1, 2012. Such statement must be typewritten, double-spaced, and may not exceed twenty-five (25) pages.

Upon receipt of the required notice, OPIC will prepare an agenda, which will be available at the hearing, that identifies speakers, the subject on which each participant will speak, and the time allotted for each presentation.

A written summary of the hearing will be compiled, and such summary will be made available, upon written request to OPIC's Corporate Secretary, at the cost of reproduction.

Written summaries of the projects to be presented at the June 14, 2012 Board meeting will be posted on OPIC's Web site on or about Friday, May 25, 2012.

CONTACT PERSON FOR INFORMATION: Information on the hearing may be obtained from Connie M. Downs at (202) 336–8438, via facsimile at (202) 408–0297, or via email at *Connie.Downs@opic.gov.*

Dated: May 17, 2012.

Connie M. Downs,

OPIC Corporate Secretary.

[FR Doc. 2012–12308 Filed 5–17–12; 11:15 am]

BILLING CODE 3210–01–P

SECURITIES AND EXCHANGE COMMISSION

Submission for OMB Review; Comment Requested

Upon written request, copies available from: Securities and Exchange Commission, Office of Investor Education and Advocacy, Washington, DC 20549–0213.

Extension:

Rule 15g–6; OMB Control No. 3235–0395; SEC File No. 270–349.

Notice is hereby given that pursuant to the Paperwork Reduction Act of 1995 (44 U.S.C. 3501 *et seq.*), the Securities and Exchange Commission (Commission) has submitted to the Office of Management and Budget a request for approval of extension of the previously approved collection of information provided for in the following rule: Rule 15g–6—Account statements for penny stock customers (17 CFR 240.15g–6) under the Securities Exchange Act of 1934 (15 U.S.C. 78a *et seq.*).

Rule 15g–6 requires brokers and dealers that sell penny stocks to provide their customers monthly account statements containing information with regard to the penny stocks held in customer accounts. The purpose of the rule is to increase the level of disclosure to investors concerning penny stocks generally and specific penny stock transactions.

The Commission estimates that approximately 209 broker-dealers will spend an average of 78 hours annually to comply with this rule. Thus, the total compliance burden is approximately 16,302 burden-hours per year.

The Commission may not conduct or sponsor collection of information unless it displays a currently valid control number. No person shall be subject to any penalty for failing to comply with a collection of information subject to the PRA that does not display a valid Office of Management and Budget (OMB) control number.

Background documentation for this information collection may be viewed at the following Web site, *http://www.reginfo.gov.* Comments should be directed to: (i) Desk Officer for the Securities and Exchange Commission, Office of Information and Regulatory Affairs, Office of Management and Budget, Room 10102, New Executive Office Building, Washington, DC 20503 or by sending an email to: *Shagufta_Ahmed@omb.eop.gov;* and (ii) Thomas Bayer, Director/Chief Information Officer, Securities and Exchange Commission, c/o Remi Pavlik-Simon, 6432 General Green Way, Alexandria, VA 22312 or send an email to *PRA_Mailbox@sec.gov.* Comments must be submitted within 30 days of this notice.

Dated: May 14, 2012.

Kevin M. O'Neill,

Deputy Secretary.

[FR Doc. 2012–12182 Filed 5–18–12; 8:45 am]

BILLING CODE 8011–01–P

SECURITIES AND EXCHANGE COMMISSION

Sunshine Act Meetings

Notice is hereby given, pursuant to the provisions of the Government in the Sunshine Act, Public Law 94–409, that the Securities and Exchange Commission will hold Closed Meetings on Wednesday, May 16, 2012 at 11:30 a.m., Thursday, May 17, 2012 at 10:00 a.m., and Friday, May 18, 2012 at 11:00 a.m.

The General Counsel of the Commission, or his designee, has certified that, in his opinion, one or more of the exemptions as set forth in 5 U.S.C. 552b(c)(2), (4), (6) and (8) and 17 CFR 200.402(a)(2), (4), (6) and (8), permit consideration of the scheduled matter at the Closed Meetings. Certain staff members who have an interest in the matter also may be present.

Commissioner Gallagher, as duty officer, voted to consider the items listed for the Closed Meetings in closed sessions, and determined that no earlier notice thereof was possible.

The subject matter of the Closed Meetings on May 16 and 18 will be an examination of a financial institution.

The subject matter of the Closed Meeting on May 17 will be examination of financial institutions and a personnel matter.

At times, changes in Commission priorities require alterations in the scheduling of meeting items. For further information and to ascertain what, if any, matters have been added, deleted or postponed, please contact the Office of the Secretary at (202) 551–5400.

Dated: May 16, 2012.

Kevin M. O'Neill,

Deputy Secretary.

[FR Doc. 2012–12356 Filed 5–17–12; 4:15 pm]

BILLING CODE 8011–01–P

SECURITIES AND EXCHANGE COMMISSION

[Release No. 34–66989; File No. SR–FICC–2012–03]

Self-Regulatory Organizations; Fixed Income Clearing Corporation; Order Approving Proposed Rule Change To Expand the One-Pot Cross-Margining Program With New York Portfolio Clearing, LLC to Certain ''Market Professionals''

May 15, 2012.

I. Introduction

On March 20, 2012, the Fixed Income Clearing Corporation (''FICC'') filed with the Securities and Exchange Commission (''Commission'') the proposed rule change SR–FICC–2012–03 pursuant to Section 19(b)(1) of the Securities Exchange Act of 1934 (''Act'') [1] and Rule 19b–4 [2] thereunder. The proposed rule change was published for comment in the **Federal Register** on April 4, 2012.[3] The Commission received one comment letter on the proposed rule change.[4] This order approves the proposed rule change.

II. Description

This rule change consists of modifications to certain rules of the Government Securities Division (''GSD'') of FICC in order to expand FICC's existing one-pot cross-margining program with New York Portfolio Clearing, LLC (''NYPC'') [5] (''Proprietary Cross-Margining Program'') to include eligible positions held by GSD Netting Members and NYPC Clearing Members for certain ''market professionals.'' [6]

Overview

In its present form, the Proprietary Cross-Margining Program is limited to cross-margining of proprietary accounts.

[1] 15 U.S.C. 78s(b)(1).

[2] 17 CFR 240.19b–4.

[3] Securities Exchange Act Release No. 66679 (March 29, 2012), 77 FR 20445 (April 4, 2012).

[4] Letter from Adam Cooper, Senior Managing Director and Chief Legal Officer, Citadel LLC (April 23, 2012).

[5] *See* Securities Exchange Act Release No. 34–63986 (February 28, 2011), 76 FR 12144 (March 4, 2011).

[6] The NYPC–FICC ''market professional'' cross-margining program aims to closely replicate the Options Clearing Corporation (''OCC'')—Chicago Mercantile Exchange (''CME'') cross-margining program, which was first approved in 1989 (Securities Exchange Act Release No. 34–27296 (September 26, 1989), 54 FR 41195 (October 5, 1989)) and was expanded in 1991 to include market professionals (Securities Exchange Act Release No. 34–29991 (November 26, 1991), 56 FR 61458 (December 3, 1991)). Since that time, the Commission has approved several similar ''market professional'' cross-margining programs, including most recently in 2008. They include: OCC—Intermarket Clearing Corporation (''ICC'') Securities Exchange Act Release No. 34–30041 (December 5, 1991), 56 FR 68424 (December 12, 1991); OCC–ICC–CME Securities Exchange Act Release No. 34–32534 (June 28,1993), 58 FR 36234 (July 6, 1993); OCC-Board of Trade Clearing Corporation Securities Exchange Act Release No. 34–32681 (July 27, 1993), 58 FR 41302 (August 3, 1993); OCC–Kansas City Board of Trade Clearing Corporation (''KCBOT'') Securities Exchange Act Release No. 34–32708 (August 2, 1993), 58 FR 42586 (August 10, 1993); OCC–ICC—Commodity Clearing Corporation (''CCC'') Securities Exchange Act Release No. 34–33272 (December 2, 1993), 58 FR 64997 (December 10, 1993); OCC–ICC, OCC–ICC–CME, OCC–KCBOT Securities Exchange Act Release No. 34–36819 (February 7, 1996), 61 FR 5594 (February 13, 1996); OCC–CME—Securities Exchange Act Release No. 34–38584 (May 8, 1997), 62 FR 26602 (May 14, 1997); and OCC–ICE Clear Securities Exchange Act Release No. 34–57118 (January 9, 2008), 73 FR 2970 (January 16, 2008).

Specifically, from NYPC's perspective, only a member's proprietary or ''house'' account is eligible for cross-margining; from GSD's perspective, all accounts maintained by GSD for its Netting Members are deemed proprietary.[7] The proposed rule change expands the Proprietary Cross-Margining Program to non-proprietary accounts carried by participating GSD Netting Members on behalf of ''Market Professionals'' (''Market Professional Cross-Margining Program''). The proposed rule change defines ''Market Professional'' as an entity, other than a ''non-customer,''[8] that is a member of a designated contract market and that actively trades for its own account products that are eligible under the cross-margining agreement between FICC and NYPC (''FICC–NYPC Cross-Margining Agreement'')[9] for cross-margining (''Eligible Products'').[10] Positions and collateral held for Market Professionals will be maintained in accounts that are distinct from both proprietary cross-margining accounts and non-cross-margining accounts.[11]

As with the current Proprietary Cross-Margining Program, the proposed Market Professional Cross-Margining Program would be available to GSD Netting Members that carry accounts of Market Professionals and that are also clearing members of NYPC (''Joint Member'') or that have an affiliate that is a clearing member of NYPC (''Affiliated Member''). Members do not have to be participating in the Proprietary Cross-Margining Program in order to participate in the proposed Market Professional Cross-Margining Program (or vice versa).

The proposed rule change necessitates revisions to the FICC–NYPC Cross-Margining Agreement, which are described in detail below. Additional participant agreements have been added as appendices to the FICC–NYPC Cross-Margining Agreement for this purpose.

Segregation and Liquidation Considerations

The proposed Market Professional Cross-Margining Program addresses concerns regarding segregation and liquidation procedures under the Commodity Exchange Act (''CEA''),[12] Title 11 of the United States Code (''Bankruptcy Code'')[13] and the Securities Investor Protection Act (''SIPA'').[14] The CEA requires that the property of customers must be segregated from the proprietary property of a futures commission merchant. Because Market Professionals are considered ''customers'' under CFTC regulations, the cross-margined positions of the Market Professionals and all property related thereto must be segregated from the cross-margined positions and property of the GSD Netting Member that carries their accounts.

Under the proposed rule change, each GSD Netting Member electing to participate in the Market Professional Cross-Margining Program must execute a Cross-Margining Participant Agreement for Market Professional Accounts and must establish a separate cross-margining account for the benefit of Market Professionals for whom it carries cross-margined positions (''Market Professional Cross-Margining Account''). GSD Netting Members and NYPC Clearing Members who establish Market Professional Cross-Margining Accounts must also obtain the consent of each Market Professional whose cross-margined positions are carried in such account to the commingling of the Market Professional's assets with those of other electing Market Professionals of the same GSD Netting Member and NYPC Clearing Member (or permitted margin affiliate at NYPC); provided, however, that consistent with the requirements of CFTC Regulation 39.13(g)(8)(i) (gross margin for customer accounts), the positions of a Market Professional cleared by FICC will only be cross-margined with the derivatives positions of the same Market Professional cleared by NYPC. Moreover, because Section 4d(a)(2) of the CEA prohibits commingling futures and securities in the absence of a CFTC rule, regulation or order to the contrary, it will be necessary for NYPC to obtain from the CFTC an order stating that Eligible Products that are cleared by FICC and property received by a participating GSD Netting Member to margin, guarantee, or secure trades or positions in or accruing as a result of such Eligible Products may be commingled in a Market Professional Cross-Margining Account with Eligible Products cleared by NYPC and with property received by a participating NYPC Clearing Member to margin, guarantee, or secure trades or positions in or accruing as a result of such Eligible Products that would otherwise be required by the CFTC to be segregated under the CEA.

FICC has established procedures to facilitate the segregation of the funds and securities deposited or received by GSD Netting Members regarding their Market Professional cross-margining activity. For example, each GSD Netting Member must establish separate bank accounts for the purpose of making daily funds-only settlement of its proprietary cross-margining activity and for the purpose of making daily funds-only settlement of its Market Professional cross-margining activity. In addition, FICC and NYPC will establish and use separate bank accounts for paying and collecting cash margin and funds-only settlement amounts resulting from members' proprietary cross-margining activities and for paying and collecting such amounts resulting from members' market professional cross-margining activity. FICC will not permit the netting of obligations arising out of a GSD Netting Member's proprietary cross-margining activity with those arising out of its Market Professional cross-margining activity.

FICC has also taken steps to assure the segregation of securities that are deposited with FICC or its agents to satisfy Clearing Fund requirements in Market Professional Cross-Margining Accounts and proprietary cross-margining accounts. For example, FICC and NYPC will establish and use

[7] The GSD does not have segregated accounts for Netting Members' customers. In contrast, NYPC currently maintains both proprietary and segregated customer accounts for its Clearing Members in compliance with applicable Commodity Futures Trading Commission (''CFTC'') regulations. Only NYPC Clearing Members' proprietary accounts at NYPC are eligible for participation in the Proprietary Cross-Margining Program. The present proposal would introduce a third type of account at NYPC that NYPC Clearing Members may maintain, *i.e.,* the Market Professional account. The present proposal also introduces a second type of account at GSD, *i.e.,* the Market Professional account.

[8] Consistent with previously approved market professional cross-margining programs, FICC's rules define ''Non-Customer'' as GSD Netting Members and other persons whose accounts with GSD Netting Members would not be the accounts of ''customers'' within the meaning of SEC Rules 8c–1 and 15c2–1.

[9] The FICC–NYPC Cross-Margining Agreement was approved by the Commission as part of FICC's Rule Filing No. SR–FICC–2010–09. *See* note 5, *supra.*

[10] As defined in the FICC–NYPC Cross-Margining Agreement, the term ''Eligible Products'' includes U.S. Government securities, securities of U.S. federal agencies and U.S. Government-sponsored enterprises, financing products and certain mortgage-backed securities cleared by FICC, and futures contracts and options on futures contracts, including U.S. dollar-denominated interest rate and fixed income futures contracts and options on futures contracts, cleared by NYPC. Formal inclusion of options on futures in the program will be the subject of a separate rule filing with the Commission.

[11] As described above, GSD Netting Members who wish to participate in the Market Professional Cross-Margining Program will need to open an additional account for their Market Professionals. Likewise, NYPC Clearing Members wishing to participate in the program will need to open an additional account for their Market Professionals, which will be required to be separate and distinct from both their proprietary and segregated customer accounts.

[12] 7 U.S.C. 1–27f as amended.

[13] 11 U.S.C. 101–1532 as amended.

[14] 15 U.S.C. 78aaa–78lll as amended.

separate custody accounts to hold securities deposited as margin by members for proprietary cross-margining activity and to hold securities deposited as margin by members for Market Professional cross-margining activity.

FICC's proposal also addresses the potential for conflict between SIPA, Subchapter IV of chapter 7 of the Bankruptcy Code,[15] and corresponding CFTC bankruptcy regulations,[16] in the event of the liquidation and distribution of the property and funds of a GSD Netting Member that is a registered broker-dealer.[17] To establish uniform results in the event of the bankruptcy or liquidation of a broker-dealer GSD Netting Member under SIPA, FICC will require each Netting Member that chooses to participate in the Market Professional Cross-Margining Program to require that the GSD Netting Member's participating Market Professionals agree that in the event of the bankruptcy or liquidation of the GSD Netting Member carrying its cross-margined positions, the Market Professional will subordinate its cross-margining related claims to the claims of the firm's non-cross-margining customers.[18] Similarly, each participating Market Professional must acknowledge that all of the assets carried in a GSD Netting Member's Market Professional Cross-Margining Account on the Market Professional's behalf will not be deemed ''customer property'' for purposes of SIPA or give rise to any claim thereunder. This means that in the event of a GSD Netting Member bankruptcy, all claims to assets in cross-margining accounts will be determined under Subchapter IV of chapter 7 of the Bankruptcy Code and applicable CFTC regulations. FICC believes these measures reduce the possibility that assets in a GSD Netting Member's Market Professional Cross-Margining Account will be subject to two conflicting schemes of distribution.

In the event of a default of a member that chooses to participate in the Market Professional Cross-Margining Program, FICC and NYPC will follow the remedies outlined in the FICC–NYPC Cross-Margining Agreement to liquidate or transfer the proprietary and Market Professional Cross-Margining Accounts. Any deficit in the Market Professional Cross-Margining Account would, absent a deficit in any NYPC segregated customer account of the defaulting member, be offset against any credit in any proprietary cross-margining account of the defaulting member. Non-cross-margining accounts at NYPC would be liquidated or transferred pursuant to NYPC procedures as they exist today. FICC and NYPC will not offset a credit in a Market Professional Cross-Margining Account with a deficit in a proprietary cross-margin account or with any other account FICC or NYPC maintains for the defaulting member. Thus, any surplus in the Market Professional Cross-Margining Account will be returned to the member or its representative.

In the event of a member bankruptcy, the Bankruptcy Code exempts FICC and NYPC from the automatic stay and permits FICC and NYPC to liquidate any assets held for the insolvent member[19] and offset those assets against the member's liabilities.[20] Assets of the member held in the Market Professional Cross-Margining Account will only be set-off against related Market Professional cross-margining liabilities. Any assets remaining after such a set-off will be transferred to the bankruptcy trustee for administration and distribution.[21]

If a member becomes insolvent, the Securities Investor Protection Corporation (''SIPC'') may and probably will file for a protective decree under SIPA.[22] SIPC will then appoint a trustee charged with liquidating the bankrupt estate, consistent with SIPA. Under SIPA, the trustee must, to the extent not inconsistent with SIPA, administer the assets of the member held as a commodity broker in accordance with the Bankruptcy Code's commodity broker liquidation requirements and applicable CFTC regulations.[23] Even if SIPC does not exercise its power to seek appointment of a trustee and SIPA does not apply to the liquidation, a Market Professional's claims to assets in the Market Professional Cross-Margining Account will be determined in accordance with the Bankruptcy Code's commodity broker liquidation scheme contained in Subchapter IV of chapter 7 and applicable CFTC regulations.

Generally, applicable sections of the Bankruptcy Code and CFTC regulations provide for the trustee to distribute ''customer property''[24] pro rata among ''customers''[25] according to account class and generally give priority to customer claims over all others, except those dealing with the administration of the bankrupt estate.[26] Also, assuming the trustee does not transfer customer accounts to another firm and determines to liquidate customer accounts, the trustee will distribute customer property to the claimants.[27] If there is a shortfall in the Market Professional Cross-Margining Account and there is no shortfall or a lesser shortfall in the non-cross-margining customer account, Market Professionals will have a claim against the Market Professional Cross-Margining Account and will be able to claim against the non-cross-margining customer account only after all non-cross-margining customer claims have been satisfied. If the shortfall in the non-cross-margining customer account is equal to or greater than the shortfall in the Market Professional Cross-Margining Account, the two accounts will be combined and Market Professionals and non-cross-margining customers will share on a pro rata basis.[28]

Proposed Changes to the FICC–NYPC Cross-Margining Agreement

In addition to certain technical corrections and conforming changes, the FICC–NYPC Cross-Margining Agreement would be substantively amended as described below in order to incorporate the proposed Market Professional Cross-Margining Program.

[15] 11 U.S.C. 761–767.

[16] 17 CFR Part 190.

[17] Some Market Professionals could be deemed to be ''customers'' under SIPA and Exchange Act Rule 15c3–3. Consistent with previously approved cross-margining programs, however, Market Professionals will be required to agree to subordinate their claims, in the event of the bankruptcy of a GSD Netting Member or an NYPC member, to the claims of other customers. *See* Securities Exchange Act Release No. 34–29991 (November 26, 1991), 56 FR 61458 (December 3, 1991) n.23.

[18] Under SIPA, SIPC satisfies the claims of ''customers'' against insolvent broker-dealers up to predetermined limits. 15 U.S.C. 78fff–3. Under SIPA, however, the term ''customer'' does not include any person to the extent that such person has a claim for cash or securities which, by agreement, is subordinated to the claims of any or all creditors of the debtor. 15 U.S.C. 78lll(2)(C)(ii). Because a Market Professional will be required to subordinate its cross-margin related claims against a GSD Netting Member to those of the GSD Netting Member's non-cross-margining customers, it will not fall within the protections afforded by SIPA. *See* Securities Exchange Act Release No. 34–29991 (November 26, 1991), 56 FR 61458 (December 3, 1991) n.24.

[19] 11 U.S.C. 555, 556, 560, and 561.

[20] 11 U.S.C. 362(b)(6), 362(b)(17), 362(b)(27), and 561.

[21] In the situation where an Affiliated Member becomes insolvent, assets in the Market Professional Cross-Margin Accounts of FICC and NYPC will be set-off by FICC and NYPC against related liabilities in such accounts.

[22] 11 U.S.C. 742.

[23] 15 U.S.C. 78fff–1(b) states in part: ''To the extent consistent with the provisions of this chapter or as otherwise ordered by the court, a trustee shall be subject to the same duties as a trustee in a case under chapter 7 of Title 11, including, if the debtor is a commodity broker, as defined under section 101 of such title, the duties specified in subchapter IV of such chapter 7.''

[24] As defined in 11 U.S.C. 761(10) and 17 CFR 190.01(n).

[25] As defined in 11 U.S.C. 761(9).

[26] 11 U.S.C. 766(h); *see* 17 CFR 190.08.

[27] *See generally* 11 U.S.C. 766 and 17 CFR 190.08.

[28] *See* 17 CFR part 190, appendix B (Framework 1).

Capitalized terms used in this section have the meanings given to them in the FICC–NYPC Cross-Margining Agreement.

Recitals

The Recitals to the FICC–NYPC Cross-Margining Agreement would be amended to describe the proposed expansion of the existing FICC–NYPC Cross-Margining Agreement to provide for the cross-margining of the accounts of Market Professionals, and also to reflect the fact that the current FICC–NYPC Cross-Margining Agreement was executed on March 4, 2011, after receipt of the necessary regulatory approvals by FICC and NYPC.

Section 1. Definitions

Section 1(f) (Available Assets) and Section 1(tt) (Margin)

The ''Available Assets'' definition would be amended to include as assets available in the event of a default any margin posted to the Defaulting Member's Proprietary Cross-Margining Account, as well as any margin posted to the Defaulting Member's Market Professional Cross-Margining Account. The ''Margin'' definition would be similarly amended to include original margin, option premiums and other margin collateral held by or for the account of FICC or NYPC to secure the obligations of a Cross-Margining Participant's Proprietary Cross-Margining Account and/or its Market Professional Cross-Margining Account.

The ''Available Assets'' definition would be further amended to clarify that, consistent with the distributional convention established in Appendix B to Part 190 of the CFTC's Regulations, the NYPC Guaranty Fund deposits of a Defaulting Member would first be applied to any deficit in the Customer Funds Account of the Defaulting Member carried by NYPC, and then, after any such deficit has been completely satisfied, to any Cross-Margin Loss in the Defaulting Member's Market Professional Cross-Margining Account carried by NYPC, and then finally to any Cross-Margin Loss in the Defaulting Member's Proprietary Cross-Margining Account carried by NYPC.

Section 1(t) (Cross-Margin Gain) and Section 1(u) (Cross-Margin Loss)

For ease of reference and to facilitate understanding of the loss allocation mechanism in the event of the liquidation of the cross-margined positions carried for a Defaulting Member by FICC and NYPC, the definitions of Cross-Margin Gain and Cross-Margin Loss would become a new subsection (b) of Section 7 of the FICC–NYPC Cross-Margining Agreement (Suspension and Liquidation of Cross-Margining Participant).

Section 1(y) (Customer Funds Account)

The term ''Segregated Funds Account'' in the existing FICC–NYPC Cross-Margining Agreement would be replaced by the term ''Customer Funds Account'' and modified in order to clearly distinguish non-cross-margining ''customer'' accounts established by NYPC from both Market Professional Cross-Margining Accounts and Proprietary Cross-Margining Accounts.

Section 1(ww) (Market Professional)

As described above, consistent with previously approved cross-margining programs, the term ''Market Professional'' would be defined as an entity, other than a ''Non-Customer'' (described below), that is a member of a designated contract market and that actively trades for its own account Eligible Products that are eligible for cross-margining under the FICC–NYPC Cross-Margining Agreement.

Section 1(bbb) (Non-Customer)

As described above, ''Non-Customers'' would be excluded from the definition of a Market Professional. With respect to a GSD Netting Member, the term ''Non-Customer'' would be defined as such GSD Netting Member or other person whose account with such GSD Netting Member would not be the account of a ''customer'' within the meaning of SEC Rules 8c–1 and 15c2–1.

Section 1(sss) (Securities Custody Account) and 1(uuu) (Settlement Account)

For ease of reference, the term ''Cross-Margining Securities Account'' would be replaced with the term ''Securities Custody Account'' and would be expanded to include a custody account to hold Margin in the form of securities deposited by a Cross-Margining Participant in respect of a Proprietary Cross-Margining Account or a Market Professional Cross-Margining Account.

Similarly, the definition of ''Settlement Account'' would be expanded to include a bank account established to hold cash Margin deposited by a Cross-Margining Participant in respect of a Proprietary Cross-Margining Account or a Market Professional Cross-Margining Account.

Section 2. Participation

Section 2(a) would be amended and Section 2(b) and 2(c) would be added in order to accommodate the additional documentation required to establish a Set of Market Professional Cross-Margining Accounts by either a Joint Clearing Member or by a Clearing Member and its Cross-Margining Affiliate.

Section 5. Forms of Margin; Holding Margin

Section 5(b) would be amended to reflect the fact that separate Settlement Accounts and Securities Custody Accounts would be maintained for proprietary and Market Professional cross-margining activity.

Section 5(c) would be amended to allow FICC and NYPC to hold cash and securities posted with respect to cross-margining activity in either separate accounts or, consistent with previously approved cross-margining programs, joint accounts titled in the names of FICC and NYPC.

Section 7. Suspension and Liquidation of Cross-Margining Participant

Section 7(a) would be amended to clarify that the positions and Margin of a Defaulting Member may be liquidated or transferred to one or more non-defaulting Clearing Members.

A new Section 7(b) would be added to define ''Cross-Margin Gain'' and ''Cross-Margin Loss,'' as described above. New Section 7(b) would also make clear that in calculating its Cross-Margin Gain (or Cross-Margin Loss) or Net Gain (or Net Loss) FICC and NYPC would be required to make separate calculations with respect to the Defaulting Member's Proprietary Cross-Margining Account and its Market Professional Cross-Margining Account.

Section 7(g) would be amended to provide that to the extent that pursuant to the loss allocation prescribed in Section 7, both FICC and NYPC owe payments to each other, *i.e.,* one clearing organization owes a payment with respect to the Proprietary Cross-Margining Account of a Defaulting Member and the other owes a payment with respect to the Defaulting Member's Market Professional Cross-Margining Account, those two payments may be netted and setoff against each other.

Proposed Changes to Clearing Member Agreements

The FICC–NYPC Cross-Margining Agreement is solely between FICC and NYPC. Members of FICC and of NYPC that wish to participate in the Cross-Margining Program must become party to a Clearing Member Cross-Margining Agreement which, among other things, reflects the Clearing Member's agreement to be bound by the Rules applicable to cross-margining and to the provisions of the FICC–NYPC Cross-

Margining Agreement (''Clearing Member Agreements''). Capitalized terms used in this section have the meanings given to them in the proposed Clearing Member Agreements.

The current FICC–NYPC Cross-Margining Agreement includes two forms of Clearing Member Agreement—one for joint Clearing Members (*i.e.,* entities that are members of both FICC and NYPC), the other for Clearing Members that are Affiliates of each other (*i.e.,* a Clearing Member of either FICC or NYPC that directly or indirectly controls, is controlled by, or under common control with a Clearing Member of the other Clearing Organization). Those agreements, which are set forth as Appendix A and Appendix B to the FICC–NYPC Cross-Margining Agreement, would be renamed as Clearing Member Cross-Margining Agreement (Joint Clearing Member—Proprietary Accounts) and Clearing Member Cross-Margining Agreement (Affiliated Clearing Members—Proprietary Accounts), and references in those agreements to a ''Member'' would be replaced with references to a ''Clearing Member'' for consistency with the terminology used in the FICC–NYPC Cross-Margining Agreement.

The Clearing Member Agreements for Proprietary Accounts are proposed to be further modified to make clear that a Set of Proprietary Cross-Margining Accounts would be combined and treated as a single account for purposes of calculating Margin. This change is reflective of the current practice of the Clearing Organizations pursuant to the Cross-Margining Agreement and is proposed to be set out solely for purposes of clarity.

The Clearing Member Agreements would additionally be modified to reflect the practice of the Clearing Organizations regarding the use of Clearing Data (as that term is defined in the Clearing Member Cross-Margining Agreements). Specifically, the Clearing Member Agreements would be modified to provide that Clearing Data may only be disclosed (i) To an Affiliated Clearing Member, where applicable, (ii) in accordance with the provisions of Section 10 of the Cross-Margining Agreement, and (iii) in aggregated form, provided that such aggregated Clearing Data does not identify of the Clearing Member or Affiliated Clearing Members, as applicable, as the source thereof.

The termination provisions of the Clearing Member Agreements for Proprietary Accounts would also be modified to make clear that the required acknowledgment of a Clearing Member's termination of the Agreement will be given by the Clearing Organizations promptly after the two Business Day notice period required by the Clearing Member Agreements. The termination provisions would additionally be modified to make explicit that a Clearing Member's continuing obligations under the Clearing Member Agreements and the Cross-Margining Agreement survive the termination of the Clearing Member Agreement only to the extent those obligations arose prior to such termination.

Finally, the Clearing Member Cross-Margining Agreement (Affiliated Clearing Members—Proprietary Accounts) is proposed to be amended to include a waiver of the Clearing Members' and the Clearing Organizations' right to jury trial in any dispute arising in connection with that agreement. A comparable provision already is included in the Clearing Member Cross-Margining Agreement (Joint Clearing Member—Proprietary Accounts). The remaining revisions to the Clearing Member Agreements for Proprietary Accounts are non-substantive or conforming.

While it is anticipated that some Clearing Members will elect to participate in cross-margining for their Proprietary Accounts and also act as Clearing Member for Market Professionals, a Clearing Member could elect to act in only one of those capacities. The Clearing Member Agreements in Appendices A and B to the FICC–NYPC Cross-Margining Agreement, therefore, would be complemented by a Clearing Member Cross-Margining Agreement (Joint Clearing Member—Market Professional Accounts) and Clearing Member Cross-Margining Agreement (Affiliated Clearing Members—Market Professional Accounts), respectively, and a Clearing Member that elected to maintain a Set of Proprietary Cross-Margining Accounts and a Set of Market Professional Cross-Margining Accounts would be required to enter into Clearing Member Cross-Margining Agreements for both its Proprietary Accounts and for its Market Professional Accounts.

The proposed Clearing Member Agreements for Market Professional Accounts (Appendices C and D to the FICC–NYPC Cross-Margining Agreement) are based upon the Clearing Member Agreements for Proprietary Accounts, but have been modified as appropriate. For example, the Clearing Member Agreements for Market Professional Accounts would make explicit that the Set of Market Professional Cross-Margining Accounts that would be established by the Clearing Organizations for a Clearing Member are to be limited to transactions and positions established by Market Professionals who have signed a Market Professional Agreement for Cross-Margining in the form set forth as Exhibit A to Appendices C and D, respectively.[29]

The Market Professional Agreements are derived from the form of Market Professional's Agreement for Cross-Margining that has previously been approved by the Commission.[30] The FICC–NYPC Market Professional Agreements differ from the forms of agreement that have previously been approved in that they would be modified to reference the Eligible Products that are available for cross-margining under the FICC–NYPC Cross-Margining Agreement. The FICC–NYPC Market Professional Agreements additionally would be modified to reference the definitions of the term ''Market Professional'' that would be set forth in the Rules of FICC and NYPC, and to require a Market Professional to represent and warrant that it does, in fact, qualify as such. Moreover, the FICC–NYPC Market Professional Agreements would be amended to provide that, consistent with the requirements of CFTC Regulation 39.13(g)(8)(i) (gross margin for customer accounts), the positions of a Market Professional cleared by FICC will only be cross-margined with the derivatives positions of the same Market Professional cleared by NYPC. The only other substantive change from the form of agreement previously approved by the Commission would be the elimination of a provision that would have conditioned the effectiveness of the Market Professional Agreements on the receipt of all necessary approvals by the Commission and the CFTC. FICC believes that a provision of this nature

[29] Similar to the Clearing Member Agreements for Proprietary Accounts, the Clearing Member Agreements for Market Professional Accounts would require the Clearing Member to pledge, for itself and for each Market Professional on whose behalf positions are carried in a Set of Market Professional Cross-Margining Accounts, the positions and Margin in the Set of Market Professional Cross-Margining Accounts. Consistent therewith and with the Clearing Member Agreements for Proprietary Accounts, the Clearing Member Agreements for Market Professional Accounts would include representations and warranties by the Clearing Member to the effect that it has the power to grant the foregoing security interest and that it is the sole owner of or otherwise has the right to transfer collateral to the Clearing Organizations.

[30] *See* Exhibits 5F and 5G to Release No. 34–57118 (January 9, 2008) (Options Clearing Corporation—ICE Clear U.S. market professional cross-margining); *see also* Securities Exchange Act Release No. 34–29991 (November 26, 1991), 56 FR 61458 (December 3, 1991) (Options Clearing Corporation—Chicago Mercantile Exchange market professional cross-margining).

is unnecessary, given that FICC and NYPC will not permit Clearing Members to enter into Market Professional Agreements until all necessary regulatory approvals have been obtained.

Proposed FICC Rule Changes

In addition to the proposed changes to the FICC–NYPC Cross-Margining Agreement, FICC is proposing the following GSD rule changes to effectuate the Market Professional Cross-Margining Program. Capitalized terms used in this section have the meanings given to them in the GSD Rules.

Rule 1 (Definitions)

New definitions are being added for the following terms: ''Market Professional,'' ''Market Professional Agreement for Cross-Margining,'' ''Market Professional Cross-Margining Account,'' ''Non-Customer,'' ''NYPC Market Professional Account,'' and ''NYPC Proprietary Account'' (which retains the current definition of ''NYPC Account''). ''NYPC Account,'' an existing term, is now proposed to be amended to encompass the two new terms of ''NYPC Market Professional Account'' and ''NYPC Proprietary Account.'' In addition, changes are proposed to the following definitions to reference the concepts associated with the Market Professional Cross-Margining Program: ''Account,'' ''Cross-Margining Affiliate,'' ''Cross-Margining Agreement'' and ''Margin Portfolio.'' A technical change is being proposed to the definition of ''Cross-Margining Payment.''

Rule 3 (On-Going Membership Requirements)

FICC is proposing to amend Section 11 of Rule 3, which covers additional accounts requested by Members, to provide for the opening of market professional accounts and to make clear that such accounts must meet the requirements of the Cross-Margining Agreement and the GSD Rules (as with all other accounts carried by FICC for its Members).

Rule 4 (Clearing Fund and Loss Allocation)

FICC is proposing to amend Section 1b and Section 2 of Rule 4 to provide that the market professional account will have its own Clearing Fund calculations separate from the main account of the Netting Member, and that the rules applicable to the Clearing Fund calculations and the requirements of the Required Fund Deposit also apply Clearing Fund calculations and Required Fund Deposits associated with the market professional accounts.

Rule 13 (Funds-Only Settlement)

FICC is proposing to amend Section 1 and Section 5a to provide that funds-only settlement amounts will be calculated separately for the member's market professional account and that net-net funds only credits/debits will also apply to the market professional accounts of a Member (or its permitted margin affiliate) across FICC and NYPC, as is the case currently with the proprietary accounts.

Rule 22A (Procedures for When the Corporation Ceases to Act)

FICC is proposing to amend Section 2 of Rule 22A to provide that a liquidation gain in a Netting Member's proprietary account will be used to offset any resulting liquidation loss in such Member's Market Professional Cross-Margining Account.

Rule 29 (Release of Clearing Data)

FICC is proposing to amend Rule 29 to make clear that a Member's Clearing Data will be released to a futures clearing organization (''FCO'') with which FICC has a Cross-Margining Arrangement and that such data will include data regarding the Member's market professional customers.

Rule 43 (Cross-Margining Arrangements)

FICC is proposing to amend Rule 43 to provide for the requirement for Netting Members who wish to participate in the Market Professional Cross-Margining Program to execute the appropriate participation agreements which are appended to the FICC–NYPC Cross-Margining Agreement as discussed above.

III. Comments

The Commission received one comment to the proposed rule change from Citadel, LLC.[31] The commenter supports the proposed rule change, stating that the proposed rule change would allow market professionals to more effectively manage risk by recognizing the value of offsetting positions cleared by NYPC and FICC. The commenter believes that the proposed rule change will allow market professionals to use their capital more efficiently and will reduce systemic risk by removing excess interconnectedness from the marketplace and optimizing collateral balances. Furthermore the commenter believes that the proposed rule change will further encourage competition in the US futures markets and provides for consumer protection in the event of the bankruptcy of a clearing member in accordance with the CFTC's rules.

IV. Discussion

Section 19(b)(2)(B) of the Act[32] directs the Commission to approve a proposed rule change of a self-regulatory organization if it finds that the proposed rule change is consistent with the requirements of the Act and the rules and regulations thereunder applicable to such organization. In Section 17A(a)(2)(A)(ii) of the Act,[33] Congress directs the Commission to use its authority to facilitate the establishment of linked or coordinated facilities for clearance and settlement of transactions in securities, securities options, contracts of sale for future delivery and options thereon, and commodity options. Sections 17A(b)(3)(A) and (F) of the Act[34] require that a clearing agency be organized and its rules designed to facilitate the prompt and accurate clearance and settlement of securities transactions and derivative agreements, contracts, and transactions for which it is responsible and to safeguard securities and funds in its custody or control or for which it is responsible. The Commission has carefully considered the proposed rule change and the comment thereto and the Commission finds that the proposed rule change is consistent with the requirements of the Act and the rules and regulations thereunder.[35]

As the Commission noted in approving the FICC–NYPC Proprietary Cross-Margining Program, the Commission has encouraged cross-margining arrangements as a way to promote more efficient risk management across product classes.[36] Furthermore, cross-margining arrangements are consistent with Section 17A(b)(3)(F) in that they may strengthen the safeguarding of assets through effective risk controls that more broadly take into account offsetting positions of participants in both the cash and futures markets, and promote prompt and

[31] *See supra* note 4.

[32] 15 U.S.C. 78s(b)(2)(B).

[33] 15 U.S.C. 78a–1 (a)(2)(A)(ii).

[34] 15 U.S.C. 78q–1(b)(3)(A), (F)

[35] In approving this proposed rule change, the Commission notes and FICC agrees that FICC will adhere to the conditions to provide information and reports on an ongoing basis that are set forth in the Commission's Order Granting Approval of a Proposed Rule Change to Introduce Cross-Margining of Certain Positions Cleared at the Fixed Income Clearing Corporation and Certain Positions Cleared at New York Portfolio Clearing, LLC, to the extent applicable to ''Market Professionals.'' *See* note 5, *supra.*

[36] *See* note 5, *supra.*

accurate clearance and settlement of securities through increased efficiencies. The Commission agrees with the commenter that the proposed rule change will help promote effective risk management and provides for increased efficiencies by taking into account offsetting positions. Moreover, the Commission has repeatedly found that similar cross-margining programs for ''Market Professionals'' are consistent with clearing agency requirements under Section 17A of the Act.[37] Because the Market Professional Cross-Margining Program being approved by this Order helps further linked or coordinated facilities for clearance and settlement of transactions while facilitating their prompt and accurate clearance and settlement and safeguards securities and funds in FICC's custody or control or for which it is responsible, the Commission believes that the proposed rule change is consistent with Section 17A of the Act and, therefore, is approving FICC's proposed rule change.

V. Conclusion

On the basis of the foregoing, the Commission finds that the proposal is consistent with the requirements of the Act and in particular with the requirements of Section 17A of the Act[38] and the rules and regulations thereunder.

It is therefore ordered, pursuant to Section 19(b)(2)[39] of the Act, that the proposed rule change (File No. SR–FICC–2012–03) be, and hereby is, approved.[40]

For the Commission by the Division of Trading and Markets, pursuant to delegated authority.[41]

Kevin M. O'Neill,

Deputy Secretary.

[FR Doc. 2012–12181 Filed 5–18–12; 8:45 am]

BILLING CODE 8011–01–P

[37] *See* note 6, *supra.*

[38] 15 U.S.C. 78q–1.

[39] 15 U.S.C. 78s(b)(2).

[40] In approving this proposed rule change the Commission has considered the proposed rule's impact of efficiency, competition, and capital formation. *See* 15 U.S.C. 78c(f).

[41] 17 CFR 200.30–3(a)(12).

SECURITIES AND EXCHANGE COMMISSION

[Release No. 34–66992; File No. SR–Phlx–2012–62]

Self-Regulatory Organizations; NASDAQ OMX PHLX LLC; Notice of Filing and Immediate Effectiveness of Proposed Rule Change to PSX Rule 3301(f)(8) Concerning the Processing of the Price To Comply Order

May 15, 2012.

Pursuant to Section 19(b)(1) of the Securities Exchange Act of 1934 (''Act''),[1] and Rule 19b–4 thereunder,[2] notice is hereby given that on May 4, 2012, NASDAQ OMX PHLX LLC (''Phlx'' or ''Exchange'') filed with the Securities and Exchange Commission (''SEC'' or ''Commission'') the proposed rule change as described in Items I, II, and III below, which Items have been prepared by the Exchange. The Commission is publishing this notice to solicit comments on the proposed rule change from interested persons.

I. Self-Regulatory Organization's Statement of the Terms of Substance of the Proposed Rule Change

The Exchange proposes to clarify how the processing of a Price to Comply Order under PSX Rule 3301(f)(8) operates based on the method of entry. The Exchange will implement the change effective May 14, 2012.

The text of the proposed rule change is below. Proposed new language is in italics; proposed deletions are in brackets.

* * * * *

3301. Definitions

The following definitions apply to the Rule 3200 and 3300 Series for the trading of securities on PSX.

(a)–(e)

(f) The term ''Order Type'' shall mean the unique processing prescribed for designated orders that are eligible for entry into the System, and shall include:

(1)–(6) No change.

(7) Reserved.

(8) ''Price to Comply Order'' are orders that, if, at the time of entry, a Price to Comply Order would lock or cross the quotation of an external market, the order will be priced to the current low offer (for bids) or to the current best bid (for offers) and displayed at a price one minimum price increment lower than the offer (for bids) or higher than the bid (for offers). The displayed and undisplayed prices of a Price to Comply order *entered through an OUCH port* may be adjusted once or multiple times depending upon [the method of order entry and] *the election of the member firm and* changes to the prevailing NBBO. *The displayed and undisplayed prices of a Price to Comply order entered through a RASH port may be adjusted multiple times, depending upon changes to the prevailing NBBO.*

(9)–(11) No change.

(g)–(i) No change.

* * * * *

[1] 15 U.S.C. 78s(b)(1).

[2] 17 CFR 240.19b–4.

II. Self-Regulatory Organization's Statement of the Purpose of, and Statutory Basis for, the Proposed Rule Change

In its filing with the Commission, the Exchange included statements concerning the purpose of and basis for the proposed rule change and discussed any comments it received on the proposed rule change. The text of these statements may be examined at the places specified in Item IV below. The Exchange has prepared summaries, set forth in sections A, B, and C below, of the most significant aspects of such statements.

A. Self-Regulatory Organization's Statement of the Purpose of, and the Statutory Basis for, the Proposed Rule Change

1. Purpose

Phlx is proposing to clarify the effect that the methods of order entry have on the processing of Price to Comply Orders, as described in PSX Rule 3301(f)(8).[3] Price to Comply Orders allow members to quote aggressively and still comply with the locked and crossed markets provisions of Regulation NMS.[4]

As part of the launch of its PSX equities market in October 2010, Phlx adopted many substantially similar equities rules to that of its sister exchange The NASDAQ Stock Market LLC (''NASDAQ''), including the Price to Comply Order type under PSX Rule 3301(f)(8).[5] NASDAQ amended its definition of the Price to Comply Order type under NASDAQ Rule 4751(f)(7) in June 2008.[6] Prior to June 2008, if at the time of entry on NASDAQ a Price to

[3] ''Price to Comply Order'' is an order such that, if, at the time of entry, it would lock or cross the quotation of an external market, the order will be priced to the current low offer (for bids) or to the current best bid (for offers) and displayed at a price one minimum price increment lower than the offer (for bids) or higher than the bid (for offers).

[4] 17 CFR 242.610.

[5] Securities Exchange Act Release No. 62877 (September 9, 2010), 75 FR 56633 (September 16, 2010) (SR–Phlx–2010–79).

[6] Securities Exchange Act Release No. 57910 (June 3, 2008), 73 FR 32776 (June 10, 2008) (SR–NASDAQ–2008–049).

Comply Order would create a violation of SEC Rule 610(d) by locking or crossing the protected quote of an external market or would cause a violation of SEC Rule 611 by trading through such a protected quote, the order was converted by the NASDAQ system to a Non-Displayed Order, as defined in NASDAQ Rule 4751(e)(3),[7] and re-priced to the current low offer (for bids) or to the current best bid (for offers). Thereafter, such Non-Displayed Orders were cancelled by the NASDAQ system if the market moved through the price of the order after the order was accepted.

The June 2008 amendment changed how the NASDAQ Price to Comply Order operates so that a locking or crossing order is no longer converted to a Non-Displayed Order, but rather is displayed at the most aggressive price possible, one minimum price increment worse than the locking price. NASDAQ also added language to the rule, subsequently mirrored in PSX Rule 3301(f)(8), which noted that NASDAQ may adjust the displayed and undisplayed prices of a Price to Comply Order once or multiple times, depending on the method of order entry and changes to the National Best Bid and Offer (''NBBO''). In its discussion of the rule change, NASDAQ explained that the displayed and undisplayed price of an individual order may be modified one or more times depending upon the manner of order entry into the system. In particular, if a member chooses to enter a Price to Comply Order via NASDAQ's RASH protocol, the order is priced upon entry and may be adjusted multiple times in response to changes in the prevailing NBBO to move the displayed price closer to the original entered price and display the best possible price consistent with the provisions of Regulation NMS. In addition, each time the displayed price is adjusted, the order will receive a new timestamp for purposes of determining its price/time priority according to NASDAQ's existing processing rules. If a Price to Comply Order is entered via NASDAQ's OUCH protocol, however, the order will be repriced only upon entry and the order is not repriced in the event the prevailing NBBO changes. The PSX Price to Comply Order operates in the same manner as the NASDAQ Price to Comply Order.

Phlx is proposing to amend PSX Rule 3301(f)(8) to clarify the effect that the method of order entry has on the processing of the Price to Comply Order. As noted above, the method of entry of a Price to Comply Order determines whether the order is repriced once or multiple times. This will continue to be the case under the amended rule; however, an OUCH subscriber will be afforded the choice to have its Price to Comply Order be subject to repricing either only once or multiple times. Member firms will designate each OUCH protocol order port to use either the single or multiple repricing functionality for Price to Comply Orders entered via that port.[8] A RASH subscriber will continue to have all Price to Comply Orders repriced multiple times, when appropriate. The methodology for repricing Price to Comply Orders will not vary based on how the order is entered. Like RASH-entered Price to Comply Orders, each time the OUCH-entered order is repriced it will receive a new timestamp for purposes of determining its price/time priority. As such, a repriced Price to Comply order is treated as a new order in terms of priority and, as such, there is no guarantee that the OUCH-entered Price to Comply Order will receive priority when it becomes actionable after repricing.

Phlx believes that the new functionality and related rule change will serve to reduce the order traffic received using the OUCH protocol. Phlx notes that, in certain cases, a member will submit a Price to Comply Order at an aggressive price that it anticipates will be at the NBBO. Often such an order is not submitted at the NBBO and is not executed after repricing because the market does not move to the adjusted order price. In these cases, the member firm will typically submit additional aggressive orders, which likewise are not executed. Because the OUCH protocol is used by member firms that are able to submit a large volume of orders, Phlx believes that offering such firms the ability to have Phlx reprice their Price to Comply Orders multiple times will serve to reduce the excessive volume of orders entered into the system which are ultimately canceled.

As noted, Phlx will continue to offer OUCH subscribers an alternative to the multiple repricing functionality so that such member firms may elect to have their locked or crossed Price to Comply Orders repriced only once, consistent with the current process. Phlx believes that this will accommodate member firms that seek the certainty of repricing at most once or whose trading systems depend on the existing repricing mechanism.

Phlx is also making a technical change to PSX Rule 3301(f) to add an omitted subsection (7) to the numbering under the rule, noting that it is reserved for future use.

2. Statutory Basis

Phlx believes that the proposed rule change is consistent with the provisions of Section 6 of the Act,[9] in general, and with Section 6(b)(5) of the Act [10] in particular, in that the proposal is designed to prevent fraudulent and manipulative acts and practices, to promote just and equitable principles of trade, to foster cooperation and coordination with persons engaged in regulating, clearing, settling, processing information with respect to, and facilitating transactions in securities, to remove impediments to and perfect the mechanism of a free and open market and a national market system, and, in general, to protect investors and the public interest. Phlx believes this proposal is consistent with the Exchange Act and, specifically, Rules 610 and 611of Regulation NMS in that it is designed to prevent orders from locking and crossing market or trading through protected quotes, while also promoting a more efficient market. In this regard, Phlx believes that the proposed rule change will promote the efficient use of the Exchange by reducing the number of orders entered into the market and ultimately canceled. As noted, OUCH users tend to enter a relatively large number of aggressive orders that are ultimately canceled after repricing. The proposed rule change will reduce the excessive order traffic experienced by the Exchange due to these cancelled orders and promote the more efficient use of the market by providing OUCH subscribers, who tend to enter the greatest number of such cancelled orders, an option to have the Exchange reprice a single order multiple times. Phlx also believes that permitting a high volume user the option to continue to have the Exchange reprice its Price to Comply Order only upon order entry, when appropriate, will ensure member firms with internal systems that act in reliance of this function will continue to operate without disruption.

[7] ''Non-Displayed Order'' is a limit order that is not displayed in the NASDAQ system, but nevertheless remains available for potential execution against all incoming orders until executed in full or cancelled. Phlx's definition of Non-Displayed Order under Rule 3301(e)(2) mirrors in substance that of NASDAQ's definition.

[8] In the absence of designation from a member firm, Phlx will default the member's OUCH port(s) to single repricing.

[9] 15 U.S.C. 78f.

[10] 15 U.S.C. 78f(b)(5).

B. Self-Regulatory Organization's Statement on Burden on Competition

The Exchange does not believe that the proposed rule change will impose any burden on competition not necessary or appropriate in furtherance of the purposes of the Act.

C. Self-Regulatory Organization's Statement on Comments on the Proposed Rule Change Received From Members, Participants, or Others

Written comments were neither solicited nor received.

III. Date of Effectiveness of the Proposed Rule Change and Timing for Commission Action

Because the foregoing proposed rule change does not: (i) Significantly affect the protection of investors or the public interest; (ii) impose any significant burden on competition; and (iii) become operative for 30 days after the date of the filing, or such shorter time as the Commission may designate, it has become effective pursuant to 19(b)(3)(A) of the Act [11] and Rule 19b–4(f)(6) [12] thereunder.

At any time within 60 days of the filing of the proposed rule change, the Commission summarily may temporarily suspend such rule change if it appears to the Commission that such action is necessary or appropriate in the public interest, for the protection of investors, or otherwise in furtherance of the purposes of the Act. If the Commission takes such action, the Commission shall institute proceedings to determine whether the proposed rule should be approved or disapproved.

IV. Solicitation of Comments

Interested persons are invited to submit written data, views, and arguments concerning the foregoing, including whether the proposed rule change is consistent with the Act. Comments may be submitted by any of the following methods:

Electronic Comments

- Use the Commission's Internet comment form (*http://www.sec.gov/rules/sro.shtml*); or
- Send an email to *rule-comments@sec.gov*. Please include File No. SR–Phlx–2012–62 on the subject line.

Paper Comments

- Send paper comments in triplicate to Elizabeth M. Murphy, Secretary, Securities and Exchange Commission, 100 F Street NE., Washington, DC 20549–1090.

All submissions should refer to File No. SR–Phlx–2012–62. This file number should be included on the subject line if email is used. To help the Commission process and review your comments more efficiently, please use only one method. The Commission will post all comments on the Commission's Internet Web site (*http://www.sec.gov/rules/sro.shtml*). Copies of the submission, all subsequent amendments, all written statements with respect to the proposed rule change that are filed with the Commission, and all written communications relating to the proposed rule change between the Commission and any person, other than those that may be withheld from the public in accordance with the provisions of 5 U.S.C. 552, will be available for Web site viewing and printing in the Commission's Public Reference Room, 100 F Street NE., Washington, DC 20549, on official business days between the hours of 10:00 a.m. and 3:00 p.m. Copies of such filing also will be available for inspection and copying at the principal office of the Exchange. All comments received will be posted without change; the Commission does not edit personal identifying information from submissions. You should submit only information that you wish to make available publicly. All submissions should refer to File No. SR–Phlx–2012–62 and should be submitted on or before June 11, 2012.

For the Commission, by the Division of Trading and Markets, pursuant to delegated authority.[13]

Kevin M. O'Neill,

Deputy Secretary.

[FR Doc. 2012–12195 Filed 5–18–12; 8:45 am]

BILLING CODE 8011–01–P

[11] 15 U.S.C. 78s(b)(3)(A).

[12] 17 CFR 240.19b–4(f)(6). In addition, Rule 19b–4(f)(6) requires a self-regulatory organization to give the Commission written notice of its intent to file the proposed rule change at least five business days prior to the date of filing of the proposed rule change, or such shorter time as designated by the Commission. The Commission notes that the Exchange has satisfied this requirement.

[13] 17 CFR 200.30–3(a)(12).

SECURITIES AND EXCHANGE COMMISSION

[Release No. 34–66994; File No. SR–NYSE–2012–12]

Self-Regulatory Organizations; New York Stock Exchange LLC; Notice of Filing and Immediate Effectiveness of Proposed Rule Change Amending Sections 102.01C and 103.01B of the Exchange's Listed Company Manual To Permit the Listing of Emerging Growth Companies on the Basis of Two Years of Reported Financial Data

May 15, 2012.

Pursuant to Section 19(b)(1) [1] of the Securities Exchange Act of 1934 (the ''Act'') [2] and Rule 19b–4 thereunder,[3] notice is hereby given that, on May 4, 2012, New York Stock Exchange LLC (''NYSE'' or the ''Exchange'') filed with the Securities and Exchange Commission (the ''Commission'') the proposed rule change as described in Items I and II below, which Items have been prepared by the self-regulatory organization. The Commission is publishing this notice to solicit comments on the proposed rule change from interested persons.

I. Self-Regulatory Organization's Statement of the Terms of Substance of the Proposed Rule Change

The Exchange proposes to amend Sections 102.01C and 103.01B of the Exchange's Listed Company Manual (the ''Manual'') to permit the listing of companies on the basis of two years of reported financial data as permitted under the JOBS Act.[4] The text of the proposed rule change is available at the Exchange, the Commission's Public Reference Room, and *www.nyse.com*.

II. Self-Regulatory Organization's Statement of the Purpose of, and Statutory Basis for, the Proposed Rule Change

In its filing with the Commission, the self-regulatory organization included statements concerning the purpose of, and basis for, the proposed rule change and discussed any comments it received on the proposed rule change. The text of those statements may be examined at the places specified in Item IV below. The Exchange has prepared summaries,

[1] 15 U.S.C. 78s(b)(1).

[2] 15 U.S.C. 78a.

[3] 17 CFR 240.19b–4.

[4] The Commission notes that the JOBS Act permits companies that meet the definition of an ''emerging growth company'' to include two years of audited financial data in their registration statement rather than the normally required three years and does not specifically address exchange listings.

set forth in sections A, B, and C below, of the most significant parts of such statements.

A. Self-Regulatory Organization's Statement of the Purpose of, and Statutory Basis for, the Proposed Rule Change

1. Purpose

On April 5, 2012, President Obama signed into law the Jumpstart Our Business Startups Act (the ''JOBS Act''),[5] which amends the Securities Act of 1933 (''Securities Act'') and the Securities Exchange Act of 1934 (''Exchange Act''). Among other things, the JOBS Act amends the Securities Act by adding Section 7(a)(2) and amends Section 13(a) of the Exchange Act. These amendments provide that a company which qualifies as an emerging growth company (''EGC''), as defined in Section 2(a)(19) of the Securities Act and Section 3(a)(80) of the Exchange Act,[6] may choose to include only two years of audited financial data in the registration statement used in connection with the ''first sale of common equity securities of the issuer pursuant to an effective registration statement under the Securities Act of 1933'' (the date of such first sale is defined in Section 101(c) of the JOBS Act as the company's ''initial public offering date''), rather than the three years of audited financial data that had previously been required. In addition, for as long as a company remains an EGC, it is not required to file selected financial data for any period prior to the earliest period for which it had included audited financial statements in its initial public offering registration statement in (i) any subsequent registration statement filed under the Securities Act or (ii) any Exchange Act registration statement. An issuer that is an EGC will continue to be considered an EGC until the earliest of: (i) The last day of the fiscal year during which it had total annual gross revenues of at least $1 billion; (ii) the last day of the fiscal year following the fifth anniversary of its initial public offering date; (iii) the date on which it has, during the previous three-year period, issued more than $1 billion in non-convertible debt; or (iv) the date on which it is considered to be a ''large accelerated filer'' under the Exchange Act.

Certain of the NYSE's financial initial listing standards set forth in Sections 102.01C and 103.01B of the Manual require listing applicants to meet the applicable financial criteria over a period of three fiscal years. As the staff of NYSE Regulation, Inc. bases its determination as to a company's compliance with the financial initial listing standards only on publicly available audited financial data, an EGC which availed itself of the right to file only two years of audited financial data as part of its initial public offering registration statement or subsequent registration statements would be unable to qualify for listing under those particular financial listing standards. The NYSE proposes to amend the initial financial listing standards in Sections 102.01C and 103.01B to permit an EGC to meet the applicable standard on the basis of the two years of audited financial data actually reported, rather than the three years of financial data that would otherwise be required. The proposed amendment would only be applicable to EGCs that actually avail themselves of their ability to report only two years of audited financial information. Under the proposed amendments, EGCs would still be required to meet the same aggregate financial requirements, but would be required to do so over a two-year period rather than a three-year period, if they have availed themselves of the JOBS Act provision allowing EGCs to file only two years of audited financial statements. The Exchange notes that this approach is similar to that taken by Nasdaq with respect to the initial listing standards for its Nasdaq Global Select Market in Nasdaq Marketplace Rules 5310(g) and (h) and that the proposed amended listing standards would not establish lower initial listing requirements than all other national securities exchanges, as the amended standards would still be significantly more stringent than those applied by the Nasdaq Capital Market.

As a result of the changes to the financial reporting requirements applicable to EGCs, the Exchange has decided to amend certain of its initial listing standards to facilitate the listing of EGCs that avail themselves of the ability to report only two years of audited financial data. There are two separate financial listing standards in Section 102.01C which the NYSE proposes to amend, the Domestic Earnings Test and the Domestic Valuation/Revenue with Cash Flow Test. In addition, there are two separate financial listing standards in Section 103.01B which the NYSE proposes to amend, the International Earnings Test and the International Valuation/Revenue with Cash Flow Test.[7]

The Domestic Earnings Test requires that an applicant's earnings must total (x) at least $10 million in the aggregate in the three most recent fiscal years together with a minimum of $2 million in the two most recent years and positive amounts in all three years or (y) at least $12 million in aggregate in the last three years with a minimum of $5 million in the most recent fiscal year and a minimum of $2 million in the next most recent fiscal year. The proposed amendment to the Domestic Earnings Test applicable to EGCs which elect to report only two years of audited financial data would require that the EGC's earnings must total at least $10 million in the aggregate in the two most recent fiscal years together with a minimum of $2 million in each of the two years.

Under the Domestic Valuation/Revenue with Cash Flow Test, the applicant must have (1) At least $500 million in global market capitalization; (2) at least $100 million in revenues during the most recent twelve month period; and (3) an aggregate of at least $25 million in cash flows for the last three fiscal years with positive amounts in all three years. Under the proposed amended Domestic Valuation/Revenue with Cash Flow Test applicable to EGCs that have availed themselves of the JOBS Act provision allowing EGCs to file only two years of audited financial statements, the market capitalization and revenue requirements in (1) and (2) would remain unchanged, but the cash flow requirement in (3) would be amended to require an aggregate of at least $25 million in cash flows for the two most recent fiscal years with positive amounts in both years.

The International Earnings Test requires that an applicant's earnings must total at least $100 million in the aggregate in the three most recent fiscal years together with a minimum of $25 million in the two most recent years. The proposed amendment to the International Earnings Test applicable to EGCs which report only two years of audited financial data would require that the EGC's earnings must total at least $100 million in the aggregate in the two most recent fiscal years together with a minimum of $25 million in each of the two years.

Under the International Valuation/Revenue with Cash Flow Test, the applicant must have (1) At least $500 million in global market capitalization;

[5] Public Law 112–106.

[6] An EGC is defined as an issuer that had total annual gross revenues of less than $1 billion during its most recently completed fiscal year.

[7] Foreign companies are also permitted to list under the initial listing standards in Section 102.01B applicable to domestic companies.

(2) at least $100 million in revenues during the most recent twelve month period; and (3) an aggregate of at least $100 million in cash flows for the last three fiscal years with a minimum of $25 million in each of the two most recent fiscal years. Under the proposed amended International Valuation/Revenue with Cash Flow Test applicable to EGCs that have availed themselves of the JOBS Act provision allowing EGCs to file only two years of audited financial statements, the market capitalization and revenue requirements in (1) and (2) would remain unchanged, but the cash flow requirement in (3) would be amended to require an aggregate of at least $100 million in cash flows for the two most recent two fiscal years with a minimum of $25 million in each of the two years.

2. Statutory Basis

The Exchange believes that the proposed rule change is consistent with Section 6(b) [8] of the Exchange Act in general, and furthers the objectives of Section 6(b)(5) of the Exchange Act,[9] in particular in that it is designed to promote just and equitable principles of trade, to foster cooperation and coordination with persons engaged in regulating, clearing, settling, processing information with respect to, and facilitating transactions in securities, to remove impediments to and perfect the mechanism of a free and open market and a national market system, and, in general, to protect investors and the public interest. The Exchange believes that the proposed amendments are consistent with the protection of investors and the public interest because: (i) The financial requirements for initial listing under the proposed amendments would be the same as those under the Exchange's existing standards, except that companies would need to meet the aggregate financial requirements over a two-year rather than a three-year period; (ii) the proposed amended listing standards are similar to listing standards already applied by the Nasdaq Global Select Market; and (iii) the proposed amended listing standards would not establish lower initial listing requirements than all other national securities exchanges, as the amended standards would still be significantly more stringent than those applied by the Nasdaq Capital Market. In addition, the Exchange notes that the proposed amendments would facilitate the listing of EGCs by the Exchange on the basis of two years of audited financial data, which is the level of financial disclosure permissible for an EGC under the JOBS Act.

B. Self-Regulatory Organization's Statement on Burden on Competition

The Exchange does not believe that the proposed rule change will impose any burden on competition that is not necessary or appropriate in furtherance of the purposes of the Act.

C. Self-Regulatory Organization's Statement on Comments on the Proposed Rule Change Received From Members, Participants or Others

No written comments were solicited or received with respect to the proposed rule change.

III. Date of Effectiveness of the Proposed Rule Change and Timing for Commission Action

The Exchange has filed the proposed rule change pursuant to Section 19(b)(3)(A)(iii) of the Act [10] and Rule 19b–4(f)(6) thereunder.[11] Because the proposed rule change does not: (i) Significantly affect the protection of investors or the public interest; (ii) impose any significant burden on competition; and (iii) become operative prior to 30 days from the date on which it was filed, or such shorter time as the Commission may designate, if consistent with the protection of investors and the public interest, the proposed rule change has become effective pursuant to Section 19(b)(3)(A) of the Act and Rule 19b–4(f)(6)(iii) thereunder.[12]

A proposed rule change filed under Rule 19b–4(f)(6) [13] normally does not become operative prior to 30 days after the date of the filing. However, pursuant to Rule 19b4(f)(6)(iii),[14] the Commission may designate a shorter time if such action is consistent with the protection of investors and the public interest. The Exchange has asked the Commission to waive the 30-day operative delay so that the proposal may become operative immediately upon filing.

The Commission believes that waiving the 30-day operative delay is consistent with the protection of investors and the public interest and, therefore, designates the proposal operative upon filing.[15] The Commission notes that the proposed amendments are similar to rules currently in effect for the Nasdaq Global Select Market and therefore do not raise any novel regulatory issues and would allow the Exchange to list such companies immediately. Furthermore, the Commission notes that the amended listing standards are higher than the initial listing requirements of other national securities exchanges.[16] Finally, the Commission notes that although companies will be allowed to meet certain financial listing standards over a two-year period as opposed to a three-year period as currently required, the aggregate dollar amounts of the financial requirements are remaining the same. Based on the above, the Commission believes that waiving the 30-day operative delay is consistent with the protection of investors and the public interest.

At any time within 60 days of the filing of such proposed rule change, the Commission summarily may temporarily suspend such rule change if it appears to the Commission that such action is necessary or appropriate in the public interest, for the protection of investors, or otherwise in furtherance of the purposes of the Act.

IV. Solicitation of Comments

Interested persons are invited to submit written data, views, and arguments concerning the foregoing, including whether the proposed rule change is consistent with the Act. Comments may be submitted by any of the following methods:

Electronic Comments

- Use the Commission's Internet comment form (*http://www.sec.gov/rules/sro.shtml*); or
- Send an email to *rule-comments@sec.gov*. Please include File Number SR–NYSE–2012–12 on the subject line.

Paper Comments

- Send paper comments in triplicate to Elizabeth M. Murphy, Secretary, Securities and Exchange Commission, 100 F Street NE., Washington, DC 20549–1090.

All submissions should refer to File Number SR–NYSE–2012–12. This file

[8] 15 U.S.C. 78f(b).

[9] 15 U.S.C. 78f(b)(5).

[10] 15 U.S.C. 78s(b)(3)(A)(iii).

[11] 17 CFR 240.19b–4(f)(6).

[12] *Id.* In addition, Rule 19b–4(f)(6) requires a self-regulatory organization to give the Commission written notice of its intent to file the proposed rule change at least five business days prior to the date of filing of the proposed rule change, or such shorter time as designated by the Commission. The Exchange has satisfied this requirement.

[13] 17 CFR 240.19b–4(f)(6).

[14] 17 CFR 240.19b–4(f)(6)(iii).

[15] For purposes only of waiving the 30-day operative delay, the Commission has considered the proposed rule's impact on efficiency, competition, and capital formation. *See* 15 U.S.C. 78c(f).

[16] *See e.g.* NASDAQ Stock Market Rules 5000 Series (detailing listing requirements for the NASDAQ Global Market and NASDAQ Capital Market) and NYSE Amex LLC Company Guide Section 101.

number should be included on the subject line if email is used. To help the Commission process and review your comments more efficiently, please use only one method. The Commission will post all comments on the Commission's Internet Web site (*http://www.sec.gov/rules/sro.shtml*). Copies of the submission, all subsequent amendments, all written statements with respect to the proposed rule change that are filed with the Commission, and all written communications relating to the proposed rule change between the Commission and any person, other than those that may be withheld from the public in accordance with the provisions of 5 U.S.C. 552, will be available for Web site viewing and printing in the Commission's Public Reference Room, 100 F Street NE., Washington, DC 20549, on official business days between the hours of 10:00 a.m. and 3:00 p.m. Copies of the filing also will be available for inspection and copying at the principal office of the Exchange. All comments received will be posted without change; the Commission does not edit personal identifying information from submissions. You should submit only information that you wish to make available publicly. All submissions should refer to File Number SR–NYSE–2012–12 and should be submitted on or before June 11, 2012.

For the Commission, by the Division of Trading and Markets, pursuant to delegated authority.[17]

Kevin M. O'Neill,

Deputy Secretary.

[FR Doc. 2012–12197 Filed 5–18–12; 8:45 am]

BILLING CODE 8011–01–P

[17] 17 CFR 200.30–3(a)(12).

SECURITIES AND EXCHANGE COMMISSION

[Release No. 34–66993; File No. SR–Phlx–2012–63]

Self-Regulatory Organizations; NASDAQ OMX PHLX LLC; Notice of Filing and Immediate Effectiveness of Proposed Rule Change To Establish a Direct Market Data Product, PHLX Orders

May 15, 2012.

Pursuant to Section 19(b)(1) of the Securities Exchange Act of 1934 (''Act'')[1], and Rule 19b–4 thereunder,[2] notice is hereby given that on May 7, 2012, NASDAQ OMX PHLX LLC (''Phlx'' or ''Exchange'') filed with the Securities and Exchange Commission (''SEC'' or ''Commission'') the proposed rule change as described in Items I, II and III below, which Items have been prepared by the Exchange. The Commission is publishing this notice to solicit comments on the proposed rule change from interested persons.

[1] 15 U.S.C. 78s(b)(1).

[2] 17 CFR 240.19b–4.

I. Self-Regulatory Organization's Statement of the Terms of Substance of the Proposed Rule Change

The Exchange proposes to establish a direct market data product, PHLX Orders. PHLX Orders is a data feed that will include full depth of orders on the limit order book for all series of options listed on PHLX.

The text of the proposed rule change is available on the Exchange's Web site at *http://www.nasdaqtrader.com/micro.aspx?id=PHLXRulefilings,* at the principal office of the Exchange, and at the Commission's Public Reference Room.

II. Self-Regulatory Organization's Statement of the Purpose of, and Statutory Basis for, the Proposed Rule Change

In its filing with the Commission, the Exchange included statements concerning the purpose of and basis for the proposed rule change and discussed any comments it received on the proposed rule change. The text of these statements may be examined at the places specified in Item IV below. The Exchange has prepared summaries, set forth in sections A, B, and C below, of the most significant aspects of such statements.

A. Self-Regulatory Organization's Statement of the Purpose of, and the Statutory Basis for, the Proposed Rule Change

1. Purpose

The purpose of the proposed rule change is to establish the PHLX Orders data product. PHLX Orders is a real-time full limit order book data feed that provides pricing information for orders on the PHLX limit order book. PHLX Orders is currently provided as part of the PHLX Top of PHLX Options (''TOPO'') Plus Orders data product, described below. PHLX Orders is a new offering that will provide data that is identical to that which is included in the ''Orders'' portion of the TOPO Plus Orders data product.

In October, 2009, the Exchange made the TOPO Plus Orders data feed available to all market participants.[3] TOPO Plus Orders provides disseminated Exchange top-of-market data (including orders, quotes and trades) to subscribers.

PHLX Orders will provide real-time information to enable users to keep track of the single order book(s), single and complex orders,[4] and Complex Order Live Auction (''COLA'')[5] for all symbols listed on PHLX. PHLX Orders will provide real-time data for the entire book to its users. It is a compilation of data for limit orders residing on the Exchange's limit order book for options traded on the Exchange that the Exchange provides through a real-time data feed. The Exchange updates the information upon receipt of each displayed limit order or change to any order resting on the book.

The Exchange believes that some users do not wish or need to subscribe to the full TOPO Plus Orders market data product; the PHLX Orders data product is being offered to those users that want the order book information provided in TOPO Plus Orders but don't have the need for the entire TOPO Plus Orders data product. Accordingly, the Exchange proposes to make available the PHLX Orders data product for any user that needs or wants only the order book information. The Exchange will continue to offer the TOPO Plus Orders market data product.

The Exchange represents that it will make PHLX Orders equally available to any market participant that wishes to subscribe to it. The Exchange will establish monthly fees for the PHLX Orders data product by way of a separate proposed rule change, which the Exchange will submit after the PHLX Orders product is established.

PHLX Orders will provide subscribers with specific order book data that should enhance their ability to analyze market conditions, and to create and test trading models and analytical strategies. The Exchange believes that PHLX Orders is a valuable tool that subscribers can use to gain comprehensive insight into the limit order book in a particular option.

2. Statutory Basis

PHLX believes that its proposal is consistent with Section 6(b) of the Act[6] in general, and furthers the objectives of

[3] *See* Securities Exchange Act Release No. 60877 (October 26, 2009), 74 FR 56255 (October 30, 2009) (SR–Phlx–2009–92).

[4] A Complex Order is an order involving the simultaneous purchase and/or sale of two or more different options series in the same underlying security, priced as a net debit or credit based on the relative prices of the individual components, for the same account, for the purpose of executing a particular investment strategy. *See* Exchange Rule 1080.08(a)(i).

[5] *See* Exchange Rule 1080.08(e).

[6] 15 U.S.C. 78f(b).

Section 6(b)(5) of the Act[7] in particular, in that it is designed to promote just and equitable principles of trade, to remove impediments to and perfect the mechanism of a free and open market and a national market system, and, in general to protect investors and the public interest, by establishing a market data product that enhances subscribers' ability to make decisions on trading strategy, and by providing data that should help bring about such decisions in a timely manner.

As stated above, the Exchange represents that it will make PHLX Orders equally available to any market participant that wishes to subscribe to it.

B. Self-Regulatory Organization's Statement on Burden on Competition

The Exchange does not believe that the proposed rule change will impose any burden on competition not necessary or appropriate in furtherance of the purposes of the Act.

C. Self-Regulatory Organization's Statement on Comments on the Proposed Rule Change Received From Members, Participants, or Others

Written comments were neither solicited nor received.

III. Date of Effectiveness of the Proposed Rule Change and Timing for Commission Action

Because the foregoing proposed rule change does not: (i) Significantly affect the protection of investors or the public interest; (ii) impose any significant burden on competition; and (iii) become operative for 30 days after the date of the filing, or such shorter time as the Commission may designate, it has become effective pursuant to 19(b)(3)(A) of the Act[8] and Rule 19b–4(f)(6)[9] thereunder.

At any time within 60 days of the filing of the proposed rule change, the Commission summarily may temporarily suspend such rule change if it appears to the Commission that such action is necessary or appropriate in the public interest, for the protection of investors, or otherwise in furtherance of the purposes of the Act. If the Commission takes such action, the Commission shall institute proceedings to determine whether the proposed rule should be approved or disapproved.

IV. Solicitation of Comments

Interested persons are invited to submit written data, views, and arguments concerning the foregoing, including whether the proposed rule change is consistent with the Act. Comments may be submitted by any of the following methods:

Electronic Comments

- Use the Commission's Internet comment form (*http://www.sec.gov/rules/sro.shtml*); or
- Send an email to *rule-comments@sec.gov.* Please include File No. SR–Phlx–2012–63 on the subject line.

Paper Comments

- Send paper comments in triplicate to Elizabeth M. Murphy, Secretary, Securities and Exchange Commission, 100 F Street NE., Washington, DC 20549–1090.

All submissions should refer to File No. SR–Phlx–2012–63. This file number should be included on the subject line if email is used. To help the Commission process and review your comments more efficiently, please use only one method. The Commission will post all comments on the Commission's Internet Web site (*http://www.sec.gov/rules/sro.shtml*). Copies of the submission, all subsequent amendments, all written statements with respect to the proposed rule change that are filed with the Commission, and all written communications relating to the proposed rule change between the Commission and any person, other than those that may be withheld from the public in accordance with the provisions of 5 U.S.C. 552, will be available for Web site viewing and printing in the Commission's Public Reference Room, 100 F Street NE., Washington, DC 20549, on official business days between the hours of 10:00 a.m. and 3:00 p.m. Copies of such filing also will be available for inspection and copying at the principal office of the Exchange. All comments received will be posted without change; the Commission does not edit personal identifying information from submissions. You should submit only information that you wish to make available publicly. All submissions should refer to File No. SR–Phlx–2012–63 and should be submitted on or before June 11, 2012.

For the Commission, by the Division of Trading and Markets, pursuant to delegated authority.[10]

Kevin M. O'Neill,

Deputy Secretary.

[FR Doc. 2012–12196 Filed 5–18–12; 8:45 am]

BILLING CODE 8011–01–P

[7] 15 U.S.C. 78f(b)(5).

[8] 15 U.S.C. 78s(b)(3)(A).

[9] 17 CFR 240.19b–4(f)(6). In addition, Rule 19b–4(f)(6) requires a self-regulatory organization to give the Commission written notice of its intent to file the proposed rule change at least five business days prior to the date of filing of the proposed rule change, or such shorter time as designated by the Commission. The Commission notes that the Exchange has satisfied this requirement.

[10] 17 CFR 200.30–3(a)(12).

SOCIAL SECURITY ADMINISTRATION

[Docket No. SSA–2012–0031]

Occupational Information Development Advisory Panel Meeting

AGENCY: Social Security Administration (SSA).

ACTION: Notice of upcoming panel teleconference meeting.

DATES: June 4, 2012, 10:00 a.m. to 12:00 p.m. (EDT).

Call-in number: (888) 504–7964.

Pass code: 3095774.

Leader/Host: Leola S. Brooks.

SUPPLEMENTARY INFORMATION: *Type of meeting:* The teleconference meeting is open to the public.

Purpose: The Occupational Information Development Advisory Panel (Panel) is a discretionary panel, established under the Federal Advisory Committee Act of 1972, as amended. The Panel provides independent advice and recommendations to us on the creation of an occupational information system for use in our disability programs and for our adjudicative needs. We require advice on the research design of the Occupational Information System, including the development and testing of a content model and taxonomy, work analysis instrumentation, sampling, and data collection and analysis.

Agenda: The Designated Federal Officer will post the meeting agenda on the Internet at *http://www.ssa.gov/oidap/meeting_information.htm* at least one week prior to the start date. You can also receive a copy electronically by email or by fax, upon request. We retain copies of all proceedings, available for public inspection by appointment at the Panel's office.

The Panel will not hear public comment during this teleconference meeting.

Contact Information: Anyone requiring information regarding the Panel should contact the staff by: Mail addressed to the Occupational Information Development Advisory Panel, Social Security Administration, 6401 Security Boulevard, Robert M. Ball Federal Building, 3–E–26, Baltimore,

MD 21235, fax to (410) 597–0825, or Email to *OIDAP@ssa.gov*.

Leola S. Brooks,

Designated Federal Officer, Occupational Information Development Advisory Panel.

[FR Doc. 2012–12088 Filed 5–18–12; 8:45 am]

BILLING CODE 4191–02–P

DEPARTMENT OF STATE

[Public Notice 7891; OMB Control Number 1405–0098; Form Number DSP–0122]

60-Day Notice of Proposed Information Collection: Supplemental Registration for the Diversity Immigrant Visa Program

ACTION: Notice of request for public comments.

SUMMARY: The Department of State is seeking Office of Management and Budget (OMB) approval for the information collection described below. The purpose of this notice is to allow 60 days for public comment in the **Federal Register** preceding submission to OMB. We are conducting this process in accordance with the Paperwork Reduction Act of 1995.

- *Title of Information Collection:* Supplemental Registration for the Diversity Immigrant Visa Program.
- *OMB Control Number:* 1405–0098.
- *Type of Request:* Extension.
- *Originating Office:* CA/VO/L/R.
- *Form Number:* DSP–0122.
- *Respondents:* Diversity Visa applicants.
- *Estimated Number of Respondents:* 60,000.
- *Estimated Number of Responses:* 60,000.
- *Average Hours per Response:* 30 minutes.
- *Total Estimated Burden:* 30,000 hours.
- *Frequency:* Once per application.
- *Obligation to Respond:* Required to obtain benefit.

DATES: The Department will accept comments from the public up to 60 days from May 21, 2012.

ADDRESSES: • *Web:* Persons with access to the Internet may view and comment on this notice by going to the Federal regulations Web site at *www.regulations.gov.* You can search for the document by: selecting ''Notice'' under Document Type, entering the Public Notice number as the ''Keyword or ID'', checking the ''Open for Comment'' box, and then click ''Search''. If necessary, use the ''Narrow by Agency'' option on the Results page.

• *Mail (paper, or CD–ROM submissions):* Chief, Legislation and Regulations Division, Visa Services—DSP–0122, 2401 E. Street NW., Washington DC 20520–30106.

You must include the DS form number (if applicable), information collection title, and OMB control number in any correspondence.

FOR FURTHER INFORMATION CONTACT: Direct requests for additional information regarding the collection listed in this notice, including requests for copies of the proposed information collection and supporting documents, to Sydney Taylor, Visa Services, U.S. Department of State, 2401 E. Street NW., L–603, Washington, DC 20522, who may be reached at *taylors2@state.gov.*

SUPPLEMENTARY INFORMATION: We are soliciting public comments to permit the Department to:

- Evaluate whether the proposed information collection is necessary for the proper performance of our functions.
- Evaluate the accuracy of our estimate of the burden of the proposed collection, including the validity of the methodology and assumptions used.
- Enhance the quality, utility, and clarity of the information to be collected.
- Minimize the reporting burden on those who are to respond, including the use of automated collection techniques or other forms of technology.

Abstract of Proposed Collection

Each time the Diversity Visa lottery is conducted, the Kentucky Consular Center (KCC) will register the randomly selected entries and send the applicants an Instruction Package for Immigrant Visa Applicants, which consists of DS–122 (Supplemental Registration for the Diversity Immigrant Visa Program) and DS–230 (Application for Immigrant Visa and Alien Registration Part I and II). In order for an applicant to be considered for a visa, the applicant must complete and return both of the above-mentioned forms to KCC. Upon receipt of these forms, KCC will transmit the Immigrant Visa Appointment Package to the US Embassy or Consulate and schedule an appointment for the applicant.

Methodology

Applicants must return the completed form to the KCC via mail.

Dated: May 10, 2012.

Edward Ramotowski,

Managing Director, Visa Services, Bureau of Consular Affairs, Department of State.

[FR Doc. 2012–12252 Filed 5–18–12; 8:45 am]

BILLING CODE 4701–06–P

DEPARTMENT OF STATE

[Public Notice 7892; OMB Control Number 1405–xxxx; Form Number: SV2011–0031]

30–Day Notice of Proposed Information Collection: English Language Evaluation Surveys

ACTION: Notice of request for public comment and submission to OMB of proposed collection of information.

SUMMARY: To meet OMB and Congressional reporting requirements, this request for a new information collection clearance will allow ECA/P/V, as part of the English Language Evaluation, to conduct surveys of participants in the ETA Program, E-Teacher Scholarship program, and the English Language Specialist Program. Participants are those who went on the programs between the years of 2004 and 2009. Collecting this data will help ECA/P/V assess the impact the programs have had on the respective participants, as well as the effectiveness of these programs in meeting their goals.

- *Title of Information Collection:* English Language Evaluation: Fulbright English Teaching Assistantship (ETA) Program Survey.
- *OMB Control Number:* None.
- *Type of Request:* New Collection.
- *Originating Office:* Bureau of Educational and Cultural Affairs, Office of Policy and Evaluation, Evaluation Division (ECA/P/V).
- *Form Number:* SV2011–0031.
- *Respondents:* U.S. participants of the ETA program from 2004–2009.
- *Estimated Number of Respondents:* 2,350 annually.
- *Estimated Number of Responses:* 2,350 annually.
- *Average Hours per Response:* 40 minutes.
- *Total Estimated Burden:* 1,567 hours annually.
- *Frequency:* One time.
- *Obligation to Respond:* Voluntary.
- *Title of Information Collection:* English Language Evaluation: English Language Specialist Program Survey.
- *OMB Control Number:* None.
- *Type of Request:* New Collection.
- *Originating Office:* Bureau of Educational and Cultural Affairs, Office of Policy and Evaluation, Evaluation Division (ECA/P/V).
- *Form Number:* SV2011–0032.
- *Respondents:* U.S. Participants of the English Language Specialist Program from 2004–2009.
- *Estimated Number of Respondents:* 250 annually.
- *Estimated Number of Responses:* 250 annually.
- *Average Hours per Response:* 40 minutes.

- *Total Estimated Burden:* 167 hours annually.
- *Frequency:* One time.
- *Obligation to Respond:* Voluntary.
- *Title of Information Collection:* English Language Evaluation: E-Teacher Scholarship Program Survey.
- *OMB Control Number:* None.
- *Type of Request:* New Collection.
- *Originating Office:* Bureau of Educational and Cultural Affairs, Office of Policy and Evaluation, Evaluation Division (ECA/P/V).
- *Form Number:* SV2011–0033.
- *Respondents:* International participants of the E–Teacher Scholarship Program from 2004–2009.
- *Estimated Number of Respondents:* 800 annually.
- *Estimated Number of Responses:* 800 annually.
- *Average Hours per Response:* 40 minutes.
- *Total Estimated Burden:* 533 hours annually.
- *Frequency:* One time.

Obligation to Respond: Voluntary.

DATES: Submit comments to the Office of Management and Budget (OMB) for up to 30 days from May 21, 2012.

ADDRESSES: Direct comments to the Department of State Desk Officer in the Office of Information and Regulatory Affairs at the Office of Management and Budget (OMB). You may submit comments by the following methods:

- *Email: oira_submission@omb.eop.gov.* You must include the DS form number, information collection title, and OMB control number in the subject line of your message.
- *Fax:* 202–395–5806. Attention: Desk Officer for Department of State.

FOR FURTHER INFORMATION CONTACT: You may obtain copies of the proposed information collection and supporting documents from Michelle Hale, ECA/P/V, SA–5, C2 Floor, Department of State, Washington, DC 20522 who may be reached on 202–632–6312 or at *HaleMJ2@state.gov.*

SUPPLEMENTARY INFORMATION: We are soliciting public comments to permit the Department to:

- Evaluate whether the proposed information collection is necessary to properly perform our functions.
- Evaluate the accuracy of our estimate of the burden of the proposed collection, including the validity of the methodology and assumptions used.
- Enhance the quality, utility, and clarity of the information to be collected.
- Minimize the reporting burden on those who are to respond.

Abstract of Proposed Collection

To meet OMB and Congressional reporting requirements, this request for a new information collection clearance will allow ECA/P/V, as part of the English Language Evaluation, to conduct surveys of participants in the ETA Program, E-Teacher Scholarship program, and the English Language Specialist Program. Participants are those who went on the programs between the years of 2004 and 2009. Collecting this data will help ECA/P/V assess the impact the programs have had on the respective participants, as well as the effectiveness of these programs in meeting their goals.

Methodology

For all three surveys, the evaluation data will be collected via Vovici, an on-line surveying tool.

Dated: April 25, 2012.

Matt Lussenhop,

Director of the Office of Policy and Evaluation, Bureau of Educational and Cultural Affairs, Department of State.

[FR Doc. 2012–12254 Filed 5–18–12; 8:45 am]

BILLING CODE 4710–05–P

DEPARTMENT OF TRANSPORTATION

Federal Highway Administration

Environmental Impact Statement: Wiscasset and Edgecomb, Lincoln County, ME

AGENCY: Federal Highway Administration (FHWA), DOT.

ACTION: Notice of Intent to Terminate (Withdraw) EIS.

SUMMARY: The FHWA is issuing this notice to advise the public that the Environmental Impact Statement (EIS) process for a proposed highway project in the Towns of Wiscasset and Edgecomb, Lincoln County, Maine is terminated. The original Notice of Intent for this EIS process was published in the **Federal Register** on July 29, 2002.

FOR FURTHER INFORMATION CONTACT: Mark Hasselmann, Right of Way and Environmental Programs Manager, Federal Highway Administration, Maine Division, 40 Western Avenue, Augusta, Maine 04330, Telephone (207) 622–8350, extension 103; or Gerry Audibert, P.E., Project Manager, Maine Department of Transportation, State House Station 16, Augusta, Maine 04333–0016, Telephone (207) 624–3000.

SUPPLEMENTARY INFORMATION: The FHWA, in cooperation with the Maine Department of Transportation (MaineDOT), has terminated the EIS process begun in 2002. Work on the EIS is being discontinued due to findings that were identified during the National Environmental Policy Act (NEPA) process. In particular, the preferred alternative could no longer be considered by the U.S. Army Corps of Engineers (USACE) as the Least Environmentally Damaging Practicable Alternative (LEDPA) and there was a lack of community support. Therefore, the EIS for this project has been terminated.

(Catalog of Federal Domestic Assistance Program Number 20.205, Highway Planning and Construction. The regulations implementing Executive Order 12372 regarding intergovernmental consultation on Federal programs and activities apply to this program.)

Authority: 23 U.S.C. 315; 49 CFR 1.48.

Issued on: May 14, 2012.

Todd D. Jorgensen,

Division Administrator, Federal Highway Administration, Augusta, Maine.

[FR Doc. 2012–12052 Filed 5–18–12; 8:45 am]

BILLING CODE 4910–22–M

DEPARTMENT OF TRANSPORTATION

Federal Aviation Administration

Ninth Meeting: RTCA Special Committee 222, Inmarsat Aeronautical Mobile Satellite (Route) Services

AGENCY: Federal Aviation Administration (FAA), U.S. Department of Transportation (DOT).

ACTION: Meeting Notice of RTCA Special Committee 222, Inmarsat Aeronautical Mobile Satellite (Route) Services.

SUMMARY: The FAA is issuing this notice to advise the public of the Ninth meeting of RTCA Special Committee 222, Inmarsat Aeronautical Mobile Satellite (Route) Services.

DATES: The meeting will be held June 12–13, 2012, from 8:30 a.m.–3:00 p.m.

ADDRESSES: The meeting will be held at JW Marriott Hotel, 1109 Brickell Avenue Miami, FL 33131.

FOR FURTHER INFORMATION CONTACT: The RTCA Secretariat, 1150 18th Street NW., Suite 910, Washington, DC 20036, or by telephone at (202) 833–9339, fax at (202) 833–9434, or Web site at *http://www.rtca.org.*

SUPPLEMENTARY INFORMATION: Pursuant to section 10(a)(2) of the Federal Advisory Committee Act (Pub. L. 92–463, 5 U.S.C., App.), notice is hereby given for a meeting of Special Committee 222. The agenda will include the following:

June 12, 2012

1:00 a.m.–5:00 p.m.

June 13, 2012

8:30 a.m.–12:00 p.m.

- Greetings & Attendance
- Review report of November 2011 meeting.
- Chair report on PMC actions
- Detailed review of generic MASPS draft. This completely redesigned MASPS draft is the result of direction received at the March 21, 2011 meeting of the PMC. A detailed review and informal approval of the document is expected at this meeting, to facilitate timely progress on Inmarsat SwiftBroadband-specific material.
- Status and update on SBB-specific material for MASPS.
- Status and update of SBB-specific material for DO–262A
- Other items
- Schedule for 10th Plenary
- Plenary Adjourns
- A meeting of SC–222 leadership team will be held on Wednesday morning. The room can be available for informal working sessions leading to progress on the DO–262A MOPS, modifications to the DO–210D MOPS, and/or SwiftBroadband-specific material in accordance with the draft generic MASPS. The room will be available through 12 Noon on Wednesday for informal working group meetings in parallel with scheduled meetings of the Inmarsat Aero Conference, if desired.

*This meeting is being held in parallel with the Inmarsat Aero Conference to facilitate the in-person participation of as many equipment manufacturers as practical. Attendance at the SC–222 meeting does not include admittance to the Inmarsat Aero Conference.

Attendance is open to the interested public but limited to space availability. With the approval of the chairman, members of the public may present oral statements at the meeting. Persons wishing to present statements or obtain information should contact the person listed in the **FOR FURTHER INFORMATION CONTACT** section. Members of the public may present a written statement to the committee at any time.

Issued in Washington, DC, on May 9, 2012.

John Raper,

Manager, Business Operations Branch, Federal Aviation Administration.

[FR Doc. 2012–12057 Filed 5–18–12; 8:45 am]

BILLING CODE 4910–13–P

DEPARTMENT OF TRANSPORTATION

Federal Aviation Administration

Notice of Opportunity for Public Comment on Surplus Property Release at Michael J Smith Field, Beaufort, NC

AGENCY: Federal Aviation Administration (FAA), DOT.

ACTION: Notice.

SUMMARY: Under the provisions of Title 49, U.S.C. Section 47153(c), notice is being given that the FAA is considering a request from the Beaufort-Morehead City Airport Authority to waive the requirement that approximately 7.5 acres of airport property, located at the Michael J Smith Field, be used for aeronautical purposes.

DATES: Comments must be received on or before June 20, 2012.

ADDRESSES: Comments on this notice may be mailed or delivered in triplicate to the FAA at the following address: Atlanta Airports District Office, Attn: Rusty Nealis, Program Manager, 1701 Columbia Ave., Suite 2–260, Atlanta, GA 30337–2747.

In addition, one copy of any comments submitted to the FAA must be mailed or delivered to Ken Lohr, Chairman, Beaufort-Morehead City Airport Authority at the following address: Beaufort-Morehead City Airport Authority, P.O. Box 875, Beaufort, NC 28516–0875.

FOR FURTHER INFORMATION CONTACT: Rusty Nealis, Program Manager, Atlanta Airports District Office, 1701 Columbia Ave., Campus Building, Suite 2–260, Atlanta, GA 30337–2747, (404) 305–7142. The application may be reviewed in person at this same location.

SUPPLEMENTARY INFORMATION: The FAA is reviewing a request by the Beaufort-Morehead City Airport Authority to release approximately 7.5 acres of airport property at the Michael J Smith Field. The property consists of one parcel located on the north side of West Beaufort Road. The proposed use of this land is for the realignment of US 70 and is compatible with airport operations. Any person may inspect the request in person at the FAA office listed above under **FOR FURTHER INFORMATION CONTACT**. In addition, any person may, upon request, inspect the request, notice and other documents germane to the request in person at the Michael J Smith Airport.

Issued in Atlanta, Georgia on May 8, 2012.

Larry F. Clark,

Acting Manager, Atlanta Airports District Office, Southern Region.

[FR Doc. 2012–12053 Filed 5–18–12; 8:45 am]

BILLING CODE 4910–13–M

DEPARTMENT OF TRANSPORTATION

Federal Railroad Administration

[Docket Number FRA–2012–0036]

Petition for Alternative Locomotive Crashworthiness Design

In accordance with Part 211 of Title 49 Code of Federal Regulations (CFR), this document provides the public notice that by a document dated March 2, 2012, the National Railroad Passenger Corporation (Amtrak) has petitioned the Federal Railroad Administration (FRA) for approval of alternative locomotive crashworthiness design for an electric locomotive, Model ACS–64, built by Siemens Industry, Inc. This request is made in accordance with the provisions prescribed in 49 CFR 229.209. FRA assigned the petition Docket Number FRA–2012–0036.

The alternative design incorporates crash energy management features, detailed in the petition and attachments, in lieu of collision and corner posts as required by 49 CFR 229.205. Amtrak states that the performance of this design is equivalent to that obtained through traditional structural requirements. Further, Amtrak states that the design will fully comply with the requirements of Appendix F to 49 CFR part 238.

A copy of the petition, as well as any written communications concerning the petition, is available for review online at *http://www.regulations.gov* and in person at the U.S. Department of Transportation's (DOT) Docket Operations Facility, 1200 New Jersey Avenue SE., W12–140, Washington, DC 20590. The Docket Operations Facility is open from 9 a.m. to 5 p.m., Monday through Friday, except Federal Holidays.

Interested parties are invited to participate in these proceedings by submitting written views, data, or comments. FRA does not anticipate scheduling a public hearing in connection with these proceedings since the facts do not appear to warrant a hearing. If any interested party desires an opportunity for oral comment, they should notify FRA, in writing, before the end of the comment period and specify the basis for their request.

All communications concerning these proceedings should identify the

appropriate docket number and may be submitted by any of the following methods:

- *Web site: http://www.regulations.gov.* Follow the online instructions for submitting comments.
- *Fax:* 202–493–2251.
- *Mail:* Docket Operations Facility, U.S. Department of Transportation, 1200 New Jersey Avenue SE., W12–140, Washington, DC 20590.
- *Hand Delivery:* 1200 New Jersey Avenue SE., Room W12–140, Washington, DC 20590, between 9 a.m. and 5 p.m., Monday through Friday, except Federal Holidays.

Communications received by July 20, 2012 will be considered by FRA before final action is taken. Comments received after that date will be considered as far as practicable.

Anyone is able to search the electronic form of any written communications and comments received into any of our dockets by the name of the individual submitting the comment (or signing the comment, if submitted on behalf of an association, business, labor union, etc.). You may review DOT's complete Privacy Act Statement in the **Federal Register** published on April 11, 2000 (Volume 65, Number 70; Pages 19477–78), or online at *http://www.dot.gov/privacy.html.*

Issued in Washington, DC, on May 10, 2012.

Ron Hynes,

Acting Deputy Associate Administrator for Regulatory and Legislative Operations.

[FR Doc. 2012–12291 Filed 5–18–12; 8:45 am]

BILLING CODE 4910–06–P

DEPARTMENT OF TRANSPORTATION

Federal Railroad Administration

[Docket Number FRA–2012–0022]

Petition for Waiver of Compliance

In accordance with Part 211 of Title 49 Code of Federal Regulations (CFR), this document provides the public notice that by a document dated January 6, 2012, the Cass Scenic Railroad State Park (CASS) has petitioned the Federal Railroad Administration (FRA) for a waiver of compliance from certain provisions of the Federal railroad safety regulations contained at 49 CFR. FRA assigned the petition Docket Number FRA–2012–0022.

Specifically, CASS seeks a waiver of compliance for five freight cars from 49 CFR 215.303, which requires stenciling on restricted freight cars; and 49 CFR 231.1(a)3(i), which requires that ''[t]he hand brake shall be so located that it can be safely operated while car is in motion.'' In this same docket, CASS was previously granted a Special Approval for these same five overage cars, permitting them to continue in service beyond 50 years from the date of construction in accordance with 49 CFR 215.203(c).

CASS stated that two of the five cars in this petition were built as 40-foot steel frame cars to carry logs. Their exact ages are unknown but they are thought to have been constructed in the 1940s. The third car is a 40-foot flatcar built in the 1950s. The fourth car is a 40-foot tank car built in the 1950s. The fifth car is a 40-foot hopper car built in 1958. The hand brakes on these five cars cannot be used while the cars are in motion. The hand brakes can only be manually applied when the cars are at rest, using a ratchet lever at the end of the frame.

CASS stated that there are occasions where they used these cars in special charter trains for photographic purposes only. There are usually two or three such charter trains operated each year. Passengers are not carried on the cars or on the trains in which the cars are operated. The cars subject to this petition do not exceed a speed of 10 mph.

A copy of the petition, as well as any written communications concerning the petition, is available for review online at *www.regulations.gov* and in person at the U.S. Department of Transportation's (DOT) Docket Operations Facility, 1200 New Jersey Avenue SE., W12–140, Washington, DC 20590. The Docket Operations Facility is open from 9 a.m. to 5 p.m., Monday through Friday, except Federal Holidays.

Interested parties are invited to participate in these proceedings by submitting written views, data, or comments. FRA does not anticipate scheduling a public hearing in connection with these proceedings since the facts do not appear to warrant a hearing. If any interested party desires an opportunity for oral comment, they should notify FRA, in writing, before the end of the comment period and specify the basis for their request.

All communications concerning these proceedings should identify the appropriate docket number and may be submitted by any of the following methods:

- *Web site: http://www.regulations.gov/.* Follow the online instructions for submitting comments.
- *Fax:* 202–493–2251.
- *Mail:* Docket Operations Facility, U.S. Department of Transportation, 1200 New Jersey Avenue SE., W12–140, Washington, DC 20590.
- *Hand Delivery:* 1200 New Jersey Avenue SE., Room W12–140, Washington, DC 20590, between 9 a.m. and 5 p.m., Monday through Friday, except Federal Holidays.

Communications received by July 5, 2012 will be considered by FRA before final action is taken. Comments received after that date will be considered as far as practicable.

Anyone is able to search the electronic form of any written communications and comments received into any of our dockets by the name of the individual submitting the comment (or signing the comment, if submitted on behalf of an association, business, labor union, etc.). You may review DOT's complete Privacy Act Statement in the **Federal Register** published on April 11, 2000 (Volume 65, Number 70; Pages 19477–78) or online at *http://www.dot.gov/privacy.html.*

Issued in Washington, DC, on May 10, 2012.

Ron Hynes,

Acting Deputy Associate Administrator for Regulatory and Legislative Operations.

[FR Doc. 2012–12294 Filed 5–18–12; 8:45 am]

BILLING CODE 4910–06–P

DEPARTMENT OF TRANSPORTATION

Federal Railroad Administration

[Docket Number FRA–2012–0041]

Petition for Waiver of Compliance

In accordance with Part 211 of Title 49 Code of Federal Regulations (CFR), this document provides the public notice that by a document dated April 4, 2012, the Metropolitan Transportation Authority Metro-North Commuter Railroad (MNCW) has petitioned the Federal Railroad Administration (FRA) for a waiver of compliance from certain provisions of the Federal railroad safety regulations contained at 49 CFR part 236. FRA assigned the petition Docket Number FRA–2012–0041.

MNCW seeks relief from the 2-year periodic testing requirements of the rules, standards, and instructions found at 49 CFR Sections 236.377, Approach locking; 236.378, Time locking; 236.379, Route locking; 236.380, Indication locking; and 236.381, Traffic locking on vital microprocessor-based systems. MNCW proposes to verify and test signal locking systems controlled by microprocessor-based equipment by use of alternative procedures every 4 years after initial baseline testing or program change as follows:

• Verify the cyclic redundancy check/checksum/universal control number of the existing location's specific application logic to the previously tested version that is maintained in MNCW's Software Management Control Plan per requirements of 49 CFR 236.18.

• Test associated hardware connections outside the processor to verify that inputs from switch indication, searchlight signal (where provided), track indication, or other vital inputs to the processor yield the intended output to switches or other devices intended to be locked in the field.

• Analyze and compare results of each 4-year alternative test with the results of the baseline testing performed at the location, and submit results to FRA. MNCW submitted a list with their petition of 28 signal locations currently in service and subject to the relief being requested.

A copy of the petition, as well as any written communications concerning the petition, is available for review online at *www.regulations.gov* and in person at the U.S. Department of Transportation's (DOT) Docket Operations Facility, 1200 New Jersey Avenue SE., W12–140, Washington, DC 20590. The Docket Operations Facility is open from 9 a.m. to 5 p.m., Monday through Friday, except Federal Holidays.

Interested parties are invited to participate in these proceedings by submitting written views, data, or comments. FRA does not anticipate scheduling a public hearing in connection with these proceedings since the facts do not appear to warrant a hearing. If any interested party desires an opportunity for oral comment, they should notify FRA, in writing, before the end of the comment period and specify the basis for their request.

All communications concerning these proceedings should identify the appropriate docket number and may be submitted by any of the following methods:

• *Web site: http://www.regulations.gov.* Follow the online instructions for submitting comments.

• *Fax:* 202–493–2251.

• *Mail:* Docket Operations Facility, U.S. Department of Transportation, 1200 New Jersey Avenue SE., W12–140, Washington, DC 20590.

• *Hand Delivery:* 1200 New Jersey Avenue SE., Room W12–140, Washington, DC 20590, between 9 a.m. and 5 p.m., Monday through Friday, except Federal Holidays.

Communications received by July 5, 2012 will be considered by FRA before final action is taken. Comments received after that date will be considered as far as practicable.

Anyone is able to search the electronic form of any written communications and comments received into any of our dockets by the name of the individual submitting the comment (or signing the comment, if submitted on behalf of an association, business, labor union, etc.). You may review DOT's complete Privacy Act Statement in the **Federal Register** published on April 11, 2000 (Volume 65, Number 70; Pages 19477–78), or online at *http://www.dot.gov/privacy.html.*

Issued in Washington, DC, on May 10, 2012.

Ron Hynes,

Acting Deputy Associate Administrator for Regulatory and Legislative Operations.

[FR Doc. 2012–12293 Filed 5–18–12; 8:45 am]

BILLING CODE 4910–06–P

DEPARTMENT OF TRANSPORTATION

Maritime Administration

[Docket No. MARAD–2012 0061]

Requested Administrative Waiver of the Coastwise Trade Laws: Vessel WINDSONG; Invitation for Public Comments

AGENCY: Maritime Administration, Department of Transportation.

ACTION: Notice.

SUMMARY: As authorized by 46 U.S.C. 12121, the Secretary of Transportation, as represented by the Maritime Administration (MARAD), is authorized to grant waivers of the U.S.-build requirement of the coastwise laws under certain circumstances. A request for such a waiver has been received by MARAD. The vessel, and a brief description of the proposed service, is listed below.

DATES: Submit comments on or before June 20, 2012.

ADDRESSES: Comments should refer to docket number MARAD–2012–0061. Written comments may be submitted by hand or by mail to the Docket Clerk, U.S. Department of Transportation, Docket Operations, M–30, West Building Ground Floor, Room W12–140, 1200 New Jersey Avenue SE., Washington, DC 20590. You may also send comments electronically via the Internet at *http://www.regulations.gov.* All comments will become part of this docket and will be available for inspection and copying at the above address between 10 a.m. and 5 p.m., E.T., Monday through Friday, except federal holidays. An electronic version of this document and all documents entered into this docket is available on the World Wide Web at *http://www.regulations.gov.*

FOR FURTHER INFORMATION CONTACT: Joann Spittle, U.S. Department of Transportation, Maritime Administration, 1200 New Jersey Avenue SE., Room W21–203, Washington, DC 20590. Telephone 202–366–5979, Email *Joann.Spittle@dot.gov.*

SUPPLEMENTARY INFORMATION: As described by the applicant the intended service of the vessel WINDSONG is:

Intended Commercial Use of Vessel: ''6 passenger sailing charter.''

Geographic Region: ''Maine, New Hampshire, Massachusetts, Rhode Island, Connecticut, New York, New Jersey, Maryland, Delaware, Virginia, North Carolina, South Carolina, Georgia, and Florida.''The complete application is given in DOT docket MARAD–2012–0061 at *http://www.regulations.gov.* Interested parties may comment on the effect this action may have on U.S. vessel builders or businesses in the U.S. that use U.S.-flag vessels. If MARAD determines, in accordance with 46 U.S.C. 12121 and MARAD's regulations at 46 CFR part 388, that the issuance of the waiver will have an unduly adverse effect on a U.S.-vessel builder or a business that uses U.S.-flag vessels in that business, a waiver will not be granted. Comments should refer to the docket number of this notice and the vessel name in order for MARAD to properly consider the comments. Comments should also state the commenter's interest in the waiver application, and address the waiver criteria given in § 388.4 of MARAD's regulations at 46 CFR part 388.

Privacy Act

Anyone is able to search the electronic form of all comments received into any of our dockets by the name of the individual submitting the comment (or signing the comment, if submitted on behalf of an association, business, labor union, etc.). You may review DOT's complete Privacy Act Statement in the **Federal Register** published on April 11, 2000 (Volume 65, Number 70; Pages 19477–78).

By Order of the Maritime Administrator.

Dated: May 15, 2012.

Julie P. Agarwal,

Secretary, Maritime Administration.

[FR Doc. 2012–12216 Filed 5–18–12; 8:45 am]

BILLING CODE 4910–81–P

DEPARTMENT OF THE TREASURY

Fiscal Service

Financial Management Service Proposed Collection of Information: Resolution Authorizing Execution of Depositary, Financial Agency, and Collateral Agreement; and Depositary, Financial Agency, and Collateral Agreement

AGENCY: Financial Management Service, Fiscal Service, Treasury.

ACTION: Notice and request for comments.

SUMMARY: The Financial Management Service, as part of its continuing effort to reduce paperwork and respondent burden, invites the general public and other Federal agencies to take this opportunity to comment on a continuing information collection. By this notice, the Financial Management Service solicits comments concerning forms ''Resolution Authorizing Execution of Depositary, Financial Agency, and Collateral Agreement; and Depositary, Financial Agency, and Collateral Agreement.''

DATES: Written comments should be received on or before July 20, 2012.

ADDRESSES: Direct all written comments to Financial Management Service, 3700 East West Highway, Records and Information Management Program Staff, Room 135, Hyattsville, Maryland 20782.

FOR FURTHER INFORMATION CONTACT: Requests for additional information or copies of the form(s) and instructions should be directed to Mary Bailey, Bank Policy and Oversight Division, 401 14th Street SW., Room 317, Washington, DC 20227, (202) 874–7055.

SUPPLEMENTARY INFORMATION: Pursuant to the Paperwork Reduction Act of 1995, (44 U.S.C. 3506(c)(2)(A)), the Financial Management Service solicits comments on the collection of information described below:

Title: Resolution Authorizing Execution of Depositary, Financial Agency, and Collateral Agreement; and Depositary, Financial Agency, and Collateral Agreement.

OMB Number: 1510–0067.

Form Number: FMS 5902; FMS 5903.

Abstract: These forms are used to give authority to financial institutions to become a depositary of the Federal Government. They also execute an agreement from the financial institutions they are authorized to pledge collateral to secure public funds with Federal Reserve Banks or their designees.

Current Actions: Extension of currently approved collection.

Type of Review: Regular.

Affected Public: Business or other for-profit.

Estimated Number of Respondents: 15 (2 forms ea.).

Estimated Time per Respondent: 30 minutes (15 minutes ea. form).

Estimated Total Annual Burden Hours: 7.

Comments: Comments submitted in response to this notice will be summarized and/or included in the request for Office of Management and Budget approval. All comments will become a matter of public record. Comments are invited on: (a) Whether the collection of information is necessary for the proper performance of the functions of the agency, including whether the information shall have practical utility; (b) the accuracy of the agency's estimate of the burden of the collection of information; (c) ways to enhance the quality, utility, and clarity of the information to be collected; (d) ways to minimize the burden of the collection of information on respondents, including through the use of automated collection techniques or other forms of information technology; and (e) estimates of capital or start-up costs and costs of operation, maintenance and purchase of services to provide information.

Dated: May 15, 2012.

Kristine S. Conrath,

Assistant Commissioner, Federal Finance.

[FR Doc. 2012–12151 Filed 5–18–12; 8:45 am]

BILLING CODE 4810–35–M

DEPARTMENT OF VETERANS AFFAIRS

VA National Academic Affiliations Council, Notice of meeting

The Department of Veterans Affairs (VA) gives notice under Public Law 92–463 (Federal Advisory Committee Act) that the second meeting of the National Academic Affiliations Council will be held on June 5–6, 2012, in Suite 878 at 1800 G Street NW., Suite 878, Washington, DC. The sessions will begin at 8 a.m. each day and adjourn at 5 p.m. on June 5 and at 1 p.m. on June 6.

The purpose of the Council is to advise the Secretary on matters affecting partnerships between VA and its academic affiliates.

On June 5, the Council will review the status of recommendations from its inaugural meeting on February 8–9, 2012; receive a briefing on Veteran demographics and Veterans Health Administration's (VHA) strategic planning activities; and discuss opportunities and challenges in academic affiliation relationships identified by the Blue Ribbon Panel on VA-Medical School Affiliations, with an emphasis on the impact of security procedures on health professions trainees. On June 6, the Council will hear from officials of the VHA Office of Research and Development and continue its discussion of opportunities and challenges in academic affiliation relationships identified by the Blue Ribbon Panel on VA-Medical School Affiliations, with an emphasis on research collaboration. The Council will receive public comments from 12:30 to 1 p.m.

Interested persons may attend and present oral statements to the Council. Oral presentations will be limited to 5 minutes or less, depending on the number of participants. A sign-in sheet for those who want to give comments will be available at the meeting. Individuals who speak are invited to submit a 1–2 page summary of their comments at the time of the meeting for inclusion in the official meeting record. Interested parties may also provide written comments for review by the Council to Gloria J. Holland, Ph.D., Special Assistant for Policy and Planning, Office of Academic Affiliations (10A2D), 810 Vermont Avenue NW., Washington, DC 20420, or by email to *Gloria.Holland@va.gov.* Any member of the public wishing to attend or seeking additional information should contact Dr. Holland by email or by phone at (202) 461–9490.

Dated: May 15, 2012.

By Direction of the Secretary.

Vivian Drake,

Committee Management Officer.

[FR Doc. 2012–12183 Filed 5–18–12; 8:45 am]

BILLING CODE P

DEPARTMENT OF VETERANS AFFAIRS

VASRD Status Summit: A Public Overview of Proposed Disability Evaluation Criteria

AGENCY: Department of Veterans Affairs.

ACTION: Notice of Meeting.

SUMMARY: The Veterans Benefits Administration (VBA) will host the Department of Veterans Affairs (VA) Schedule for Rating Disabilities (VASRD) Status Summit: A Public Overview of Proposed Disability Evaluation Criteria. The purpose of the VASRD Status Summit is to capture public comments on working drafts of proposed regulations for nine body

systems and promote transparency by providing the proposed contents of those working drafts to the public. VA has previously hosted VASRD Forums, where subject matter experts and members of the public provided their input, prior to the drafting of proposed regulations for the body systems. VA plans to use comments provided at and following this Summit to consider edits and review updates pertaining to the following nine body systems: (1) The Hemic and Lymphatic Systems (38 CFR 4.117), (2) The Endocrine System (38 CFR 4.119), (3) Mental Disorders (38 CFR 4.125–4.130), (4) Infectious Diseases, Immune Disorders and Nutritional Deficiencies (38 CFR 4.88–4.89), (5) The Musculoskeletal System (38 CFR 4.40–4.73), (6) The Digestive System (38 CFR 4.110–4.114), (7) The Genitourinary System (38 CFR 4.115–4.115b), (8) Dental and Oral Conditions (38 CFR 4.149–4.150), and a newly proposed body system, Rheumatic Diseases. Specifically, working drafts containing proposed revisions to diagnostic code descriptors and evaluation criteria will be available for public review and comment.

DATES: The Summit will take place June 4–8 and 11–13, 2012, from 8:30 a.m. to 4:30 p.m. each day. Plenary sessions on June 4–6, 2012 will cover a summary overview of changes to all nine body systems. The sessions on June 7 and 8, and 11–13, 2012, copies of the working drafts of all nine body systems will be available for individual review by members of the public.

ADDRESSES: All Summit sessions will be held at the Hilton Garden Inn, located at 1333 N. Courthouse Rd. Arlington, VA 22201.

Public Comment: Contingent upon available time, individuals wishing to make oral statements or ask questions during the June 4–June 6, 2012 sessions will be accommodated on a first-come, first-served basis. On June 7 and 8, and 11–13, 2012, copies of the working drafts of all nine body systems will be available for individual members of the public to review. VA will accept written comments regarding these working drafts at the site of the Summit via a comments box, as well as via email at *VSScomments.VBACO@va.gov* or through regular mail. Comments must be received by VA on or before July 13, 2012. Written comments submitted through regular mail may be sent to Director, Regulations Management (02REG), Department of Veterans Affairs, 810 Vermont Ave. NW., Room 1068, Washington, DC 20420.

FOR FURTHER INFORMATION CONTACT: Thomas Kniffen, Chief, Regulation Staff, Compensation Service, Department of Veterans Affairs, 810 Vermont Ave. NW., Washington, DC 20420. Anyone wishing to attend these meetings or seeking additional information may also contact Thomas Kniffen at (202) 461–9700 or *Thomas.Kniffen@va.gov*.

Dated: May 16, 2012.

John R. Gingrich,

Chief of Staff, Department of Veterans Affairs.

[FR Doc. 2012–12285 Filed 5–18–12; 8:45 am]

BILLING CODE 8320–01–P

FEDERAL REGISTER

Vol. 77 Monday,

No. 98 May 21, 2012

Part II

Department of Transportation

Federal Aviation Administration
14 CFR Parts 43, 91 and 145
Repair Stations; Proposed Rule

DEPARTMENT OF TRANSPORTATION

Federal Aviation Administration

14 CFR Parts 43, 91 and 145

[Docket No. FAA–2006–26408; Notice No. 12–03]

RIN 2120–AJ61

Repair Stations

AGENCY: Federal Aviation Administration (FAA), DOT.

ACTION: Notice of proposed rulemaking (NPRM).

SUMMARY: This action would amend the regulations for repair stations by revising the system of ratings, the repair station certification requirements, and the regulations on repair stations providing maintenance for air carriers. This action is necessary because many portions of the existing repair station regulations do not reflect current repair station aircraft maintenance and business practices, or advances in aircraft technology. These changes would modernize the regulations to keep pace with current industry standards and practices.

DATES: Send your comments on or before August 20, 2012.

ADDRESSES: You may send comments identified by Docket Number FAA–2006–26408 using any of the following methods:

- *Federal eRulemaking Portal:* Go to *http://www.regulations.gov* and follow the online instructions for sending your comments electronically.
- *Mail:* Send comments to Docket Operations, M–30; U.S. Department of Transportation, 1200 New Jersey Avenue SE., Room W12–140, West Building Ground Floor, Washington, DC 20590–0001.
- *Hand Delivery or Courier:* Take comments to Docket Operations in Room W12–140 of the West Building Ground Floor at 1200 New Jersey Avenue SE., Washington, DC, between 9 a.m. and 5 p.m., Monday through Friday, except Federal holidays.
- *Fax:* Fax comments to Docket Operations at 202–493–2251.

Privacy: The FAA will post all comments it receives, without change, to *http://www.regulations.gov,* including any personal information the commenter provides. Using the search function of the docket Web site, anyone can find and read the electronic form of all comments received into any FAA dockets, including the name of the individual sending the comment (or signing the comment for an association, business, labor union, etc.). DOT's complete Privacy Act Statement can be found in the **Federal Register** published on April 11, 2000 (65 FR 19477–19478), as well as at *http://DocketsInfo.dot.gov.*

Docket: Background documents or comments received may be read at *http://www.regulations.gov* at any time. Follow the online instructions for accessing the docket or go to the Docket Operations in Room W12–140 of the West Building Ground Floor at 1200 New Jersey Avenue SE., Washington, DC, between 9 a.m. and 5 p.m., Monday through Friday, except Federal holidays.

FOR FURTHER INFORMATION CONTACT: For technical questions concerning this proposed rule contact John Goodwin, FAA, Repair Station Branch (AFS–340), 800 Independence Avenue SW., Washington, DC 20591; telephone (202) 385–6417; facsimile (202) 385–6474; email *John.J.Goodwin@faa.gov.* For legal questions concerning this proposed rule contact Edmund Averman, FAA, Office of the Chief Counsel (AGC–210), 800 Independence Avenue SW., Washington, DC 20591; telephone (202) 267–3147; facsimile (202) 267–5106; email *Ed.Averman@faa.gov.*

SUPPLEMENTARY INFORMATION: Later in this preamble under the Additional Information section, we discuss how you can comment on this proposal and how we will handle your comments. Included in this discussion is related information about the docket, privacy, and the handling of proprietary or confidential business information. We also discuss how you can get a copy of related rulemaking documents.

Authority for This Rulemaking

The FAA's authority to issue rules regarding aviation safety is found in Title 49 of the United States Code. Subtitle I, section 106, describes the authority of the FAA Administrator. Subtitle VII, Aviation Programs, describes in more detail the scope of the agency's authority.

This rulemaking is promulgated under the authority described in title 49, subtitle VII, part A, subpart III, section 44701, General requirements, and Section 44707, Examining and rating air agencies. Under section 44701, the FAA may prescribe regulations and standards in the interest of safety for inspecting, servicing, and overhauling aircraft, aircraft engines, propellers, and appliances. It may also prescribe equipment and facilities for, and the timing and manner of, inspecting, servicing, and overhauling these items. Under section 44707, the FAA may examine and rate repair stations.

This regulation is within the scope of section 44701 since it establishes new regulations for a repair station to have permanent housing for all its facilities, equipment, materials, and personnel. This regulation is within the scope of section 44707 since it revises the system of ratings for repair stations and specifies those instances when the FAA may deny the issuance of a repair station certificate, especially when a previously held certificate has been revoked.

I. Background

In 1989, the FAA held four public meetings to provide a forum for the public to comment on possible revisions to the rules governing repair stations. After considering the comments and data collected from these meetings, the FAA published a notice of proposed rulemaking in June 1999 (1999 NPRM).[1] The 1999 NPRM proposed significant changes to part 145 because the existing language was no longer appropriate and had become increasingly difficult to administer.

In August 2001, the FAA published a final rule with request for comments and direct final rule with request for comments; final rule.[2] This final rule revised most of part 145 as proposed in the 1999 NPRM. However, it did not adopt the proposed revised repair station ratings and the quality assurance system due to the volume of negative comments received on the FAA's proposed changes to these areas.

On October 19, 2001, the FAA tasked the Aviation Rulemaking Advisory Committee (ARAC) to address ratings and quality assurance for repair stations.[3] ARAC provided its recommendations in May 2002.[4]

On December 1, 2006, the FAA published the NPRM titled ''Repair Stations'' (2006 NPRM) that addressed ARAC's recommendations.[5] The original comment period was scheduled to close on March 1, 2007. However, the FAA received a request from the Aeronautical Repair Station Association to extend the comment period. In a notice published on February 27, 2007, the FAA granted a 45-day comment period extension to April 16, 2007.[6] The 2006 NPRM proposed the following changes to part 145:

- The system of ratings and classes would be revised significantly, including the creation of an avionics rating and the end of the issuance of

[1] 64 FR 33142; June 21, 1999.

[2] 66 FR 41088; August 6, 2001.

[3] 66 FR 53281; October 19, 2001.

[4] A copy of the ARAC's recommendations can be found at *http://www.faa.gov/regulations_policies/rulemaking/committees/arac/.*

[5] 71 FR 70254; December 1, 2006.

[6] 72 FR 8641; February 27, 2007.

limited ratings (to be replaced by the issuance of limitations to the rating a repair station holds).

- Each repair station would set up and maintain a capability list of all articles for which it is rated. The list would identify each article by manufacturer and the type, make, model, category, or other nomenclature designated by the article's manufacturer. A repair station with an avionics or a component rating would also be required to organize its lists by category of the article.
- Each repair station would set up a quality system that includes an internal evaluation that reviews the complete repair station yearly.
- Applicants for a repair station certificate would include a letter of compliance as part of their application.
- Each repair station would be required to provide permanent housing for its facilities, equipment, materials, and personnel.
- Each repair station would be required to designate a chief inspector.
- The FAA would use certification from an authority ''acceptable to the FAA'' as a basis for issuing a certificate to a person located outside the United States.
- The FAA would identify reasons it could use to deny the issuance of a repair station certificate.

The FAA received more than 150 public comment submissions to the 2006 NPRM. While there was general support for revising the repair station rules, several commenters asked the FAA to withdraw the proposal. Many other commenters expressed concerns related to the proposed ratings system (particularly the proposed avionics rating), the capability list, quality system, letter of compliance, chief inspector, housing and facilities, and the FAA's denial of a repair station certificate.

On May 7, 2009, the FAA withdrew the 2006 NPRM because it did not adequately address the current repair station operating environment, which had changed significantly since the recommendations developed in 2001 by ARAC.[7] The FAA also noted that the withdrawal would give the FAA time to thoroughly review and properly address these substantial operating environment changes and the many issues raised by the commenters.

The withdrawal notice stated that the FAA had started rulemaking to update and revise the regulations for repair stations to more fully address the significant changes in the repair station business model. This NPRM is the result of those efforts.

General Discussion of the Proposal

There are three major areas that this proposal will address:

- The system of ratings.
- The certification requirements.
- Repair stations providing maintenance for air carriers.

In addition, there are several other areas in part 145 that this NPRM will address. These are discussed in detail in an ''Other Changes'' section in the ''Discussion of the Proposed Regulatory Requirements'' portion of this preamble.

In the 2006 NPRM, the FAA proposed to require a formal quality system for all repair stations. While the FAA continues to believe that all repair stations should have a formal quality system to improve safety, the agency did not include such a requirement in this proposal. The FAA is in the process of introducing Safety Management Systems (SMS) rules, and it is anticipated that a future SMS rule will cover those repair stations operating under part 145. If the agency includes a quality system requirement in the final rule resulting from this proposal, a possibility exists that such systems would have to be modified once an SMS rule is formalized. The FAA does not believe this would be an efficient use of repair station resources based on the unknown differences that may arise.

Total Benefits and Costs of This Rule

The total costs of this proposal would be relatively small ($14.493 million over a 10-year period, spread amongst approximately 5,000 repair stations), but it is difficult to quantify the benefits. We believe, however, that the potential benefits, which derive in part from (1) Giving the FAA authority to (a) deny a repair station certificate to an applicant whose past performance resulted in a revocation, and (b) revoke all FAA-issued certificates of any person who makes fraudulent or intentionally false entries or records; (2) defining what operations specifications consist of and providing a well-defined process for both industry and the FAA to amend them; and (3) updating the ratings system, justify the costs of the proposed rule.

The current rule provides that, with certain unrelated restrictions, an applicant who meets the requirements of the rule is entitled to a repair station certificate regardless of a past regulatory non-compliance history. Because of at least one incident where the FAA revoked a repair station certificate for serious maintenance-related safety violations, and a key management official from that repair station shortly thereafter obtained a new repair station certificate under which improper maintenance resulted in a fatal accident, the National Transportation Safety Board (NTSB) recommended that a certificate applicant's past performance should be a consideration in determining whether a new certificate should be issued. That criteria currently applies to air carrier certificate applicants. The FAA agrees with the NTSB, and is proposing rules similar to those for air carriers in the hopes of preventing accidents like the one just described.

Although the current rule provides that no person may operate without, or in violation of, FAA-issued operations specifications, it does not define the term or explain what they consist of. Much confusion prevails within the repair station community and the FAA whether any or all of a repair station's operations specifications are considered part of its certificate and therefore entitled to NTSB review of any FAA-mandated changes to them. This proposed rule would make clear what operations specifications are and which ones are part of a repair station's certificate. It would also provide detailed processes for both FAA-initiated and repair station-initiated amendments to them. This would benefit both the repair station community and the FAA by providing a degree of certainty where currently there is only confusion.

In addition, the current ratings system dates to the 1930's and 1940's, and does not adequately address the way current aircraft are constructed. This hampers the FAA's ability to appropriately and consistently issue ratings, and it impedes repair stations' ability to accurately describe the work they perform. The repair station community and the FAA have struggled, and continue to struggle, with the application of current technology and business practices to an antiquated rule. The proposed rule would accommodate current advanced technologies and provide regulatory flexibility to accommodate future technological development.

1. System of Ratings

Part 145's system of ratings does not address current technology or industry practices. It is not dynamic and cannot adapt as new technologies are introduced. It is also not defined clearly and is open to inconsistent interpretation and application. These failings have resulted in repair stations having a variety of ratings to perform the same work. This system is confusing

[7] 74 FR 21287, May 7, 2009.

to repair station operators and their customers, and presents increasingly difficult certificate management challenges to the FAA.

The rating changes proposed in the 2006 NPRM generated many comments. Most of those commenters were concerned that the proposed system of ratings would require a repair station to get FAA approval before changing or adding to the proposed required capability list. This proposal would not require a capability list, but would revise the capability list recording requirements for those repair stations who choose to use one. This is a potentially marked change for repair stations with class ratings that do not currently have a capability list of the items they maintain.

Under this proposal, the system of ratings would be reduced from eight ratings to five ratings. The ratings definitions would be revised to clearly indicate the type of work that a repair station is authorized to perform. A comparison of the proposed ratings with the current ratings follows:

Current	Proposed
Airframe Class: 1. Composite Small. 2. Composite Large. 3. All-Metal Small. 4. All-Metal Large.	Airframe Category: 1. Aircraft certificated under part 23 or 27. 2. Aircraft certificated under part 25 or 29. 3. All other aircraft.
Powerplant Class: 1. Reciprocating Engines of 400 HP or less. 2. Reciprocating Engines of more than 400 HP. 3. Turbine Engines.	Powerplant Category: 1. Reciprocating engines. 2. Turbine engines. 3. Auxiliary Power Units. 4. All other powerplants.
Propeller Class: 1. All Fixed and Ground-Adjustable. 2. All other propellers.	Propeller Category: 1. Fixed-pitch and ground-adjustable propellers. 2. Variable-pitch propellers. 3. All other propellers.
Radio Class: 1. Communication. 2. Navigation. 3. Radar.	Component.
Instrument Class: 1. Mechanical. 2. Electrical. 3. Gyroscopic. 4. Electronic.	Component.
Accessory Class: 1. Mechanical. 2. Electrical. 3. Electronic.	Component.
Limited Rating Specialized Service.	Specialized Service.
Limited Ratings (§ 145.61(b) lists 12 possible limited ratings).	Eliminated.

2. Certification Requirements

The 2006 NPRM proposed that the FAA could deny an application for a repair station certificate if the applicant previously held a repair station certificate that had been revoked or if the applicant or certain key individuals who would exercise control over the new repair station had materially contributed to the circumstances that resulted in a prior repair station certificate revocation action. This proposal was similar to the authority contained in part 119 authorizing the FAA to deny applications for air carrier and commercial operator certificates. The commenters who opposed this proposal stated it was too open-ended and that it would be impossible to maintain a tracking list of disqualifying individuals.

While the FAA understands the commenters' concerns, the agency believes this requirement should be implemented. The FAA will add a question to the repair station application asking whether the applicant has a repair station certificate currently being revoked, or previously held a repair station certificate that was revoked as described in § 145.1051(e). The FAA notes that denial is not automatic. If the agency were to deny a certificate to an applicant under the proposed rule, the affected person could appeal that denial under the procedures provided in 14 CFR part 13.

The FAA is also proposing to clarify the certification requirements in § 145.51(b) on the equipment, personnel, technical data, and housing and facilities that must be in place for inspection at the time of certification or rating approval by the FAA. There has been much confusion about how a repair station can meet these requirements by contract. The FAA is proposing language to clarify that the contract applies only to ownership, and not to the demonstration phase of certification. If a repair station does not permanently possess these items, it must be able to demonstrate to the FAA that it has made arrangements with another person to provide such items whenever they are needed to perform work, and it must display these items and all associated lease agreements during certification.

3. Repair Stations Providing Maintenance for Air Carriers

In response to the 2006 NPRM, several repair stations that provide maintenance for air carriers raised concerns on the information that air carriers must provide. Currently, § 145.205 states a repair station working for an air carrier must follow the carrier's ''program and applicable sections of its maintenance manual.'' Repair stations that provide such work stated that the term ''applicable sections'' causes confusion because it is subjective and vague. They point out that air carriers, air operators, and even the FAA's own inspectors interpret this term differently.

In this NPRM, the FAA proposes language to clarify that when a repair station performs work as a maintenance provider to an air carrier, the repair station must perform that work in accordance with the maintenance instructions provided by the air carrier or air operator.

Line maintenance will be authorized as a limitation to an airframe rating. The regulations regarding line maintenance authorization will be deleted.

II. Discussion of the Proposed Regulatory Requirements

1. Transition

The FAA recognizes that the proposals in this NPRM represent a major revision to part 145. There would be many new and enhanced requirements as well as an in-depth change to the ratings system. These changes would require the revision of several existing repair station documents. These document changes would have to be reviewed and accepted by the FAA. This could then lead to delays in granting repair stations the approvals they need to operate.

To provide for the transition of current repair stations and at the same time accommodate the continued receipt of new applications, the FAA is proposing to retain the current regulations appended with the proposed regulations for 24 months. The current language would be retained with its current subpart lettering, A through E, and be revised only where necessary to accommodate the transition. The new rule would be located in new subparts, lettered F through J. Thus, the current Subpart B Certification § 145.51, Application for Certificate, would co-exist with a Subpart G Certification § 145.1051, Application for Certificate, during the 24-month transition period. The FAA anticipates that the final rule, if adopted, would become effective 60 days after publication.

Repair stations certificated before the effective date of the final rule would be able to continue to operate under the current regulations. They would have 24 months after the effective date of the final rule to show compliance with the proposed regulations by developing associated documents and submitting an FAA Form 8310–3, Application for Repair Station Certificate and/or Rating.

New applicants would be required to comply with subparts F through J upon the effective date of the final rule. Any repair station applying for a change to its repair station certificate requiring a new application, as provided for in the current rule, would be required to comply with subparts F through J as a condition of approval of the certificate change.

All repair stations certificated before the effective date of the final rule would have to timely apply for certification under the proposed rules if they intend to continue to operate without interruption. Repair stations are cautioned that waiting until later in the 24-month transition period may increase the risk that unforeseen circumstances might result in the repair station not having an active certificate until such time as the FAA can review the submitted documents and provide the repair station with a new repair station certificate.

All certificated repair stations would have to be in compliance with the provisions of subparts F through J no later than 24 months after the effective date of the rule. At that time, current subparts A through E would be removed and reserved. The rules would continue to carry the 1xxx (one thousand series) numbers to be consistent with any guidance or other documentation that is issued during the 24-month transition period.

To address the transition in the current regulations, the FAA proposes to revise subparts A through C as follows:

- Section 145.1(a) would state that subparts A through E will expire and be reserved 24 months after the effective date of the final rule.
- Section 145.1(b) would be changed to direct that subparts A through E apply to repair stations certificated before the effective date of the final rule until they are certificated under new subparts F through J or 24 months from the effective date of the rule.
- Section 145.1(c) would be revised to direct that a repair station certificated before the effective date of the rule would have to follow subparts A through E until it complies with subparts F through J.
- Section 145.51(a) would be changed to direct applications to be made in accordance with new § 145.1051.
- Section 145.53(a) would be revised to reflect that a certificate issued under subparts A through E would be valid for no longer than 24 months after the effective date of the final rule.
- Section 145.55(a) would be revised to state that a certificate issued to a repair station located outside the United States would not be valid 24 months after the effective date of the final rule.
- Section 145.55(b) would be revised to state that a certificate issued to a repair station located outside the United States may be renewed but not beyond 24 months from the effective date of the final rule.
- In § 145.55(c)(1), the reference to § 145.51 for the application procedures would be changed to § 145.1051.
- In § 145.57, the reference to § 145.51 for the procedures to be followed by a new owner would be changed to § 145.1051.
- In § 145.105(b), the reference to § 145.103 for change in housing would be changed to § 145.1103.

2. System of Ratings

The FAA proposes to revise the ratings and classes that may be issued to certificated repair stations. Under this proposal, the system of ratings would be reduced from eight ratings to five ratings. The ratings definitions would be revised to clearly indicate the type of work that a repair station is authorized to perform under each rating.

a. Airframe Rating (Current § 145.59(a)/ Proposed § 145.1059(a))

Currently, the FAA may issue a repair station an Airframe rating with any of four class ratings: Classes 1, 2, 3, and 4. These classes are based on aircraft weight (large or small (as defined in 14 CFR 1.1)) and construction (composite or all-metal).

The use of construction as a basis for determining the class rating system no longer reflects the technology used in building today's aircraft. For example, at the time the Airframe rating was created, the aviation industry commonly referred to aircraft made from a combination of wood, fabric, and metal materials as aircraft with a ''composite'' construction. Today, the term ''composite'' construction refers to the use of carbon-carbon compounds and advanced polymers (which is fast becoming the standard in the industry). These types of materials were not even envisioned when the Airframe rating was created.

In addition, airframe manufacturers often use a mix of materials in current

aircraft construction. An all-composite or all-metal construction of an airframe is no longer the standard design. For example, an airframe could be metal while certain portions, such as control surfaces and fairings, are composite materials.

The continued use of weight as a basis for determining the class rating is also problematic. Historically, the FAA and the aviation industry used the weight classification of small and large aircraft to distinguish aircraft used in commercial air carrier service from those used in general aviation. Commercial operators typically used aircraft weighing over 12,500 pounds, while general aviation operators typically used smaller aircraft. This distinction also reflected the relative complexity of the aircraft. Today, however, aircraft weight reflects neither the complexity nor the intended use of an aircraft.

Therefore, it is clear that the Airframe rating needs to be updated. The FAA initially considered trying to define the term ''composite.'' This was difficult, at best. More importantly, any definition developed today may soon become outdated by further technological advances. The FAA has determined that a better approach is to have the underlying certification rules dictate the appropriate rating.

The FAA proposes to remove classes from the Airframe rating and group the aircraft that were previously covered by these classes in accordance with their certification standards under parts 23, 25, 27, and 29. All other aircraft not certificated under these parts would be in a separate category ''all other aircraft.''

The FAA believes that grouping the Airframe rating into categories according to the airworthiness certification standards would better define the technology of the aircraft and relieve confusion. The proposed structure of the Airframe rating is:

- Category 1: All aircraft certificated under parts 23 and 27.
- Category 2: All aircraft certificated under parts 25 and 29.
- Category 3: All other aircraft.

The purpose of grouping airframes into categories 1 and 2 is to include aircraft that were originally certificated under their respective airworthiness standards. The third category would capture aircraft that were originally certificated under Civil Aeronautical Rules (CARs), Civil Aeronautical Bulletins (CABs) and/or Special Aeronautical Information Bulletins (SAIBs). This system of airframe rating categories would also capture future aircraft designs.

Category 3 would capture aircraft that are not included in categories 1 and 2. This would include aircraft such as unmanned aircraft systems, light sport aircraft, and manned balloons. This would also provide a category for other aircraft currently under design status and not yet certified under established certification regulations.

An application for the proposed Airframe rating would have to include a list of the make, model, or series of all aircraft that the repair station intends to maintain. This is a marked change for current airframe class rated repair stations.

The FAA also proposes to use the term ''category'' as a replacement for the term ''class.'' The term ''class'' has been used for so many years to mean a particular group of aircraft in part 145 that it seems impractical to try to apply it in a different context.

b. Powerplant Rating (Current § 145.59(b)/Proposed § 145.1059(b))

The current Powerplant rating has three classes: Class 1—Reciprocating engines of 400 horsepower or less, Class 2—Reciprocating engines of more than 400 horsepower, and Class 3—Turbine engines.

When the FAA established the current Powerplant rating, reciprocating radial engines that produced more than 400 horsepower powered nearly all large aircraft. These engines differed substantially from the horizontally-opposed reciprocating engines with less than 400 horsepower that manufacturers used to power general aviation aircraft. In 1941 (which was when the repair station ratings were originally developed), horsepower evaluations were the most common of the methods available to determine the complexity of engines.

Today, this methodology is antiquated and adds no value to the Powerplant rating. It is possible for small horizontally-opposed reciprocating engines to produce more than 400 horsepower. Further, most modern transport category aircraft now have turbine engines, while manufacturers no longer produce high horsepower radial engines. This is the exact opposite of what was in place when the FAA established the current Powerplant rating (i.e., manufacturers were just beginning to use turbine engines on civil aircraft). Therefore, separate classes for reciprocating engines are no longer useful.

Under the proposed Powerplant rating, the FAA intends to establish four categories:

- Category 1: Reciprocating engine.
- Category 2: Turbine engine.
- Category 3: Auxiliary Power Units (APU).
- Category 4: All other powerplants.

Reciprocating engines would be grouped into one category regardless of the horsepower generated. Turbine engines would continue to be grouped into one category. Since reciprocating and turbine engines do not cross technological boundaries, the FAA believes the two categories sufficiently capture the types of engine work that a repair station may perform.

A new category for APUs is proposed because they have evolved into a specialized technology in the powerplant arena. An APU refers to any gas turbine-powered unit delivering rotating shaft power or compressed air, or both, that is not intended for propelling aircraft. APUs often drive aircraft generators and air-conditioning packs. APUs also can be used as an extra source of energy to start the primary aircraft engines. The design configurations of some aircraft rely on an APU for provisional back-up electrical power in flight if the primary power sources fail.

The fourth category, All other powerplants, would be created to allow growth within the Powerplant rating for any other powerplant units not commonly used in aircraft today, such as solely electric engines.

Under the proposed rating system, a repair station holding a new Powerplant rating could perform maintenance, preventive maintenance, and alterations of the powerplant and associated articles that are necessary for the powerplant to operate properly.

An application for the proposed Powerplant rating would have to include a list of the make, model, or series of all aircraft engines and APUs that the repair station intends to maintain. This is a marked change for current powerplant class rated repair stations.

As was the case with the proposed Airframe rating, the FAA is proposing to use the term ''category'' as a replacement for the term ''class.''

c. Propeller Rating (Current § 145.59(c)/Proposed § 145.1059(c))

Under the current regulations, the Propeller rating has two classes. Class 1 covers fixed-pitch and ground-adjustable propellers of wood, metal, or composite construction. All other propellers, by make, fall under Class 2.

This distinction is based on the different levels of complexity between a propeller with no moving parts and a propeller with a mechanical system that controls the pitch of the propeller while operating. Aircraft with small

reciprocating engines generally have fixed-pitch propellers, while aircraft with high horsepower engines have variable-pitch propellers. Although varying levels of complexity exist for propellers, most repair stations performing maintenance on propellers hold both class ratings.

As was the case with the current Airframe rating, the use of a propeller's composition as a basis to classify propellers has lost its usefulness.

The proposed Propeller rating would be structured to categorize propellers by complexity of designs and would no longer refer to the composition of a propeller as a method of categorization. The proposed structure of the Propeller rating is:

- Category 1: Fixed-pitch and ground-adjustable propellers.
- Category 2: Variable-pitch propellers.
- Category 3: All other propellers.

The proposed Propeller rating would permit a repair station to perform maintenance, preventive maintenance, and alterations on propellers and their respective individual component parts that are necessary for the propellers to operate. Examples of these propeller component parts would be propeller blade pitch controls, governors, pitch change assemblies, pitch locks, mechanical stops, and feathering system components. The proposed Propeller rating does not include main and auxiliary rotors (Airframe rating required) or rotating airfoils of aircraft engines (Powerplant rating required).

An application for the proposed Propeller rating would have to include a list of the make, model, or series of all propellers that the repair station intends to maintain.

As was the case with the proposed Airframe and Powerplant ratings, the FAA is proposing to use the term ''category'' as a replacement for the term ''class.''

d. Component Rating (Proposed § 145.1059(d))

The current Radio rating (§ 145.59(d)) consists of three classes: Class 1—Communication equipment, Class 2—Navigation equipment, and Class 3—Radar equipment. In its report, ARAC indicated that technological advances in avionics have led to much controversy over this categorization of equipment. ARAC noted that modern avionics equipment typically integrates communication and navigation functions into a single avionics appliance. Radar and radio equipment that operate using pulse technology also serve communication and navigation functions. As such, repair stations performing work on avionics equipment often hold a Radio rating with all three of the classes.

The current Instrument rating (§ 145.59(e)) consists of four classes: Class 1—Mechanical, Class 2—Electrical, Class 3—Gyroscopic, and Class 4—Electronic. These classes were established based on the technology available at the time. However, most instruments currently operate using a combination of these technologies. These class distinctions are no longer appropriate.

The current Accessory rating (current § 145.59(f)) has three classes. Class 1 is mechanical accessories that depend on friction, hydraulics, mechanical linkage, or pneumatic pressure for operation. Class 2 is electrical accessories that depend on electrical energy for their operation and generators. Class 3 is electronic accessories that depend on the use of an electron tube, transistor, or similar device. Similar to the Instrument rating, the classes for the Accessory rating identify the article's principle of operation. Many articles maintained under this rating use a combination of principles, thus requiring repair stations to hold all the class ratings for an Accessory rating.

The classes defined in §§ 145.59(d), (e), and (f) are essentially the same as when they were implemented in 1941. The technological advances in radios, instruments, and accessories have often combined many of the functions and modernized the construction of the articles detailed in these classes. Under oo current rule, repair stations may not be able to categorize properly the articles on which they desire to perform maintenance. Therefore, repair stations may be required to possess tools and equipment that are either antiquated or not available.

The FAA is proposing a new Component rating to replace the Radio, Instrument, and Accessory ratings. The proposed Component rating would allow repair stations to perform maintenance, preventive maintenance, and alterations on various components and related articles that are not installed on an airframe, powerplant, or propeller. The various components and articles that are currently included in a Radio, Instrument, or Accessory class rating would be absorbed into the Component rating. A repair station with a Component rating would be required to have an Airframe, Powerplant, or Propeller rating with limitations to install components or appliances. The FAA believes that the comments generated in previous rulemaking attempts are being addressed by this proposed rating. The Component rating would open opportunities for repair stations to have numerous components listed on their operations specifications, thus generating more work and revenue.

An application for the proposed Component rating would have to include a list of the components that the repair station intends to maintain.

e. Specialized Service Rating (Proposed § 145.1059(e))

The FAA is proposing a new rating, called Specialized Service, to address what is currently listed as specialized services functions of a limited rating. This rating would be different from the other ratings in that it focuses on the maintenance being performed rather than the article being maintained. A repair station with a Specialized Service rating could perform a specialized maintenance function that might apply across multiple other ratings.

The proposed Specialized Service rating is substantially the same as the existing limited rating for specialized services in § 145.61. The Specialized Service rating would allow a repair station to perform a specific and unique function associated with the maintenance, preventive maintenance, or alteration of an article. The repair station's operations specifications would list the Specialized Service rating and the specification used in performing that specialized service. The specification could be a military, industry, or applicant-developed specification that was approved by the FAA. Examples of specialized services would include, but not be limited to, non-destructive testing or inspection, welding, heat-treating, plating, and plasma spraying.

If specialized service functions are contained within a repair station's existing ratings, the repair station would not require an additional rating to perform that service. For example, if an Airframe rated repair station has the in-house capability to perform x-ray inspections in accordance with the airframe Instructions for Continued Airworthiness, it would not need to have a Specialized Service rating to perform that function on an airframe for which it is already rated.

As is the case with the current limited specialized service rating, this rating could enhance the capabilities of some repair stations that are limited by the article-based rating they possess. This individual rating would allow a repair station to perform the maintenance function outside of its article-based rating—to specialize in a particular maintenance function without being required to hold an Airframe,

Powerplant, Propeller, or Component rating to perform the service.

An application for the proposed Specialized Service rating would have to include a list of the services, with associated specifications, that the repair station intends to provide.

f. Limitations to Ratings (Current § 145.61/Proposed § 145.1061)

Section 145.61 provides for limited ratings based on a repair station performing maintenance, preventive maintenance, or alterations on a particular make or model of aircraft, powerplant, propeller, radio, instrument, accessory, or part thereof, and for performing specialized maintenance.

The FAA is proposing that limited ratings no longer be issued. Proposed § 145.1061 would more accurately detail the FAA's current practice of issuing limitations to the rating of a certificated repair station. For example, if a repair station intends to perform only interior configuration work or aircraft painting, the FAA would issue the repair station a limitation to its Airframe rating and list that limitation on the repair station's operations specifications. The repair station's operations specifications would specify the rating to which the limitation applies in sufficient detail to describe the maintenance capabilities of the repair station.

The FAA believes that the ability to place limitations when necessary on a repair station's rating is essential to accurately reflect the repair station's capabilities. Currently, a repair station's operations specifications contain provisions for this purpose. This proposed change would add regulatory language to control what has historically been an essential part of the rating system.

3. Certification Requirements

Several areas within subpart B (Certification) of part 145 have, over time, caused confusion in the industry and within the FAA. Changes within this subpart are needed to clarify existing regulatory language and, in some cases, create regulatory language where essential practices have long been imposed through FAA guidance. Changes are also needed in this subpart to align language with other proposed section changes contained in this NPRM. In addition, this NPRM contains a proposal to allow for certification denial when certain enforcement history exists.

a. Application for Certificate—Items Required (Current § 145.51(a)/Proposed § 145.1051(a))

Current § 145.51(a) details, and § 145.1051(a) proposes to detail, those items that must be included in an application for a repair station certificate and rating.

The FAA proposes to add a provision that would require an initial applicant for a repair station certificate to provide the FAA with a letter outlining how the applicant will comply with each section of part 145 (see proposed § 145.1051(a)). The FAA refers to this as a ''letter of compliance.'' Under longstanding FAA policy and practice, applicants have provided this letter in the past. Since this letter has long been an essential part of the application process, the FAA believes it appropriate to propose a regulatory basis for it. Also, because applicants have been providing these letters by policy, the FAA believes no additional cost would be incurred.

Current § 145.51(a)(1) requires that an application for a repair station certificate include a repair station manual acceptable to the FAA as required by current § 145.207, and § 145.51(a)(2) requires that the application include a quality control manual acceptable to the FAA as required by current § 145.211(c). These requirements are found in proposed §§ 145.1051(a)(2) and (a)(3), respectively. The FAA is also proposing in § 145.1051(a)(3) that the repair station manual and the quality control manual may be contained in the same document if they are clearly identified.

Currently, an applicant is required to provide a list by type, make, or model of each article for which the application is made (§ 145.51(a)(3)). This requirement is not explicitly linked to the rating system found in § 145.59. The FAA proposes to revise this requirement (in proposed § 145.1051(a)(4)) to specifically reference the rating system (as found in proposed § 145.1059). This would help the applicant better understand the certification requirements and align the information provided at the time of application with the actual ratings allowed through the regulation. The FAA does not anticipate that this change would burden current repair stations, and it would ensure that applicants submit the necessary information without adding new requirements.

As repair stations have become larger and more complex, it is apparent that identification of the principal repair station location has often become difficult to ascertain for the public as well as for the FAA. This has made it difficult for the FAA to fulfill its obligation to provide appropriate oversight. Current § 145.51(a)(5) requires an applicant to provide a description of its housing and facilities, in accordance with § 145.103. The FAA is proposing clarifying language in § 145.1051(a)(6) that would require the applicant to identify all facilities that will make up the repair station at the time of application.

The FAA is not proposing changes to the requirements in current §§ 145.51(a)(4), (6) and (7). However, in proposed subpart G, these requirements would be found in proposed as §§ 145.1051(a)(5), (7) and (8) respectively.

b. Application for Certificate—Appropriate Equipment (Current § 145.51(b)/Proposed § 145.1051(b))

Current § 145.51(b) requires that the equipment, personnel, technical data, and housing and facilities required for the certificate and rating, or for an additional rating, must be in place for inspection at the time of certification or rating approval by the FAA. This section also states that an applicant may meet the equipment requirement if it has a contract acceptable to the FAA with another person to make the equipment available to the applicant at the time of certification and at any time it is necessary when the relevant work is being performed by the repair station.

This provision was included for the first time in the 2001 final rule in response to comments received on the 1999 NPRM. The commenters expressed concerns that the requirement to have all the equipment in place at the time of certification would be unnecessarily burdensome. Others noted that it is important only that the equipment be in place when it is needed to perform the work. Similarly, commenters opposed the requirement in then proposed § 145.111 (Equipment and material requirements) that would have required repair stations to have, located on the premises and under their full control, the equipment and material necessary to perform the maintenance appropriate to their ratings. They said the requirement would preclude repair stations from renting or leasing equipment. The commenters also noted that a renting or leasing option would be particularly important for expensive, rarely used tools.

In response to those comments, the FAA revised the text in § 145.51(b) to permit an applicant for a repair station certificate to meet the equipment requirement by having a contract acceptable to the FAA that would ensure the equipment would be

available when the relevant work is performed. Agreeing with the commenters' concerns over the burden of having to purchase expensive, rarely used tools to have in place during initial certification, the FAA stated that its new contract provision ''will accommodate those repair stations that do not plan to purchase expensive equipment that may not be used regularly'' (66 FR 41095, August 6, 2001). The preamble discussion, however, noted that the provision did not relieve an applicant from having the equipment in place and available for inspection at the time of certification. While recognizing that, under this provision, an applicant need not physically retain the equipment after certification, the FAA found it necessary that each applicant have the equipment in place during the certification process. During the certification inspection, the FAA could ''observe the placement of the equipment, whether the equipment works, and whether the applicant can use the equipment properly.'' *Id.*

Similarly, in response to the comments on proposed § 145.111, the FAA revised the text (now found in § 145.109) to provide that: ''The equipment, tools, and material must be located on the premises and under the repair station's control when the work is being done.'' This change also accommodated the commenters' concerns about not having to purchase expensive, seldom used equipment to have permanently in place when they could instead obtain it through contract when needed.

These issues were discussed in the 2006 NPRM, when the FAA addressed and attempted to clarify what it termed was an ambiguity in the existing text. The preamble stated that this ''ambiguity results from the phrase specifying that the equipment requirement could be met 'if the applicant has a contract acceptable to the FAA with another person *to make the equipment available* to the applicant at the time of certification' '' (71 FR 70256, Dec. 1, 2006 (emphasis in original)).

The FAA noted the possibility of inconsistent application of this provision by different FAA inspectors. For example, one inspector might require all of the equipment to be placed on site for initial inspection, and another might only review the contract. Noting that the safety basis for the equipment requirement is that the equipment be in place when the work is being performed, the FAA proposed revised text in the 2006 NPRM to clarify that the requirement for initial certification could be met by a contract to make the equipment, tools, and test apparatus available to the repair station at any time it is necessary when the relevant work is being performed.

The FAA has reconsidered this issue and has determined that the ''clarification'' proposed in the 2006 NPRM was not entirely consistent with the underlying purpose of the provision published in the 2001 final rule. As noted above, the 2001 preamble supported the change to allow contracting for equipment availability by noting that it would ''accommodate those repair stations that do not plan to purchase expensive equipment that may not be used regularly.'' The preamble also made clear that the new provision did *not* relieve an applicant from having the equipment in place and available for inspection at the time of certification. Thus, the clarification offered in the 2006 NPRM was not in full accord with the agency's intent set forth in the 2001 preamble, which would have required applicants to have basic equipment in place for inspection.

The FAA believes it should not grant a repair station certificate to an applicant with a virtually empty building based merely on a showing it can get the required equipment by contract when needed. Therefore, the FAA proposes to change the rule to remove any ambiguity by requiring the repair station to meet the equipment requirements of proposed § 145.1051 by having the equipment available for inspection at certification. The repair station would not need to own the equipment but would be required to present the equipment during certification and have it available thereafter.

The FAA also proposes to clarify the scope of the kinds of items a repair station must have for initially obtaining certification by adding both tools and test apparatus to the list of items a repair station must have on site. While the term ''equipment'' could be interpreted to include many examples of each, adding the term ''tools'' to the regulation would ensure that an applicant for a repair station certificate also have on site certain tools necessary for the rating sought that individual mechanics or repairmen might not possess. This might include tools that are of a specialized nature for the rating or other tools that might be too large or expensive, or of a limited specialized nature. For the same reasons, and for consistency with the requirements of § 43.13(a), the FAA proposes to add ''test apparatus'' to the list of items a repair station must have in place for inspection at the time of initial certification or rating approval.

c. Application for Certificate—Repair Stations Outside the United States (Current § 145.51(c)/Proposed § 145.1051(c))

Current § 145.51(c) requires an applicant for a certificate for a repair station located outside the United States to show the certificate and/or rating is necessary for maintaining or altering certain aircraft and articles. The result of this language unintentionally requires the repair station applicant to maintain both aircraft and articles. The FAA proposes to change the word ''and'' to the less restrictive ''or'' in proposed § 145.1051(c).

d. Application for Certificate—Denial (Proposed § 145.1051(e))

The 2006 NPRM proposed that the FAA could deny an application for a repair station certificate if the applicant previously held a repair station certificate that had been revoked or if the applicant or certain key individuals who would exercise control over the new repair station had materially contributed to the circumstances that resulted in a prior repair station certificate revocation action. This is similar to the current authority contained in part 119 authorizing the FAA to deny applications for air carrier and commercial operator certificates. The commenters who opposed this proposal stated it was too open-ended and that it would be impossible to maintain a tracking list of disqualifying individuals.

At the present time, the FAA is not planning to maintain a tracking list of individuals who might be disqualified under this section. The agency is, however, planning to add a question to the repair station application inquiring into the disqualifying criteria set forth in this section, *e.g.,* whether the applicant held a repair station certificate that had been revoked or that is in the process of being revoked. A truthful answer here would be imperative in view of proposed § 145.1012, because an intentionally false answer to the question could result in the suspension or revocation of any FAA-issued certificate held by that applicant.

While the FAA understands the concerns of the commenters, the agency believes this requirement should be implemented to address safety concerns. For example, a chief inspector from a repair station that lost its certificate for serious maintenance-related safety violations applied for and received a new repair station certificate. That individual also became the chief inspector at the newly certificated repair station. While under the chief

inspector's direction, employees of the newly certificated station performed improper maintenance on a number of propellers, one of which came apart in flight causing a fatal accident.[8]

The FAA already has such a mechanism in place for air carriers and commercial operators. Section 119.39(b) allows the FAA to deny an application for a part 121 or 135 air carrier certificate or operating certificate based on prior relevant enforcement action. The FAA can deny certification to an applicant who is substantially owned by (or intends to fill a management position with) an individual who had a similar interest in a certificate holder whose certificate was (or is being) revoked when that individual materially contributed to the circumstances causing the revocation process.

The FAA proposes new language (in § 145.1051(e)) to detail conditions under which a person may be denied a repair station certificate. The changes the FAA propose are based to a large extent on the language contained in § 119.39(b). The FAA's proposal would authorize the agency to deny a repair station application if:

- The applicant previously held a repair station certificate that was revoked.
- The applicant intends to fill or fills a management position with an individual who exercised control over or who held the same or a similar position with a certificate holder whose repair station certificate was revoked, or is in the process of being revoked. That individual must have materially contributed to the circumstances causing the revocation or causing the revocation process.
- An individual who would hold a management position previously held a management position with a certificate holder whose repair station certificate was revoked, or is in the process of being revoked. The individual must have materially contributed to the circumstances causing the revocation or causing the revocation process.
- An individual who would have control over or substantial ownership interest in the applicant had the same or similar control or interest in a certificate holder whose repair station certificate was revoked, or is in the process of being revoked. That individual must have materially contributed to the circumstances causing the revocation or causing the revocation process.

The current regulations (§ 145.55(a)) contemplate the holder of a repair station certificate voluntarily surrendering the certificate to the FAA, in which case it would cease to be effective. This voluntary surrender provision is sometimes abused in an attempt to thwart an ongoing investigation. The FAA is aware that sometimes after an enforcement investigation has commenced, the certificate holder will attempt to surrender the certificate as a means of stopping the enforcement action. It is the FAA's policy, however, not to accept the voluntary surrender of a certificate in those circumstances. The FAA's Compliance and Enforcement Program (FAA Order 2150.3B at Ch 5, Para. 10(b)) instructs FAA investigative personnel to refuse the voluntary surrender of a certificate if it appears the surrender is being attempted to avoid a certificate action. In those cases, the investigative personnel are to continue with the investigation and recommend enforcement action, if appropriate. As discussed in paragraph f (Duration and Renewal of Certificate (current § 145.55/ proposed § 145.1055)) below, the FAA is proposing to amend the text currently in § 145.55 to add a new condition to the certificate surrender provision—that acceptance for cancellation by the FAA of a certificate offered for surrender is necessary to render the certificate no longer effective. This change would highlight and provide additional notice to the holders of repair station certificates of the FAA's policy against potential violators merely surrendering their certificates to avoid enforcement action. Unless the FAA accepted the certificate for surrender, it would remain effective for administrative and enforcement purposes, even if the certificate holder ceased operations. Accordingly, in the event of an enforcement action that might result in the suspension or revocation of a repair station certificate, the enforcement process could continue and, in the case of a revocation, a record would exist to support the certificate denial provisions proposed in this paragraph.

The FAA recognizes that the proposed language does not contain an appeal or reconsideration procedure. This is because a process already exists in current § 13.20, which addresses, among other things, orders of denial. Paragraph (b) of that section provides, in pertinent part, that unless an emergency exists requiring the immediate issuance of an order of denial, the affected person (the applicant) must be provided with notice prior to issuance of an order of denial. Paragraph (c) further provides that, within 30 days after service of the notice, the affected person may reply in writing or request a hearing in accordance with subpart D of part 13. Subpart D of part 13 provides the Rules of Practice for FAA Hearings. Thus, applicants who are denied a repair station certificate would be provided with appropriate due process through the means of an evidentiary hearing.

e. Issue of Certificate (Current § 145.53/ Proposed § 145.1053)

Current § 145.53(a) states that, subject to three exceptions, a person who meets the requirements of part 145 is entitled to a repair station certificate with appropriate ratings prescribing such operations specifications and limitations as are necessary in the interest of safety. Since proposed § 145.1051 would provide a mechanism for the FAA to deny a certificate, an applicant would no longer be ''entitled'' to a certificate.

The FAA is proposing in § 145.1053(a) that an applicant could be found ''eligible to be issued'' a certificate. This proposed change is consistent with other certification requirements, such as in parts 121 and 135, where the FAA has the authority to deny a certificate. In addition, the FAA proposes to remove the three exceptions from this paragraph as they refer to additional requirements for particular applicants, not exceptions to the eligibility requirements.

Section 145.53(b) sets forth the procedure to certify repair stations located in a country with which the United States has a bilateral aviation safety agreement. This procedure is based on the certification from the civil aviation authority of the country that the applicant meets the requirements of part 145.

The FAA must consider that the United States may enter into a bilateral agreement with a civil aviation authority other than a national aviation authority. This situation already exists in Europe. The European Union formed the European Aviation Safety Agency (EASA) to carry out those civil aviation safety functions that were previously the domain of national aviation authorities.

Therefore, the FAA is proposing in § 145.1053(b) to allow the FAA to certify a repair station outside the U.S. based on a certification from an authority acceptable to the FAA. This change would allow the FAA to make the finding based on a recommendation from a national aviation authority, EASA, or any other EASA-like entity that may be created in the future.

[8] As a result of this incident, the NTSB, in a safety recommendation dated February 9, 2004 (A–04–01 and A–04–02), expressed concern that the FAA did not have a mechanism for preventing individuals who were associated with a previously revoked repair station from continuing to operate through a new repair station.

f. Duration and Renewal of Certificate (Current § 145.55/Proposed § 145.1055)

As discussed in paragraph d (Application for Certificate—Denial (proposed § 145.1051(e)) above, the FAA has experienced instances in which a certificate holder surrendered its certificate to the FAA in order to stop an investigation that the holder suspected would lead to an FAA order suspending or revoking the certificate because of known or suspected serious violations of the regulations. In the case of a repair station, the holder of a repair station certificate could attempt to take advantage of the provision in current § 145.55, regarding surrender of the certificate. Upon surrender the certificate would no longer be effective, and there would be no certificate that could be suspended or revoked. This is an abuse of the surrender provision, as it was never intended as a device to stop an investigation and possible enforcement proceeding. In proposed § 145.1055, the FAA would add a new condition to rendering a surrendered certificate ineffective. Under the proposal, a surrendered certificate would remain effective unless the FAA accepted it for cancellation.

As the discussion in paragraph d points out, the FAA's Compliance and Enforcement Program (FAA Order 2150.3B at Ch 5, Para. 10(b)) instructs FAA investigative personnel to refuse the voluntary surrender of a certificate if it appears the surrender is an attempt to avoid a certificate action. The amendment proposed here would provide additional notice to all holders of repair station certificates that successfully surrendering a repair station certificate for cancellation requires not only the offer of surrender, but also the FAA's acceptance of that offer. As we noted above, unless and until the FAA accepts for cancellation a surrendered certificate, the certificate would remain effective for administrative and enforcement purposes, even if the holder ceased operations.

Current § 145.55(c) sets forth what a certificated repair station located outside the United States must provide to renew its certificate. In addition to the items listed in that provision, a certificated repair station located outside the United States must pay a fee for service as a condition for renewal. The requirement to pay this fee as part of the renewal application is not in § 145.55(c) even though it is a requirement found in 14 CFR part 187. The FAA is proposing in § 145.1055(c)(3) that, as a condition of renewal, the fee prescribed by the FAA has been paid.

g. Capability List (Current § 145.215/Proposed § 145.1215)

During the repair station certification process, an applicant's ratings are established following a demonstration to the FAA that the applicant is capable of performing maintenance on specific articles. Following certification, the FAA expects that a repair station continues to manage and control its capabilities on each individual article it maintains. This is accomplished by the repair station ensuring that it has, for example, trained personnel, and the necessary data, facilities, and equipment.

Under the current Limited rating, a repair station is required to document each article it maintains on either a capability list, or on the repair station's operations specifications. For Class ratings, the FAA assumes that a repair station, using its own methods, manages its capabilities with the same level of detail (although this is not required). Under this Class rating system, what an individual repair station is actually capable of maintaining is for the most part known only to the repair station and the individual FAA principal inspector(s) assigned to manage that repair station's certificate.

The FAA believes it is critical that both a repair station and the FAA are able to identify the actual certified capabilities of that repair station at any given time. It is important that the actual capabilities of a repair station are documented and that the documentation is current. The 2006 NPRM was not clear as to how the articles should be listed on the capability list. The FAA is proposing to define what is required on the capability list by adding two terms. The first, ''series as applicable,'' would recognize that not all models have series. The second, ''basic part number,'' would be added to clarify that it is not necessary to list each model or part ''dash number.'' The requirements for identifying articles on the capabilities list would provide clarity, consistency, and flexibility.

If the repair station chooses to use a capability list, the proposed rule would require that it identify each airframe, powerplant, or propeller by manufacturer, model, and series as applicable. For a component rating, the proposed rule would require that the list identify each component for which the repair station is rated by manufacturer, manufacturer-designated nomenclature, and basic part number.

Currently, it is required that this level of documentation exists for each repair station with a Limited rating. The documentation is either on a capability list or listed on the repair station's operations specifications. For all ratings under the current rule, including Class ratings, a repair station must ensure that it has the housing, facilities, equipment, material, technical data, and trained personnel in place prior to performing maintenance on an article. To make this determination today, a repair station must be aware of the manufacturer, model, series, nomenclature, and basic part number, for example, of each article it wishes to maintain. Otherwise, the repair station would not know what data to obtain, what subjects to train personnel in, and what equipment to purchase.

The current practice of issuing Class ratings was found to have limitations and unforeseen consequences that were not apparent until the advent of new technology components and aircraft. Class ratings entitled repair stations to work on articles neither they nor the FAA ever envisioned would exist at the time the rating was issued. That the repair station would limit itself from working on certain articles for which it was not fully capable essentially provided, in effect, a limited Class rating. This proposed rule would eliminate Class ratings and require the ''writing down'' of this identifying information in a standard format for all repair stations. From this perspective, the FAA believes the burden on the industry would be an administrative one, in particular for those currently holding a class rating. However, the burden should be, for the most part, limited to the onetime transfer of the capability list to a standard format acceptable to the FAA. The FAA requests specific comments, observations, and suggestions regarding the elimination of class ratings.

To ease this burden and to standardize the method used to document capabilities, the FAA may develop a web-based capability list. The FAA believes that an FAA-hosted automated capability list, if created, should have a positive impact on FAA staff and resources. Currently, a certificated repair station with a Limited rating has the option to list the articles for which it is rated on a capabilities list, and to expand that list through a self-evaluation process. Under this proposed rule, all repair stations could proceed in one of two ways to add an article to their capabilities list. First, a repair station could submit a request to the FAA for approval. The request would have to document that the repair

station is capable of performing the requested work—it would have to demonstrate that it has the technical data, housing, facilities, equipment, material, processes, and trained personnel to perform the work on the article for which it seeks approval. Second, either during the repair station's initial application process, or later through an amendment to its operations specifications in accordance with proposed § 145.1058, the repair station could seek a general authorization in its operations specifications to perform a self-evaluation each time it wishes to add an article to its capabilities list. Similar to the criteria used in the individual request to the FAA method discussed in option one, the self-evaluation would be done to determine that the repair station has the technical data, housing, facilities, equipment, material, processes, and trained personnel to perform the work on the article it wishes to add to its capabilities list. If the self-evaluation determines that those criteria are met, the repair station could add the article without specific FAA approval.

The FAA considers the capabilities list self-evaluation process to be similar in concept to the self-evaluation process expected under the current Class ratings system. Both processes allow for a repair station to add to its capabilities list independent from FAA review. It is not the FAA's intent to reduce this flexibility with this proposed rule. However, under the current rule, Class ratings should not be authorized unless the repair station can prove the capability to maintain a representative number of products under the rating. Unlike the Class rating which considers a repair station's ability to maintain a range of product models, the proposed capability list self-evaluation authorization would take into account the adequacy of a repair station's quality control system to control the expansion of its capabilities independent from FAA review. A risk-assessment process would be used by the FAA to evaluate a new repair station applicant's ability to manage a self-evaluation program. Existing repair stations using a capability list and those with Class ratings could be authorized to perform self-evaluations for future capability changes and would not be required to reapply for this authorization. During the 24 months of the transition period, there would be no requirement for existing repair stations to perform self-evaluations on their current capabilities beyond what is contained in their current procedures.

Proposed § 145.1215(f) would require each repair station with a capability list to review its capabilities at least every two years, and to remove any article from the list that it is no longer capable of maintaining. The FAA believes this is a necessary quality element to ensure a repair station's capability list continually reflects its actual repair station capabilities.

h. Contract Maintenance (Current § 145.217/Proposed § 145.1217)

The FAA placed this section, Contract Maintenance, under the discussion of the proposed certification requirements because a repair station's contracting capability must be understood and evaluated during the certification of the repair station.

With the exception of a new paragraph (b)(4), and an expansion of the restrictions in paragraph (c), the proposed changes in this section are made to clarify the intent of the current rule. As in the current rule, proposed § 145.1217(a) allows a repair station to contract a ''maintenance function'' to an outside source provided certain conditions are met. Much confusion exists around the term ''maintenance function'' and when FAA approval is required when a repair station contracts such a function to an outside source.

The FAA does not approve who a certificated repair station contracts with. While this information must be maintained and made available to the FAA, each repair station is free to choose with whom it contracts. However, the rule currently requires, and this proposed rule would continue to require, that the FAA approve the maintenance function to be contracted. The basis of this requirement extends back to the original certification of the repair station. When an applicant applies for a rating, the applicant must declare what functions within the rating the repair station will contract out.

For example, an applicant for a Component rating to overhaul a specific fuel pump model may not be capable of rewinding armatures and may plan to contract this function out. Although the Component rating is a blanket authorization to overhaul the pump, the applicant has formally declared what functions within the rating it will contract out—in this case, armature rewinding. Another example would be an applicant for an Airframe rating who does not plan on developing capabilities for component overhaul and repair. The function contracted out would be component overhaul and repair. Proposed §§ 145.1217(a)(1) and 145.1209(e)(5) would continue to require the certificated repair station to maintain this contracted function information for the duration of the repair station certificate.

The overriding intent of current § 145.217(a)(1), and proposed § 145.1217(a)(1) is not for the FAA to restrict the ability of a repair station to contract out maintenance, but rather to ensure the repair station's capabilities are clearly stated at all times. Nevertheless, as currently provided in § 145.217(c) and in proposed § 145.1217(c), the FAA will not approve the contracting out of all maintenance functions encompassed in the repair station's rating. Such a practice would effectively render the part 145 certificate meaningless.

Clarification is needed as to what is not contract maintenance. Part 145 does not regulate the ''brokering'' of a complete article by a repair station. If a repair station is not exercising the privilege of its certificate, it is not contracting a maintenance function as covered by the proposed rule. A repair station can, as can any other certificated or noncertificated person, receive, ship, arrange for maintenance, or act as agent in the brokering of maintenance for others without being considered to be contracting maintenance. When a repair station exercises the privilege of its certificate by engaging in maintenance for which it is rated, and then initiates the involvement of another person in that maintenance, the repair station is engaging in contract maintenance.

For example, if a repair station with an Airframe rating removes an engine and ships the engine to a repair station with a Powerplant rating, it is not engaging in contract maintenance because it is not rated to perform powerplant maintenance. However, if during inspection it discovers a damaged engine mount, and subsequently sends the engine mount to another repair station or noncertificated facility for a weld repair and approves the work for return to service, it would be contracting maintenance under the repair station rating (see proposed § 145.1217). The repair station is contracting maintenance because, under its rating, it is authorized to do the work and approved it for return to service. Therefore, the repair station is exercising the privilege of its certificate in performing maintenance and it is rated for the weld repair by virtue of its Airframe rating.

Throughout § 145.217, the terms ''outside source'', ''outside facility'', and ''facility'' are used interchangeably. These terms are undefined and subject to inconsistent usage and confusion. For consistency and to eliminate confusion, the FAA proposes to replace these

undefined terms in proposed § 145.1217 with the term ''person,'' which is defined in § 1.1.

The FAA is proposing in § 145.1217(b)(1) to add a reference to the quality control system procedures proposed in § 145.1211(c)(1)(vi) to emphasize that the quality control system of each noncertificated person with whom a repair station contracts a maintenance function must be equivalent to its own. The contracting repair station must physically observe the quality control system of each noncertificated person with whom it wishes to contract and determine that it meets this standard before any maintenance is performed by that person.

The FAA is also proposing a new provision (§ 145.1217(b)(4)) to the contracting rule to emphasize specifically that the personnel requirements set forth in proposed § 145.1151(c) apply when maintenance is contracted to a noncertificated person. Current § 145.151(c) provides that each repair station must ensure that it has a sufficient number of qualified employees to ensure all work is performed in accordance with part 43. While it is implicit in that rule that those personnel requirements apply when work is contracted to noncertificated persons (because the contracting repair station is responsible for determining the airworthiness of articles before approving them for return to service), the FAA is proposing for clarity to add a phrase in proposed § 145.1151(c) specifically referring to work contracted to a noncertificated person.

To adequately perform the surveillance and verification requirements of § 145.1217(b), a certificated repair station would need a sufficient number of employees with the training or knowledge and experience in the maintenance function performed by the noncertificated person. This is necessary to assess the noncertificated person's ability to correctly perform the work and the proper completion of the work. In contracting a maintenance function to a noncertificated person, a repair station is not absolved from having corporate technical knowledge of the work performed under its rating. If it is not able to ensure such knowledge base in its employees, a repair station must be limited from, and broker the maintenance function to, a person appropriately certificated to perform and approve the work for return to service.

4. Repair Stations Providing Maintenance for Air Carriers (Current § 145.205/Proposed § 145.1205)

Current § 145.205 contains, and proposed § 145.1205 would contain, the regulations covering maintenance, preventive maintenance, and alterations performed for certificate holders under parts 121, 125, and 135, and for foreign air carriers or foreign persons operating U.S.-registered aircraft in common carriage under part 129.

a. ''Applicable Sections'' of a Maintenance Manual (Current § 145.205(a)/Proposed § 145.1205(a))

Currently, § 145.205(a) states that a repair station working for an air carrier or a commercial operator that has a continuous airworthiness maintenance program under part 121 or part 135 must follow the carrier's or commercial operator's program and ''applicable sections of its maintenance manual.'' Before the 2001 final rule, § 145.2 specified the additional requirements for repair stations performing maintenance work for air carriers or commercial operators under the continuous airworthiness requirements of parts 121 and 127 and for airplanes under the inspection program required by part 125. The FAA believed that parts of the regulation were difficult to follow because, for example, it required repair stations to comply with identified subparts, *e.g.,* ''subpart L of part 121'' (*except* for certain specified sections). In an attempt at clarity, in the 1999 NPRM the FAA proposed reversing that logic and, in proposed § 145.7, instead of listing the exceptions, the proposed rule identified the specific sections that, ''as applicable,'' would apply (*e.g.,* ''Each certificated repair station * * * must, as applicable, comply with * * *'' the specified sections as listed.). That proposal also generated adverse comments. The references to the various specified sections in parts 121 and 135 ''as applicable'' continued to confuse some commenters, some of whom also incorrectly inferred that the FAA intended to impose additional requirements by listing specific sections of the rule.

Based on these comments, the specific section references were not included in the 2001 final rule. These air carrier maintenance provisions are currently found in § 145.205 and, generally speaking, require repair stations to follow the air carrier's or operator's program and ''applicable sections of its maintenance manual.'' Repair stations that provide this type of work have stated that the term ''applicable sections'' causes confusion because it is subjective and vague. They point out that air carriers, air operators, and the FAA's inspectors interpret the term differently. Commenters to the 2006 NPRM voiced similar concerns for similar reasons with the change proposed there. Specifically, we proposed that repair stations must comply with ''the applicable parts of this chapter and follow the air carrier or commercial operator's program and applicable sections of its maintenance manual.'' The confusion expressed by the commenters carries a common theme, all involving the reference to ''applicable sections'' or ''as applicable.''

In proposed § 145.1205(a), we are attempting to clarify this issue by stating that when a repair station performs work as a maintenance provider for an air carrier or commercial operator, the repair station must perform that work in accordance with the instructions provided by that air carrier or air operator.

b. Certificate Holders Operating Under 14 CFR Part 125 (Current § 145.205(b)/ Proposed § 145.1205(b))

In proposed § 145.1205(b), the FAA would change the language currently in § 145.205(b) to include all operators that may have an approved aircraft inspection program. Currently, § 145.205(b) references only FAA-approved inspection programs for part 125 operators. However, some persons operating under part 135 may also have an FAA-approved inspection program and others may have selected an inspection program under § 91.409(e). Therefore, references to part 135 and § 91.409(e) would be included in proposed § 145.1205(b).

c. Foreign Persons Operating Under 14 CFR Part 129 (Current § 145.205(c))

If a reference to a foreign air carrier or foreign person operating a U.S.-registered aircraft under part 129 is added to proposed § 145.1205(a), it is no longer necessary to include a provision similar to § 145.205(c) in proposed § 145.1205. Each of these part 129 operators must have an FAA-approved maintenance program that must be followed by persons performing maintenance on these aircraft.

d. Line Maintenance (Current § 145.205(d))

The 1999 NPRM introduced the concept of line maintenance for repair stations. As proposed, line maintenance was intended to allow repair stations currently located at an air carrier's line station to perform simple scheduled servicing and unscheduled maintenance

that could be performed safely without the need to house the aircraft. This was intended to provide relief from the requirements of § 145.103(b), which requires a repair station with an airframe rating to have the ability to house the largest aircraft for which it is rated. This maintenance would not necessarily require housing the entire aircraft.

For reasons unstated, the 2001 final rule did not include a requirement that line maintenance be limited to those repair stations located at air carrier line stations. In addition, it introduced the concept that a repair station could perform line maintenance upon authorization by the FAA. It also included a definition of line maintenance (in § 145.3) that included ''any unscheduled maintenance resulting from unforeseen events.'' These additions imply that a repair station may perform 'any unscheduled maintenance' without meeting the prerequisites of part 145 for an appropriate rating, simply based on the issuance of an 'authorization' to perform 'line maintenance' for an air carrier or commercial operator.

Line maintenance was not intended to be a rating. Rather, it was meant to be an authorization for an appropriately rated repair station. The § 145.103(b) housing requirement applies to a repair station holding an Airframe rating. Section 145.205(d) is an authorization providing relief from that requirement under limited circumstances.

However, as applied, line maintenance authorization has been granted to repair stations without the appropriate ratings or facilities because the existing language implies that it is permissible. This was a concern expressed in comments in response to the introduction of the line maintenance authorization in 2001. In addition, the line maintenance concept has also resulted in repair stations that were created simply to perform line maintenance at many geographically disparate locations, which makes it almost impossible for the FAA to reasonably perform its safety oversight function.

To rectify this situation, the FAA is proposing to eliminate the current line maintenance concept by not including a provision similar to § 145.205(d) in proposed § 145.1205.

However, the performance of maintenance that could include line maintenance would still be an available option for a repair station. A repair station could be issued a limitation to an Airframe rating to identify and limit the work the repair station could perform. This could include line maintenance. With appropriate limitations, line maintenance is simply one example of work for which a limitation to an Airframe rating could be issued. With a limitation of line maintenance for a specified air carrier or commercial operator, the repair station would be permitted to perform maintenance limited to line maintenance, but there would be no authorization for line maintenance beyond the limitation to the rating.

If the line maintenance work is to be accomplished temporarily away from the repair station, this could be accommodated under the provisions of § 145.1203 (Work Performed at Another Location). If the location is in the United States and intended to be permanent, and is within the geographical boundaries of the local FAA Certificate Holding District Office, an additional fixed facility of the repair station as provided by proposed § 145.1103(d) may be appropriate. If the location is not within the geographical boundaries of the Certificate Holding District Office, certification of a separate repair station or satellite repair station under proposed § 145.1107 may be appropriate. This would reintroduce the original intent that this type of work would be limited to currently certificated repair stations at such locations where the work is needed.

The current definition of line maintenance does not correctly describe the scope of this level of maintenance. Therefore the FAA is also proposing to revise the definition of line maintenance in proposed § 145.1003(e). The definition would now reinforce that line maintenance is performed for air carriers, is generally performed at the ramp, parking area or gate, and typically will not exceed 24 continuous hours per aircraft.

5. Other Proposed Changes

a. Applicability (Proposed § 145.1001)

A new applicability statement is necessary to address the transition period. This language would direct applicants to subparts F through J for the regulations that would apply to them. This new section would continue to state that a repair station certificate is issued for the performance of maintenance, preventive maintenance, and alterations on civil products to which part 43 applies. The FAA cannot compel a person to hold a repair station certificate, so the phrase in current § 145.1 *or is required to hold* would be deleted as unnecessary. The FAA proposes instead that the rules would apply to any person who holds out as an FAA-certificated repair station.

b. Avionics (Proposed § 145.1003(c))

Aviation electronic technology has advanced dramatically since the advent of the current ratings system. Because of these advancements, the ARAC recommended the addition of an avionics rating. The FAA proposed such a rating in the 2006 NPRM. The commenters generally opposed a separate avionics rating. Most of these commenters stated that avionics are components and should simply be identified as such. Moreover, other commenters stated that confusion would exist if avionics were made a separate category of component.

To recognize advances in the field of aviation electronics and to reduce any confusion that exists regarding the differences and overlaps in the terms instruments, electronics, electrical systems, and avionics, the FAA is proposing to add a definition for the term ''Avionics'' in proposed § 145.1003(c). Under this definition, ''Avionics'' (i.e., aviation electronics) would be any component generally associated with processing digital electronic signals. Examples of such components include radios and navigation equipment, radar, and data processors.

c. Repair Station Records: Falsification, Reproduction, or Alteration (Proposed §§ 145.12 and 145.1012)

At present, part 145 does not contain a general prohibition against making fraudulent or intentionally false entries in repair station records or for making fraudulent reproduction or alteration of records or reports. Other parts of the regulations do contain similar proscriptions. For example, part 43 contains such prohibitions for maintenance records or reports, with a consequence of suspension or revocation of the applicable airman, operator, or production certificate and other specified privileges (see § 43.12.). Other regulations contain similar prohibitions (*e.g.,* intentionally false entries on applications and other records, and cheating on tests) with similar consequences (i.e., suspension or revocation of FAA-issued certificates or ratings (see. *e.g.,* §§ 61.37, 61.59, 63.18, 63.20, 65.18, 65.20, and 67.403.)). While § 43.12 provides for suspension or revocation of the applicable airman and other mentioned certificates and privileges for requisite maintenance record falsifications or fraudulent acts, it does not provide for repair station certificate suspension or revocation for the same kind of conduct.

Therefore, the FAA is proposing a new § 145.12 in subpart A, and a new

§ 145.1012 in subpart F, that would be similar to § 43.12. Under 49 U.S.C. 44701, the FAA is charged with promoting aviation safety. The importance of accurate records and reports cannot be overstated. In view of the FAA's limited resources, ''the agency, and ultimately the flying public, depend heavily on the integrity of the system of self-reports.'' *Twomey* v. *National Transp. Safety Bd.,* 821 F.2d 63, 68 (1st Cir. 1987). Because of the importance of honest and trustworthy records and reports to aviation safety, the FAA believes that any person who makes or causes to be made an intentionally false or fraudulent entry in any record or report the agency needs to provide proper oversight of repair stations should be subject to enforcement action as noted above. Accordingly, the agency is proposing suspension or revocation of not only the repair station certificate, but any certificate, approval, or authorization issued by the FAA and held by that person.

d. Amendment to or Transfer of Certificate (Current § 145.57/Proposed § 145.1056)

Although the one thousand series numbers (1xxx) in proposed subparts F through J generally have the same one hundred series number (xxx) for each corresponding regulation section in the current rule (subparts A through E), the FAA is proposing to deviate from this scheme for this section in order to accommodate two new proposed sections on operations specifications. Therefore, the proposed new section on ''Amendment to or transfer of certificate'' would be numbered § 145.1056, whereas the current section is numbered § 145.57. The proposed section captioned ''Operations specifications'' would be numbered § 145.1057. Also, as written, current § 145.57 contains confusing language that implies a repair station must apply for a change to its certificate without reason. The proposed section would change the confusing language and add a time limitation for submitting an application for a certificate amendment, change in location, or transfer of certificate.

e. Operations Specifications (Proposed § 145.1057)

Currently, part 145, Repair Stations, introduces the requirement for operations specifications in § 145.5, Certificate and operations specification requirements. Unlike other operating rules requiring operation specifications, part 145 does not explain what operation specifications are or what they must contain. Also unlike part 119, which clearly states in § 119.7 that with limited exceptions operations specifications are not a part of the certificate, some operators and FAA personnel assume repair station operations specifications are an extension of the repair station certificate, while others do not. The FAA is proposing to specify how long operations specifications are valid, what they must contain, and where they must be located. The FAA would also clarify that except for those operation specifications detailing ratings and limitations, repair station operations specifications are not a part of the repair station certificate.

f. Amending Operations Specifications (Proposed § 145.1058)

The proposed clarification of operations specifications in proposed § 145.1057, specifying that operations specifications are not a part of a certificate, would allow the FAA to make administrative changes to operations specifications other than ratings or limitations (*e.g.,* definitions or formatting) without having to resort to certificate action, when appropriate notice is given to the repair station. This section would provide procedures to be followed by both the FAA and repair stations for initiating changes to the operations specifications. Additionally, procedures would be provided for affected repair stations to petition for reconsideration of adverse decisions by the FAA, both in emergency and non-emergency situations.

g. Housing and Facilities (Current § 145.103/Proposed § 145.1103)

The FAA is proposing to amend the rules for housing and facilities to require that the housing for the facilities, equipment, materials, and personnel be both suitable and permanent. The agency is also proposing to provide an exception to the requirement that a repair station with an airframe rating must be able to enclose the largest type and model of aircraft on its operations specifications to facilitate those with a limitation to the airframe rating such that the entire aircraft would not need to be housed to provide appropriate environmental protection. As stated previously, this exception would facilitate repair stations with a limitation to perform line maintenance for air carriers. Finally, in addition to some minor clarifications, the FAA is proposing to allow a repair station to use multiple fixed locations if appropriate criteria are met.

i. Exception to Housing Requirement

Under current § 145.103(b), a certificated repair station with an Airframe rating must provide suitable permanent housing to enclose the largest type and model of aircraft listed on its operations specifications without consideration of the limits of the work being performed. Even if the work is limited to a certain part, portion, or section of the aircraft, a repair station must be able to house the entire aircraft if it has an Airframe rating.

To retain the level of safety established by certification of a repair station under part 145, but to lessen the impact to those repair stations performing line maintenance or other maintenance not normally associated with a requirement to have housing to enclose the entire aircraft, the FAA is proposing, in § 145.1103(b), to provide relief from the housing requirement of § 145.103(b). The proposed change would allow a repair station with an Airframe rating and appropriate limitations to that rating to perform the limited airframe maintenance without having housing to enclose the entire aircraft. If, as determined by the FAA, the repair station provides adequate environmental protection for the work being performed under the limitation to its rating, it would not be required to house the complete aircraft.

This is consistent with the housing exception for line maintenance found in § 145.205(d). The proposed rule permits an evaluation of the housing requirements based on limitations to the Airframe rating. This would allow for the certification of a repair station with an Airframe rating, limited to the performance of maintenance such as simple daily scheduled checks or some work limited to aircraft interiors, to not have housing to enclose the entire aircraft. Repair stations currently performing work under a line maintenance authorization could be provided appropriate housing relief by this proposed section if they otherwise meet the requirements of part 145. This change would provide clarity and some relief in not requiring that the entire airframe be enclosed if the FAA determines the repair station provides adequate environmental protection for the work being performed. This option would be available only for repair stations with an Airframe rating with limitations. If a repair station has an Airframe rating with no limitations or limitations allowing work on substantially an entire airframe, it would be required to have suitable permanent housing to enclose the largest aircraft for which it is rated.

ii. Permanent Location

Paragraph (a)(1) of § 145.103 requires each certificated repair station to provide housing for the facilities, equipment, materials, and personnel consistent with its ratings. It has long been FAA policy that a repair station must have a permanent fixed location from which to operate. There have been occasions where the housing used to obtain certification was either relinquished by the certificate holder to the facility owner, or further sub-leased for other purposes rendering the repair station essentially unable to perform the maintenance for which it was certificated. The FAA believes it is necessary to reinforce the need for repair stations to provide assurance that work is performed adequately and to the manufacturer's standards. This means protection of workers from unfavorable environmental conditions so that their performance and the airworthiness of the articles they are maintaining are not adversely affected. Repair stations would be required to provide suitable and permanent housing to protect the articles being maintained from contamination, foreign object debris, or conditions that may promote corrosion or other deteriorating conditions.

Therefore, the FAA proposes to revise this section to require ''suitable permanent'' housing. A requirement for permanent housing refers not only to the construction of the facility, but also to the fact that the certificate holder must have sole operational control at all times of the housing it uses to obtain certification, either by ownership or by contract. The FAA understands that repair stations may share the same hangar or building, and this would still be allowed under this proposal. However, these repair stations may not share the same space in that hangar or building and each repair station must have full control of its space at all times. In addition, it must be clearly defined as to what space is under the control or contract of each repair station and this space must be clearly defined in each repair station's manual as required in proposed § 145.1209(b).

iii. Multiple Fixed Locations

The FAA is also proposing to add a new § 145.1103(d) to allow a repair station to use multiple fixed locations in performing maintenance, preventive maintenance, and alterations under its repair station certificate. Additional fixed locations are not recognized in the current rule. This has led to inconsistent or non-authorization of the use of additional permanent locations. Repair stations often find it necessary to use locations other than the primary facility for environmental reasons (such as noise abatement for an engine overhaul shop doing test runs). In recognition of this need, additional fixed locations could be authorized if:

- The repair station applies for and receives approval of additional fixed locations.
- The location is within the geographic boundaries of the certificate holding district office.
- The location is permanently affixed and is under the managerial control and authority of the repair station certificate.
- The maintenance functions performed at the additional fixed locations are in support of and within the scope of the ratings listed on the repair station operations specifications.

If a fixed location were located outside of the geographic boundary of the FAA office with oversight responsibilities, the additional fixed location either would have to be certificated as a satellite repair station and meet the requirements of proposed § 145.1107, or it would require its own repair station certificate under the provisions of proposed § 145.1051 and § 145.1053.

iv. Additional Proposed Changes

The FAA is also proposing, in § 145.1103(a)(2), to delete the reference to specialized services currently found in § 145.103(a)(2). When used in conjunction with maintenance, preventive maintenance, and alterations, the reference to specialized services is redundant because complete maintenance of an article includes all necessary services. Finally, the FAA is also proposing to include protection of articles in § 145.1103(a)(2)(iv). Currently, a repair station's facility is required to include sufficient space to segregate articles and materials stocked for installation from those undergoing maintenance or alterations. The FAA is proposing to change ''segregate articles * * * '' in current § 145.103(a)(2)(iv) to ''segregate and protect articles * * *.'' in § 145.1103(a)(2)(iv) to be consistent with the intent not only to segregate but also to protect articles as stated in current § 145.103(a)(2)(i) and in proposed § 145.1103((a)(2)(i) ''for the proper segregation and protection of articles during all maintenance, preventive maintenance, or alterations.'' It is inconsistent to require articles to be protected during maintenance but not require them to be protected in storage prior to being used in maintenance.

To ensure that the housing and other environmental protections continue in force, the FAA is proposing to change the phrase in the first line of § 145.103(a) from ''repair station must provide-* * *'' to ''repair station must provide *and maintain*- * * *'' in proposed § 145.1103(a).

Finally, a grammatical error currently exists in § 145.103(a)(2)(ii) that the FAA would correct in proposed § 145.1103(a)(2)(ii) by adding the word ''of'' near the end of the sentence so that it reads ''alteration of articles * * *.''

h. Satellite Repair Stations (Current § 145.107/Proposed § 145.1107)

In proposed § 145.1107(a), the FAA proposes to remove the current restriction in § 145.107(a)(1) that a satellite repair station may not hold a rating not held by the certificated repair station with managerial control. The FAA believes that the agency should not impose these restrictions on satellite repair stations.

Additionally, the FAA proposes to require that an applicant for a satellite repair station submit the same repair station and quality control system manuals as the repair station with managerial control (proposed § 145.1107(a)(2)). The satellite repair station would have to identify any specific processes or procedures unique to the satellite repair station in appendices or sections of the manuals.

The other new paragraphs proposed in § 145.1107(a) would require a satellite repair station to:

- Submit the same training program as the repair station with managerial control, with processes or procedures unique to the satellite or managerial repair station identified (proposed paragraph (a)(3)).
- Demonstrate compliance with its manual and any additional manual sections applicable to the satellite (proposed paragraph (a)(4)).
- Meet the housing and facility requirements of proposed § 145.1103 since it is a separately certificated repair station (proposed paragraph (a)(5)).
- Have its own facility in a location with a physical address other than the repair station with managerial control (proposed paragraph (a)(6)).

Finally, the requirement currently in § 145.107(a)(2) that the satellite repair station meet the requirements for each rating it holds would be retained in proposed § 145.1107(a)(1).

i. General (Current § 145.101/Proposed § 145.1101)

The FAA proposes to add tools and test apparatus to the items that a repair station must provide under proposed § 145.1101. Tools and test apparatus are added for consistency with the maintenance performance requirements of § 43.13(a).

The FAA also proposes to add the word ''any'' to near the end of the sentence so that it reads ''any rating the repair station holds.''

j. Equipment, Materials, and Data Requirements (Current § 145.109/ Proposed 145.1109)

The FAA is proposing to add test apparatus and data to the list of items that a repair station would have to have on the premises and under its control when it is performing work requiring its use. This would remove potential uncertainty surrounding whether a necessary piece of test apparatus or data was considered to be ''equipment,'' ''tools,'' or neither. In addition, including test apparatus would be consistent with the requirements in § 43.13(a). Accordingly, the FAA is proposing to revise the section heading to include test apparatus.

The FAA is also proposing to include an element of the relief provided in current § 145.51(b) pertaining to meeting the equipment requirement by having a contract with another person to make the equipment available when the work it requires is being performed (see proposed § 145.1109(b)). The issue of whether all the equipment must be on site for initial inspection was discussed above in the context of the agency's proposing to delete the contract provision from the initial certification requirements in proposed § 145.1051(b). Although the agency believes it is important during initial certification to observe all the necessary equipment, tools, and apparatus for its placement on site and to evaluate an applicant's ability to use it, the FAA agrees with previous commenters who voiced concerns about not having to purchase expensive, seldom used equipment and to have it permanently in place when they could instead obtain it through contract when needed.

The relief proposed in § 145.1109(b) would allow a repair station to meet the equipment, tools, and test apparatus requirement of proposed § 145.1109(a) for specialized and rarely used equipment, tools, and test apparatus if the repair station demonstrates to the FAA that it has made arrangements with another person to make those items available when their use is required. All equipment must be in place during the demonstration and inspection phase of certification.

Currently, § 145.109(d) lists certain documents that repair stations must keep that are necessary for performing maintenance, preventive maintenance, or alterations. It requires that the documents be ''current and accessible when the relevant work is being done.'' A strict reading of the requirement that these documents be current has created unnecessary compliance and enforcement issues. A recent FAA legal interpretation clarified that ''current'' in this context means ''up to date,'' i.e. the most recent version (revision) of the document (*e.g.* maintenance manual) issued by the manufacturer. This is a paperwork requirement only, as the same interpretation made clear that if a maintenance provider used a prior version/revision of a manual in performing maintenance, there would be no violation of the maintenance performance rules unless the FAA could show that the data used was no longer acceptable. This is so because of the flexibility provided in the maintenance regulations. For example, the performance standards set forth in § 43.13(a) provides that the person performing maintenance shall use the current manufacturer's maintenance manual or Instructions for Continued Airworthiness [ICA], ''or other methods, techniques, and practices acceptable to the Administrator * * *.''

Enforcement issues have arisen because some inspectors have concluded that the requirement to have a document be ''current and accessible'' when work is being done means that the most up-to-the-minute manual revision be incorporated into the repair station's system even though such immediate incorporation may not be realistic. This can be due to a number of real-world constraints, (*e.g.,* mail delays, revision publishing and distribution logistics, and export constraints pertaining to technical data).

The housekeeping means for assuring appropriate compliance is contemplated in the current rule through the repair station's quality control system. Currently, § 145.211(a) requires that each repair station establish and maintain a quality control system acceptable to the FAA that ensures the airworthiness of the articles being maintained. Section 145.211(c) provides that, as part of a repair station's acceptable quality control system, the repair station must keep current a quality control manual in a format acceptable to the FAA, and specifies what that manual must include. Section 145.211(c)(1)(v) provides specifically that the manual include a description of the procedures used for ''[e]stablishing and maintaining current technical data for maintaining articles.''

In developing acceptable procedures for assuring the currency of the technical data, repair stations typically work with their local Certificate Holding District Offices (CHDOs) to tailor procedures that consider realistic time constraints to incorporate manual revisions and other changes/updates into their systems. So long as a repair station and its CHDO have established and agreed to realistic procedures for establishing and maintaining current data, it would be anomalous for an inspector to threaten enforcement action citing § 145.109(d) because a manufacturer had issued a revision that the repair station had not reasonably, in following its FAA-accepted quality control system, incorporated into its manual system.

In view of these considerations, and the fact that proposed § 145.1109(a) would require repair stations to have the technical data, etc., to perform their maintenance in accordance with part 43, a specific list of documents such as that found in current § 145.109(d) would be redundant and possibly limiting. Therefore, because proposed § 145.1109(a) requires the technical data, equipment, tools, test apparatus, and materials required by part 43, we are deleting subparagraph § 145.109(d) since it is inclusive in subparagraph § 145.1109(a).

k. Supervisory Personnel Requirements (Current § 145.153/Proposed § 145.1153)

Section 145.153(a) requires supervisors to oversee the work performed by any individuals who are unfamiliar with the methods, techniques, practices, aids, equipment, and tools used to perform maintenance. The FAA is proposing to simplify this requirement to specify that supervisors must be present to oversee the work being performed by the repair station (see proposed § 145.1153(a).

Section 145.153(b)(1) requires each supervisor employed by a repair station located inside the United States to be certificated under part 65. Supervisors may supervise only as allowed by the privileges of the certificate held as provided in part 65. For example, a supervisor certificated with only a Powerplant rating may not supervise personnel doing airframe maintenance, as the Powerplant rating does not provide that privilege.

The FAA is proposing in § 145.1153(b)(1) to revise this requirement to state that the supervisor be appropriately certificated under part 65 for the work being supervised. Prior to the 2001 rule change, the language was clear in § 145.39(d): ''Each person who is directly in charge of the maintenance functions of a repair station must be appropriately certificated under part 65 * * *''. The omission of ''appropriately'' in 2001 was an oversight that the FAA will correct by reinserting ''appropriately

certificated under part 65'' where such certification under part 65 is required. The appropriateness of the certificate is based in the privilege of the mechanic or repairman certificate issued under part 65 subpart D or E. For example, a supervisor who holds a mechanic certificate with airframe and powerplant ratings issued under part 65 would not be appropriately certificated to supervise work on instruments. A supervisor would need to hold a repairman certificate to supervise work on instruments. Currently, § 145.153(b)(2) contains a different set of qualifications for a supervisor employed by a repair station located outside the United States. For example, a supervisor in a foreign repair station is not required to be appropriately certificated under part 65. To eliminate these two dissimilar standards, the FAA is proposing two alternative paths for supervisor qualification in a repair station located outside the United States. The first would require the supervisor to have the appropriate certification under part 65; the second would require the supervisor to meet the repairman eligibility requirements of § 65.101(a)(1)(2)(3) and (5) (see proposed § 145.1153(b)(2)(i) and (ii)).

Finally, § 145.153(c) requires repair stations to ensure that each supervisor understands, reads, and writes English. The FAA is proposing in § 145.1153(c) that these supervisors also be able to speak English. This would help to confirm that supervisors read and understand English.

l. Inspection Personnel Requirements (Current § 145.155/Proposed § 145.1155)

Section 145.155 sets forth the experience requirements for inspection personnel. Currently, this section requires only that inspectors be able to understand, read, and write English. The FAA is proposing to add a requirement to proposed § 145.1155(b) that inspectors be able to speak English as well. As stated above, the FAA believes this would help to confirm that these inspection personnel read and understand English.

Section 145.155(a)(2) currently has the word ''and'' at the end of the section. This is an error as there is no § 145.155(a)(3). This error would not be carried over to proposed § 145.1155(a)(2) as the subsequent proposed § 145.1155(b) stands alone.

m. Personnel Authorized To Approve an Article for Return To Service (Current § 145.157/Proposed § 145.1157)

Section 145.157 sets forth the experience requirements for the person authorized to approve an article for return to service. Section 145.157(a) requires each person authorized to approve an article for return to service employed by a repair station located inside the United States to be certificated under part 65. For the reasons discussed above under proposed § 145.1153, the FAA is proposing in § 145.1157(b) that each person authorized to approve an article for return to service *be appropriately certificated* under part 65. The appropriateness of the certificate is based in the privilege of the mechanic or repairman certificate issued under part 65 subpart D or E.

Currently, § 145.157(b) contains a different set of qualifications for a person authorized to approve an article for return to service employed by a repair station located outside the United States. To harmonize these two dissimilar standards as much as possible, the FAA is proposing in § 145.1157(c) to require those persons employed by a repair station located outside the United States to meet either the certificate requirements of proposed § 145.1157(a) or the eligibility requirements of § 65.101(a)(1), (2), (3) and (5).

Section 145.157(c) requires that a repair station ensure that each person authorized to approve an article for return to service understands, reads, and writes English. For the reasons discussed above, the FAA is proposing in § 145.1157(d) that these persons also be able to speak English.

Finally, the FAA believes the requirements in current § 145.157 are set forth in a cumbersome manner. Therefore, the FAA is proposing to rearrange these requirements in proposed § 145.1157.

n. Records of Management, Supervisory, and Inspection Personnel (Current § 145.161/Proposed § 145.1161)

Section 145.161 sets forth the management, supervisory, and inspection personnel records that a repair station must maintain and make available to the FAA.

Section 145.161(a)(3) requires each repair station to maintain a roster of personnel authorized to sign a maintenance release for approving a maintained or altered article for return to service. To be consistent with the use of the term approval for return to service in §§ 43.5 and 43.7, and to eliminate confusion arising from the use of ''maintenance release for approving an article,'' the FAA is proposing to change this requirement to a roster of personnel authorized to approve for return to service a maintained or altered article (see proposed § 145.1161(a)(3)).

Section 145.161(a)(4) requires each repair station to maintain a summary of specified information on the employees listed in the rosters required by §§ 145.161(a)(1) through (a)(3). Section 145.161(a)(4)(iii) requires this summary to include past relevant employment with names of employers and periods of employment. The FAA is proposing in § 145.1161(a)(4)(iii) to require that past positions and types of maintenance performed be included in this format. This would confirm the relevancy of the listed past employment.

o. Training Requirements (Current § 145.163/Proposed § 145.1163)

Section 145.163 contains the requirements for a repair station's employee training program. The FAA is proposing in § 145.1163(a) to delete the implementation date requirements of § 145.163(a) as this is no longer applicable.

The FAA is also proposing that the training program requirements in § 145.163(b) be revised in proposed § 145.1163(b). Currently, the training program must ensure that each employee assigned to perform maintenance, preventive maintenance, or alterations, and inspection functions is capable of performing the assigned task. The FAA believes that the current requirement is too broad and lacks specific elements. Training in human factors, federal regulations, and repair station manuals, procedures, and forms are minimum subject areas that should be covered in all training programs submitted for approval. Therefore, the FAA is proposing in § 145.1163(b) to require that the training program ensure that employees who perform maintenance, preventive maintenance, and alterations be (1) capable of performing the assigned task, (2) trained in human factors relevant to aviation maintenance, (3) trained in the Federal Aviation Regulations as they relate to Part 145, and (4) trained in the repair station's manuals, procedures, and forms.

The FAA is also proposing clarifying changes to § 145.163(d) in proposed § 145.1163(d) resulting in the removal of a repetitive ''to its''.

p. Hazardous Materials Training (Current § 145.165/Proposed § 145.1165)

Section 145.165 sets forth the requirements for a repair station's employee hazardous materials training program.

Section 145.165(b) sets forth the job functions that an employee may not perform or directly supervise without having received appropriate hazardous materials training. Over the years, the

FAA has found that the phrase ''may not'' has not been interpreted as a complete prohibition of the action to which it is linked. To correct this ambiguity, the FAA is proposing in § 145.1165(b) to change the phrase ''may not'' to ''shall not.''

q. Privileges and Limitations of Certificate (Current § 145.201/Proposed § 145.1201)

Section 145.201 sets forth the privileges and limitations associated with a repair station certificate.

Section 145.201(a)(2) allows a repair station to arrange with another person to perform the work for which the repair station is rated. It also contains certain requirements if that person is not certificated under part 145. The FAA is proposing in § 145.1201 to clarify that if a repair station arranges for another person to perform work for the repair station it must comply with proposed § 145.1217 (Contract Maintenance). This would clarify the authority of the repair station to contract maintenance to another person and the responsibility it has if it chooses to do so.

The current limitation in § 145.201(b) providing that a repair station may not maintain or alter any article for which it is not rated has caused confusion concerning the responsibilities of repair stations and their oversight by the FAA. Part 145 contains the rules repair stations must follow when working on articles to which part 43 applies, yet § 145.201(b) is drafted broadly and would seem to prohibit work on articles not governed by part 43. Rather than proposing an amendment that would explain in the text of the paragraph that the prohibition applies only to articles governed by part 43, the FAA proposes to clarify the issue by combining the text currently in §§ 145.201(b) and (c) into proposed § 145.1201(b). This would provide a single list of when a repair station may not approve an article for return to service.

r. Repair Station Manual (Current § 145.207/Proposed § 145.1207)

Section 145.207 contains the requirement for a repair station manual and sets forth a repair station's obligations for making its manual accessible to its personnel and providing current copies to its FAA district office, while Section 145.211 contains the requirement for a quality control manual. For readability and to eliminate repetition, the FAA is proposing in § 145.1207 to address similar requirements for each manual in a combined introductory section. The FAA will also simplify the listing of manual requirements by removing the repeated preliminary term ''A certificated repair station must * * *'' currently in each paragraph of § 145.207. The FAA also proposes to add an introductory statement ''A certificated repair station must:''. To recognize the combined introduction, section 145.1207 is titled Repair Station and Quality Control Manuals.

s. Repair Station Manual Contents (Current § 145.209/Proposed § 145.1209)

The content requirements for a repair station's manual are currently located in § 145.209. Of the 11 listed paragraphs, seven require listing procedures and three require descriptions. The FAA is proposing to consolidate and re-sequence the requirements in § 145.209(b), (c) and (d) and include updated references in proposed § 145.1209. This consolidation would eliminate repetitive terms (''Procedures for'' and ''A description of''), reduce the number of paragraphs from eleven to five, and require a resequencing.

The FAA is also proposing to revise the text currently in § 145.209(d)(1) in proposed § 145.1209(d)(1) to add procedural requirements to the repair station manual for FAA approval of capability list changes when self-evaluation is not authorized. Proposed § 145.1209(d)(2) would also be revised to include what would be expected of a repair station when performing a self-evaluation.

Finally, the FAA is proposing to add a requirement in § 145.1209(d)(2)(iv) that repair stations retain documentation of the self-evaluation for two years.

t. Quality Control System (Current § 145.211/Proposed § 145.1211)

This section would remain essentially unchanged, with the exception of adding requirements for suspected unapproved parts and ensuring maintenance not completed as a result of shift change or similar interruption is properly completed.

u. Inspection of Maintenance, Preventive Maintenance, or Alterations (Current § 145.213/Proposed § 145.1213)

Section 145.213(d) states that only an employee certificated under part 65 is authorized to sign off on final inspections and maintenance releases for the repair stations. The FAA is proposing to remove this paragraph in proposed § 145.1213 as it is repetitive and conflicts with the requirements of proposed § 145.1157. The FAA is also proposing to remove the term ''maintenance release'' from proposed § 145.1213 to be consistent with part 43.

v. Recordkeeping (Current § 145.219/Proposed § 145.1219)

Section 145.219 sets forth the recordkeeping requirements for a repair station. Section 145.219(b) requires a repair station to provide a copy of the maintenance release to the owner or operator of the article on which the work was performed. To be consistent with § 43.5 (Approval for return to service after maintenance, preventive maintenance, rebuilding, or alteration) and § 43.7 (Persons authorized to approve aircraft, airframes, aircraft engines, propellers, appliances, or component parts for return to service after maintenance, preventive maintenance, rebuilding, or alteration), the FAA is proposing in § 145.1219 to replace the term ''maintenance release'' with ''approval for return to service.''

w. Consistency Changes in Parts 43 and 91

Based on the above proposals, we are also proposing changes to the following sections in parts 43 and 91: Appendix B of part 43, § 91.171, § 91.319, § 91.327, § 91.411, § 91.413, and Appendix A to Part 91. These sections/appendices currently reference some element of a repair station's operations that would be changed based on the proposals in this document. As such, these sections/appendices would need to be modified to be consistent with such proposals.

III. Regulatory Evaluation, Regulatory Flexibility Determination, International Trade Impact Assessment, and Unfunded Mandates Assessment

Changes to Federal regulations must undergo several economic analyses. First, Executive Order 12866 and Executive Order 13563 direct that each Federal agency shall propose or adopt a regulation only upon a reasoned determination that the benefits of the intended regulation justify its costs. Second, the Regulatory Flexibility Act of 1980 (Pub. L. 96–354) requires agencies to analyze the economic impact of regulatory changes on small entities. Third, the Trade Agreements Act (Pub. L. 96–39) prohibits agencies from setting standards that create unnecessary obstacles to the foreign commerce of the United States. In developing U.S. standards, this Trade Act requires agencies to consider international standards and, where appropriate, that they be the basis of U.S. standards. Fourth, the Unfunded Mandates Reform Act of 1995 (Pub. L. 104–4) requires agencies to prepare a written assessment of the costs, benefits, and other effects of proposed or final rules that include a Federal mandate

likely to result in the expenditure by State, local, or tribal governments, in the aggregate, or by the private sector, of $100 million or more annually (adjusted for inflation with the base year of 1995). This portion of the preamble summarizes the FAA's analysis of the economic impacts of this proposed rule.

In conducting these analyses, FAA has determined that this proposed rule: (1) Has benefits that justify its costs, (2) is not an economically ''significant regulatory action'' as defined in section 3(f) of Executive Order 12866, (3) is ''significant'' as defined in DOT's Regulatory Policies and Procedures; (4) would not have a significant economic impact on a substantial number of small entities; (5) would not create unnecessary obstacles to the foreign commerce of the United States; and (6) would not impose an unfunded mandate on state, local, or tribal governments, or on the private sector by exceeding the threshold identified above. These analyses are summarized as follows.

Who Is Potentially Affected by This Proposed Rule

There are 4,105 repair stations in the United States and 739 repair stations in 64 foreign countries that the FAA has certificated to work on N-registered airplanes. For purposes of this analysis, of those 4,105 repair stations, 1,838 are defined to be ''small'' with 10 or fewer employees, 1,913 are defined to be ''medium-sized'' with between 11 and 199 employees, and 354 are defined to be ''large'' with 200 or more employees. The FAA also forecasts that 106 repair stations in the United States will annually seek to be certified by the FAA. Finally, although this proposed rule would also affect existing and future repair stations in foreign countries, Executive Order 12866 requires the FAA to analyze the economic impacts of this proposed rule only on repair stations located in the United States.

Total Benefits and Costs of This Rule

The total costs of this proposal would be relatively small ($14.493 million over a 10-year period, spread amongst approximately 5,000 repair stations), but it is difficult to quantify the benefits. We believe, however, that the potential benefits, which derive in part from (1) Giving the FAA authority to (a) deny a repair station certificate to an applicant whose past performance resulted in a revocation, and (b) revoke all FAA-issued certificates held by any person who makes fraudulent or intentionally false entries or records; (2) defining what operations specifications are and providing a well-defined process for both industry and the FAA to amend them; and (3) updating the ratings system, justify the costs of the proposed rule.

The current rule provides that, with certain unrelated restrictions, an applicant who meets the requirements of the rule is entitled to a repair station certificate regardless of a past regulatory non-compliance history, no matter how egregious. Currently an applicant, based on a successful showing of meeting the minimum requirements for a certificate (*e.g.,* the personnel, housing, facilities, equipment, materials, and data) is entitled to a certificate regardless of past negative performance, such as multiple rule violations or having a certificate revoked. This entitlement provides no latitude to the FAA. Based on a fatal accident that likely would not have occurred if the FAA had a mechanism in place to deny a certificate to a ''bad actor,'' the National Transportation Safety Board (NTSB) identified this entitlement as a potential safety issue, and the FAA agrees.

The FAA is aware of instances where persons whose repair station certificates were revoked continued to operate by obtaining new repair station certificates shortly after the revocation process. In one of these situations, a key management official with decision-making authority (chief inspector) from a repair station that lost its certificate for serious maintenance-related violations applied for and received a new repair station certificate. That individual also became the chief inspector at the newly-certificated repair station. While under the chief inspector's direction, employees of the newly-certificated station performed improper maintenance on a number of propellers, one of which came apart in flight causing a fatal accident.

As a result of this accident, the National Transportation Safety Board (NTSB), in a Safety Recommendation dated February 9, 2004 (A–04–01 and A–04–02), expressed concern that the FAA did not have a mechanism for preventing individuals who were associated with a previously revoked repair station, such as the owner described above, from continuing to operate through a new repair station. The NTSB noted that the FAA has such a mechanism in place for air carriers and other commercial operators. Section 119.39(b) allows the FAA to deny an application for a Part 121 or 135 air carrier or operating certificate. This can occur if the applicant previously held a certificate that was revoked or if a person who exercised control over (or held a key management position in) a previously revoked operator will be exercising control over (or hold a key management position in) the new operator.

With total present-value costs over a ten year period of $13.045 million, this rule would be cost-beneficial if it prevents at least three fatalities over 10 years. This benefit could accrue from preventing one or more fatal accidents during the ten-year period, depending on the number of persons who would have been on board. The FAA believes that one or more such accidents are likely to occur during that period and this rule is necessary to prevent them. If this proposed provision had been in place prior to the accident described above, the FAA would have denied the repair station certificate application, and the faulty propeller maintenance would not have occurred—thus, neither would the accident.

In concurrence with an NTSB recommendation, the proposed rule would change this entitlement to an eligibility that will provide the FAA the ability to deny a certificate application based on enforcement history, as is currently the case with air carrier applicants. Also, a repair station certificate is effective until surrendered, suspended, or revoked. A repair station under investigation could potentially surrender a certificate to terminate an ongoing investigation resulting in a lack of enforcement history. The NTSB recommended, and the FAA agrees, that a repair station should not be able to force the FAA to terminate an investigation by surrendering a certificate which would result in a lack of enforcement history. This history would be important evidence to support the agency's denying a certificate under the previously described circumstances. In concurrence with the NTSB recommendation, the proposed rule would specify that a certificate surrender is not valid until the FAA accepts the certificate. The costs of being able to deny certification to an applicant with a history of non-compliance is minimal, but the benefits are the potential avoidance of accidents, thereby increasing the safety of the flying public.

We also believe the current ratings system, which dates to the 1930's and 1940's, does not adequately address the way current aircraft are constructed and maintained. The current ratings system hampers the FAA's ability to appropriately rate repair stations, and it impedes repair stations' ability to accurately describe the work they perform. The repair station community and the FAA have struggled, and continue to struggle, with the

application of current technology and business practices in an antiquated rule. The proposed rule would accommodate current technologies and provide regulatory flexibility to accommodate future technological development. This would benefit the repair station community by applying modern, consistent, unambiguous terminology throughout the regulated industry.

The proposed rule would also allow a repair station the option of either maintaining its current procedures in applying for a rating or providing the FAA with a capabilities list stating the products on which it can work. In recent years, some repair stations have preferred to develop a capabilities list, which can more efficiently be used to obtain FAA approvals for expanding product work. Repair stations would be allowed to use a capabilities list so long as the list follows the FAA format that would be developed. This format consistency would allow the FAA to more efficiently know exactly which repair stations are performing specific repairs. The FAA is unable to estimate this potential efficiency savings and requests data from the public on these benefits.

The proposed rule would also allow a repair station the option of either maintaining its current procedures in applying for a rating or to supply the FAA with a capabilities list stating the products on which it can work. In recent years, some repair stations have preferred to develop a capabilities list, which can more efficiently be used to obtain FAA approvals for expanding product work. Repair stations would be allowed to use a capabilities list so long as the list follows the FAA format that would be developed. This format consistency would allow the FAA to more efficiently know exactly which repair stations are performing specific repairs. The FAA is unable to estimate this potential efficiency savings and requests data from the public.

As seen in Table 1, during the 2011–2020 period of this analysis, the proposed rule would impose compliance costs of $14.493 million on existing and future repair stations, which have a present value of $13.045 million using a 7 percent discount rate and a present value of $13.836 million using a 3 percent discount rate.

TABLE 1—TOTAL AND PRESENT VALUE COMPLIANCE COSTS BY US REPAIR STATION SIZE

[2011–2020]

[Millions of 2010 dollars]

Repair station size (Number of employees)	Number of repair stations	Compliance costs		
			Present value	
		Total	7 Percent	3 Percent
Small (1–10)	1,838	$1.949	$1.738	$1.852
Medium (11–199)	1,913	5.226	4.699	4.987
Large (200+)	354	7.318	6.608	6.997
Total	4,105	14.493	13.045	13.836

As seen in Table 2, the FAA estimates that the average one-time compliance cost would be $1,146 for a small repair station, $2,848 for a medium-sized repair station, and $21,474 for a large repair station.

TABLE 2—AVERAGE ONE-TIME COMPLIANCE COSTS FOR A REPAIR STATION BY REPAIR STATION SIZE

[2011–2020]

Repair station size	One-time
Small	$1,146
Medium	2,848
Large	21,474

Consequently, in light of the propeller accident and the NTSB recommendation based on it, the FAA believes that the proposed rule's potential benefits would be greater than its potential compliance costs if it prevented an accident with at least three fatalities during the next ten years.

Cost Assumptions and Sources of Information

- Discount rates—7% and 3%.
- Period of analysis—2011–2020.
- Monetary values expressed in 2010 dollars.

Costs of This Rulemaking

The proposed rule would impose compliance costs on repair stations to

1. Apply for a rating; and
2. Revise their manuals.

As seen in Table 3, the estimated total compliance costs of the proposed repair station manual revision ($12.869 million) would be approximately 88 percent of the total compliance costs.

TABLE 3—SUMMARY OF TOTAL AND PRESENT VALUES OF THE COMPLIANCE COSTS BY PROVISION AND BY REPAIR STATION SIZE

[2011–2020]

[Millions of 2010 dollars]

Provision	Compliance costs		
		Present value	
	Total	7 Percent	3 Percent
Rating System Application	$1.624	$1.412	$1.524
Repair Station Manual Revision	12.869	11.633	12.312

TABLE 3—SUMMARY OF TOTAL AND PRESENT VALUES OF THE COMPLIANCE COSTS BY PROVISION AND BY REPAIR STATION SIZE—Continued

[2011–2020]
[Millions of 2010 dollars]

Provision	Compliance costs		
		Present value	
	Total	7 Percent	3 Percent
Total	14.493	13.045	13.836

Regulatory Flexibility Determination

The Regulatory Flexibility Act of 1980 (Pub. L. 96–354) (RFA) establishes ''as a principle of regulatory issuance that agencies shall endeavor, consistent with the objectives of the rule and of applicable statutes, to fit regulatory and informational requirements to the scale of the businesses, organizations, and governmental jurisdictions subject to regulation. To achieve this principle, agencies are required to solicit and consider flexible regulatory proposals and to explain the rationale for their actions to assure that such proposals are given serious consideration.'' The RFA covers a wide range of small entities, including small businesses, not-for-profit organizations, and small governmental jurisdictions.

Agencies must perform a review to determine whether a rule will have a significant economic impact on a substantial number of small entities. If the agency determines that it will, the agency must prepare a regulatory flexibility analysis as described in the RFA.

However, if an agency determines that a rule is not expected to have a significant economic impact on a substantial number of small entities, section 605(b) of the RFA provides that the head of the agency may so certify and a regulatory flexibility analysis is not required. The certification must include a statement providing the factual basis for this determination, and the reasoning should be clear.

The FAA believes that this proposed rule would not have a significant impact on a substantial number of small entities for the following reason:

The Small Business Administration classifies ''small'' entities based on either employment or annual revenue. For this proposed rule, a small entity is defined as ''Other Support Activities for Air Transportation'' (North American Industrial Classification System 488190) with revenues of $7 million or less. Revenue data compiled by Dun and Bradstreet indicates that of the repair stations for which data are available, 2,354 repair stations have revenues of $7 million or less and that the average revenue per small entity is $1,272,500. The initial compliance cost to a small repair station would average about $4,000. This cost would be less than one percent of the average annual revenue and less than two percent of the annual revenue for firms that earn more than $200,000.

Therefore, the FAA certifies that this proposed rule would not have a significant economic impact on a substantial number of small entities. The FAA solicits comments regarding this determination.

Unfunded Mandates Assessment

Title II of the Unfunded Mandates Reform Act of 1995 (Pub. L. 104–4) requires each Federal agency to prepare a written statement assessing the effects of any Federal mandate in a proposed or final agency rule that may result in an expenditure of $100 million or more (in 1995 dollars) in any one year by State, local, and tribal governments, in the aggregate, or by the private sector; such a mandate is deemed to be a ''significant regulatory action.'' The FAA currently uses an inflation-adjusted value of $143.1 million in lieu of $100 million. This proposed rule does not contain such a mandate; therefore, the requirements of Title II of the Act do not apply.

International Trade Impact Assessment

The Trade Agreements Act of 1979 (Pub. L. 96–39), as amended by the Uruguay Round Agreements Act (Pub. L. 103–465), prohibits Federal agencies from establishing standards or engaging in related activities that create unnecessary obstacles to the foreign commerce of the United States. Pursuant to these Acts, the establishment of standards is not considered an unnecessary obstacle to the foreign commerce of the United States, so long as the standard has a legitimate domestic objective, such as the protection of safety, and does not operate in a manner that excludes imports that meet this objective. The statute also requires consideration of international standards and, where appropriate, that they be the basis for U.S. standards. The FAA has assessed the potential effect of this proposed rule and determined that it would ensure the safety of the American public and does not exclude foreign repair stations that meet this objective. As a result, this rule is not considered as creating an unnecessary obstacle to foreign commerce.

Paperwork Reduction Act

The Paperwork Reduction Act of 1995 (44 U.S.C. 3507(d)) requires that the FAA consider the impact of paperwork and other information collection burdens imposed on the public. According to the 1995 amendments to the Paperwork Reduction Act (5 CFR 1320.8(b)(2)(vi)), an agency may not collect or sponsor the collection of information, nor may it impose an information collection requirement unless it displays a currently valid Office of Management and Budget (OMB) control number.

This proposal contains a revision of a currently approved collection (OMB–2120–0682) subject to review by the Office of Management and Budget (OMB) under the Paperwork Reduction Act of 1995 (44 U.S.C. 3507(d)). The title, description, and number of respondents, frequency of the collection, and estimate of the annual total reporting and recordkeeping burden are shown below:

Title: Repair Stations (14 CFR part 145).

Summary: Part 145 describes how to obtain a repair station certificate. The part also contains the rules a certificated repair station must follow related to its performance of maintenance, preventive maintenance, or alterations of an aircraft, airframe, aircraft engine, propeller, appliance, or component part to which part 43 applies. It also applies to any person who holds or is required to hold a repair station certificate issued under this part.

Use: Specifically, the information is required from applicants who wish repair station certification. Applicants

must submit the required data to the appropriate FAA District Office for review and acceptance/approval. If the information is satisfactory, an onsite inspection is conducted. When all Part 145 requirements are met an air agency certificate and repair station operations specifications with appropriate ratings and limitations is issued.

Part 145 is being updated and revised. The action is necessary because many portions of the current regulations do not reflect current repair station business practices, aircraft maintenance practices, or advances in aircraft technology.

Respondents: There are 3,704 repair stations.

Frequency: The FAA expects this to be a one-time burden on the affected public.

Annual Burden Estimate:

- Estimated average burden per employee: $31 for a One-Time Collection.
- Estimated Annual Burden Hours: 0 Hours.
- Estimated Annual Burden Costs: $0.

The agency is soliciting comments to:

(1) Evaluate whether the proposed information requirement is necessary for the proper performance of the functions of the agency, including whether the information will have practical utility;

(2) Evaluate the accuracy of the agency's estimate of the burden;

(3) Enhance the quality, utility, and clarity of the information to be collected; and

(4) Minimize the burden of collecting information on those who are to respond, including by using appropriate, automated, electronic, mechanical, or other technological collection techniques or other forms of information technology.

Individuals and organizations may send comments on the information collection requirement to the address listed in the **ADDRESSES** section at the beginning of this preamble by August 20, 2012. Comments also should be submitted to the Office of Management and Budget, Office of Information and Regulatory Affairs, Attention: Desk Officer for FAA, New Executive Building, Room 10202, 725 17th Street NW., Washington, DC 20053.

IV. International Compatibility

In keeping with U.S. obligations under the Convention on International Civil Aviation, it is FAA policy to conform to International Civil Aviation Organization (ICAO) Standards and Recommended Practices to the maximum extent practicable. The FAA has determined that there are no ICAO Standards and Recommended Practices that correspond to these proposed regulations.

Executive Order Determinations

A. Executive Order 13132, Federalism

The FAA has analyzed this proposed rule under the principles and criteria of Executive Order 13132, Federalism. We determined that this action would not have a substantial direct effect on the States, on the relationship between the national Government and the States, or on the distribution of power and responsibilities among the various levels of government, and, therefore, would not have federalism implications.

B. Executive Order 13211, Regulations that Significantly Affect Energy Supply, Distribution, or Use

The FAA has analyzed this NPRM under Executive Order 13211, Actions Concerning Regulations that Significantly Affect Energy Supply, Distribution, or Use (May 18, 2001). We have determined that it is not a ''significant energy action'' under the executive order and it is not likely to have a significant adverse effect on the supply, distribution, or use of energy.

Environmental Analysis

FAA Order 1050.1E identifies FAA actions that are categorically excluded from preparation of an environmental assessment or environmental impact statement under the National Environmental Policy Act in the absence of extraordinary circumstances. The FAA has determined this proposed rulemaking action qualifies for the categorical exclusion identified in paragraph 312(d) and involves no extraordinary circumstances.

Additional Information

Comments Invited

The FAA invites interested persons to participate in this rulemaking by submitting written comments, data, or views. We also invite comments relating to the economic, environmental, energy, or federalism impacts that might result from adopting the proposals in this document. The most helpful comments reference a specific portion of the proposal, explain the reason for any recommended change, and include supporting data. To ensure the docket does not contain duplicate comments, please send only one copy of written comments, or if you are filing comments electronically, please submit your comments only one time.

We will file in the docket all comments we receive, as well as a report summarizing each substantive public contact with FAA personnel concerning this proposed rulemaking. Before acting on this proposal, we will consider all comments we receive on or before the closing date for comments. We will consider comments filed after the comment period has closed if it is possible to do so without incurring expense or delay. We may change this proposal in light of the comments we receive.

Proprietary or Confidential Business Information

Do not file in the docket information that you consider to be proprietary or confidential business information. Send or deliver this information directly to the person identified in the **FOR FURTHER INFORMATION CONTACT** section of this document. You must mark the information that you consider proprietary or confidential. If you send the information on a disk or CD–ROM, mark the outside of the disk or CD–ROM and also identify electronically within the disk or CD–ROM the specific information that is proprietary or confidential.

Under 14 CFR 11.35(b), when we are aware of proprietary information filed with a comment, we do not place it in the docket. We hold it in a separate file to which the public does not have access, and we place a note in the docket that we have received it. If we receive a request to examine or copy this information, we treat it as any other request under the Freedom of Information Act (5 U.S.C. 552). We process such a request under the DOT procedures found in 49 CFR part 7.

Availability of Rulemaking Documents

You can get an electronic copy of rulemaking documents using the Internet by—

1. Searching the Federal eRulemaking Portal (*http://www.regulations.gov*);
2. Visiting the FAA's Regulations and Policies Web page at *http://www.faa.gov/regulations_policies* or
3. Accessing the Government Printing Office's Web page at *http://www.gpo.gov/fdsys/.*

You can also get a copy by sending a request to the Federal Aviation Administration, Office of Rulemaking, ARM–1, 800 Independence Avenue SW., Washington, DC 20591, or by calling (202) 267–9680. Make sure to identify the docket number or notice number of this rulemaking.

You may access all documents the FAA considered in developing this proposed rule, including economic analyses and technical reports, from the internet through the Federal eRulemaking Portal referenced in paragraph (1).

List of Subjects in 14 CFR Part 43

Aircraft, Aviation safety.

List of Subjects in 14 CFR Part 91

Aircraft, Airmen, Aviation safety, Reporting and recordkeeping requirements.

List of Subjects in 14 CFR Part 145

Air carriers, Air transportation, Aircraft, Aviation safety, Recordkeeping and reporting, Safety.

The Proposed Amendment

In consideration of the foregoing, the Federal Aviation Administration proposes to amend Chapter I of Title 14, Code of Federal Regulations, as follows:

PART 43—MAINTENANCE, PREVENTIVE MAINTENANCE, REBUILDING, AND ALTERATION

1. The authority citation for part 43 continues to read as follows:

Authority: 49 U.S.C. 106(g), 40113, 44701, 44703, 44705, 44707, 44711, 44713, 44717, 44725.

2. Amend Appendix B by revising paragraph (b)(3) to read as follows:

Appendix B to Part 43—Recording of Major Repairs and Major Alterations

* * * * *

(b) * * *

(3) Give the aircraft owner an approval for return to service signed by an authorized representative of the repair station and incorporating the following information:

* * * * *

PART 91—GENERAL OPERATING AND FLIGHT RULES

3. The authority citation for part 91 continues to read as follows:

Authority: 49 U.S.C. 106(g), 1155, 40103, 40113, 40120, 44101, 44111, 44701, 44704, 44709, 44711, 44712, 44715, 44716, 44717, 44722, 46306, 46315, 46316, 46504, 46506–46507, 47122, 47508, 47528–47531, articles 12 and 29 of the Convention on International Civil Aviation (61 Stat. 1180).

4. Amend § 91.171 by revising paragraph (b)(1) to read as follows:

§ 91.171 VOR equipment check for IFR operations.

* * * * *

(b) * * *

(1) Use, at the airport of intended departure, an FAA-operated or approved test signal or a test signal radiated by an appropriately rated repair station or, outside the United States, a test signal operated or approved by an appropriate authority to check the VOR equipment (the maximum permissible indicated bearing error is plus or minus 4 degrees); or

* * * * *

5. Amend § 91.319 by revising paragraph (g)(1) to read as follows:

§ 91.319 Aircraft having experimental certificates: Operating limitations.

* * * * *

(g) * * *

(1) Been inspected by an appropriately certificated person in accordance with the operating limitations issued as part of the airworthiness certificate for that aircraft; or

* * * * *

6. Amend § 91.327 by revising paragraphs (b)(1) and (2) and (c)(1) to read as follows:

§ 91.327 Aircraft having a special airworthiness certificate in the light-sport category: Operating limitations.

* * * * *

(b) * * *

(1) The aircraft is maintained by an appropriately certificated person in accordance with the applicable provisions of part 43 of this chapter;

(2) A condition inspection is performed once every 12 calendar months by an appropriately certificated person in accordance with the operating limitations issued as part of the airworthiness certificate for that aircraft;

* * * * *

(c) * * *

(1) Been inspected by an appropriately certificated person in accordance with the operating limitations issued as part of the airworthiness certificate for that aircraft and been approved for return to service in accordance with part 43 of this chapter; or

* * * * *

7. Amend § 91.409 by revising paragraph (d)(1) to read as follows:

§ 91.409 Inspections.

* * * * *

(d) * * *

(1) An appropriately certificated person or the manufacturer of the aircraft to supervise or conduct the progressive inspection.

* * * * *

8. Amend § 91.411 by revising paragraph (b)(2) to read as follows:

§ 91.411 Altimeter system and altitude reporting equipment tests and inspections.

* * * * *

(b) * * *

(2) An appropriately certificated person.

* * * * *

9. Amend § 91.413 by revising paragraph (c)(1) to read as follows:

§ 91.413 ATC transponder tests and inspections.

* * * * *

(c) * * *

(1) An appropriately certificated person.

* * * * *

10. Amend Appendix A to part 91.413 by revising paragraph (b)(1) in section 4 as follows:

Appendix A to Part 91—Category II Operations: Manual, Instruments, Equipment, and Maintenance

* * * * *

4. Maintenance program

* * * * *

(b) * * *

(1) It must be performed by an appropriately certificated person.

* * * * *

PART 145—REPAIR STATIONS

11. The authority citation for part 145 continues to read as follows:

Authority: 49 U.S.C. 106(g), 40113, 44701–44702, 44707, 44709, 44717.

12. Revise § 145.1 to read as follows:

§ 145.1 Applicability.

Subparts A through E of this part:

(a) Expire and are reserved on [the date 24 months after the effective date of the rule].

(b) Apply to repair stations certificated prior to [the effective date of the rule] until such time as those repair stations apply for and are certificated under subparts F through J of this part, or [the date 24 months after the effective date of the rule] whichever occurs first.

(c) Contain the rules a repair station certificated prior to [the effective date of the rule] must follow related to its performance of maintenance, preventive maintenance, or alterations of an aircraft, airframe, aircraft engine, propeller, appliance, or component part to which part 43 of this chapter applies, until such time as those repair stations must comply with subparts F through J of this part. It also applies to any person who holds out as an FAA-certified repair station certificate issued under this part.

13. Amend § 145.3 by revising the introductory text to read as follows:

§ 145.3 Definition of terms.

For the purposes of subparts A through E, the following definitions apply:

* * * * *

14. Section 145.12 is added to subpart A to read as follows:

§ 145.12 Repair station records: Falsification, reproduction, or alteration.

(a) No person may make or cause to be made:

(1) Any fraudulent or intentionally false entry in any record or report (including any application for a repair station certificate or rating) that is required to be made, kept, or used to show compliance with any requirement under this part;

(2) Any reproduction, for fraudulent purpose, of any record or report (including any application for a repair station certificate or rating) under this part; or

(3) Any alteration, for fraudulent purpose, of any record or report (including any application for a repair station certificate or rating) under this part.

(b) The commission by any person of an act prohibited under paragraph (a) of this section is a basis for suspending or revoking the repair station certificate and any certificate, approval, or authorization issued by the FAA held by that person.

15. Amend § 145.51 by revising paragraphs (a) and (d) to read as follows:

§ 145.51 Application for certificate.

(a) An application for a repair station certificate and rating must be made in accordance with § 145.1051.

* * * * *

(d) An application for an additional rating or amended repair station certificate must be made in accordance with § 145.1051.

16. Amend § 145.53 by revising paragraph (a) to read as follows:

§ 145.53 Issue of certificate.

(a) Except as provided in paragraph (b), (c), or (d) of this section, a person who meets the requirements of subparts A through E of this part is entitled to a repair station certificate with appropriate ratings prescribing such operations specifications and limitations as are necessary in the interest of safety, until [the date 24 months after the effective date of the rule] at which time any certificate issued under the requirements of subparts A through E of this part is no longer valid.

* * * * *

17. Amend § 145.55 by revising paragraphs (a), (b) and (c)(1) to read as follows:

§ 145.55 Duration and renewal of certificate.

(a) A certificate or rating issued to a repair station located in the United States, is effective from the date of issue until the repair station surrenders it or the FAA suspends or revokes it, or [the date 24 months after the effective date of the rule] whichever occurs first.

(b) A certificate or rating issued to a repair station located outside the United States is effective from the date of issue until the last day of the 12th month after the date of issue unless the repair station surrenders the certificate or the FAA suspends or revokes it, but no longer than [the date 24 months after the effective date of the rule]. The FAA may renew the certificate or rating for 24 months, but not beyond [the date 24 months after the effective date of the rule] if the repair station has operated in compliance with the applicable requirements of part 145 within the preceding certificate duration period.

(c) * * *

(1) Submit its request for renewal no later than 30 days before the repair station's current certificate expires. If a request for renewal is not made within this period, the repair station must follow the application procedures in § 145.1051.

* * * * *

18. Amend § 145.57 by revising paragraphs (a) introductory text and (b) to read as follows:

§ 145.57 Amendment to or transfer of certificate.

(a) The holder of a repair station certificate must apply for any voluntary change to its certificate in accordance with § 145.1051. A change to the certificate must include certification in compliance with § 145.53(c) or (d), if not previously submitted. A certificate change is necessary if the certificate holder—

* * * * *

(b) If the holder of a repair station certificate sells or transfers its assets, the new owner must apply for certification in accordance with § 145.1051.

19. Amend § 145.105 by revising paragraph (a) to read as follows:

§ 145.105 Change of location, housing, or facilities.

(a) A certificated repair station that makes any changes to its housing or facilities required by § 145.103 that could have a significant effect on its ability to perform the maintenance, preventive maintenance, or alterations under its repair station certificate and operations specifications must comply with § 145.1051.

* * * * *

20. Amend part 145 by adding new subpart F to read as follows:

Subpart F—General

145.1001 Applicability.
145.1003 Definition of terms.
145.1005 Certificate and operations specifications requirements.
145.1012 Repair station records: Falsification, reproduction, or alteration.

Subpart F—General

§ 145.1001 Applicability.

Subparts F through J of this part:

(a) Describe how to obtain a repair station certificate after [effective date of rule].

(b) Contain the rules a repair station receiving a certificate must follow related to its performance of maintenance, preventive maintenance, and alterations of civil aircraft, airframes, aircraft engines, propellers, appliances, or component parts to which part 43 of this chapter applies.

(c) Apply to any person who holds out as an FAA-certificated repair station.

§ 145.1003 Definition of terms.

For the purposes of subparts F through J of this part, the following definitions apply:

(a) *Accountable manager* means the person designated by the certificated repair station who is responsible for and has the authority over all repair station operations that are conducted under part 145, including ensuring that repair station personnel follow the regulations, and serves as the primary contact with the FAA.

(b) *Article* means an aircraft, airframe, aircraft engine, propeller, appliance, or component part.

(c) *Avionics* are articles generally associated with the processing of digital electrical signals. Examples include: radios, navigation equipment, radar, data processors, and cathode ray tubes.

(d) *Directly in charge* means having the responsibility for the work of a certificated repair station that performs maintenance, preventive maintenance, alterations, or other functions affecting aircraft airworthiness. A person directly in charge does not need to physically observe and direct each worker constantly but must be readily available for consultation on matters requiring instruction or decision from higher authority.

(e) *Line maintenance* means maintenance performed for an air carrier certificated under part 121 or part 135 of this chapter, or a foreign air carrier or foreign person operating a U.S.-registered aircraft in common carriage under part 129 of this chapter, which is generally performed at the ramp, parking area, or gate, and typically will not exceed 24 continuous hours per aircraft.

§ 145.1005 Certificate and operations specifications requirements.

(a) No person may operate as a certificated repair station without, or in violation of, a repair station certificate, rating, or operations specifications issued under this part.

(b) The certificate and operations specifications issued to a certificated repair station must be available on the premises for inspection by the public and the FAA.

§ 145.1012 Repair station records: Falsification, reproduction, or alteration.

(a) No person may make or cause to be made:

(1) Any fraudulent or intentionally false entry in any record or report (including any application for a repair station certificate or rating) that is required to be made, kept, or used to show compliance with any requirement under this part;

(2) Any reproduction, for fraudulent purpose, of any record or report (including any application for a repair station certificate or rating) under this part; or

(3) Any alteration, for fraudulent purpose, of any record or report (including any application for a repair station certificate or rating) under this part.

(b) The commission by any person of an act prohibited under paragraph (a) of this section is a basis for suspending or revoking the repair station certificate and any certificate, approval, or authorization issued by the FAA held by that person.

21. Amend part 145 by adding new subpart G to read as follows:

Subpart G—Certification

145.1051 Application for certificate.
145.1053 Issue of certificate.
145.1055 Duration and renewal of certificate.
145.1056 Amendment to or transfer of certificate.
145.1057 Operations specifications.
145.1058 Amending operations specifications.
145.1059 Ratings.
145.1061 Limitations to ratings.

Subpart G—Certification

§ 145.1051 Application for certificate.

(a) An application for a repair station certificate and rating must be made in a format acceptable to the FAA and must include the following:

(1) For initial applicants, a letter of compliance detailing how the applicant will comply with all sections of this part.

(2) A repair station manual acceptable to the FAA as required by § 145.1207;

(3) A quality control manual acceptable to the FAA as required by § 145.1207 (the repair station and quality control manuals may be contained in the same document if they are clearly identified);

(4) A list that includes each product or article for which the application is made, as defined in the rating system identified in § 145.1059.

(5) An organizational chart of the repair station with the names and titles of managing and supervisory personnel;

(6) The physical address and a description of all the repair station housing and facilities, including any additional fixed locations requested for approval in accordance with § 145.1103(d).

(7) A list of the maintenance functions, for approval by the FAA, to be performed for the repair station under contract by another person under the provisions of § 145.1217; and

(8) A description of the training program for approval by the FAA in accordance with § 145.1163.

(b) The technical data, housing, facilities, equipment, tools, test apparatus, materials, and personnel required for the certificate and rating, or for an additional rating, must be in place for inspection at the time of certification or rating approval by the FAA.

(c) In addition to meeting the other applicable requirements for a repair station certificate and rating, an applicant for a repair station certificate and rating located outside the United States must meet the following requirements:

(1) The applicant must show that the repair station certificate and/or rating is necessary for maintaining or altering the following:

(i) U.S.-registered aircraft or articles for use on U.S.-registered aircraft, or

(ii) Foreign-registered aircraft operated under the provisions of part 121 or part 135 of this chapter, or articles for use on those aircraft.

(2) The applicant must show that the fee prescribed by the FAA has been paid.

(d) An application for an additional rating, amended repair station certificate, or renewal of a repair station certificate must be made in a format acceptable to the FAA. The application should include only that information necessary to substantiate the change or renewal of the certificate.

(e) An application for a repair station certificate may be denied if the FAA finds that:

(1) The applicant holds a repair station certificate in the process of being revoked, or previously held a repair station certificate that was revoked;

(2) The applicant intends to fill or fills a management position with an individual who exercised control over or who held the same or a similar position with a certificate holder whose repair station certificate was revoked, or is in the process of being revoked, and that individual materially contributed to the circumstances causing the revocation or causing the revocation process;

(3) An individual who will hold a management position previously held a management position with a certificate holder whose repair station certificate was revoked, or is in the process of being revoked, and the individual materially contributed to the circumstances causing the revocation or causing the revocation process; or

(4) An individual who will have control over or substantial ownership interest in the applicant had the same or similar control or interest in a certificate holder whose repair station certificate was revoked, or is in the process of being revoked, and that individual materially contributed to the circumstances causing the revocation or causing the revocation process.

§ 145.1053 Issue of certificate.

(a) A person who meets the requirements of this part is eligible to be issued a repair station certificate with appropriate ratings prescribing such operations specifications and limitations as are necessary in the interest of safety.

(b) If the person is located in a country with which the United States has a bilateral aviation safety agreement, the FAA may find that the person meets the requirements of this part based on a certification from the civil aviation authority of that country or an authority acceptable to the FAA. This certification must be made in accordance with implementation procedures signed by the FAA or the FAA's designee.

(c) Before an air agency certificate can be issued for a repair station that is located within the United States, the applicant shall certify in writing that all hazmat employees (as defined in 49 CFR 171.8) for the repair station, its contractors, or subcontractors are trained as required in 49 CFR part 172, subpart H.

(d) Before an air agency certificate can be issued for a repair station located outside the United States, the applicant shall certify in writing that all employees for the repair station, its contractors, or subcontractors performing a job function concerning the transport of dangerous goods

(hazardous material) are trained as outlined in the most current edition of the International Civil Aviation Organization Technical Instructions for the Safe Transport of Dangerous Goods by Air.

§ 145.1055 Duration and renewal of certificate.

(a) A certificate or rating issued to a repair station located in the United States is effective from the date of issue until the repair station surrenders the certificate and the FAA accepts it for cancellation, or the FAA suspends or revokes it.

(b) A certificate or rating issued to a repair station located outside the United States is effective from the date of issue until the last day of the 12th month after the date of issue unless the repair station surrenders the certificate and the FAA accepts it for cancellation, or the FAA suspends or revokes it. The FAA may renew the certificate or rating for 24 months if the repair station has operated in compliance with the applicable requirements of part 145 within the preceding certificate duration period.

(c) A certificated repair station located outside the United States that applies for a renewal of its repair station certificate must—

(1) Submit its request for renewal no later than 30 days before the repair station's current certificate expires. If a request for renewal is not made within this period, the repair station must follow the application procedures in § 145.1051;

(2) Send its request for renewal to the FAA office that has jurisdiction over the certificated repair station; and

(3) Show that the fee prescribed by the FAA has been paid.

(d) The holder of an expired, surrendered, suspended, or revoked certificate must return it to the FAA.

§ 145.1056 Amendment to or transfer of certificate.

(a) An application to amend a repair station certificate must be made to the certificate-holding district office in a form and manner acceptable to the FAA. The request must meet the certification requirements of § 145.1051(d) and the statement required by § 145.1053(c) or (d) must be included, if not previously submitted.

(b) The certificate holder must file the application made under paragraph (a) of this section with the certificate holding district office at least 15 days before the date proposed by the applicant for the amendment to become effective, unless the FAA accepts filing within a shorter period.

(c) A certificate amendment is necessary if the certificate holder changes the location of the repair station or requests to add or amend a rating.

(d) If the holder of a repair station certificate sells or transfers its assets, the new owner must apply for an amended certificate in accordance with § 145.1051.

§ 145.1057 Operations specifications.

(a) Except for operations specifications paragraphs specifying ratings and limitations to those ratings, operations specifications are not part of a certificate.

(b) Operations specifications issued under this part are effective as long as the repair station certificate is valid.

(c) The operations specifications issued to a repair station must be available at the repair station for inspection by the public and the FAA at the address required by paragraph (d)(1) of this section.

(d) Each certificate holder's operations specifications must contain—

(1) The physical address of the certificate holder's fixed location for operation of the repair station. The address shall also serve as the address for mailed paper correspondence between the FAA and the certificate holder;

(2) The ratings held and any limitations to those ratings;

(3) Any special authorizations and limitations for the conduct of repair station operations;

(4) Any exemption granted by the FAA to the repair station; and

(5) Any other information the FAA determines is necessary.

(e) If the optional capability list provided for in § 145.1215 is not used, each certificate holder's operations specifications must, within the rating categories authorized under § 145.1059, identify each airframe, powerplant, or propeller by manufacturer, model, and series as applicable. For a Component rating, the operations specifications must identify each component or appliance included in the rating by manufacturer, manufacturer-designated nomenclature, and basic part number. For a Specialized Service rating, the operations specifications must identify each specific and unique maintenance function and the FAA acceptable specification associated with each function.

§ 145.1058 Amending operations specifications.

(a) The FAA may amend any operations specifications issued under this part if—

(1) The operations specification was issued erroneously;

(2) The FAA revises the operations specifications template;

(3) The FAA determines that safety in air commerce and the public interest require the amendment; or

(4) The certificate holder applies for the amendment and the FAA determines that safety in air commerce and the public interest allows the amendment.

(b) Except for an amendment involving a rating or a limitation to a rating, which would be considered a certificate action, and except as provided in paragraph (e) of this section for other amendments in which the certificate-holding district office finds that an emergency exists requiring immediate action, when the FAA initiates an amendment to a certificate holder's operations specifications, the following procedure applies:

(1) The certificate-holding district office notifies the certificate holder in writing of the proposed amendment.

(2) The certificate-holding district office sets a reasonable period (but not less than 7 days) within which the certificate holder may submit written information, views, and arguments on the amendment.

(3) After considering the material presented, the certificate-holding district office notifies the certificate holder of—

(i) The adoption of the proposed amendment;

(ii) The partial adoption of the proposed amendment; or

(iii) The withdrawal of the proposed amendment.

(4) If the certificate-holding district office issues an amendment to the operations specifications, it becomes effective not less than 30 days after the certificate holder receives notice of it unless—

(i) The certificate-holding district office finds under paragraph (e) of this section that an emergency exists requiring immediate action with respect to safety in air commerce; or

(ii) The certificate holder petitions for reconsideration of the amendment under paragraph (d) of this section.

(c) If the certificate holder applies for an amendment to its operations specifications, the following procedure applies:

(1) The certificate holder must file an application to amend its operations specifications at least 15 days before the date proposed by the applicant for the amendment to become effective;

(2) The application must be submitted to the certificate-holding district office in a form and manner prescribed by the FAA.

(3) After considering the material presented, the certificate-holding district office notifies the certificate holder of—

(i) The adoption of the applied-for amendment;

(ii) The partial adoption of the applied-for amendment; or

(iii) The denial of the applied-for amendment. The certificate holder may petition for reconsideration of a denial under paragraph (d) of this section.

(4) If the certificate-holding district office approves the amendment following coordination with the certificate holder regarding its implementation, the amendment is effective on the date the FAA approves it.

(d) When a certificate holder seeks reconsideration of a decision from the certificate-holding district office concerning the amendment of operations specifications, the following procedure applies:

(1) The certificate holder must petition for reconsideration of that decision within 30 days of the date that the certificate holder receives a notice of denial of the amendment to its operations specifications, or of the date it receives notice of an FAA-initiated amendment to its operations specifications, whichever circumstance applies.

(2) The certificate holder must address its petition to the applicable Flight Standards Regional Division Manager.

(3) A petition for reconsideration, if filed within the 30-day period, suspends the effectiveness of any amendment issued by the certificate-holding district office unless the certificate-holding district office has found, under paragraph (e) of this section, that an emergency exists requiring immediate action with respect to safety in air transportation or air commerce, in which case the amendment remains in effect during the appeal.

(e) If the certificate-holding district office finds that an emergency exists requiring immediate action with respect to safety in air commerce that makes the procedures set out in paragraph (d) of this section impracticable or contrary to the public interest:

(1) The certificate-holding district office amends the operations specifications and makes the amendment effective on the day the certificate holder receives notice of it.

(2) In the notice to the certificate holder, the certificate-holding district office articulates the reasons for its finding that an emergency exists requiring immediate action with respect to safety in air commerce that makes it impracticable or contrary to the public interest to stay the effectiveness of the amendment.

§ 145.1059 Ratings.

(a) Airframe rating. The following categories are authorized under the airframe rating:

(1) Category 1: Aircraft certificated under parts 23 and 27.

(2) Category 2: Aircraft certificated under parts 25 and 29.

(3) Category 3: All other aircraft.

(i) A certificated repair station with an Airframe rating may perform maintenance, preventive maintenance, and alterations on airframes under the provisions listed on its operations specifications;

(ii) A certificated repair station with an Airframe rating shall not perform maintenance, preventive maintenance, or alterations on those articles for which a Powerplant or Propeller rating is required, unless the repair station possesses the appropriate rating; and

(iii) A certificated repair station with an Airframe rating is not required to obtain a separate Component rating to maintain articles associated with its rating and capabilities.

(b) Powerplant rating. The following categories are authorized under the Powerplant rating:

(1) Category 1: Reciprocating engines.

(2) Category 2: Turbine engines.

(3) Category 3: Auxiliary Power Units (APU).

(4) Category 4: All other powerplants.

(i) A certificated repair station with a Powerplant rating may perform maintenance, preventive maintenance, and alterations on powerplants and auxiliary power units under the provisions listed on its operations specifications;

(ii) A certificated repair station with a Powerplant rating shall not perform maintenance, preventive maintenance, or alterations on those articles for which an Airframe or Propeller rating is required, unless the repair station possesses the appropriate rating; and

(iii) A certificated repair station with a Powerplant rating is not required to obtain a separate Component rating to maintain articles associated with its rating and capabilities.

(c) Propeller rating. The following categories are authorized under the Propeller rating:

(1) Category 1: Fixed-pitch and ground-adjustable pitch propellers.

(2) Category 2: Variable-pitch propellers.

(3) Category 3: All other propellers.

(i) A certificated repair station with a Propeller rating may perform maintenance, preventive maintenance, and alterations on propellers under the provisions listed on its operations specifications;

(ii) A certificated repair station with a Propeller rating shall not perform maintenance, preventive maintenance, or alterations on those articles for which an Airframe or Powerplant rating is required, unless the repair station possesses the appropriate rating; and

(iii) A certificated repair station with a Propeller rating is not required to obtain a separate Component rating to maintain articles associated with its rating and capabilities.

(d) Component rating.

(1) A certificated repair station with a Component rating may perform maintenance, preventive maintenance, and alterations on appliances and components that are not installed on an airframe, powerplant, or propeller under the provisions listed on its operations specifications.

(2) A certificated repair station with a Component rating must have an Airframe, Powerplant, or Propeller rating with limitations in accordance with § 145.1061 to install articles on those products.

(e) Specialized Service rating.

(1) The FAA may issue a Specialized Service rating to a certificated repair station that performs a specific and unique maintenance function.

(2) The maintenance function must be performed in accordance with an FAA-acceptable specification.

(3) The repair station's operations specifications must contain the specification used to perform the maintenance function. The specification may be:

(i) A current industry or military specification acceptable to the FAA or,

(ii) A specification developed by the applicant and approved by the FAA.

(4) A certificated repair station may, under its Specialized Service rating, perform only the maintenance functions that are listed on the repair station's operations specifications.

(5) A certificated repair station with a Specialized Service rating shall not contract out any maintenance function associated with that rating.

§ 145.1061 Limitations to ratings.

(a) The FAA may issue limitations to the ratings of a certificated repair station for a particular type of airframe, powerplant, propeller, component, or specialized service that is listed on the repair station's operations specifications.

(b) The repair station's operations specifications will identify the rating in § 145.1059 to which the limitations apply.

(c) Limitations to any rating in § 145.1059 may be issued as deemed appropriate by the FAA, including, but not limited to, line maintenance.

22. Amend part 145 by adding new subpart H to read as follows:

Subpart H— Technical Data, Housing, Facilities, Equipment, and Materials

145.1101 General.
145.1103 Housing and facilities requirements.
145.1105 Change of location, housing, or facilities.
145.1107 Satellite repair stations.
145.1109 Technical data, equipment, tools, test apparatus, and materials requirements.

Subpart H—Technical Data, Housing, Facilities, Equipment, and Materials

§ 145.1101 General.

A certificated repair station must provide the technical data, housing, facilities, equipment, tools, test apparatus, and materials that meet the applicable requirements for the issuance of the certificate and any rating the repair station holds.

§ 145.1103 Housing and facilities requirements.

(a) Each certificated repair station must provide and maintain—

(1) Suitable permanent housing for the facilities, equipment, materials, and personnel consistent with its ratings.

(2) Facilities for properly performing the maintenance, preventive maintenance, and alterations of articles for which it is rated. Facilities must include the following:

(i) Sufficient work space and areas for the proper segregation and protection of articles during all maintenance, preventive maintenance, and alterations;

(ii) Segregated work areas enabling environmentally hazardous or sensitive operations such as painting, cleaning, welding, avionics work, electronic work, and machining to be done properly and in a manner that does not adversely affect other maintenance or alterations of articles or activities;

(iii) Suitable racks, hoists, trays, stands, and other segregation means for the storage and protection of all articles undergoing maintenance, preventive maintenance, or alterations;

(iv) Space sufficient to segregate and protect articles and materials stocked for installation from those articles undergoing maintenance, preventive maintenance, or alterations; and

(v) Ventilation, lighting, and control of temperature, humidity, and other climatic conditions sufficient to ensure personnel perform maintenance, preventive maintenance, and alterations to the standards required by this part.

(b) A certificated repair station with an airframe rating must provide and maintain suitable permanent housing with the ability to enclose the largest type and model of aircraft for which it is rated. Notwithstanding this requirement for suitable permanent housing, the FAA may determine that a repair station with limitations to its airframe rating does not need to have housing to enclose an entire aircraft if the FAA determines that adequate environmental protection is provided by the repair station consistent with the limitations issued in accordance with § 145.1061.

(c) A certificated repair station may perform maintenance, preventive maintenance, and alterations on articles outside of its housing if it provides suitable facilities that are acceptable to the FAA and meet the requirements of § 145.1103(a) so the work can be performed in accordance with the requirements of part 43 of this chapter.

(d) A certificated repair station may continually perform maintenance, preventive maintenance, and alterations on any article for which it is rated at additional fixed locations if the following requirements are met:

(1) The repair station applies for and receives approval of additional fixed locations.

(2) For a repair station located within the United States, the additional fixed location is within the geographical boundaries of the Certificate Holding District Office.

(3) For a repair station located outside of the United States, the additional fixed location is within close proximity of the certificated repair station, as determined by the FAA.

(4) The location is permanently affixed and is under the managerial control and authority of the repair station.

(5) The maintenance functions performed at the additional fixed locations are in support of and within the scope of the ratings listed on the repair station's operations specifications.

§ 145.1105 Change of location, housing, or facilities.

(a) A certificated repair station shall not change the location of its housing without written approval from the FAA.

(b) A certificated repair station shall not make any changes to its housing or facilities required by § 145.1103 that could have a significant effect on its ability to perform the maintenance, preventive maintenance, or alterations under its repair station certificate and operations specifications without written approval from the FAA.

(c) The FAA may prescribe the conditions, including any limitations, under which a certificated repair station must operate while it is changing its location, housing, or facilities.

§ 145.1107 Satellite repair stations.

(a) A certificated repair station under the managerial control of another certificated repair station may operate as a satellite repair station with its own certificate issued by the FAA. Each satellite repair station must:

(1) Meet the requirements for each rating it holds

(2) Submit to its certificate holding district office the same manuals as the repair station that exercises managerial control. Each manual must identify any specific processes or procedures either unique to the satellite repair station or applicable only to the repair station with managerial control.

(3) Submit to its certificate holding district office the same training program for approval as the repair station that exercises managerial control. The program must identify any specific processes or procedures either unique to the satellite repair station or applicable only to the repair station with managerial control.

(4) Be able to demonstrate compliance with its manual.

(5) Meet the housing and facility requirements of § 145.1103.

(6) Have its own housing and facilities in a location with a physical address other than the repair station with managerial control.

(b) Unless the FAA indicates otherwise, personnel and equipment from a certificated repair station with managerial control and from each of its satellite repair stations may be shared. However, inspection personnel must be designated for each satellite repair station and available at the satellite repair station any time a determination of airworthiness or approval for return to service is made. At other times, inspection personnel may be away from the premises but must be available by telephone, radio, or other electronic means.

(c) A satellite repair station may not be located in a country other than the domicile country of the certificated repair station with managerial control.

§ 145.1109 Technical data, equipment, tools, test apparatus, and materials requirements.

(a) Except as otherwise prescribed by the FAA, a certificated repair station must have and maintain the equipment, tools, test apparatus, materials, and, in

a format acceptable to the FAA, the technical data necessary to perform the maintenance, preventive maintenance, or alterations under its repair station certificate and operations specifications in accordance with part 43 of this chapter.

(b) Notwithstanding the requirement in paragraph (a) of this section for a repair station to have the necessary equipment, tools, and test apparatus, that requirement may be met for specialized and rarely used equipment, tools, and test apparatus if the repair station can demonstrate to the FAA it has made arrangements with another person to make those items available to the repair station at any time their use is required.

(c) A certificated repair station must ensure that all test and inspection equipment and tools used to make airworthiness determinations on articles are calibrated to a standard acceptable to the FAA.

23. Amend part 145 by adding new subpart I to read as follows:

Subpart I—Personnel

145.1151 Personnel requirements.
145.1153 Supervisory personnel requirements.
145.1155 Inspection personnel requirements.
145.1157 Personnel authorized to approve an article for return to service.
145.1159 Recommendation of a person for certification as a repairman.
145.1161 Records of management, supervisory, and inspection personnel.
145.1163 Training requirements.
145.1165 Hazardous materials training.

Subpart Personnel

§ 145.1151 Personnel requirements.

Each certificated repair station must—

(a) Designate a repair station employee as the accountable manager;

(b) Provide qualified personnel to plan, supervise, perform, and approve for return to service the maintenance, preventive maintenance, or alterations performed under the repair station certificate and operations specifications;

(c) Ensure it has a sufficient number of employees with the training or knowledge and experience in the performance of maintenance, preventive maintenance, or alterations authorized by the repair station certificate and operations specifications to ensure all work, including work contracted to a noncertificated person in accordance with § 145.1217(b), is performed in accordance with part 43 of this chapter; and

(d) Determine the abilities of its employees performing maintenance functions based on training, knowledge, experience, or practical tests.

§ 145.1153 Supervisory personnel requirements.

(a) A certificated repair station must ensure it has a sufficient number of supervisors to direct the work performed under the repair station certificate and operations specifications. The supervisors must be present to oversee the work performed.

(b) Each supervisor must—

(1) If employed by a repair station located inside the United States, be appropriately certificated under part 65 of this chapter for the work being supervised.

(2) If employed by a repair station located outside the United States-

(i) Meet the requirements of paragraph (b)(1) of this section; or

(ii) Meet the eligibility requirements of § 65.101(a)(1), (2), (3) and (5) of this chapter.

(c) A certificated repair station must ensure its supervisors understand, speak, read, and write English.

§ 145.1155 Inspection personnel requirements.

(a) A certificated repair station must ensure that persons performing inspections under the repair station certificate and operations specifications are—

(1) Thoroughly familiar with the applicable regulations in this chapter and with the inspection methods, techniques, practices, aids, equipment, and tools used to determine the airworthiness of the article on which maintenance, preventive maintenance, or alterations are being performed; and

(2) Proficient in using the various types of inspection equipment and visual inspection aids appropriate for the article being inspected.

(b) A certificated repair station must ensure its inspectors understand, speak, read, and write English.

(c) A certificated repair station must ensure that an inspector is available at the article while performing inspections.

§ 145.1157 Personnel authorized to approve an article for return to service.

(a) Each person authorized to approve an article for return to service must be thoroughly familiar with the applicable regulations in this chapter and proficient in the use of the various applicable inspection methods, techniques, and practices.

(b) A certificated repair station located inside the United States must ensure that each person authorized to approve an article for return to service is appropriately certificated under part 65 of this chapter for the work approved.

(c) A certificated repair station located outside the United States must ensure that each person authorized to approve an article for return to service:

(1) Is certificated as required by paragraph (b) of this section, or;

(2) Meets the eligibility requirements of § 65.101(a) (1), (2), (3) and (5) of this chapter.

(d) A certificated repair station must ensure that each person authorized to approve an article for return to service understands, speaks, reads, and writes English.

(e) A certificated repair station must ensure that a person authorized to approve an article for return to service is available to inspect the article any time such approval is made.

§ 145.1159 Recommendation of a person for certification as a repairman.

A certificated repair station that chooses to use repairmen to meet the applicable personnel requirements of this part must certify in a format acceptable to the FAA that each person recommended for certification as a repairman—

(a) Is employed by the repair station, and

(b) Meets the eligibility requirements of § 65.101 of this chapter.

§ 145.1161 Records of management, supervisory, and inspection personnel.

(a) A certificated repair station must maintain and make available in a format acceptable to the FAA the following:

(1) A roster of management and supervisory personnel that includes the names of the repair station officials who are responsible for its management and the names of its supervisors who oversee maintenance functions.

(2) A roster with the names of all inspection personnel.

(3) A roster of personnel authorized to approve for return to service a maintained or altered article.

(4) A summary of the employment history of each individual whose name is on the personnel rosters required by paragraphs (a)(1) through (a)(3) of this section. The summary must contain enough information on each individual listed on the roster to show compliance with the experience requirements of this part and must include the following:

(i) Present title,

(ii) Total years of experience and the type of maintenance work performed,

(iii) Past relevant employment with names of employers and periods of employment, positions, and types of maintenance performed,

(iv) Scope of present employment, and

(v) The type of mechanic or repairman certificate held and the ratings on that certificate, if applicable.

(b) Within 5 business days of the change, the rosters required by this section must reflect changes caused by termination, reassignment, change in duties or scope of assignment, or addition of personnel.

§ 145.1163 Training requirements.

(a) A certificated repair station must have an employee training program approved by the FAA that consists of initial and recurrent training.

(b) The training program must ensure that each employee assigned to perform maintenance, preventive maintenance, alterations, or inspection functions is—

(1) Capable of performing the assigned task;

(2) Trained in human factors relevant to aviation maintenance;

(3) Trained in the Federal Aviation Regulations as they relate to Part 145; and

(4) Trained in the repair station's manuals, quality control program, procedures, and forms.

(c) A certificated repair station must document, in a format acceptable to the FAA, the individual employee training required under this section. These records must be retained for a minimum of 2 years.

(d) A certificated repair station must submit training program revisions to its certificate holding district office in accordance with the procedures in the repair station manual as required by § 145.1209(e)(2).

§ 145.1165 Hazardous materials training.

(a) Each repair station that meets the definition of a hazmat employer under 49 CFR 171.8 must have a hazardous materials training program that meets the training requirements of 49 CFR part 172, subpart H.

(b) A repair station employee shall not perform or directly supervise a job function listed in § 121.1001 or § 135.501 of this chapter for, or on behalf of the part 121 or 135 operator, including loading of items for transport on an aircraft operated by a part 121 or part 135 certificate holder, unless that person has received training in accordance with the part 121 or part 135 operator's FAA-approved hazardous materials training program.

24. Amend part 145 by adding new subpart J to read as follows:

Subpart J—Operating Rules

145.1201 Privileges and limitations of certificate.
145.1203 Work performed at another location.
145.1205 Maintenance, preventive maintenance, and alterations performed for certificate holders under parts 121, 125, and 135, and for foreign air carriers or foreign persons operating a U.S.-registered aircraft in common carriage under part 129.
145.1206 Notification of hazardous materials authorizations.
145.1207 Repair station and quality control manuals.
145.1209 Repair station manual contents.
145.1211 Quality control system.
145.1213 Inspection of maintenance, preventive maintenance, or alterations.
145.1215 Capability list
145.1217 Contract maintenance.
145.1219 Recordkeeping.
145.1221 Service difficulty reports.
145.1223 FAA inspections.

Subpart J—Operating Rules

§ 145.1201 Privileges and limitations of certificate.

(a) A certificated repair station may—

(1) Perform maintenance, preventive maintenance, or alterations in accordance with part 43 of this chapter on any article for which it is rated and within the limitations in its operations specifications.

(2) In accordance with § 145.1217, arrange for another person to perform maintenance, preventive maintenance, or alterations of any article for which it is rated.

(3) Approve for return to service any article for which it is rated after it has performed maintenance, preventive maintenance, or an alteration in accordance with part 43 of this chapter.

(b) A certificated repair station shall not approve for return to service under part 43 of this chapter—

(1) Any article for which it is not rated;

(2) Any article for which it is rated if it requires special technical data, equipment, or facilities that are not available to it;

(3) Any article unless the maintenance, preventive maintenance, or alteration was performed in accordance with the applicable approved technical data or data acceptable to the FAA, and using methods, techniques, and practices acceptable to the FAA.

(4) Any article after a major repair or major alteration unless the major repair or major alteration was performed in accordance with applicable approved technical data; or

(5) Any experimental aircraft after a major repair or major alteration performed under § 43.1(b) of this chapter unless the major repair or major alteration was performed in accordance with methods and applicable technical data acceptable to the FAA.

§ 145.1203 Work performed at another location.

A certificated repair station may temporarily transport material, equipment, and personnel needed to perform maintenance, preventive maintenance, or alterations on an article for which it is rated to a place other than the repair station's fixed location if the following requirements are met:

(a) The work is necessary due to a special circumstance, as determined by the FAA, or

(b) It is authorized by the FAA to perform such work on a recurring basis, and the repair station's manual includes the procedures for accomplishing maintenance, preventive maintenance, or alterations at a place other than the repair station's fixed location.

§ 145.1205 Maintenance, preventive maintenance, and alterations performed for certificate holders under parts 121, 125, and 135, and for foreign air carriers or foreign persons operating U.S.-registered aircraft in common carriage under part 129.

(a) A certificated repair station that performs maintenance, preventive maintenance, or alterations for an air carrier or air operator under parts 121 or 135 of this chapter, or for a foreign air carrier or foreign person operating U.S.-registered aircraft in common carriage under part 129 of this chapter, shall perform that work in accordance with the instructions provided by that air carrier, air operator, or foreign air carrier or foreign person.

(b) A certificated repair station that performs inspections on an aircraft that is subject to an inspection program under § 91.409(e) or parts 125 or 135 of this chapter shall do that work in accordance with the inspection program provided by the operator of that aircraft.

§ 145.1206 Notification of hazardous materials authorizations.

(a) Each repair station must acknowledge receipt of the part 121 or part 135 operator notification required under §§ 121.1005(e) and 135.505(e) of this chapter prior to performing work for, or on behalf of, that certificate holder.

(b) Prior to performing work for or on behalf of a part 121 or part 135 operator, each repair station must notify its employees, contractors, or subcontractors that handle or replace aircraft components or other items regulated by 49 CFR parts 171 through 180 of each certificate holder's operations specifications authorization permitting, or prohibition against, carrying hazardous materials. This notification must be provided subsequent to the notification by the part 121 or part 135 operator of such

operations specifications authorization/designation.

§ 145.1207 Repair station and quality control manuals.

A certificated repair station must:

(a) Prepare and follow repair station and quality control manuals acceptable to the FAA;

(b) Maintain current repair station and quality control manuals;

(c) Ensure the manuals required by this section are accessible for use by repair station personnel;

(d) Provide to its certificate holding district office the current manuals in a format acceptable to the FAA; and

(e) Notify its certificate holding district office of each revision to its manuals in accordance with the procedures required by §§ 145.1209(e)(7) and 145.1211(c)(3).

§ 145.1209 Repair station manual contents.

A certificated repair station's manual must include at least the following:

(a) An organizational chart identifying—

(1) Each management position with authority to act on behalf of the repair station;

(2) The area of responsibility assigned to each management position; and

(3) The duties, responsibilities, and authority of each management position.

(b) A description of the certificated repair station's operations, including the technical data, housing, facilities, equipment, and materials as required by this part;

(c) A description of—

(1) The required records and the recordkeeping system used to obtain, store, and retrieve the required records; and

(2) The system used to identify and control sections of the repair station manual.

(d) Procedures for revising the capabilities list if used, including—

(1) Submitting the revisions to the certificate holding district office for approval; or

(2) The self-evaluation permitted under § 145.1215(d)(2) for making changes to the capability list, including—

(i) Determining that the repair station has all of the technical data, housing, facilities, equipment, material, processes, and trained personnel in place;

(ii) Methods and frequency of such evaluations, including procedures for reporting the results to the appropriate repair station manager for review and action;

(iii) Notifying the certificate holding district office of changes to the list, including how often the certificate holding district office will be notified of changes; and

(iv) Documenting the self evaluation and periodic review, including making such documentation available to the FAA, and retaining it for a period of 2 years.

(e) Procedures for—

(1) Maintaining and revising the rosters required by § 145.1161;

(2) Revising the training program required by § 145.1163 and submitting revisions to the certificate holding district office for approval;

(3) Governing work performed at another location in accordance with § 145.1203;

(4) Performing maintenance, preventive maintenance, or alterations under § 145.1205;

(5) Maintaining and revising a list of the maintenance functions approved by the FAA that may be performed under contract by another person in accordance with § 145.1217(a)(1), including submitting revisions to the certificate holding district office for approval;

(6) Maintaining and revising the contract maintenance information required by § 145.1217(a)(2) including how and when the certificate holding district office is notified of revisions; and

(7) Revising the repair station's manual and notifying its certificate holding district office of revisions to the manual, including how often the certificate holding district office will be notified of revisions.

§ 145.1211 Quality control system.

(a) A certificated repair station must establish and maintain a quality control system acceptable to the FAA that ensures the airworthiness of the articles on which the repair station or any of its contractors performs maintenance, preventive maintenance, or alterations.

(b) Repair station personnel must follow the quality control system when performing maintenance, preventive maintenance, or alterations under the repair station certificate and operations specifications.

(c) The quality control manual must include at least the following:

(1) A description of the quality control system and procedures used for—

(i) Inspecting incoming materials to ensure acceptable quality;

(ii) Performing preliminary inspection of all articles that are maintained;

(iii) Inspecting all articles that have been involved in an accident for hidden damage before maintenance, preventive maintenance, or alteration is performed;

(iv) Establishing and maintaining proficiency of inspection personnel; (v) Establishing and maintaining current technical data for maintaining articles;

(vi) Qualifying and surveilling noncertificated persons who perform maintenance, preventive maintenance, or alterations for the repair station in accordance with 145.1217;

(vii) Performing final inspection and approval for return to service of maintained articles; (viii) Calibrating measuring and test equipment used in maintaining articles, including the intervals at which the equipment will be calibrated;

(ix) Taking corrective action on deficiencies;

(x) Identifying and managing suspected unapproved parts; and

(xi) Ensuring that maintenance not completed as a result of shift change or similar interruption is properly completed.

(2) A sample of the inspection and maintenance forms and instructions for completing such forms or a reference to a separate forms manual; and

(3) Procedures for revising the quality control manual required under this section and notifying the certificate holding district office of the revisions, including how often the certificate holding district office will be notified of revisions.

§ 145.1213 Inspection of maintenance, preventive maintenance, or alterations.

(a) A certificated repair station must inspect each article upon which it has performed maintenance, preventive maintenance, or alterations as described in paragraphs (b) and (c) of this section before approving that article for return to service.

(b) A certificated repair station must certify that the article is airworthy with respect to the maintenance, preventive maintenance, or alterations performed after—

(1) The repair station performs work on the article; and

(2) An inspector inspects the article on which the repair station has performed work and determines it to be airworthy with respect to the work performed.

(c) For the purposes of paragraphs (a) and (b) of this section, an inspector must meet the requirements of § 145.1155

§ 145.1215 Capability list.

(a) A certificated repair station may establish and maintain, in a format acceptable to the FAA, a capability list that includes all the articles for which it is rated to perform maintenance, preventive maintenance, or alterations.

(b) An article may be listed on the capability list only if it is within the scope of the repair station's ratings and operations specifications.

(c) Within the rating categories identified in § 145.1059, the capability list must identify each airframe, powerplant, or propeller by manufacturer, model, and series as applicable. For a component rating, the list must identify each component for which the repair station is rated by manufacturer, manufacturer-designated nomenclature, and basic part number.

(d) Changes may be made to the capabilities list:

(1) By submitting a request to the FAA for approval; or

(2) Upon application, as prescribed in § 145.1058, the repair station may request authorization in its operations specifications to make additions to the capabilities list through self-evaluation. The self-evaluation must be documented and include a determination that the repair station has all of the technical data, housing, facilities, equipment, material, processes, and trained personnel in place to perform maintenance, preventive maintenance, or alterations on the article in accordance with this part.

(e) Following changes to its capabilities list, the repair station must provide its certificate holding district office with a copy of the revised list in accordance with the procedures required in § 145.1209(d).

(f) A periodic review of the capability list must be accomplished at least every 2 years to determine if it is current. Following the periodic review, the capability list shall be revised to remove those articles for which the repair station no longer has the technical data, housing, facilities, equipment, material, processes, or trained personnel necessary to perform maintenance or alterations on the article.

§ 145.1217 Contract maintenance.

(a) A certificated repair station may contract a maintenance function pertaining to an article to another person provided—

(1) The maintenance function to be contracted is approved by the FAA; and

(2) The repair station maintains and makes available to its certificate holding district office, in a format acceptable to the FAA, the following information:

(i) The name of each person with whom the repair station contracts maintenance functions;

(ii) The type of certificate and ratings, if any, held by each person to whom the repair station contracts a maintenance function; and

(iii) The maintenance function(s) contracted to each person.

(b) If a maintenance function is contracted under paragraph (a) of this section to a person not certificated to perform the work, the repair station must:

(1) Determine, in accordance with the procedures required under § 145.1211(c)(1)(vi), that the noncertificated person follows a quality control system equivalent to the system followed by the certificated repair station;

(2) Remain directly in charge of the work performed by the noncertificated person;

(3) Verify, by test and/or inspection, that the work has been performed satisfactorily and that the article is airworthy before approving it for return to service; and

(4) Ensure the repair station employee requirements of § 145.1151(c) are met when accomplishing the requirements of paragraphs (b)(1) and (b)(3) of this section.

(c) A certificated repair station may not exercise the privileges of its certificate by providing only approval for return to service of an article following contracting of maintenance, preventive maintenance, or alterations.

§ 145.1219 Recordkeeping.

(a) A certificated repair station must retain records in English that demonstrate compliance with the requirements of part 43 of this chapter. The records must be retained in a format acceptable to the FAA.

(b) A certificated repair station must provide a copy of the approval for return to service in accordance with § 43.5 of this chapter to the owner or operator of the article on which maintenance, preventive maintenance, or alteration was performed.

(c) A certificated repair station must retain the records required by this section for at least 2 years from the date the article was approved for return to service.

(d) A certificated repair station must make all required records available for inspection by the FAA and the National Transportation Safety Board.

§ 145.1221 Service difficulty reports.

(a) A certificated repair station must report to the FAA discovery of any serious failure, malfunction, or defect of an article in a format acceptable to the FAA. The report must be submitted within 96 hours of approving the article for return to service.

(b) The report required under paragraph (a) of this section must include as much of the following information as is available:

(1) Aircraft registration number;

(2) Type, make, and model of the article;

(3) Date of the discovery of the failure, malfunction, or defect;

(4) Nature of the failure, malfunction, or defect;

(5) Time since last overhaul, if applicable;

(6) Apparent cause of the failure, malfunction, or defect; and

(7) Other pertinent information that is necessary for more complete identification, determination of seriousness, or corrective action.

(c) The holder of a repair station certificate that is also the holder of a part 121, 125, or 135 certificate; type certificate (including a supplemental type certificate); parts manufacturer approval; or technical standard order authorization, or that is the licensee of a type certificate holder, does not need to report a failure, malfunction, or defect under this section if the failure, malfunction, or defect has been reported under parts 21, 121, 125, or 135 of this chapter.

(d) A certificated repair station may submit a service difficulty report for the following:

(1) A part 121 certificate holder, provided the report meets the requirements of part 121 of this chapter, as appropriate.

(2) A part 125 certificate holder, provided the report meets the requirements of part 125 of this chapter, as appropriate.

(3) A part 135 certificate holder, provided the report meets the requirements of part 135 of the chapter, as appropriate.

(e) A certificated repair station authorized to report a failure, malfunction, or defect under paragraph (d) of this section must not report the same failure, malfunction, or defect under paragraph (a) of this section. A copy of the report submitted under paragraph (d) of this section must be forwarded to the certificate holder.

§ 145.1223 FAA inspections.

(a) A certificated repair station must allow the FAA to inspect that repair station at any time to determine compliance with this chapter.

(b) A certificated repair station may not contract for the performance of a maintenance function on an article with a noncertificated person unless it provides in its contract with the noncertificated person that the FAA may make an inspection and observe the performance of the noncertificated person's work on the article.

(c) A certificated repair station may not approve for return to service any

article on which a maintenance function was performed by a noncertificated person if the noncertificated person does not permit the FAA to make the inspection described in paragraph (b) of this section.

Subparts A through E [Removed and Reserved]

25. On [24 months after publication of final rule], remove and reserve subparts A through E.

Issued in Washington, DC, on May 3, 2012.

Raymond Towles,

Acting Director, Flight Standards Service.

[FR Doc. 2012–11984 Filed 5–18–12; 8:45 am]

BILLING CODE 4910–13–P

FEDERAL REGISTER

Vol. 77 Monday,

No. 98 May 21, 2012

Part III

Environmental Protection Agency

40 CFR Parts 50, 51 and 81

Air Quality Designations for the 2008 Ozone National Ambient Air Quality Standards; Implementation of the 2008 National Ambient Air Quality Standards for Ozone: Nonattainment Area Classifications Approach, Attainment Deadlines and Revocation of the 1997 Ozone Standards for Transportation Conformity Purposes; Final Rules

ENVIRONMENTAL PROTECTION AGENCY

40 CFR Part 81

[EPA–HQ–OAR–2008–0476; FRL–9668–2]

RIN 2060–AP37

Air Quality Designations for the 2008 Ozone National Ambient Air Quality Standards

AGENCY: Environmental Protection Agency (EPA).

ACTION: Final rule.

SUMMARY: This rule establishes initial air quality designations for most areas in the United States, including areas of Indian country, for the 2008 primary and secondary national ambient air quality standards (NAAQS) for ozone. The designations for several counties in Illinois, Indiana, and Wisconsin that the EPA is considering for inclusion in the Chicago nonattainment area will be designated in a subsequent action, no later than May 31, 2012. Areas designated as nonattainment are also being classified by operation of law according to the severity of their air quality problems. The classification categories are Marginal, Moderate, Serious, Severe, and Extreme. The EPA is establishing the air quality thresholds that define the classifications in a separate rule that the EPA is signing and publishing in the **Federal Register** on the same schedule as these designations. In accordance with that separate rule, six nonattainment areas in California are being reclassified to a higher classification.

DATES: The effective date of this rule is July 20, 2012.

ADDRESSES: The EPA has established a docket for this action under Docket ID NO. EPA–HQ–OAR–2008–0476. All documents in the docket are listed in the index at *http://www.regulations.gov.* Although listed in the index, some information is not publicly available, i.e., Confidential Business Information or other information whose disclosure is restricted by statute. Certain other material, such as copyrighted material, is not placed on the Internet and will be publicly available only in hard copy form. Publicly available docket materials are available either electronically in the docket or in hard copy at the Docket, EPA/DC, EPA West, Room 3334, 1301 Constitution Ave. NW., Washington, DC. The Public Reading Room is open from 8:30 a.m. to 4:30 p.m., Monday through Friday, excluding legal holidays. The telephone number for the Public Reading Room is (202) 566–1744, and the telephone number for the Office of Air and Radiation Docket and Information Center is (202) 566–1742.

In addition, the EPA has established a Web site for this rulemaking at: *http://www.epa.gov/ozonedesignations.* The Web site includes the EPA's final state and tribal designations, as well as state initial recommendation letters, the EPA modification letters, technical support documents, responses to comments and other related technical information.

FOR FURTHER INFORMATION CONTACT: Carla Oldham, Office of Air Quality Planning and Standards, U.S. Environmental Protection Agency, Mail Code C539–04, Research Triangle Park, NC 27711, phone number (919) 541–3347 or by email at: *oldham.carla@epa.gov.*

Regional Office Contacts

Region I—Richard Burkhart (617) 918–1664
Region II—Bob Kelly (212) 637–3709
Region III—Maria Pino (215) 814–2181
Region IV—Jane Spann (404) 562–9029
Region V—Edward Doty (312) 886–6057
Region VI—Guy Donaldson (214) 665–7242
Region VII—Lachala Kemp (913) 551–7214
Region VIII—Scott Jackson (303) 312–6107
Region IX—John J. Kelly (415) 947–4151
Region X—Claudia Vaupel (206) 553–6121

SUPPLEMENTARY INFORMATION: The public may inspect the rule and state-specific technical support information at the following locations:

Regional offices	States
Dave Conroy, Chief, Air Programs Branch, EPA New England, 1 Congress Street, Suite 1100, Boston, MA 02114–2023, (617) 918–1661.	Connecticut, Maine, Massachusetts, New Hampshire, Rhode Island, and Vermont.
Raymond Werner, Chief, Air Programs Branch, EPA Region 2, 290 Broadway, 25th Floor, New York, NY 10007–1866, (212) 637–3706.	New Jersey, New York, Puerto Rico, and Virgin Islands.
Cristina Fernandez, Branch Chief, Air Quality Planning Branch, EPA Region 3, 1650 Arch Street, Philadelphia, PA 19103–2187, (215) 814–2178.	Delaware, District of Columbia, Maryland, Pennsylvania, Virginia, and West Virginia.
R. Scott Davis, Branch Chief, Air Planning Branch, EPA Region 4, Sam Nunn Atlanta Federal Center, 61 Forsyth, Street SW., 12th Floor, Atlanta, GA 30303, (404) 562–9127.	Alabama, Florida, Georgia, Kentucky, Mississippi, North Carolina, South Carolina, and Tennessee.
John Mooney, Chief, Air Programs Branch, EPA Region 5, 77 West Jackson Street, Chicago, IL 60604, (312) 886–6043.	Illinois, Indiana, Michigan, Minnesota, Ohio, and Wisconsin.
Guy Donaldson, Chief, Air Planning Section, EPA Region 6, 1445 Ross Avenue, Dallas, TX 75202, (214) 665–7242.	Arkansas, Louisiana, New Mexico, Oklahoma, and Texas.
Joshua A. Tapp, Chief, Air Programs Branch, EPA Region 7, 901 North 5th Street, Kansas City, Kansas 66101–2907, (913) 551–7606.	Iowa, Kansas, Missouri, and Nebraska.
Monica Morales, Leader, Air Quality Planning Unit, EPA Region 8, 1595 Wynkoop Street, Denver, CO 80202–1129, (303) 312–6936.	Colorado, Montana, North Dakota, South Dakota, Utah, and Wyoming.
Lisa Hanf, Air Planning Office, EPA Region 9, 75 Hawthorne Street, San Francisco, CA 94105, (415) 972–3854.	American Samoa, Arizona, California, Guam, Hawaii, Nevada, and Northern Mariana Islands.
Debra Suzuki, Manager, State and Tribal Air Programs, EPA Region 10, Office of Air, Waste, and Toxics, Mail Code OAQ–107, 1200 Sixth Avenue, Seattle, WA 98101, (206) 553–0985.	Alaska, Idaho, Oregon, and Washington.

Table of Contents

The following is an outline of the preamble.

I. Preamble Glossary of Terms and Acronyms
II. What is the purpose of this action?
III. What is ozone and how is it formed?
IV. What are the 2008 ozone NAAQS and the health and welfare concerns they address?
V. What are the CAA requirements for air quality designations?
VI. What is the chronology for this designations rule and what guidance did the EPA provide?
VII. What air quality data has the EPA used to designate areas for the 2008 ozone NAAQS?

VIII. What are the ozone air quality classifications?
IX. What is the reclassification of six California nonattainment areas?
X. Can states request that areas within 5 percent of the upper or lower limit of a classification threshold be reclassified?
XI. How do designations affect Indian country?
XII. Where can I find information forming the basis for this rule and exchanges between EPA, states, and tribes related to this rule?
XIII. Statutory and Executive Order Reviews
A. Executive Order 12866: Regulatory Planning and Review and Executive Order 13563: Improving Regulations and Regulatory Review
B. Paperwork Reduction Act
C. Regulatory Flexibility Act
D. Unfunded Mandates Reform Act
E. Executive Order 13132: Federalism
F. Executive Order 13175: Consultation and Coordination With Indian Tribal Governments
G. Executive Order 13045: Protection of Children From Environmental Health and Safety Risks
H. Executive Order 13211: Actions That Significantly Affect Energy Supply, Distribution, or Use
I. National Technology Transfer and Advancement Act (NTTAA)
J. Executive Order 12898: Federal Actions To Address Environmental Justice in Minority Populations and Low-Income Populations
K. Congressional Review Act
L. Judicial Review

I. Preamble Glossary of Terms and Acronyms

The following are abbreviations of terms used in the preamble.

APA Administrative Procedure Act
CAA Clean Air Act
CFR Code of Federal Regulations
DC District of Columbia
EPA Environmental Protection Agency
FR **Federal Register**
NAAQS National Ambient Air Quality Standards
NO_X Nitrogen Oxides
NTTAA National Technology Transfer and Advancement Act
PPM Parts per million
RFA Regulatory Flexibility Act
UMRA Unfunded Mandate Reform Act of 1995
TAR Tribal Authority Rule
U.S. United States
U.S.C. United States Code
VCS Voluntary Consensus Standards
VOC Volatile Organic Compounds

II. What is the purpose of this action?

The purpose of this action is to announce and promulgate initial area designations for most areas of the country with respect to the 2008 primary and secondary NAAQS for ozone, in accordance with the requirements of Clean Air Act (CAA) section 107(d). The EPA is designating areas as either nonattainment, unclassifiable, or unclassifiable/attainment. In addition, the nonattainment areas are classified by operation of law according to the severity of their ozone air quality problems and six areas in California are being reclassified immediately to a higher classification. The classification categories are Marginal, Moderate, Serious, Severe, and Extreme. The EPA is establishing the air quality thresholds that define the classifications in a separate rule titled, ''Implementation of the 2008 National Ambient Air Quality Standards for Ozone: Nonattainment Area Classifications Approach, Attainment Deadlines and Revocation of the 1997 Ozone Standards for Transportation Conformity Purposes'' (Classifications Rule). In that separate rule, the EPA also codified the immediate reclassification of six areas in California. (*See* 40 CFR 51.1103(d).) The list of all areas being designated in each state and in areas of Indian county appear in the tables at the end of this final rule (amendments to 40 CFR 81.301–356). For areas designated as nonattainment, the tables include the area's classification by operation of law or the area's reclassification in accordance with 40 CFR 51.1103(d).

In this action, the EPA is designating 45 areas as nonattainment. Seven of the areas are multi-state areas. The EPA is designating one area, Uinta Basin, WY, as unclassifiable because there is existing non-regulatory monitoring in the area that detected levels of ozone that exceed the NAAQS. Regulatory monitoring has been conducted in that area since April 2011, and thus there are not yet three consecutive years of certified ozone monitoring data available that can be used to determine the area's attainment status. Consistent with previous initial area designations for ozone, the EPA is designating all the remaining state areas and Indian country as unclassifiable/attainment.

Consistent with the EPA's ''Policy for Establishing Separate Air Quality Designations for Areas of Indian Country'' (December 20, 2011), the EPA is designating four areas of Indian country separately from their adjacent/surrounding state areas.[1] The lands of the Pechanga Tribe and the Morongo Tribe in Southern California are being designated as separate nonattainment areas, while two additional areas in Indian country are being designated as separate unclassifiable/attainment areas.

The EPA is basing the designations on the most recent certified ozone air quality monitoring data and an evaluation of factors to assess contributions to nonattainment in nearby areas. State areas designated as nonattainment are subject to planning and emission reduction requirements as specified in the CAA. Requirements vary according to an area's classification. The EPA will be proposing shortly an implementation rule to assist states in the development of state implementation plans for attaining the ozone standards.

III. What is ozone and how is it formed?

Ground-level ozone, O_3, is a gas that is formed by the reaction of volatile organic compounds (VOCs) and oxides of nitrogen (NO_X) in the atmosphere in the presence of sunlight. These precursor emissions are emitted by many types of pollution sources, including power plants and industrial emissions sources, on-road and off-road motor vehicles and engines, and smaller sources, collectively referred to as area sources. Ozone is predominately a summertime air pollutant. However, high ozone concentrations have also been observed in cold months, where a few high elevation areas in the Western U.S. have experienced high levels of local VOC and NO_X emissions that have formed ozone when snow is on the ground and temperatures are near or below freezing. Ozone and ozone precursors can be transported to an area from sources in nearby areas or from sources located hundreds of miles away. For purposes of determining ozone nonattainment area boundaries, the CAA requires the EPA to include areas that contribute to nearby violations of the NAAQS.

IV. What are the 2008 ozone NAAQS and the health and welfare concerns they address?

On March 12, 2008, the EPA revised both the primary and secondary NAAQS for ozone to a level of 0.075 parts per million (ppm) (annual fourth-highest daily maximum 8-hour average concentration, averaged over 3 years) to provide increased protection of public health and the environment.[2] The 2008 ozone NAAQS retains the same general form and averaging time as the 0.08 ppm NAAQS set in 1997, but is set at a more protective level.

Ozone exposure also has been associated with increased susceptibility to respiratory infections, medication use by asthmatics, doctor visits, and emergency department visits and

[1] For more information, visit *http://www.epa.gov/ttncaaa1/t1/memoranda/20120117indiancountry.pdf.*

[2] *See* 73 FR 16436; March 27, 2008. For a detailed explanation of the calculation of the 3-year 8-hour average, *see* 40 CFR part 50, Appendix I.

hospital admissions for individuals with respiratory disease. Ozone exposure may also contribute to premature death, especially in people with heart and lung disease. The secondary ozone standard was revised to protect against adverse welfare effects including impacts to sensitive vegetation and forested ecosystems.

V. What are the CAA requirements for air quality designations?

When the EPA promulgates a new or revised NAAQS, the EPA is required to designate areas as nonattainment, attainment, or unclassifiable, pursuant to section 107(d)(1) of the CAA. The CAA requires the EPA to complete the initial area designation process within 2 years of promulgating the NAAQS. However, if the Administrator has insufficient information to make these designations within that time frame, the EPA has the authority to extend the deadline for designation decisions by up to 1 additional year.

By not later than 1 year after the promulgation of a new or revised NAAQS, each state governor is required to recommend air quality designations, including the appropriate boundaries for areas, to the EPA. The EPA reviews those state recommendations and is authorized to make any modifications the Administrator deems necessary. The statute does not define the term ''necessary,'' but the EPA interprets this to authorize the Administrator to modify designations that did not meet the statutory requirements or were otherwise inconsistent with the facts or analysis deemed appropriate by the EPA. If the EPA is considering modifications to a state's initial recommendation, the EPA is required to notify the state of any such intended modifications to its recommendation not less than 120 days prior to the EPA's promulgation of the final designation. These notifications are commonly known as the ''120-day letters.'' If the state does not agree with the EPA's intended modification, it then has an opportunity to respond to the EPA to demonstrate why it believes the modification proposed by the EPA is inappropriate. Even if a state fails to provide any recommendation for an area, in whole or in part, the EPA still must promulgate a designation that the Administrator deems appropriate.

Section 107(d)(1)(A)(i) of the CAA defines a nonattainment area as, ''any area that does not meet (or that contributes to ambient air quality in a nearby area that does not meet) the national primary or secondary ambient air quality standard for the pollutant.'' If an area meets either prong of this definition, then the EPA is obligated to designate the area as ''nonattainment.'' Section 107(d)(1)(A)(iii) provides that any area that the EPA cannot designate on the basis of available information as meeting or not meeting the standards should be designated as ''unclassifiable.'' Historically for ozone, the EPA designates the remaining areas as ''unclassifiable/attainment'' indicating that the areas either have attaining air quality monitoring data or that air quality information is not available because the areas are not monitored, and the EPA has not determined that the areas contribute to a violation in a nearby area.

The EPA believes that section 107(d) provides the agency with discretion to determine how best to interpret the terms ''contributes to'' and ''nearby'' in the definition of a nonattainment area for a new or revised NAAQS, given considerations such as the nature of a specific pollutant, the types of sources that may contribute to violations, the form of the standards for the pollutant, and other relevant information. In particular, the EPA believes that the statute does not require the agency to establish bright line tests or thresholds for what constitutes ''contribution'' or ''nearby'' for purposes of designations.[3] Similarly, the EPA believes that the statute permits the EPA to evaluate the appropriate application of the term ''area'' as may be appropriate for a particular NAAQS.

Section 301(d) of the CAA authorizes the EPA to approve eligible Indian tribes to implement provisions of the CAA on Indian reservations and other areas within the tribes' jurisdiction. The Tribal Authority Rule (TAR) (40 CFR Part 49), which implements section 301(d) of the CAA, sets forth the criteria and process for tribes to apply to the EPA for eligibility to administer CAA programs. The designations process contained in section 107(d) of the CAA is included among those provisions determined to be appropriate by the EPA for treatment of tribes in the same manner as states. Under the TAR, tribes generally are not subject to the same submission schedules imposed by the CAA on states. As authorized by the TAR, tribes may seek eligibility to submit designation recommendations to the EPA.

VI. What is the chronology for this designations rule and what guidance did the EPA provide?

Within one year after a new or revised air quality standard is established, the CAA requires the governor of each state to submit to the EPA a list of all areas in the state, with recommendations for whether each area meets the standard. On December 4, 2008, the EPA issued guidance for states and tribal agencies to use for this purpose. (*See* memorandum from Robert J. Meyers, Principal Deputy Assistant Administrator, to Regional Administrators, Regions I–X, titled, ''Area Designations for the 2008 Revised Ozone National Ambient Air Quality Standards.) The guidance provided the anticipated timeline for designations and identified important factors that the EPA recommended states and tribes consider in making their recommendations. These factors include air quality data, emissions data, traffic and commuting patterns, growth rates and patterns, meteorology, geography/topography, and jurisdictional boundaries. In the guidance, the EPA asked that states and tribes submit their designation recommendations, including appropriate area boundaries, to the EPA by March 12, 2009. Later in the process, the EPA issued 2 new guidance memoranda related to designating areas of Indian county. (*See* December 20, 2011, memorandum from Stephen D. Page, Director, Office of Air Quality Planning and Standards, to Regional Air Directors, Regions I–X, titled, ''Policy for Establishing Separate Air Quality Designations for Areas of Indian Country,'' and December 20, 2011, memorandum from Stephen D. Page, Director, Office of Air Quality Planning and Standards, to Regional Air Directors, Regions I–X, titled, ''Guidance to Regions for Working with Tribes during the National Ambient Air Quality Standards (NAAQS) Designations Process.'')

Under the initial schedule, the EPA intended to complete the initial designations for the 2008 ozone NAAQS on a 2-year schedule, by March 12, 2010. On September 16, 2009, the EPA announced that it would initiate a rulemaking to reconsider the 2008 ozone NAAQS for various reasons, including the fact that the 0.075 ppm level fell outside of the range recommended by the Clean Air Scientific Advisory Committee, the independent group that provides advice to the EPA Administrator on the technical bases for the EPA's NAAQS. The EPA signed the proposed reconsideration on January 6, 2010. (*See* 75 FR 2938; January 19, 2010.) Because of the significant uncertainty the ozone NAAQS reconsideration created regarding the continued applicability of the 2008 NAAQS, the EPA determined there was insufficient information to

[3] This view was confirmed in *Catawba County* v. *EPA,* 571 F.3d 20 (D.C. Cir. 2009).

designate areas within 2 years of promulgation of the NAAQS. Therefore, the EPA used its authority under CAA section 107(d)(1)(B) to extend the deadline for designating areas by 1 year, until March 12, 2011. (*See* 75 FR 2936; January 19, 2010.) The EPA has not taken final action on the proposed reconsideration; thus, the current NAAQS for ozone remains at 0.075 ppm, as established in 2008.

After the March 12, 2011, designation deadline passed, WildEarth Guardians and Elizabeth Crowe (WildEarth Guardians) filed a lawsuit seeking to compel the EPA to take action to designate areas for the 2008 ozone NAAQS. *WildEarth Guardians and Elizabeth Crowe* v. *Jackson* (D. Ariz. 11–CV–01661). The EPA and WildEarth Guardians settled the case by entering into a consent decree that requires the EPA Administrator to sign a final rule designating areas for the 2008 ozone NAAQS by May 31, 2012.

On September 22, 2011, the EPA issued a memorandum to clarify for state and local agencies the status of the 2008 ozone NAAQS and to outline plans for moving forward to implement them. The EPA indicated that it would proceed with initial area designations for the 2008 NAAQS, and planned to use the recommendations states made in 2009 as updated by the most current, certified air quality data from 2008–2010. While the EPA did not request that states submit updated designation recommendations, the EPA provided the opportunity for states to do so. Several states chose to update their recommendations, and some requested that the EPA base designations for their areas on certified air quality data from 2009–2011, and committed to certify the 2011 data earlier than the May 1 deadline for annual air monitoring certification under 40 CFR part 58.15(a)(2) so that the EPA would have sufficient time to consider the data in making decisions on designations and nonattainment area boundaries.

On or about December 9, 2011, the EPA sent letters to Governors and Tribal leaders notifying them of the EPA's preliminary response to their designation recommendations and to inform them of the EPA's approach for completing the designations for the 2008 ozone NAAQS. The EPA requested that states submit any additional information that they wanted the EPA to consider by February 29, 2011, including any certified 2011 air quality monitoring data. On January 31, 2011, the EPA sent revised 120-day letter responses to Illinois, Indiana, and Wisconsin based on updated ozone air quality data for 2009–2011, submitted by the state of Illinois two days before the EPA sent the December 9, 2011, letters. Given the timing of Illinois' submission of certified data, EPA was not able to consider the information in the December 9, 2011, letters. After reviewing the new information, which indicated a violation of the ozone NAAQS at a monitor in the Chicago area, the EPA sent letters on January 31, 2012 notifying Illinois, Indiana, and Wisconsin that it intended to designate certain counties, identified in those letters, as nonattainment for the 2008 ozone NAAQS. The EPA cannot finalize a designation for those areas until 120 days following the letters. Therefore, the EPA will be designating the Illinois, Indiana, and Wisconsin counties identified in the January 31, 2011, letters in a separate rule that will be signed no later than May 31, 2012.

Although not required by section 107(d) of the CAA, the EPA also provided an opportunity for members of the public to comment on the EPA's 120-day response letters to states and tribes. The EPA announced a 30-day public comment period in the **Federal Register** on December 20, 2011 (76 FR 78872). The comment period was subsequently extended until February 3, 2012 (77 FR 2677; January 19, 2012). On February 14, 2012 (77 FR 8211), the EPA reopened the public comment period for the limited purpose of inviting comment on the EPA's revised responses to Illinois, Indiana, and Wisconsin. State and tribal recommendations and the EPA's preliminary responses were posted on EPA's Web site at *http://www.epa.gov/ozonedesignations* and are available in the docket for the designations action. Comments from the states, tribes and the public, and EPA's responses to significant comments, are also in the docket.

VII. What air quality data has the EPA used to designate areas for the 2008 ozone NAAQS?

The final ozone designations are based primarily on certified air quality monitoring data from calendar years 2008–2010, which was the most recent certified data available to the EPA at the time the EPA notified the states of its intended modifications to their recommendations. Under 40 CFR 58.16, states are required to report all monitored ozone air quality data and associated quality assurance data within 90 days after the end of each quarterly reporting period, and under 40 CFR part 58.15(a)(2) states are required to submit annual summary reports and a data certification letter to the EPA by May 1 for ozone air quality data collected in the previous calendar year. States generally had not completed these requirements for calendar year 2011 ozone air quality data when the EPA notified states of our intended designations on December 9, 2011. In certain cases, states included as part of their designation recommendations a request that the EPA consider monitoring data from 2009–2011 in making final designation decisions. In these requests, they indicated to the EPA what they expected their certified ozone air quality data would show regarding whether an area was attaining the standard, and for designations purposes they committed to certifying their 2011 data no later than February 29, 2012, so that the EPA would have sufficient time to consider it. Thus, for those areas, the EPA considered the state's preliminary representation of 2011 data in sending the 120-day notification letter. We have verified these representations in making our final designations decisions.

VIII. What are the ozone air quality classifications?

In accordance with CAA section 181(a)(1), each area designated as nonattainment for the 2008 ozone NAAQS is classified by operation of law at the same time as the area is designated by the EPA. Under Subpart 2 of part D of title I of the CAA, state planning and emissions control requirements for ozone are determined, in part, by a nonattainment area's classification. The ozone nonattainment areas are classified based on the severity of their ozone levels (as determined based on the area's ''design value,'' which represents air quality in the area for the most recent 3 years).[4] The possible classifications are Marginal, Moderate, Serious, Severe, and Extreme. Nonattainment areas with a ''lower'' classification have ozone levels that are closer to the standard than areas with a ''higher'' classification. Areas in the lower classification levels have fewer and/or less stringent mandatory air quality planning and control requirements than those in higher classifications. The final Classifications Rule, which is being signed at the same time as the designations rule and being published and effective at the same time or before the designations, establishes the classification thresholds for each classification category for purposes of the 2008 NAAQS and explains the EPA's methodology for calculating the thresholds. In addition, in the

[4] The air quality design value for the 8-hour ozone NAAQS is the 3-year average of the annual 4th highest daily maximum 8-hour average ozone concentration. *See* 40 CFR part 50, Appendix I.

Classifications Rule, the EPA promulgated a regulation, 40 CFR 51.1103(d), that immediately reclassifies 6 areas in California to higher classifications. The classification for each nonattainment area designated for the 2008 ozone NAAQS is shown in the 40 CFR part 81 tables at the end of this designations rule.

IX. What is the reclassification of six California nonattainment areas?

The final Classifications Rule addresses the reclassification for the 2008 ozone NAAQS of selected areas in California that had voluntarily reclassified under the 1997 ozone NAAQS. In accordance with the final Classifications Rule, the following areas are being voluntarily reclassified to a higher classification for purposes of the 2008 NAAQS pursuant to that rule: Serious—Ventura County, CA; Severe—Los Angeles-San Bernardino Counties (West Mojave Desert), Riverside County (Coachella Valley), and Sacramento Metro, CA; Extreme—Los Angeles-South Coast Air Basin, and San Joaquin Valley, CA. These classifications are reflected in the tables at the end of this final rule (amendments to 40 CFR 81.301–356).

X. Can states request that areas within 5 percent of the upper or lower limit of a classification threshold be reclassified?

Under CAA section 181(a)(4), an ozone nonattainment area may be reclassified to a higher or lower classification (also known as a classification bump up or a bump down) ''if an area classified under paragraph (1) (Table 1) would have been classified in another category if the design value in the area were 5 percent greater or 5 percent less than the level on which such classification was based.'' The section also states that ''In making such adjustment, the Administrator may consider the number of exceedances of the national primary ambient air quality standard for ozone in the area, the level of pollution transport between the area and other affected areas, including both intrastate and interstate transport, and the mix of sources and air pollutants in the area.''

As noted in the preamble to the rule designating and classifying areas following enactment of the CAA Amendments of 1990, the section 181(a)(4) provisions grant the Administrator broad discretion in making or determining not to make, a reclassification. (*See* 56 FR 56698; November 6, 1991.) As part of the 1991 action, the EPA developed criteria to evaluate whether it is appropriate to reclassify a particular area. (*See* list below and at 56 FR 56698.) Because section 181(b)(3) provides that the EPA must grant any state request to reclassify an area into a higher classification, the EPA focused these criteria primarily on how the EPA would assess requests for a lower classification. In 1991, EPA approved reclassifications when the area met the first requirement (a request by the state to EPA) and at least some of the other criteria, and did not violate any of the criteria (emissions reductions, trends, etc.). The EPA used the same method and criteria once again to evaluate reclassification requests under section 181(a)(4) for purposes of the 1997 ozone NAAQS. The EPA intends to continue to use this same approach for purposes of evaluating any request for a reclassification for the 2008 ozone NAAQS. For reclassifications downwards, states may only request a reclassification to the next lower classification, and air quality data from prior years cannot be used as justification to be reclassified to an even lower classification.

The criteria EPA intends to use to evaluate whether it is appropriate to reclassify a particular area include:

Request by state: The EPA does not intend to exercise its authority to reclassify areas on the EPA's own initiative. Rather, the EPA intends to rely on the state to submit a request for a reclassification. A tribe may also submit such a request and, in the case of a multi-state nonattainment area, all affected states must submit the same reclassification request.

Discontinuity: A five percent reclassification must not result in an illogical or excessive discontinuity relative to surrounding areas. In particular, in light of the area-wide nature of ozone formation, a reclassification should not create a ''donut hole'' where an area of one classification is surrounded by areas of higher classification.

Attainment: Evidence should be available that the proposed area would be able to attain by the earlier date specified by the lower classification in the case of a reclassification downward.

Emissions reductions: Evidence should be available that the area would be very likely to achieve the appropriate total percent emission reduction necessary in order to attain in the shorter time period for a reclassification downward.

Trends: Near- and long-term trends in emissions and air quality should support a reclassification. Historical air quality data should indicate substantial air quality improvement for a reclassification downward. Growth projections and emission trends should support a reclassification downward. In addition, we will consider whether vehicle miles traveled and other indicators of emissions are increasing at higher than normal rates.

Years of data: The same years of ozone air quality data used for the initial designation and classification should be used for reclassification requests.

A. Five Percent Reclassifications to a Lower Classification

For an area to be eligible to be reclassified to a lower classification under section 181(a)(4), the area's design value must be within five percent of the upper limit for the next lower classification. For example, an area with a Moderate design value of 0.090 ppm (or less) would be eligible to request a reclassification to Marginal because 0.090 ppm is five percent more than the upper limit of 0.086 ppm for the Marginal classification. Accordingly, areas with the following design values may be eligible to request a reclassification to the next lower classification: Moderate areas with a design value of 0.090 ppm or less; Serious areas with a design value of 0.105 ppm or less; and Severe areas with a design value of 0.118 ppm or less.

B. Five Percent Reclassifications to a Higher Classification

An ozone nonattainment area may also be reclassified under section 181(a)(4) to the next higher classification. As with five percent reclassifications to a lower classification, the EPA does not intend to exercise its authority to reclassify areas to a higher classification on the EPA's own initiative. Rather, the EPA intends to rely on the state to submit a request for such a reclassification. Areas with the following design values are eligible to request a reclassification to the next higher classification: Marginal areas with a design value of 0.082 ppm or more; Moderate areas with a design value of 0.095 ppm or more; and Serious areas with a design value of 0.108 ppm or more.

C. Timing of the Five Percent Reclassifications

A Governor or eligible Tribal governing body of any area that wishes to pursue a reclassification should submit all requests and supporting documentation to the EPA Regional Office by June 20, 2012. This relatively short time frame is necessary because section 181(a)(4) only authorizes the Administrator to make such

reclassifications within 90 days after the initial classification.

XI. How do designations affect Indian country?

All state areas listed in the tables at the end of this document are designated as indicated, and include Indian country geographically located within such areas, except as otherwise noted. In general, state recommendations for initial area designations do not apply to Indian country. Consistent with the ''Policy for Establishing Separate Air Quality Designations for Areas of Indian Country'' (December 20, 2011), in instances where the EPA did not receive an initial designation recommendation from a tribe, the EPA is designating their area of Indian country along with the adjacent/surrounding state area(s). Tribes whose areas of Indian country are designated as nonattainment for the 2008 ozone NAAQS are being affected by poor air quality. Where nonattainment areas include both Indian country and state land, it is important for states and tribes to work together to coordinate planning efforts. Coordinated planning will help ensure that the planning decisions made by the states and tribes complement each other and that the nonattainment area makes reasonable progress toward attainment and ultimately attains the 2008 ozone NAAQS.

XII. Where can I find information forming the basis for this rule and exchanges between the EPA, states, and tribes related to this rule?

Information providing the basis for this action are provided in the docket for this rulemaking. The applicable EPA guidance memoranda and copies of correspondence regarding this process between the EPA and the states, tribes, and other parties are available for review at the EPA Docket Center listed above in the addresses section of this document, and on the EPA's ozone designation Web site at *http://www.epa.gov/ozonedesignations.* State-specific information is available from the EPA Regional Offices.

XIII. Statutory and Executive Order Reviews

Upon promulgation of a new or revised NAAQS, the CAA requires the EPA to designate areas as attaining or not attaining the NAAQS. The CAA then specifies requirements for areas based on whether such areas are attaining or not attaining the NAAQS. In this final rule, the EPA assigns designations to areas as required.

A. Executive Order 12866: Regulatory Planning and Review and Executive Order 13563: Improving Regulation and Regulatory Review

This action responds to the CAA requirement to promulgate air quality designations after promulgation of a new or revised NAAQS. This type of action is exempt from review under Executive Orders 12866 (58 FR 51735, October 4, 1993) and 13563 (76 FR 3821, January 21, 2011).

B. Paperwork Reduction Act

This action does not impose an information collection burden under the provisions of the *Paperwork Reduction Act,* 44 U.S.C. 3501 *et seq.* Burden is defined at 5 CFR 1320.3(b). This rule responds to the CAA requirement to promulgate air quality designations after promulgation of a new or revised NAAQS. This requirement is prescribed in the CAA section 107. The present final rule does not establish any new information collection requirements.

C. Regulatory Flexibility Act

This final rule is not subject to the Regulatory Flexibility Act (RFA), which generally requires an agency to prepare a regulatory flexibility analysis for any rule that will have a significant economic impact on a substantial number of small entities. The RFA applies only to rules subject to notice-and-comment rulemaking requirements under the Administrative Procedure Act (APA) or any other statute. This rule is not subject to notice-and-comment requirements as provided under CAA section 107(d)(2)(B).

D. Unfunded Mandates Reform Act

This action contains no federal mandate under the provisions of Title II of the Unfunded Mandates Reform Act of 1995 (UMRA), 2 U.S.C. 1531–1538 for state, local, or tribal governments or the private sector. The action imposes no enforceable duty on any state, local or tribal governments or the private sector. Therefore, this action is not subject to the requirements of sections 202 and 205 of the UMRA.

This action is also not subject to the requirements of section 203 of UMRA because it contains no regulatory requirements that might significantly or uniquely affect small governments. It does not create any additional requirements beyond those of the CAA and ozone NAAQS (40 CFR 50.15). The CAA establishes the process whereby states take primary responsibility in developing plans to meet the ozone NAAQS.

E. Executive Order 13132: Federalism

This final rule does not have federalism implications. It will not have substantial direct effects on the states, on the relationship between the national government and the states, or on the distribution of power and responsibilities among the various levels of government, as specified in Executive Order 13132. The CAA establishes the process whereby states take primary responsibility in developing plans to meet the ozone NAAQS. This rule will not modify the relationship of the states and the EPA for purposes of developing programs to implement the ozone NAAQS. Thus, Executive Order 13132 does not apply to this rule.

F. Executive Order 13175: Consultation and Coordination With Indian Tribal Governments

Subject to the Executive Order 13175 (65 FR 67249, November 9, 2000) the EPA may not issue a regulation that has tribal implications, that imposes substantial direct compliance costs, and that is not required by statute, unless the Federal government provides the funds necessary to pay the direct compliance costs incurred by tribal governments, or the EPA consults with tribal officials early in the process of developing the proposed regulation and develops a tribal summary impact statement.

The EPA has concluded that this action may have tribal implications. However, it will neither impose substantial direct compliance costs on tribal governments, nor preempt tribal law. Tribes whose areas of Indian country are being designated as ''nonattainment'' for the 2008 ozone NAAQS are affected by poor air quality. Although tribes are not required to submit implementation plans under the Clean Air Act, for those tribes whose areas are being designated as part of surrounding state areas, it will be imperative that states and the tribes coordinate on air quality planning efforts to ensure that ozone levels are reduced. In addition, several tribes' areas of Indian country are being designated as ''nonattainment'' separately from their surrounding state areas. For these tribes, internal capacity for air quality planning will be important to enable their areas of Indian country to come into attainment.

The EPA consulted with tribal officials early in the process of developing this regulation to permit them to have meaningful and timely input into its development. At the beginning of the designations process,

letters were sent to all tribes who were expected to be impacted by designations for the 2008 ozone NAAQS. These letters not only informed the tribes of the overall designations process, but also offered the tribes consultation to ensure early communication and coordination. Additionally, letters were sent to potentially affected tribes indicating the EPA's intended designations for their areas of Indian country. These letters offered an additional opportunity for consultation. All consultations were completed in late February/early April 2012. During consultation, the primary concerns raised by tribes included the following: Impact of nonattainment designation on future economic development; appropriateness of using data from monitors not on tribal land; and ensuring final decisions are consistent with the EPA's ''Policy for Establishing Separate Air Quality Designations for Areas of Indian Country.'' (December 20, 2011). During the consultations, the EPA's Regional Offices ensured that the tribes fully understood the reasoning for the EPA's preliminary designations decisions and how those decisions are aligned with a consideration of the most recent certified air quality data and all other relevant information, including the EPA's ''Policy for Establishing Separate Air Quality Designations for Areas of Indian Country.'' To the extent possible, the EPA included the tribes' input into the final decision-making process for designations of their areas of Indian country for the 2008 ozone NAAQS.

G. Executive Order 13045: Protection of Children From Environmental Health and Safety Risks

The EPA interprets Executive Order 13045 (62 FR 19885, April 23, 1997) as applying only to those regulatory actions that concern health or safety risks, such that the analysis required under section 5–501 of the Executive Order has the potential to influence the regulation. This action is not subject to Executive Order 13045 because it does not establish an environmental standard intended to mitigate health or safety risks.

H. Executive Order 13211: Actions That Significantly Affect Energy Supply, Distribution, or Use

This action is not subject to Executive Order 13211 (66 FR 28355 (May 22, 2001)), because it is not a significant regulatory action under Executive Order 12866.

I. National Technology Transfer and Advancement Act (NTTAA)

Section 12(d) of the NTTAA of 1995, Public Law 104–113, section 12(d) (15 U.S.C. 272 note) directs the EPA to use voluntary consensus standards (VCS) in its regulatory activities unless to do so would be inconsistent with applicable law or otherwise impracticable. Voluntary consensus standards are technical standards (e.g., materials specifications, test methods, sampling procedures, and business practices) that are developed or adopted by VCS bodies. The NTTAA directs the EPA to provide Congress, through the Office of Management and Budget, explanations when the Agency decides not to use available and applicable VCS.

This action does not involve technical standards. Therefore, the EPA did not consider the use of any VCS.

J. Executive Order 12898: Federal Actions To Address Environmental Justice in Minority Populations and Low-Income Populations.

Executive Order 12898 (59 FR 7629 (Feb. 16, 1994)) establishes federal executive policy on environmental justice. Its main provision directs federal agencies, to the greatest extent practicable and permitted by law, to make environmental justice part of their mission by identifying and addressing, as appropriate, disproportionately high and adverse human health or environmental effects of their programs, policies, and activities on minority populations and low-income populations in the U.S.

The CAA requires that the EPA designate as nonattainment ''any area that does not meet (or that contributes to ambient air quality in a nearby area that does not meet) the national primary or secondary ambient air quality standard for the pollutant.'' By designating as nonattainment all areas where available information indicates a violation of the ozone NAAQS or a contribution to a nearby violation, this action protects all those residing, working, attending school, or otherwise present in those areas regardless of minority or economic status.

The EPA has determined that this final rule will not have disproportionately high and adverse human health or environmental effects on minority or low-income populations because it increases the level of environmental protection for all affected populations without having any disproportionately high and adverse human health or environmental effects on any population, including any minority or low-income population.

K. Congressional Review Act

The Congressional Review Act, 5 U.S.C. 801 *et seq.,* as added by the Small Business Regulatory Enforcement Fairness Act of 1996, generally provides that before a rule may take effect, the agency promulgating the rule must submit a rule report, which includes a copy of the rule, to each House of the Congress and to the Comptroller General of the U.S. The EPA will submit a report containing this rule and other required information to the U.S. Senate, the U.S. House of Representatives, and the Comptroller General of the U.S. prior to publication of the rule in the **Federal Register**. A major rule cannot take effect until 60 days after it is published in the **Federal Register**. This action is not a ''major rule'' as defined by 5 U.S.C. 804(2). This rule will be effective July 20, 2012.

L. Judicial Review

Section 307(b)(1) of the CAA indicates which Federal Courts of Appeal have venue for petitions of review of final actions by the EPA. This section provides, in part, that petitions for review must be filed in the Court of Appeals for the District of Columbia Circuit: (i) When the agency action consists of ''nationally applicable regulations promulgated, or final actions taken, by the Administrator,'' or (ii) when such action is locally or regionally applicable, if ''such action is based on a determination of nationwide scope or effect and if in taking such action the Administrator finds and publishes that such action is based on such a determination.''

This rule designating areas for the 2008 ozone NAAQS is ''nationally applicable'' within the meaning of section 307(b)(1). This rule establishes designations for areas across the U.S. for the 2008 ozone NAAQS. At the core of this rulemaking is the EPA's interpretation of the definition of nonattainment under section 107(d)(1) of the CAA, and its application of that interpretation to areas across the country.

For the same reasons, the Administrator also is determining that the final designations are of nationwide scope and effect for the purposes of section 307(b)(1). This is particularly appropriate because, in the report on the 1977 Amendments that revised section 307(b)(1) of the CAA, Congress noted that the Administrator's determination that an action is of ''nationwide scope or effect'' would be appropriate for any action that has a scope or effect beyond a single judicial circuit. H.R. Rep. No. 95–294 at 323, 324, *reprinted* in 1977

U.S.C.C.A.N. 1402–03. Here, the scope and effect of this rulemaking extends to numerous judicial circuits since the designations apply to areas across the country. In these circumstances, section 307(b)(1) and its legislative history calls for the Administrator to find the rule to be of ''nationwide scope or effect'' and for venue to be in the D.C. Circuit.

Thus, any petitions for review of final designations must be filed in the Court of Appeals for the District of Columbia Circuit within 60 days from the date final action is published in the **Federal Register**.

List of Subjects in 40 CFR Part 81

Environmental protection, Air pollution control, National parks, Wilderness areas.

Dated: April 30, 2012.

Lisa P. Jackson,

Administrator.

For the reasons set forth in the preamble, 40 CFR Part 81, is amended as follows:

PART 81—DESIGNATIONS OF AREAS FOR AIR QUALITY PLANNING PURPOSES

■ 1. The authority citation for part 81 continues to read as follows:

Authority: 42 U.S.C. 7401, *et seq.*

Subpart C–Section 107 Attainment Status Designations

■ 2. Section 81.301 is amended as follows:

■ a. By revising the table heading for ''Alabama—Ozone (8-Hour Standard)'' to read ''Alabama—1997 8-Hour Ozone NAAQS (Primary and Secondary)''

■ b. By adding a new table entitled ''Alabama—2008 8-Hour Ozone NAAQS (Primary and Secondary)'' following the newly designated table '' Alabama—1997 8-Hour Ozone NAAQS (Primary and Secondary)'' to read as follows:

§ 81.301 Alabama.

* * * * *

ALABAMA—2008 8-HOUR OZONE NAAQS

[Primary and secondary]

Designated area [1]	Designation		Classification	
	Date [2]	Type	Date [2]	Type
Autauga County		Unclassifiable/Attainment.		
Baldwin County		Unclassifiable/Attainment.		
Barbour County		Unclassifiable/Attainment.		
Bibb County		Unclassifiable/Attainment.		
Blount County		Unclassifiable/Attainment.		
Bullock County		Unclassifiable/Attainment.		
Butler County		Unclassifiable/Attainment.		
Calhoun County		Unclassifiable/Attainment.		
Chambers County		Unclassifiable/Attainment.		
Cherokee County		Unclassifiable/Attainment.		
Chilton County		Unclassifiable/Attainment.		
Choctaw County		Unclassifiable/Attainment.		
Clarke County		Unclassifiable/Attainment.		
Clay County		Unclassifiable/Attainment.		
Cleburne County		Unclassifiable/Attainment.		
Coffee County		Unclassifiable/Attainment.		
Colbert County		Unclassifiable/Attainment.		
Conecuh County		Unclassifiable/Attainment.		
Coosa County		Unclassifiable/Attainment.		
Covington County		Unclassifiable/Attainment.		
Crenshaw County		Unclassifiable/Attainment.		
Cullman County		Unclassifiable/Attainment.		
Dale County		Unclassifiable/Attainment.		
Dallas County		Unclassifiable/Attainment.		
De Kalb County		Unclassifiable/Attainment.		
Elmore County		Unclassifiable/Attainment.		
Escambia County		Unclassifiable/Attainment.		
Fayette County		Unclassifiable/Attainment.		
Franklin County		Unclassifiable/Attainment.		
Geneva County		Unclassifiable/Attainment.		
Greene County		Unclassifiable/Attainment.		
Hale County		Unclassifiable/Attainment.		
Henry County		Unclassifiable/Attainment.		
Houston County		Unclassifiable/Attainment.		
Jackson County		Unclassifiable/Attainment.		
Jefferson County		Unclassifiable/Attainment.		
Lamar County		Unclassifiable/Attainment.		
Lauderdale County		Unclassifiable/Attainment.		
Lawrence County		Unclassifiable/Attainment.		
Lee County		Unclassifiable/Attainment.		
Limestone County		Unclassifiable/Attainment.		
Lowndes County		Unclassifiable/Attainment.		
Macon County		Unclassifiable/Attainment.		
Madison County		Unclassifiable/Attainment.		
Marengo County		Unclassifiable/Attainment.		
Marion County		Unclassifiable/Attainment.		
Marshall County		Unclassifiable/Attainment.		

ALABAMA—2008 8-HOUR OZONE NAAQS—Continued

[Primary and secondary]

Designated area [1]	Designation		Classification	
	Date [2]	Type	Date [2]	Type
Mobile County		Unclassifiable/Attainment.		
Monroe County		Unclassifiable/Attainment.		
Montgomery County		Unclassifiable/Attainment.		
Morgan County		Unclassifiable/Attainment.		
Perry County		Unclassifiable/Attainment.		
Pickens County		Unclassifiable/Attainment.		
Pike County		Unclassifiable/Attainment.		
Randolph County		Unclassifiable/Attainment.		
Russell County		Unclassifiable/Attainment.		
Shelby County		Unclassifiable/Attainment.		
St. Clair County		Unclassifiable/Attainment.		
Sumter County		Unclassifiable/Attainment.		
Talladega County		Unclassifiable/Attainment.		
Tallapoosa County		Unclassifiable/Attainment.		
Tuscaloosa County		Unclassifiable/Attainment.		
Walker County		Unclassifiable/Attainment.		
Washington County		Unclassifiable/Attainment.		
Wilcox County		Unclassifiable/Attainment.		
Winston County		Unclassifiable/Attainment.		

[1] Includes any Indian country in each county or area, unless otherwise specified.
[2] This date is July 20, 2012, unless otherwise noted.

■ 3. Section 81.302 is amended as follows:

■ a. By revising the table heading for ''Alaska—Ozone (8-Hour Standard)'' to read ''Alaska—1997 8-Hour Ozone NAAQS (Primary and Secondary)''

■ b. By adding a new table entitled ''Alaska—2008 8-Hour Ozone NAAQS (Primary and Secondary)'' following the newly designated table ''Alaska—1997 8-Hour Ozone NAAQS (Primary and Secondary)'' to read as follows:

§ 81.302 Alaska.

* * * * *

ALASKA—2008 8-HOUR OZONE NAAQS

[Primary and secondary]

Designated area	Designation		Classification	
	Date [1]	Type	Date [1]	Type
Statewide and Any Areas of Indian Country		Unclassifiable/Attainment		

[1] This date is July 20, 2012, unless otherwise noted.

■ 4. Section 81.303 is amended as follows:

■ a. By revising the table heading for ''Arizona—Ozone (8-Hour Standard)'' to read ''Arizona—1997 8-Hour Ozone NAAQS (Primary and Secondary)''

■ b. By adding a new table entitled ''Arizona—2008 8-Hour Ozone NAAQS (Primary and Secondary)'' following the newly designated table ''Arizona—1997 8-Hour Ozone NAAQS (Primary and Secondary)'' to read as follows:

§ 81.303 Arizona.

* * * * *

ARIZONA—2008 8-HOUR OZONE NAAQS

[Primary and secondary]

Designated area	Designation		Classification	
	Date [1]	Type	Date [1]	Type
Phoenix-Mesa, AZ: [2]	.....	Nonattainment	.....	Marginal.
Maricopa County (part).				
T1N, R1E (except that portion in Indian Country); T1N, R2E; T1N, R3E; T1N, R4E; T1N, R5E; T1N, R6E; T1N, R7E; T1N, R1W; T1N, R2W; T1N, R3W; T1N, R4W; T1N, R5W; T1N, R6W; T1N, R7W; T1N, R8W; T2N, R1E; T2N, R2E; T2N, R3E; T2N, R4E; T2N, R5E; T2N, R6E; T2N, R7E; T2N, R8E; T2N, R9E; T2N, R10E; T2N, R11E; T2N, R12E (except that portion in Gila County); T2N, R13E (except that portion in Gila County); T2N, R1W; T2N, R2W; T2N, R3W; T2N, R4W; T2N, R5W; T2N, R6W; T2N, R7W; T2N, R8W; T3N, R1E; T3N, R2E; T3N, R3E; T3N, R4E; T3N, R5E; T3N, R6E; T3N, R7E; T3N, R8E; T3N, R9E; T3N, R10E (except that portion in Gila County); T3N, R11E (except that portion in Gila County); T3N, R12E (except that portion in Gila County); T3N, R1W; T3N, R2W; T3N, R3W; T3N, R4W; T3N, R5W; T3N, R6W; T4N, R1E; T4N, R2E; T4N, R3E; T4N, R4E; T4N, R5E; T4N, R6E; T4N, R7E; T4N, R8E; T4N, R9E; T4N, R10E (except that portion in Gila County); T4N, R11E (except that portion in Gila County); T4N, R12E (except that portion in Gila County); T4N, R1W; T4N, R2W; T4N, R3W; T4N, R4W; T4N, R5W; T4N, R6W; T5N, R1E; T5N, R2E; T5N, R3E; T5N, R4E; T5N, R5E; T5N, R6E; N, R8E; T5N, R9E (except that portion in Gila County); T5N, R10E (except that portion in Gila County); T5N, R1W; T5N, R2W; T5N, R3W; T5N, R4W; T5N, R5W; T6N, R1E (except that portion in Yavapai County); T6N, R2E; T6N, R3E; T6N, R4E; T6N, R5E; T6N, R6E; T6N, R7E; T6N, R8E; T6N, R9E (except that portion in Gila County); T6N, R10E (except that portion in Gila County); T6N, R1W (except that portion in Yavapai County); T6N, R2W; T6N, R3W; T6N, R4W; T6N, R5W; T7N, R1E; (except that portion in Yavapai County); T7N, R2E (except that portion in Yavapai County); T7N, R3E; T7N, R4E; T7N, R5E; T7N, R6E; T7N, R7E; T7N, R8E; T7N, R9E (except that portion in Gila County); T7N, R1W (except that portion in Yavapai County); T7N, R2W (except that portion in Yavapai County); T8N, R2E (except that portion in Yavapai County); T8N, R3E (except that portion in Yavapai County); T8N, R4E (except that portion in Yavapai County); T8N, R5E (except that portion in Yavapai County); T8N, R6E (except that portion in Yavapai County); T8N, R7E (except that portion in Yavapai County); T8N, R8E (except that portion in Yavapai and Gila Counties); T8N, R9E (except that portion in Yavapai and Gila Counties); T1S, R1E (except that portion in Indian Country); T1S, R2E (except that portion in Pinal County and in Indian Country); T1S, R3E; T1S, R4E; T1S, R5E; T1S, R6E; T1S, R7E; T1S, R1W; T1S, R2W; T1S, R3W; T1S, R4W; T1S, R5W; T1S, R6W; T2S, R1E (except that portion in Indian Country); T2S, R5E; T2S, R6E; T2S, R7E; T2S, R1W; T2S, R2W; T2S, R3W; T2S, R4W; T2S, R5W; T3S, R1E; T3S, R1W; T3S, R2W; T3S, R3W; T3S, R4W; T3S, R5W; T4S, R1E; T4S, R1W; T4S, R2W; T4S, R3W; T4S, R4W; T4S, R5W; T5S, R4W (Sections 1 through 22 and 27 through 34)				
Pinal County (part) Apache Junction:				
T1N, R8E; T1S, R8E (Sections 1 through 12).				
Fort McDowell Yavapai Nation [3].				
Salt River Pima-Maricopa Indian Community of the Salt River Reservation [3].				
Tohono O'odham Nation of Arizona [3].				
Rest of State: [4]	.....	Unclassifiable/Attainment.		
Apache County				
Cochise County				
Coconino County				
Gila County				
Graham County				
Greenlee County				
La Paz County				
Maricopa County (part) remainder				
Mohave County				
Navajo County				

ARIZONA—2008 8-HOUR OZONE NAAQS—Continued

[Primary and secondary]

Designated area	Designation		Classification	
	Date [1]	Type	Date [1]	Type
Pima County				
Pinal County (part) remainder				
Santa Cruz County				
Yavapai County				
Yuma County				

[1] This date is July 20, 2012, unless otherwise noted.
[2] Excludes Indian country located in each area, unless otherwise noted.
[3] Includes Indian country of the tribe listed in this table located in the identified area. Information pertaining to areas of Indian country in this table is intended for CAA planning purposes only and is not an EPA determination of Indian country status or any Indian country boundary. EPA lacks the authority to establish Indian country land status, and is making no determination of Indian country boundaries, in this table.
[4] Includes any Indian country in each county or area, unless otherwise specified.

■ 5. Section 81.304 is amended as follows:

■ a. By revising the table heading for ''Arkansas—Ozone (8-Hour Standard)'' to read ''Arkansas—1997 8-Hour Ozone NAAQS (Primary and Secondary)''

■ b. By adding a new table entitled ''Arkansas—2008 8-Hour Ozone NAAQS (Primary and Secondary)'' following the newly designated table ''Arkansas—1997 8-Hour Ozone NAAQS (Primary and Secondary)'' to read as follows:

§ 81.304 Arkansas.

* * * * *

ARKANSAS—2008 8-HOUR OZONE NAAQS

[Primary and secondary]

Designated area	Designation		Classification	
	Date [1]	Type	Date [1]	Type
Memphis, TN-MS-AR [2] Crittenden County		Nonattainment		Marginal.
Rest of State: [3]				
Ashley County		Unclassifiable/Attainment.		
Arkansas County		Unclassifiable/Attainment.		
Baxter County		Unclassifiable/Attainment.		
Benton County		Unclassifiable/Attainment.		
Boone County		Unclassifiable/Attainment.		
Bradley County		Unclassifiable/Attainment.		
Calhoun County		Unclassifiable/Attainment.		
Carroll County		Unclassifiable/Attainment.		
Chicot County		Unclassifiable/Attainment.		
Clark County		Unclassifiable/Attainment.		
Clay County		Unclassifiable/Attainment.		
Cleburne County		Unclassifiable/Attainment.		
Cleveland County		Unclassifiable/Attainment.		
Columbia County		Unclassifiable/Attainment.		
Conway County		Unclassifiable/Attainment.		
Craighead County		Unclassifiable/Attainment.		
Crawford County		Unclassifiable/Attainment.		
Crittenden County		Unclassifiable/Attainment.		
Cross County		Unclassifiable/Attainment.		
Dallas County		Unclassifiable/Attainment.		
Desha County		Unclassifiable/Attainment.		
Drew County		Unclassifiable/Attainment.		
Faulkner County		Unclassifiable/Attainment.		
Franklin County		Unclassifiable/Attainment.		
Fulton County		Unclassifiable/Attainment.		
Garland County		Unclassifiable/Attainment.		
Grant County		Unclassifiable/Attainment.		
Greene County		Unclassifiable/Attainment.		
Hempstead County		Unclassifiable/Attainment.		
Hot Spring County		Unclassifiable/Attainment.		
Howard County		Unclassifiable/Attainment.		
Independence County		Unclassifiable/Attainment.		
Izard County		Unclassifiable/Attainment.		
Jackson County		Unclassifiable/Attainment.		
Jefferson County		Unclassifiable/Attainment.		
Johnson County		Unclassifiable/Attainment.		
Lafayette County		Unclassifiable/Attainment.		
Lawrence County		Unclassifiable/Attainment.		
Lee County		Unclassifiable/Attainment.		

ARKANSAS—2008 8-HOUR OZONE NAAQS—Continued

[Primary and secondary]

Designated area	Designation		Classification	
	Date [1]	Type	Date [1]	Type
Lincoln County		Unclassifiable/Attainment.		
Little River County		Unclassifiable/Attainment.		
Logan County		Unclassifiable/Attainment.		
Lonoke County		Unclassifiable/Attainment.		
Madison County		Unclassifiable/Attainment.		
Marion County		Unclassifiable/Attainment.		
Miller County		Unclassifiable/Attainment.		
Mississippi County		Unclassifiable/Attainment.		
Monroe County		Unclassifiable/Attainment.		
Montgomery County		Unclassifiable/Attainment.		
Nevada County		Unclassifiable/Attainment.		
Newton County		Unclassifiable/Attainment.		
Ouachita County		Unclassifiable/Attainment.		
Perry County		Unclassifiable/Attainment.		
Phillips County		Unclassifiable/Attainment.		
Pike County		Unclassifiable/Attainment.		
Poinsett County		Unclassifiable/Attainment.		
Polk County		Unclassifiable/Attainment.		
Pope County		Unclassifiable/Attainment.		
Prairie County		Unclassifiable/Attainment.		
Pulaski County		Unclassifiable/Attainment.		
Randolph County		Unclassifiable/Attainment.		
St. Francis County		Unclassifiable/Attainment.		
Saline County		Unclassifiable/Attainment.		
Scott County		Unclassifiable/Attainment.		
Searcy County		Unclassifiable/Attainment.		
Sebastian County		Unclassifiable/Attainment.		
Sevier County		Unclassifiable/Attainment.		
Sharp County		Unclassifiable/Attainment.		
Stone County		Unclassifiable/Attainment.		
Union County		Unclassifiable/Attainment.		
Van Buren County		Unclassifiable/Attainment.		
Washington County		Unclassifiable/Attainment.		
White County		Unclassifiable/Attainment.		
Woodruff County		Unclassifiable/Attainment.		
Yell County		Unclassifiable/Attainment.		

[1] This date is July 20, 2012, unless otherwise noted.
[2] Excludes Indian country located in each area, unless otherwise noted.
[3] Includes any Indian country in each county or area, unless otherwise specified.

■ 6. Section 81.305 is amended as follows:

■ a. By revising the table heading for ''California—Ozone (8-Hour Standard)'' to read ''California—1997 8-Hour Ozone NAAQS (Primary and Secondary)''

■ b. By adding a new table entitled ''California—2008 8-Hour Ozone NAAQS (Primary and Secondary)'' following the newly designated table ''California—1997 8-Hour Ozone NAAQS (Primary and Secondary)'' to read as follows:

§ 81.305 California.

* * * * *

CALIFORNIA—2008 8-HOUR OZONE NAAQS

[Primary and secondary]

Designated area	Designation		Classification	
	Date [1]	Type	Date [1]	Type
Calaveras County, CA: [2] Calaveras County		Nonattainment		Marginal.
Chico (Butte County), CA: [2]		Nonattainment		Marginal.
Butte County				
Berry Creek Rancheria of Maidu Indians of California [3]				
Enterprise Rancheria of Maidu Indians of California [3].				
Mechoopda Indian Tribe of Chico Rancheria [3].				
Mooretown Rancheria of Maidu Indians of California [3].				
Imperial County, CA: [2]		Nonattainment		Marginal.
Imperial County				

CALIFORNIA—2008 8-HOUR OZONE NAAQS—Continued

[Primary and secondary]

Designated area	Designation		Classification	
	Date [1]	Type	Date [1]	Type
Quechan Tribe of the Fort Yuma Indian Reservation [3].				
Torres Martinez Desert Cahuilla Indians [3].				
Kern County (Eastern Kern), CA: [2]	.....	Nonattainment	.....	Marginal.
Kern County (part)				
That portion of Kern County (with the exception of that portion in Hydrologic Unit Number 18090205—the Indian Wells Valley) east and south of a line described as follows: Beginning at the Kern-Los Angeles County boundary and running north and east along the northwest boundary of the Rancho La Liebre Land Grant to the point of intersection with the range line common to Range 16 West and Range 17 West, San Bernardino Base and Meridian; north along the range line to the point of intersection with the Rancho El Tejon Land Grant boundary; then southeast, northeast, and northwest along the boundary of the Rancho El Tejon Grant to the northwest corner of Section 3, Township 11 North, Range 17 West; then west 1.2 miles; then north to the Rancho El Tejon Land Grant boundary; then northwest along the Rancho El Tejon line to the southeast corner of Section 34, Township 32 South, Range 30 East, Mount Diablo Base and Meridian; then north to the northwest corner of Section 35, Township 31 South, Range 30 East; then northeast along the boundary of the Rancho El Tejon Land Grant to the southwest corner of Section 18, Township 31 South, Range 31 East; then east to the southeast corner of Section 13, Township 31 South, Range 31 East; then north along the range line common to Range 31 East and Range 32 East, Mount Diablo Base and Meridian, to the northwest corner of Section 6, Township 29 South, Range 32 East; then east to the southwest corner of Section 31, Township 28 South, Range 32 East; then north along the range line common to Range 31 East and Range 32 East to the northwest corner of Section 6, Township 28 South, Range 32 East, then west to the southeast corner of Section 36, Township 27 South, Range 31 East, then north along the range line common to Range 31 East and Range 32 East to the Kern-Tulare County boundary.				
Los Angeles-San Bernardino Counties (West Mojave Desert), CA: [2].	.....	Nonattainment	.....	Severe 15.
Los Angeles County (part)				

CALIFORNIA—2008 8-HOUR OZONE NAAQS—Continued

[Primary and secondary]

Designated area	Designation		Classification	
	Date [1]	Type	Date [1]	Type
That portion of Los Angeles County which lies north and east of a line described as follows: Beginning at the Los Angeles-San Bernardino County boundary and running west along the Township line common to Township 3 North and Township 2 North, San Bernardino Base and Meridian; then north along the range line common to Range 8 West and Range 9 West; then west along the Township line common to Township 4 North and Township 3 North; then north along the range line common to Range 12 West and Range 13 West to the southeast corner of Section 12, Township 5 North and Range 13 West; then west along the south boundaries of Sections 12, 11, 10, 9, 8, and 7, Township 5 North and Range 13 West to the boundary of the Angeles National Forest which is collinear with the range line common to Range 13 West and Range 14 West; then north and west along the Angeles National Forest boundary to the point of intersection with the Township line common to Township 7 North and Township 6 North (point is at the northwest corner of Section 4 in Township 6 North and Range 14 West); then west along the Township line common to Township 7 North and Township 6 North; then north along the range line common to Range 15 West and Range 16 West to the southeast corner of Section 13, Township 7 North and Range 16 West; then along the south boundaries of Sections 13, 14, 15, 16, 17, and 18, Township 7 North and Range 16 West; then north along the range line common to Range 16 West and Range 17 West to the north boundary of the Angeles National Forest (collinear with the Township line common to Township 8 North and Township 7 North); then west and north along the Angeles National Forest boundary to the point of intersection with the south boundary of the Rancho La Liebre Land Grant; then west and north along this land grant boundary to the Los Angeles-Kern County boundary.				
San Bernardino County (part)				
That portion of San Bernardino County which lies north and east of a line described as follows: Beginning at the San Bernardino-Riverside County boundary and running north along the range line common to Range 3 East and Range 2 East, San Bernardino Base and Meridian; then west along the Township line common to Township 3 North and Township 2 North to the San Bernardino-Los Angeles County boundary; and that portion of San Bernardino County which lies south and west of a line described as follows: latitude 35 degrees, 10 minutes north and longitude 115 degrees, 45 minutes west.				
Twenty-Nine Palms Band of Mission Indians of California [3].				
Los Angeles-South Coast Air Basin, CA [2]	.....	Nonattainment	.....	Extreme.
Los Angeles County (part)				

CALIFORNIA—2008 8-HOUR OZONE NAAQS—Continued

[Primary and secondary]

Designated area	Designation		Classification	
	Date [1]	Type	Date [1]	Type
That portion of Los Angeles County which lies south and west of a line described as follows: Beginning at the Los Angeles-San Bernardino County boundary and running west along the Township line common to Township 3 North and Township 2 North San Bernardino Base and Meridian; then north along the range line common to Range 8 West and Range 9 West; then west along the Township line common to Township 4 North and Township 3 North; then north along the range line common to Range 12 West and Range 13 West to the southeast corner of Section 12, Township 5 North and Range 13 West; then west along the south boundaries of Sections 12, 11, 10, 9, 8, and 7, Township 5 North and Range 13 West to the boundary of the Angeles National Forest which is collinear with the range line common to Range 13 West and Range 14 West; then north and west along the Angeles National Forest boundary to the point of intersection with the Township line common to Township 7 North and Township 6 North (point is at the northwest corner of Section 4 in Township 6 North and Range 14 West); then west along the Township line common to Township 7 North and Township 6 North; then north along the range line common to Range 15 West and Range 16 West to the southeast corner of Section 13, Township 7 North and Range 16 West; then along the south boundaries of Sections 13, 14, 15, 16, 17, and 18, Township 7 North and Range 16 West; then north along the range line common to Range 16 West and Range 17 West to the north boundary of the Angeles National Forest (collinear with the Township line common to Township 8 North and Township 7 North); then west and north along the Angeles National Forest boundary to the point of intersection with the south boundary of the Rancho La Liebre Land Grant; then west and north along this land grant boundary to the Los Angeles-Kern County boundary.				
Orange County				
Riverside County (part)				

CALIFORNIA—2008 8-HOUR OZONE NAAQS—Continued

[Primary and secondary]

Designated area	Designation		Classification	
	Date [1]	Type	Date [1]	Type
That portion of Riverside County which lies to the west of a line described as follows: Beginning at the Riverside-San Diego County boundary and running north along the range line common to Range 4 East and Range 3 East, San Bernardino Base and Meridian; then east along the Township line common to Township 8 South and Township 7 South; then north along the range line common to Range 5 East and Range 4 East; then west along the southern boundaries of Sections 25, 26, and 27, Township 7 South, Range 4 East, then North along the west boundaries of Sections 27, 22, 15, 10, and 3 Township 7 South, Range 4 East, then East along the Township line common to Township 6 South and Township 7 South to the southwest corner of Section 34, Township 6 South, Range 4 East; then north along the west boundaries of Sections 34, 27, 22, 15, 10, and 3, Township 6 South, Range 4 East; then west along the Township line common to Township 5 South and Township 6 South; then north along the range line common to Range 4 East and Range 3 East; then west along the south boundaries of Sections 13, 14, 15, 16, 17, and 18, Township 5 South, Range 3 East; then north along the range line common to Range 2 East and Range 3 East; to the Riverside-San Bernardino County line.				
San Bernardino County (part)				
That portion of San Bernardino County which lies south and west of a line described as follows: Beginning at the San Bernardino-Riverside County boundary and running north along the range line common to Range 3 East and Range 2 East, San Bernardino Base and Meridian; then west along the Township line common to Township 3 North and Township 2 North to the San Bernardino-Los Angeles County boundary.				
Cahuilla Band of Mission Indians of the Cahuilla Reservation [3].				
Ramona Band of Cahuilla [3].				
San Manuel Band of Mission Indians [3].				
Soboba Band of Luiseno Indians [3].				
Mariposa County, CA: [2] Mariposa County		Nonattainment		Marginal.
Nevada County (Western part), CA: [2]		Nonattainment		Marginal.
Nevada County (part)				
That portion of Nevada County, which lies west of a line, described as follows: Beginning at the Nevada-Placer County boundary and running north along the western boundaries of Sections 24, 13, 12, 1, Township 17 North, Range 14 East, Mount Diablo Base and Meridian, and Sections 36, 25, 24, 13, 12, Township 18 North, Range 14 East to the Nevada-Sierra County boundary.				
Riverside County (Coachella Valley), CA: [2]		Nonattainment		Severe 15.
Riverside County (part)				

CALIFORNIA—2008 8-HOUR OZONE NAAQS—Continued

[Primary and secondary]

Designated area	Designation		Classification	
	Date [1]	Type	Date [1]	Type
That portion of Riverside County which lies to the east of a line described as follows: Beginning at the Riverside-San Diego County boundary and running north along the range line common to Range 4 East and Range 3 East, San Bernardino Base and Meridian; then east along the Township line common to Township 8 South and Township 7 South; then north along the range line common to Range 5 East and Range 4 East; then west along the Township line common to Township 6 South and Township 7 South to the southwest corner of Section 34, Township 6 South, Range 4 East; then north along the west boundaries of Sections 34, 27, 22, 15, 10, and 3, Township 6 South, Range 4 East; then west along the Township line common to Township 5 South and Township 6 South; then north along the range line common to Range 4 East and Range 3 East; then west along the south boundaries of Sections 13, 14, 15, 16, 17, and 18, Township 5 South, Range 3 East; then north along the range line common to Range 2 East and Range 3 East; to the Riverside-San Bernardino County line. And that portion of Riverside County which lies to the west of a line described as follows: That segment of the southwestern boundary line of hydrologic Unit Number 18100100 within Riverside County.				
Agua Caliente Band of Cahuilla Indians of the Agua Caliente Indian Reservation [3].				
Augustine Band of Cahuilla Indians [3].				
Cabazon Band of Mission Indians [3].				
Santa Rosa Band of Cahuilla Indians [3].				
Torres Martinez Desert Cahuilla Indians [3].				
Twenty-Nine Palms Band of Mission Indians of California [3].				
Sacramento Metro, CA: [2]	.....	Nonattainment	.....	Severe 15.
El Dorado County (part)				
All portions of the county except that portion of El Dorado County within the drainage area naturally tributary to Lake Tahoe including said Lake.				
Placer County (part)				

CALIFORNIA—2008 8-HOUR OZONE NAAQS—Continued

[Primary and secondary]

Designated area	Designation		Classification	
	Date [1]	Type	Date [1]	Type
All portions of the county except that portion of Placer County within the drainage area naturally tributary to Lake Tahoe including said Lake, plus that area in the vicinity of the head of the Truckee River described as follows: Commencing at the point common to the aforementioned drainage area crestline and the line common to Townships 15 North and 16 North, Mount Diablo Base and Meridian, and following that line in a westerly direction to the northwest corner of Section 3, Township 15 North, Range 16 East Mount Diablo Base and Meridian, thence south along the west line of Sections 3 and 10, Township 15 North, Range 16 East, Mount Diablo Base and Meridian, to the intersection with the said drainage area crestline, thence following the said drainage area boundary in a southeasterly, then northeasterly direction to and along the Lake Tahoe Dam, thence following the said drainage area crestline in a northeasterly, then northwesterly direction to the point of beginning.				
Sacramento County				
Solano County (part)				
That portion of Solano County which lies north and east of a line described as follows: Beginning at the intersection of the westerly boundary of Solano County and the ¼ section line running east and west through the center of Section 34; Township 6 North, Range 2 West, Mount Diablo Base and Meridian, thence east along said ¼ section line to the east boundary of Section 36, Township 6 North, Range 2 West, thence south ½ mile and east 2.0 miles, more or less, along the west and south boundary of Los Putos Rancho to the northwest corner of Section 4, Township 5 North, Range 1 West, thence east along a line common to Township 5 North and Township 6 North to the northeast corner of Section 3, Township 5 North, Range 1 East, thence south along section lines to the southeast corner of Section 10, Township 3 North, Range 1 East, thence east along section lines to the south ¼ corner of Section 8, Township 3 North, Range 2 East, thence east to the boundary between Solano and Sacramento Counties.				
Sutter County (part)				
Portion south of a line connecting the northern border of Yolo County to the SW tip of Yuba County and continuing along the southern Yuba County border to Placer County.				
Yolo County				
Shingle Springs Band of Miwok Indians, Shingle Springs Rancheria (Verona Tract) [3].				
United Auburn Indian Community of the Auburn Rancheria of California [3].				
Yocha Dehe Wintun Nation [3].				
San Diego County, CA: [2]	.....	Nonattainment	.....	Marginal.
San Diego County				
Barona Group of Capitan Grande Band of Mission Indians of the Barona Reservation [3].				

CALIFORNIA—2008 8-HOUR OZONE NAAQS—Continued

[Primary and secondary]

Designated area	Designation		Classification	
	Date [1]	Type	Date [1]	Type
Campo Band of Diegueno Mission Indians of the Campo Indian Reservation [3].				
Capitan Grande Band of Diegueno Mission Indians of California [3].				
Ewiiaapaayp Band of Kumayaay Indians [3].				
Iipay Nation of Santa Ysabel [3].				
Inaja Band of Diegueno Mission Indians of the Inaja and Cosmit Reservation [3].				
Jamul Indian Village of California [3].				
La Jolla Band of Luiseno Indians [3].				
La Posta Band of Diegueno Mission Indians of the La Posta Indian Reservation [3].				
Los Coyotes Band of Cahuilla and Cupeno Indians [3].				
Manzanita Band of Diegueno Mission Indians of the Manzanita Reservation [3].				
Mesa Grande Band of Diegueno Mission Indians of the Mesa Grande Reservation [3].				
Pala Band of Luiseno Mission Indians of the Pala Reservation [3].				
Pauma Band of Luiseno Mission Indians of the Pauma and Yuima Reservation [3].				
Rincon Band of Luiseno Mission Indians of the Rincon Reservation [3].				
San Pasqual Band of Diegueno Mission Indians of California [3].				
Sycuan Band of the Kumeyaay Nation [3].				
Viejas (Baron Long) Group of Capitan Grande Band of Mission Indians [3].				
San Francisco Bay Area, CA: [2]		Nonattainment		Marginal.
Alameda County				
Contra Costa County				
Marin County				
Napa County				
San Francisco County				
San Mateo County				
Santa Clara County				
Solano County (part)				
Portion of Solano County which lies south and west of a line described as follows: Beginning at the intersection of the westerly boundary of Solano County and the ¼ section line running east and west through the center of Section 34, T6N, R2W, M.D.B. & M., thence east along said ¼ section line to the east boundary of Section 36, T6N, R2W, thence south ½ mile and east 2.0 miles, more or less, along the west and south boundary of Los Putos Rancho to the northwest corner of Section 4, T5N, R1W, thence east along a line common to T5N and T6N to the northeast corner of Section 3, T5N, R1E, thence south along section lines to the southeast corner of Section 10, T3N, R1E, thence east along section lines to the south ¼ corner of Section 8, T3N, R2E, thence east to the boundary between Solano and Sacramento Counties.				
Sonoma County (part)				

CALIFORNIA—2008 8-HOUR OZONE NAAQS—Continued

[Primary and secondary]

Designated area	Designation		Classification	
	Date [1]	Type	Date [1]	Type
That portion of Sonoma County which lies south and east of a line described as follows: Beginning at the southeasterly corner of the Rancho Estero Americano, being on the boundary line between Marin and Sonoma Counties, California; thence running northerly along the easterly boundary line of said Rancho Estero Americano to the northeasterly corner thereof, being an angle corner in the westerly boundary line of Rancho Canada de Jonive; thence running along said boundary of Rancho Canada de Jonive westerly, northerly and easterly to its intersection with the easterly line of Graton Road; thence running along the easterly and southerly line of Graton Road, northerly and easterly to its intersection with the easterly line of Sullivan Road; thence running northerly along said easterly line of Sullivan Road to the southerly line of Green Valley Road; thence running easterly along the said southerly line of Green Valley Road and easterly along the southerly line of State Highway 116, to the westerly line of Vine Hill Road; thence Running along the westerly and northerly line of Vine Hill Road, northerly and easterly to its intersection with the westerly line of Laguna Road; thence running northerly along the westerly line of Laguna Road and the northerly projection thereof to the northerly line of Trenton Road; thence running westerly along the northerly line of said Trenton Road to the easterly line of Trenton-Healdsburg Road; thence running northerly along said easterly line of Trenton-Healdsburg Road to the easterly line of Eastside Road; thence running northerly along said easterly line of Eastside Road to its intersection with the southerly line of Rancho Sotoyome; thence running easterly along said southerly line of Rancho Sotoyome to its intersection with the Township line common to Townships 8 and 9 North, M.D.M.; thence running easterly along said township line to its intersection with the boundary line between Sonoma and Napa Counties.				
Federated Indians of Graton Rancheria [3]				
Lytton Rancheria of California [3].				
San Joaquin Valley, CA: [2]	.....	Nonattainment	.....	Extreme.
Fresno County				
Kern County (part)				

CALIFORNIA—2008 8-HOUR OZONE NAAQS—Continued

[Primary and secondary]

Designated area	Designation		Classification	
	Date [1]	Type	Date [1]	Type
That portion of Kern County which lies west and north of a line described as follows: Beginning at the Kern-Los Angeles County boundary and running north and east along the northwest boundary of the Rancho La Libre Land Grant to the point of intersection with the range line common to R. 16 W. and R. 17 W., San Bernardino Base and Meridian; north along the range line to the point of intersection with the Rancho El Tejon Land Grant boundary; then southeast, northeast, and northwest along the boundary of the Rancho El Tejon Land Grant to the northwest corner of S. 3, T. 11 N., R. 17 W.; then west 1.2 miles; then north to the Rancho El Tejon Land Grant boundary; then northwest along the Rancho El Tejon line to the southeast corner of S. 34, T. 32 S., R. 30 E., Mount Diablo Base and Meridian; then north to the northwest corner of S. 35, T. 31 S., R. 30 E.; then northeast along the boundary of the Rancho El Tejon Land Grant to the southwest corner of S. 18, T. 31 S., R. 31 E.; then east to the southeast corner of S. 13, T. 31 S., R. 31 E.; then north along the range line common to R. 31 E. and R. 32 E., Mount Diablo Base and Meridian, to the northwest corner of S. 6, T. 29 S., R. 32 E.; then east to the southwest corner of S. 31, T. 28 S., R. 32 E.; then north along the range line common to R. 31 E. and R. 32 E. to the northwest corner of S. 6, T. 28 S., R. 32 E., then west to the southeast corner of S. 36, T. 27 S., R. 31 E., then north along the range line common to R. 31 E. and R. 32 E. to the Kern-Tulare County boundary.				
Kings County				
Madera County				
Merced County				
San Joaquin County				
Stanislaus County				
Tulare County				
Big Sandy Rancheria of Mono Indians of California [3].				
Cold Springs Rancheria of Mono Indians of California [3].				
Northfork Rancheria of Mono Indians of California [3].				
Picayune Rancheria of Chukchansi Indians of California [3].				
Santa Rosa Indian Community of the Santa Rosa Rancheria [3].				
Table Mountain Rancheria of California [3].				
Tule River Indian Tribe of the Tule River Reservation [3].				
San Luis Obispo (Eastern San Luis Obispo), CA: [2]		Nonattainment		Marginal.
San Luis Obispo County (part)				

CALIFORNIA—2008 8-HOUR OZONE NAAQS—Continued

[Primary and secondary]

Designated area	Designation		Classification	
	Date [1]	Type	Date [1]	Type
That portion of San Luis Obispo County that lies east of a line described as follows: Beginning at the San Luis Obispo County/Santa Barbara County boundary and running north along 120 degrees 24 minutes longitude to the intersection with 35 degrees 27 minutes latitude; east along 35 degrees 27 minutes latitude to the intersection with 120 degrees 18 minutes longitude; then north along 120 degrees 18 minutes longitude to the San Luis Obispo County/Monterey County boundary.				
Tuscan Buttes, CA: [2]		Nonattainment		Marginal.
Tehama County (part)				
Those portions of the immediate Tuscan Buttes area at or above 1,800 feet in elevation.				
Ventura County, CA: [2]		Nonattainment		Serious.
Ventura County (part)				
That part of Ventura County excluding the Channel Islands of Anacapa and San Nicolas Islands.				
Morongo Band of Mission Indians [3]		Nonattainment		Serious.
Pechanga Band of Luiseno Mission Indians of the Pechanga Reservation [3].		Nonattainment		Moderate.
Rest of State: [4]				
Alpine, Inyo, and Mono Counties:		Unclassifiable/Attainment.		
Alpine County				
Inyo County				
Mono County				
Amador County		Unclassifiable/Attainment.		
Channel Islands (Ventura County)		Unclassifiable/Attainment.		
Ventura County (part) remainder.				
Colusa County		Unclassifiable/Attainment.		
Del Norte, Humboldt, and Trinity Counties):		Unclassifiable/Attainment.		
Del Norte County				
Humboldt County				
Trinity County				
Nevada County (part) remainder		Unclassifiable/Attainment.		
Glenn County		Unclassifiable/Attainment.		
Kern County (part) remainder		Unclassifiable/Attainment.		
Lake County		Unclassifiable/Attainment.		
Lake Tahoe (El Dorado County Portion):		Unclassifiable/Attainment.		
El Dorado County (part) remainder				
Lake Tahoe (Placer County Portion):		Unclassifiable/Attainment.		
Placer County (part) remainder.				
Lassen County		Unclassifiable/Attainment.		
Mendocino County		Unclassifiable/Attainment.		
Modoc County		Unclassifiable/Attainment.		
Monterey County		Unclassifiable/Attainment.		
Northeastern San Bernardino County and Eastern Riverside County.		Unclassifiable/Attainment.		
San Bernardino County (part) remainder				
Riverside County (part) remainder				
Sonoma County (part) remainder		Unclassifiable/Attainment.		
Sutter County and Yuba County		Unclassifiable/Attainment.		
Sutter County (part) remainder				
Yuba County				
Plumas and Sierra Counties		Unclassifiable/Attainment.		
San Benito County		Unclassifiable/Attainment.		
Santa Barbara County		Unclassifiable/Attainment.		
Santa Cruz County		Unclassifiable/Attainment.		
Shasta County		Unclassifiable/Attainment.		
Siskiyou County		Unclassifiable/Attainment.		
Tehama County (part) remainder		Unclassifiable/Attainment.		
Tuolumne County		Unclassifiable/Attainment.		
San Luis Obispo County (part) remainder		Unclassifiable/Attainment.		

[1] This date is July 20, 2012, unless otherwise noted.

[2] Excludes Indian country located in each area, unless otherwise noted.
[3] Includes Indian country of the tribe listed in this table located in the identified area. Information pertaining to areas of Indian country in this table is intended for CAA planning purposes only and is not an EPA determination of Indian country status or any Indian country boundary. EPA lacks the authority to establish Indian country land status, and is making no determination of Indian country boundaries, in this table.
[4] Includes any Indian country in each county or area, unless otherwise specified.

■ 7. Section 81.306 is amended as follows:

■ a. By revising the table heading for ''Colorado—Ozone (8-Hour Standard)'' to read ''Colorado—1997 8-Hour Ozone NAAQS (Primary and Secondary)''

■ b. By adding a new table entitled ''Colorado—2008 8-Hour Ozone NAAQS (Primary and Secondary)'' following the newly designated table ''Colorado—1997 8-Hour Ozone NAAQS (Primary and Secondary)'' to read as follows:

§ 81.306 Colorado.

* * * * *

COLORADO—2008 8-HOUR OZONE NAAQS

[Primary and secondary]

Designated area	Designation		Classification	
	Date [1]	Type	Date [1]	Type
Denver-Boulder-Greeley-Ft. Collins-Loveland, CO: [2]	.....	Nonattainment	.....	Marginal.
Adams County				
Arapahoe County				
Boulder County				
Broomfield County				
Denver County				
Douglas County				
Jefferson County				
Larimer County (part)				
That portion of the county that lies south of a line described as follows: Beginning at a point on Larimer County's eastern boundary and Weld County's western boundary intersected by 40 degrees, 42 minutes, and 47.1 seconds north latitude, proceed west to a point defined by the intersection of 40 degrees, 42 minutes, 47.1 seconds north latitude and 105 degrees, 29 minutes, and 40.0 seconds west longitude, thence proceed south on 105 degrees, 29 minutes, 40.0 seconds west longitude to the intersection with 40 degrees, 33 minutes and 17.4 seconds north latitude, thence proceed west on 40 degrees, 33 minutes, 17.4 seconds north latitude until this line intersects Larimer County's western boundary and Grand County's eastern boundary.				
Weld County (part)				
That portion of the county that lies south of a line described as follows: Beginning at a point on Weld County's eastern boundary and Logan County's western boundary intersected by 40 degrees, 42 minutes, 47.1 seconds north latitude, proceed west on 40 degrees, 42 minutes, 47.1 seconds north latitude until this line intersects Weld County's western boundary and Larimer County's eastern boundary.				
Southern Ute Indian Tribe of the Southern Ute Reservation [3].	.....	Unclassifiable/Attainment.		
Rest of State and Rest of Indian Country	.....	Unclassifiable/Attainment.		

[1] This date is July 20, 2012, unless otherwise noted.
[2] Excludes Indian country located in each area, unless otherwise noted.
[3] Includes Indian country of the tribe listed in this table located in the identified area. Information pertaining to areas of Indian country in this table is intended for CAA planning purposes only and is not an EPA determination of Indian country status or any Indian country boundary. EPA lacks the authority to establish Indian country land status, and is making no determination of Indian country boundaries, in this table.

■ 8. Section 81.307 is amended as follows:

■ a. By revising the table heading for ''Connecticut—Ozone (8-Hour Standard)'' to read ''Connecticut—1997 8-Hour Ozone NAAQS (Primary and Secondary)''

■ b. By adding a new table entitled ''Connecticut—2008 8-Hour Ozone NAAQS (Primary and Secondary)'' following the newly designated table ''Connecticut—1997 8-Hour Ozone NAAQS (Primary and Secondary)'' to read as follows:

§ 81.307 Connecticut.

* * * * *

CONNECTICUT—2008 8-HOUR OZONE NAAQS

[Primary and secondary]

Designated area	Designation		Classification	
	Date [1]	Type	Date [1]	Type
Greater Connecticut, CT: [2]	.....	Nonattainment	.....	Marginal.
Hartford County				
Litchfield County				
New London County				
Tolland County				
Windham County				
Mashantucket Pequot Tribe of Connecticut [3]				
Mohegan Indian Tribe of Connecticut [3]				
New York-N. New Jersey-Long Island NY-NJ-CT: [2]	.....	Nonattainment	.....	Marginal.
Fairfield County				
Middlesex County				
New Haven County				

[1] This date is July 20, 2012, unless otherwise noted.
[2] Excludes Indian country located in each area, unless otherwise noted.
[3] Includes Indian country of the tribe listed in this table located in the identified area. Information pertaining to areas of Indian country in this table is intended for CAA planning purposes only and is not an EPA determination of Indian country status or any Indian country boundary. EPA lacks the authority to establish Indian country land status, and is making no determination of Indian country boundaries, in this table.

■ 9. Section 81.308 is amended as follows:

■ a. By revising the table heading for ''Delaware—Ozone (8-Hour Standard)'' to read ''Delaware—1997 8-Hour Ozone NAAQS (Primary and Secondary)''

■ b. By adding a new table entitled ''Delaware—2008 8-Hour Ozone NAAQS (Primary and Secondary)'' following the newly designated table ''Delaware—1997 8-Hour Ozone NAAQS (Primary and Secondary)'' to read as follows:

§ 81.308 Delaware.

* * * * *

DELAWARE—2008 8-HOUR OZONE NAAQS

[Primary and secondary]

Designated area	Designation		Classification	
	Date [1]	Type	Date [1]	Type
Philadelphia-Wilmington-Atlantic City, PA-NJ-MD-DE: [2]				
New Castle County	.....	Nonattainment	.....	Marginal.
Seaford: [2]				
Sussex County	.....	Nonattainment	.....	Marginal.
Rest of State: [3]				
Southern Delaware Intrastate AQCR: (remainder)				
Kent County	.....	Unclassifiable/Attainment.		

[1] This date is July 20, 2012, unless otherwise noted.
[2] Excludes Indian country located in each area, unless otherwise noted.
[3] Includes any Indian country in each county or area, unless otherwise specified.

■ 10. Section 81.309 is amended as follows:

■ a. By revising the table heading for ''District of Columbia—Ozone (8-Hour Standard)'' to read ''District of Columbia—1997 8-Hour Ozone NAAQS (Primary and Secondary)''

■ b. By adding a new table entitled ''District of Columbia—2008 8-Hour Ozone NAAQS (Primary and Secondary)'' following the newly designated table ''District of Columbia—1997 8-Hour Ozone NAAQS (Primary and Secondary)'' to read as follows:

§ 81.309 District of Columbia.

* * * * *

DISTRICT OF COLUMBIA—2008 8-HOUR OZONE NAAQS

[Primary and secondary]

Designated area	Designation		Classification	
	Date [1]	Type	Date [1]	Type
Washington, DC-MD-VA: District of Columbia [2]	.....	Nonattainment	.....	Marginal.

[1] This date is July 20, 2012, unless otherwise noted.
[2] Excludes Indian country located in each area, unless otherwise noted.

■ 11. Section 81.310 is amended as follows:

■ a. By revising the table heading for ''Florida—Ozone (8-Hour Standard)'' to read ''Florida—1997 8-Hour Ozone NAAQS (Primary and Secondary)''

■ b. By adding a new table entitled ''Florida—2008 8-Hour Ozone NAAQS (Primary and Secondary)'' following the newly designated table ''Florida—1997 8-Hour Ozone NAAQS (Primary and Secondary)'' to read as follows:

§ 81.310 Florida.

* * * * *

FLORIDA—2008 8-HOUR OZONE NAAQS

[Primary and secondary]

Designated area	Designation		Classification	
	Date [1]	Type	Date [1]	Type
Statewide: [2]	.....	Unclassifiable/Attainment.		
Alachua County				
Baker County				
Bay County				
Bradford County				
Brevard County				
Broward County				
Calhoun County				
Charlotte County				
Citrus County				
Clay County				
Collier County				
Columbia County				
DeSoto County				
Dixie County				
Duval County				
Escambia County				
Flagler County				
Franklin County				
Gadsden County				
Gilchrist County				
Glades County				
Gulf County				
Hamilton County				
Hardee County				
Hendry County				
Hernando County				
Highlands County				
Hillsborough County				
Holmes County				
Indian River County				
Jackson County				
Jefferson County				
Lafayette County				
Lake County				
Lee County				
Leon County				
Levy County				
Liberty County				
Madison County				
Manatee County				
Marion County				
Martin County				
Miami-Dade County				
Monroe County				
Nassau County				
Okaloosa County				
Okeechobee County				
Orange County				
Osceola County				
Palm Beach County				
Pasco County				
Pinellas County				
Polk County				
Putnam County				
St. Johns County				
St. Lucie County				
Santa Rosa County				
Sarasota County				
Seminole County				
Sumter County				
Suwannee County				

FLORIDA—2008 8-HOUR OZONE NAAQS—Continued

[Primary and secondary]

Designated area	Designation		Classification	
	Date [1]	Type	Date [1]	Type
Taylor County				
Union County				
Volusia County				
Wakulla County				
Walton County				
Washington County				

[1] This date is July 20, 2012, unless otherwise noted.
[2] Includes any Indian country located in each county or area, unless otherwise noted.

■ 12. Section 81.311 is amended as follows:

■ a. By revising the table heading for ''Georgia—-Ozone (8-Hour Standard)'' to read ''Georgia—1997 8-Hour Ozone NAAQS (Primary and Secondary)''

■ b. By adding a new table entitled ''Georgia—2008 8-Hour Ozone NAAQS (Primary and Secondary)'' following the newly designated table ''Georgia—1997 8-Hour Ozone NAAQS (Primary and Secondary)'' to read as follows:

§ 81.311 Georgia.

* * * * *

GEORGIA—2008 8-HOUR OZONE NAAQS

[Primary and secondary]

Designated area	Designation		Classification	
	Date [1]	Type	Date [1]	Type
Atlanta, GA: [2]		Nonattainment		Marginal.
Bartow County				
Cherokee County				
Clayton County				
Cobb County				
Coweta County				
DeKalb County				
Douglas County				
Fayette County				
Forsyth County				
Fulton County				
Gwinnett County				
Henry County				
Newton County				
Paulding County				
Rockdale County				
Rest of State: [3]				
Appling County		Unclassifiable/Attainment.		
Atkinson County		Unclassifiable/Attainment.		
Bacon County		Unclassifiable/Attainment.		
Baker County		Unclassifiable/Attainment.		
Baldwin County		Unclassifiable/Attainment.		
Banks County		Unclassifiable/Attainment.		
Barrow County		Unclassifiable/Attainment.		
Ben Hill County		Unclassifiable/Attainment.		
Berrien County		Unclassifiable/Attainment.		
Bibb County		Unclassifiable/Attainment.		
Bleckley County		Unclassifiable/Attainment.		
Brantley County		Unclassifiable/Attainment.		
Brooks County		Unclassifiable/Attainment.		
Bryan County		Unclassifiable/Attainment.		
Bulloch County		Unclassifiable/Attainment.		
Burke County		Unclassifiable/Attainment.		
Butts County		Unclassifiable/Attainment.		
Calhoun County		Unclassifiable/Attainment.		
Camden County		Unclassifiable/Attainment.		
Candler County		Unclassifiable/Attainment.		
Carroll County		Unclassifiable/Attainment.		
Catoosa County		Unclassifiable/Attainment.		
Charlton County		Unclassifiable/Attainment.		
Chatham County		Unclassifiable/Attainment.		
Chattahoochee County		Unclassifiable/Attainment.		
Chattooga County		Unclassifiable/Attainment.		
Clarke County		Unclassifiable/Attainment.		

GEORGIA—2008 8-HOUR OZONE NAAQS—Continued

[Primary and secondary]

Designated area	Designation		Classification	
	Date [1]	Type	Date [1]	Type
Clay County		Unclassifiable/Attainment.		
Clinch County		Unclassifiable/Attainment.		
Coffee County		Unclassifiable/Attainment.		
Colquitt County		Unclassifiable/Attainment.		
Columbia County		Unclassifiable/Attainment.		
Cook County		Unclassifiable/Attainment.		
Crawford County		Unclassifiable/Attainment.		
Crisp County		Unclassifiable/Attainment.		
Dade County		Unclassifiable/Attainment.		
Dawson County		Unclassifiable/Attainment.		
Decatur County		Unclassifiable/Attainment.		
Dodge County		Unclassifiable/Attainment.		
Dooly County		Unclassifiable/Attainment.		
Dougherty County		Unclassifiable/Attainment.		
Early County		Unclassifiable/Attainment.		
Echols County		Unclassifiable/Attainment.		
Effingham County		Unclassifiable/Attainment.		
Elbert County		Unclassifiable/Attainment.		
Emanuel County		Unclassifiable/Attainment.		
Evans County		Unclassifiable/Attainment.		
Fannin County		Unclassifiable/Attainment.		
Floyd County		Unclassifiable/Attainment.		
Franklin County		Unclassifiable/Attainment.		
Gilmer County		Unclassifiable/Attainment.		
Glascock County		Unclassifiable/Attainment.		
Glynn County		Unclassifiable/Attainment.		
Gordon County		Unclassifiable/Attainment.		
Grady County		Unclassifiable/Attainment.		
Greene County		Unclassifiable/Attainment.		
Habersham County		Unclassifiable/Attainment.		
Hall County		Unclassifiable/Attainment.		
Hancock County		Unclassifiable/Attainment.		
Haralson County		Unclassifiable/Attainment.		
Harris County		Unclassifiable/Attainment.		
Hart County		Unclassifiable/Attainment.		
Heard County		Unclassifiable/Attainment.		
Houston County		Unclassifiable/Attainment.		
Irwin County		Unclassifiable/Attainment.		
Jackson County		Unclassifiable/Attainment.		
Jasper County		Unclassifiable/Attainment.		
Jeff Davis County		Unclassifiable/Attainment.		
Jefferson County		Unclassifiable/Attainment.		
Jenkins County		Unclassifiable/Attainment.		
Johnson County		Unclassifiable/Attainment.		
Jones County		Unclassifiable/Attainment.		
Lamar County		Unclassifiable/Attainment.		
Lanier County		Unclassifiable/Attainment.		
Laurens County		Unclassifiable/Attainment.		
Lee County		Unclassifiable/Attainment.		
Liberty County		Unclassifiable/Attainment.		
Lincoln County		Unclassifiable/Attainment.		
Long County		Unclassifiable/Attainment.		
Lowndes County		Unclassifiable/Attainment.		
Lumpkin County		Unclassifiable/Attainment.		
McDuffie County		Unclassifiable/Attainment.		
McIntosh County		Unclassifiable/Attainment.		
Macon County		Unclassifiable/Attainment.		
Madison County		Unclassifiable/Attainment.		
Marion County		Unclassifiable/Attainment.		
Meriwether County		Unclassifiable/Attainment.		
Miller County		Unclassifiable/Attainment.		
Mitchell County		Unclassifiable/Attainment.		
Monroe County		Unclassifiable/Attainment.		
Montgomery County		Unclassifiable/Attainment.		
Morgan County		Unclassifiable/Attainment.		
Murray County		Unclassifiable/Attainment.		
Muscogee County		Unclassifiable/Attainment.		
Oconee County		Unclassifiable/Attainment.		
Oglethorpe County		Unclassifiable/Attainment.		

GEORGIA—2008 8-HOUR OZONE NAAQS—Continued

[Primary and secondary]

Designated area	Designation		Classification	
	Date [1]	Type	Date [1]	Type
Peach County		Unclassifiable/Attainment.		
Pickens County		Unclassifiable/Attainment.		
Pierce County		Unclassifiable/Attainment.		
Pike County		Unclassifiable/Attainment.		
Polk County		Unclassifiable/Attainment.		
Pulaski County		Unclassifiable/Attainment.		
Putnam County		Unclassifiable/Attainment.		
Quitman County		Unclassifiable/Attainment.		
Rabun County		Unclassifiable/Attainment.		
Randolph County		Unclassifiable/Attainment.		
Richmond County		Unclassifiable/Attainment.		
Schley County		Unclassifiable/Attainment.		
Screven County		Unclassifiable/Attainment.		
Seminole County		Unclassifiable/Attainment.		
Spalding County		Unclassifiable/Attainment.		
Stephens County		Unclassifiable/Attainment.		
Stewart County		Unclassifiable/Attainment.		
Sumter County		Unclassifiable/Attainment.		
Talbot County		Unclassifiable/Attainment.		
Taliaferro County		Unclassifiable/Attainment.		
Tattnall County		Unclassifiable/Attainment.		
Taylor County		Unclassifiable/Attainment.		
Telfair County		Unclassifiable/Attainment.		
Terrell County		Unclassifiable/Attainment.		
Thomas County		Unclassifiable/Attainment.		
Tift County		Unclassifiable/Attainment.		
Toombs County		Unclassifiable/Attainment.		
Towns County		Unclassifiable/Attainment.		
Treutlen County		Unclassifiable/Attainment.		
Troup County		Unclassifiable/Attainment.		
Turner County		Unclassifiable/Attainment.		
Twiggs County		Unclassifiable/Attainment.		
Union County		Unclassifiable/Attainment.		
Upson County		Unclassifiable/Attainment.		
Walker County		Unclassifiable/Attainment.		
Walton County		Unclassifiable/Attainment.		
Ware County		Unclassifiable/Attainment.		
Warren County		Unclassifiable/Attainment.		
Washington County		Unclassifiable/Attainment.		
Wayne County		Unclassifiable/Attainment.		
Webster County		Unclassifiable/Attainment.		
Wheeler County		Unclassifiable/Attainment.		
White County		Unclassifiable/Attainment.		
Whitfield County		Unclassifiable/Attainment.		
Wilcox County		Unclassifiable/Attainment.		
Wilkes County		Unclassifiable/Attainment.		
Wilkinson County		Unclassifiable/Attainment.		
Worth County		Unclassifiable/Attainment.		

[1] This date is July 20, 2012, unless otherwise noted.
[2] Excludes Indian country located in each area, unless otherwise noted.
[3] Includes any Indian country in each county or area, unless otherwise specified.

■ 13. Section 81.312 is amended as follows:

■ a. By revising the table heading for ''Hawaii—Ozone (8-Hour Standard)'' to read ''Hawaii—1997 8-Hour Ozone NAAQS (Primary and Secondary)''

■ b. By adding a new table entitled ''Hawaii—2008 8-Hour Ozone NAAQS (Primary and Secondary)'' following the newly designated table ''Hawaii—1997 8-Hour Ozone NAAQS (Primary and Secondary)'' to read as follows:

§ 81.312 Hawaii.

* * * * *

HAWAII—2008 8-HOUR OZONE NAAQS

[Primary and secondary]

Designated area [2]	Designation		Classification	
	Date [1]	Type	Date [1]	Type
Hawaii County		Unclassifiable/Attainment.		
Honolulu County		Unclassifiable/Attainment.		
Kalawao County		Unclassifiable/Attainment.		
Kauai County		Unclassifiable/Attainment.		
Maui County		Unclassifiable/Attainment.		

[1] This date is July 20, 2012, unless otherwise noted.
[2] Includes any Indian country in each county or area, unless otherwise specified.

■ 14. Section 81.313 is amended as follows:

■ a. By revising the table heading for ''Idaho—Ozone (8-Hour Standard)'' to read ''Idaho—1997 8-Hour Ozone NAAQS (Primary and Secondary)''

■ b. By adding a new table entitled ''Idaho—2008 8-Hour Ozone NAAQS (Primary and Secondary)'' following the newly designated table '' Idaho—1997 8-Hour Ozone NAAQS (Primary and Secondary)'' to read as follows:

§ 81.313 Idaho.

* * * * *

IDAHO—2008 8-HOUR OZONE NAAQS

[Primary and secondary]

Designated area [2]	Designation		Classification	
	Date [1]	Type	Date [1]	Type
Statewide and Any Areas of Indian Country		Unclassifiable/Attainment.		

[1] This date is July 20, 2012, unless otherwise noted.

■ 15. Section 81.314 is amended as follows:

■ a. By revising the table heading for ''Illinois—Ozone (8-Hour Standard)'' to read ''Illinois—1997 8-Hour Ozone NAAQS (Primary and Secondary)''

■ b. By adding a new table entitled ''Illinois—2008 8-Hour Ozone NAAQS (Primary and Secondary)'' following the newly designated table ''Illinois—1997 8-Hour Ozone NAAQS (Primary and Secondary)'' to read as follows:

§ 81.314 Illinois.

* * * * *

ILLINOIS—2008 8-HOUR OZONE NAAQS

[Primary and secondary]

Designated area	Designation		Classification	
	Date [1]	Type	Date [1]	Type
St. Louis-St. Charles-Farmington, MO-IL: [2]		Nonattainment		Marginal.
Madison County				
Monroe County				
St. Clair County				
Adams County [3]		Unclassifiable/Attainment.		
Alexander County [3]		Unclassifiable/Attainment.		
Bond County [3]		Unclassifiable/Attainment.		
Boone County [3]		Unclassifiable/Attainment.		
Brown County [3]		Unclassifiable/Attainment.		
Bureau County [3]		Unclassifiable/Attainment.		
Calhoun County [3]		Unclassifiable/Attainment.		
Carroll County [3]		Unclassifiable/Attainment.		
Cass County [3]		Unclassifiable/Attainment.		
Champaign County [3]		Unclassifiable/Attainment.		
Christian County [3]		Unclassifiable/Attainment.		
Clark County [3]		Unclassifiable/Attainment.		
Clay County [3]		Unclassifiable/Attainment.		
Clinton County [3]		Unclassifiable/Attainment.		
Coles County [3]		Unclassifiable/Attainment.		
Crawford County [3]		Unclassifiable/Attainment.		
Cumberland County [3]		Unclassifiable/Attainment.		
DeKalb County [3]		Unclassifiable/Attainment.		
De Witt County [3]		Unclassifiable/Attainment.		
Douglas County [3]		Unclassifiable/Attainment.		
Edgar County [3]		Unclassifiable/Attainment.		

ILLINOIS—2008 8-HOUR OZONE NAAQS—Continued

[Primary and secondary]

Designated area	Designation		Classification	
	Date [1]	Type	Date [1]	Type
Edwards County [3]		Unclassifiable/Attainment.		
Effingham County [3]		Unclassifiable/Attainment.		
Fayette County [3]		Unclassifiable/Attainment.		
Ford County [3]		Unclassifiable/Attainment.		
Franklin County [3]		Unclassifiable/Attainment.		
Fulton County [3]		Unclassifiable/Attainment.		
Gallatin County [3]		Unclassifiable/Attainment.		
Greene County [3]		Unclassifiable/Attainment.		
Hamilton County [3]		Unclassifiable/Attainment.		
Hancock County [3]		Unclassifiable/Attainment.		
Hardin County [3]		Unclassifiable/Attainment.		
Henderson County [3]		Unclassifiable/Attainment.		
Henry County [3]		Unclassifiable/Attainment.		
Iroquois County [3]		Unclassifiable/Attainment.		
Jackson County [3]		Unclassifiable/Attainment.		
Jasper County [3]		Unclassifiable/Attainment.		
Jefferson County [3]		Unclassifiable/Attainment.		
Jersey County [3]		Unclassifiable/Attainment.		
Jo Daviess County [3]		Unclassifiable/Attainment.		
Johnson County [3]		Unclassifiable/Attainment.		
Kankakee County [3]		Unclassifiable/Attainment.		
Knox County [3]		Unclassifiable/Attainment.		
La Salle County [3]		Unclassifiable/Attainment.		
Lawrence County [3]		Unclassifiable/Attainment.		
Lee County [3]		Unclassifiable/Attainment.		
Livingston County [3]		Unclassifiable/Attainment.		
Logan County [3]		Unclassifiable/Attainment.		
McDonough County [3]		Unclassifiable/Attainment.		
McLean County [3]		Unclassifiable/Attainment.		
Macon County [3]		Unclassifiable/Attainment.		
Macoupin County [3]		Unclassifiable/Attainment.		
Marion County [3]		Unclassifiable/Attainment.		
Marshall County [3]		Unclassifiable/Attainment.		
Mason County [3]		Unclassifiable/Attainment.		
Massac County [3]		Unclassifiable/Attainment.		
Menard County [3]		Unclassifiable/Attainment.		
Mercer County [3]		Unclassifiable/Attainment.		
Montgomery County [3]		Unclassifiable/Attainment.		
Morgan County [3]		Unclassifiable/Attainment.		
Moultrie County [3]		Unclassifiable/Attainment.		
Ogle County [3]		Unclassifiable/Attainment.		
Peoria County [3]		Unclassifiable/Attainment.		
Perry County [3]		Unclassifiable/Attainment.		
Piatt County [3]		Unclassifiable/Attainment.		
Pike County [3]		Unclassifiable/Attainment.		
Pope County [3]		Unclassifiable/Attainment.		
Pulaski County [3]		Unclassifiable/Attainment.		
Putnam County [3]		Unclassifiable/Attainment.		
Randolph County [3]		Unclassifiable/Attainment.		
Richland County [3]		Unclassifiable/Attainment.		
Rock Island County [3]		Unclassifiable/Attainment.		
Saline County [3]		Unclassifiable/Attainment.		
Sangamon County [3]		Unclassifiable/Attainment.		
Schuyler County [3]		Unclassifiable/Attainment.		
Scott County [3]		Unclassifiable/Attainment.		
Shelby County [3]		Unclassifiable/Attainment.		
Stark County [3]		Unclassifiable/Attainment.		
Stephenson County [3]		Unclassifiable/Attainment.		
Tazewell County [3]		Unclassifiable/Attainment.		
Union County [3]		Unclassifiable/Attainment.		
Vermilion County [3]		Unclassifiable/Attainment.		
Wabash County [3]		Unclassifiable/Attainment.		
Warren County [3]		Unclassifiable/Attainment.		
Washington County [3]		Unclassifiable/Attainment.		
Wayne County [3]		Unclassifiable/Attainment.		
White County [3]		Unclassifiable/Attainment.		
Whiteside County [3]		Unclassifiable/Attainment.		
Williamson County [3]		Unclassifiable/Attainment.		
Winnebago County [3]		Unclassifiable/Attainment.		

ILLINOIS—2008 8-HOUR OZONE NAAQS—Continued

[Primary and secondary]

Designated area	Designation		Classification	
	Date [1]	Type	Date [1]	Type
Woodford County [3]		Unclassifiable/Attainment.		

[1] This date is July 20, 2012, unless otherwise noted.
[2] Excludes Indian country located in each area, unless otherwise noted.
[3] Includes any Indian country in each county or area, unless otherwise specified.

■ 16. Section 81.315 is amended as follows:

■ a. By revising the table heading for ''Indiana—Ozone (8-Hour Standard)'' to read ''Indiana—1997 8-Hour Ozone NAAQS (Primary and Secondary)''

■ b. By adding a new table entitled ''Indiana—2008 8-Hour Ozone NAAQS (Primary and Secondary)'' following the newly designated table ''Indiana—1997 8-Hour Ozone NAAQS (Primary and Secondary)'' to read as follows:

§ 81.315 Indiana.

* * * * *

INDIANA—2008 8-HOUR OZONE NAAQS

[Primary and secondary]

Designation area	Designation		Classification	
	Date [1]	Type	Date [1]	Type
Cincinnati, OH-KY-IN: [2]		Nonattainment		Marginal.
Dearborn County (part)				
Lawrenceburg Township				
Adams County [3]		Unclassifiable/Attainment.		
Allen County [3]		Unclassifiable/Attainment.		
Bartholomew County [3]		Unclassifiable/Attainment.		
Benton County [3]		Unclassifiable/Attainment.		
Blackford County [3]		Unclassifiable/Attainment.		
Boone County [3]		Unclassifiable/Attainment.		
Brown County [3]		Unclassifiable/Attainment.		
Carroll County [3]		Unclassifiable/Attainment.		
Cass County [3]		Unclassifiable/Attainment.		
Clark County [3]		Unclassifiable/Attainment.		
Clay County [3]		Unclassifiable/Attainment.		
Clinton County [3]		Unclassifiable/Attainment.		
Crawford County [3]		Unclassifiable/Attainment.		
Daviess County [3]		Unclassifiable/Attainment.		
Dearborn County (remainder) [3]		Unclassifiable/Attainment.		
Decatur County [3]		Unclassifiable/Attainment.		
De Kalb County [3]		Unclassifiable/Attainment.		
Delaware County [3]		Unclassifiable/Attainment.		
Dubois County [3]		Unclassifiable/Attainment.		
Elkhart County [3]		Unclassifiable/Attainment.		
Fayette County [3]		Unclassifiable/Attainment.		
Floyd County [3]		Unclassifiable/Attainment.		
Fountain County [3]		Unclassifiable/Attainment.		
Franklin County [3]		Unclassifiable/Attainment.		
Fulton County [3]		Unclassifiable/Attainment.		
Gibson County [3]		Unclassifiable/Attainment.		
Grant County [3]		Unclassifiable/Attainment.		
Greene County [3]		Unclassifiable/Attainment.		
Hamilton County [3]		Unclassifiable/Attainment.		
Hancock County [3]		Unclassifiable/Attainment.		
Harrison County [3]		Unclassifiable/Attainment.		
Hendricks County [3]		Unclassifiable/Attainment.		
Henry County [3]		Unclassifiable/Attainment.		
Howard County [3]		Unclassifiable/Attainment.		
Huntington County [3]		Unclassifiable/Attainment.		
Jackson County [3]		Unclassifiable/Attainment.		
Jay County [3]		Unclassifiable/Attainment.		
Jefferson County [3]		Unclassifiable/Attainment.		
Jennings County [3]		Unclassifiable/Attainment.		
Johnson County [3]		Unclassifiable/Attainment.		
Knox County [3]		Unclassifiable/Attainment.		
Kosciusko County [3]		Unclassifiable/Attainment.		
LaGrange County [3]		Unclassifiable/Attainment.		
La Porte County [3]		Unclassifiable/Attainment.		
Lawrence County [3]		Unclassifiable/Attainment.		

INDIANA—2008 8-HOUR OZONE NAAQS—Continued

[Primary and secondary]

Designation area	Designation		Classification	
	Date [1]	Type	Date [1]	Type
Madison County [3]		Unclassifiable/Attainment.		
Marion County [3]		Unclassifiable/Attainment.		
Marshall County [3]		Unclassifiable/Attainment.		
Martin County [3]		Unclassifiable/Attainment.		
Miami County [3]		Unclassifiable/Attainment.		
Monroe County [3]		Unclassifiable/Attainment.		
Montgomery County [3]		Unclassifiable/Attainment.		
Morgan County [3]		Unclassifiable/Attainment.		
Newton County [3]		Unclassifiable/Attainment.		
Noble County [3]		Unclassifiable/Attainment.		
Ohio County [3]		Unclassifiable/Attainment.		
Orange County [3]		Unclassifiable/Attainment.		
Owen County [3]		Unclassifiable/Attainment.		
Parke County [3]		Unclassifiable/Attainment.		
Perry County [3]		Unclassifiable/Attainment.		
Pike County [3]		Unclassifiable/Attainment.		
Posey County [3]		Unclassifiable/Attainment.		
Pulaski County [3]		Unclassifiable/Attainment.		
Putnam County [3]		Unclassifiable/Attainment.		
Randolph County [3]		Unclassifiable/Attainment.		
Ripley County [3]		Unclassifiable/Attainment.		
Rush County [3]		Unclassifiable/Attainment.		
St Joseph County [3]		Unclassifiable/Attainment.		
Scott County [3]		Unclassifiable/Attainment.		
Shelby County [3]		Unclassifiable/Attainment.		
Spencer County [3]		Unclassifiable/Attainment.		
Starke County [3]		Unclassifiable/Attainment.		
Steuben County [3]		Unclassifiable/Attainment.		
Sullivan County [3]		Unclassifiable/Attainment.		
Switzerland County [3]		Unclassifiable/Attainment.		
Tippecanoe County [3]		Unclassifiable/Attainment.		
Tipton County [3]		Unclassifiable/Attainment.		
Union County [3]		Unclassifiable/Attainment.		
Vanderburgh County [3]		Unclassifiable/Attainment.		
Vermillion County [3]		Unclassifiable/Attainment.		
Vigo County [3]		Unclassifiable/Attainment.		
Wabash County [3]		Unclassifiable/Attainment.		
Warren County [3]		Unclassifiable/Attainment.		
Warrick County [3]		Unclassifiable/Attainment.		
Washington County [3]		Unclassifiable/Attainment.		
Wayne County [3]		Unclassifiable/Attainment.		
Wells County [3]		Unclassifiable/Attainment.		
White County [3]		Unclassifiable/Attainment.		
Whitley County [3]		Unclassifiable/Attainment.		

[1] This date is July 20, 2012, unless otherwise noted.
[2] Excludes Indian country located in each area, unless otherwise noted.
[3] Includes any Indian country in each county or area, unless otherwise specified.

■ 17. Section 81.316 is amended as follows:

■ a. By revising the table heading for ''Iowa—Ozone (8-Hour Standard)'' to read ''Iowa—1997 8-Hour Ozone NAAQS (Primary and Secondary)''

■ b. By adding a new table entitled ''Iowa—2008 8-Hour Ozone NAAQS (Primary and Secondary)'' following the newly designated table ''Iowa—1997 8-Hour Ozone NAAQS (Primary and Secondary)'' to read as follows:

§ 81.316 Iowa.

* * * * *

IOWA—2008 8-HOUR OZONE NAAQS

[Primary and secondary]

Designated area	Designation		Classification	
	Date [1]	Type	Date [1]	Type
Statewide and Any Areas of Indian Country:		Unclassifiable/Attainment.		
Adair County				
Adams County				
Allamakee County				

IOWA—2008 8-HOUR OZONE NAAQS—Continued

[Primary and secondary]

Designated area	Designation		Classification	
	Date [1]	Type	Date [1]	Type
Appanoose County				
Audubon County				
Benton County				
Black Hawk County				
Boone County				
Bremer County				
Buchanan County				
Buena Vista County				
Butler County				
Calhoun County				
Carroll County				
Cass County				
Cedar County				
Cerro Gordo County				
Cherokee County				
Chickasaw County				
Clarke County				
Clay County				
Clayton County				
Clinton County				
Crawford County				
Dallas County				
Davis County				
Decatur County				
Delaware County				
Des Moines County				
Dickinson County				
Dubuque County				
Emmet County				
Fayette County				
Floyd County				
Franklin County				
Fremont County				
Greene County				
Grundy County				
Guthrie County				
Hamilton County				
Hancock County				
Hardin County				
Harrison County				
Henry County				
Howard County				
Humboldt County				
Ida County				
Iowa County				
Jackson County				
Jasper County				
Jefferson County				
Johnson County				
Jones County				
Keokuk County				
Kossuth County				
Lee County				
Linn County				
Louisa County				
Lucas County				
Lyon County				
Madison County				
Mahaska County				
Marion County				
Marshall County				
Mills County				
Mitchell County				
Monona County				
Monroe County				
Montgomery County				
Muscatine County				
O'Brien County				
Osceola County				

IOWA—2008 8-HOUR OZONE NAAQS—Continued

[Primary and secondary]

Designated area	Designation		Classification	
	Date [1]	Type	Date [1]	Type
Page County				
Palo Alto County				
Plymouth County				
Pocahontas County				
Polk County				
Pottawattamie County				
Poweshiek County				
Ringgold County				
Sac County				
Scott County				
Shelby County				
Sioux County				
Story County				
Tama County				
Taylor County				
Union County				
Van Buren County				
Wapello County				
Warren County				
Washington County				
Wayne County				
Webster County				
Winnebago County				
Winneshiek County				
Woodbury County				
Worth County				
Wright County				

[1] This date is July 20, 2012, unless otherwise noted.

■ 18. Section 81.317 is amended as follows:

■ a. By revising the table heading for ''Kansas—Ozone (8-Hour Standard)'' to read ''Kansas—1997 8-Hour Ozone NAAQS (Primary and Secondary)''

■ b. By adding a new table entitled ''Kansas—2008 8-Hour Ozone NAAQS (Primary and Secondary)'' following the newly designated table ''Kansas—1997 8-Hour Ozone NAAQS (Primary and Secondary)'' to read as follows:

§ 81.317 Kansas.

* * * * *

KANSAS—2008 8-HOUR OZONE NAAQS

[Primary and secondary]

Designated area	Designation		Classification	
	Date [1]	Type	Date [1]	Type
Statewide and Any Areas of Indian Country:	.....	Unclassifiable/Attainment.		
Allen County				
Anderson County				
Atchison County				
Barber County				
Barton County				
Bourbon County				
Brown County				
Butler County				
Chase County				
Chautauqua County				
Cherokee County				
Cheyenne County				
Clark County				
Clay County				
Cloud County				
Coffey County				
Comanche County				
Cowley County				
Crawford County				
Decatur County				
Dickinson County				
Doniphan County				

KANSAS—2008 8-HOUR OZONE NAAQS—Continued

[Primary and secondary]

Designated area	Designation		Classification	
	Date [1]	Type	Date [1]	Type
Douglas County				
Edwards County				
Elk County				
Ellis County				
Ellsworth County				
Finney County				
Ford County				
Franklin County				
Geary County				
Gove County				
Graham County				
Grant County				
Gray County				
Greeley County				
Greenwood County				
Hamilton County				
Harper County				
Harvey County				
Haskell County				
Hodgeman County				
Jackson County				
Jefferson County				
Jewell County				
Johnson County				
Kearny County				
Kingman County				
Kiowa County				
Labette County				
Lane County				
Leavenworth County				
Lincoln County				
Linn County				
Logan County				
Lyon County				
McPherson County				
Marion County				
Marshall County				
Meade County				
Miami County				
Mitchell County				
Montgomery County				
Morris County				
Morton County				
Nemaha County				
Neosho County				
Ness County				
Norton County				
Osage County				
Osborne County				
Ottawa County				
Pawnee County				
Phillips County				
Pottawatomie County				
Pratt County				
Rawlins County				
Reno County				
Republic County				
Rice County				
Riley County				
Rooks County				
Rush County				
Russell County				
Saline County				
Scott County				
Sedgwick County				
Seward County				
Shawnee County				
Sheridan County				
Sherman County				

KANSAS—2008 8-HOUR OZONE NAAQS—Continued

[Primary and secondary]

Designated area	Designation		Classification	
	Date [1]	Type	Date [1]	Type
Smith County				
Stafford County				
Stanton County				
Stevens County				
Sumner County				
Thomas County				
Trego County				
Wabaunsee County				
Wallace County				
Washington County				
Wichita County				
Wilson County				
Woodson County				
Wyandotte County				

[1] This date is July 20, 2012, unless otherwise noted.

■ 19. Section 81.318 is amended as follows:

■ a. By revising the table heading for ''Kentucky—Ozone (8-Hour Standard)'' to read ''Kentucky—1997 8-Hour Ozone NAAQS (Primary and Secondary)''

■ b. By adding a new table entitled ''Kentucky—2008 8-Hour Ozone NAAQS (Primary and Secondary)'' following the newly designated table ''Kentucky—1997 8-Hour Ozone NAAQS (Primary and Secondary)'' to read as follows:

§ 81.318 Kentucky.

* * * * *

KENTUCKY—2008 8-HOUR OZONE NAAQS

[Primary and secondary]

Designated area	Designation		Classification	
	Date [1]	Type	Date [1]	Type
Cincinnati, OH-KY-IN: [2]		Nonattainment		Marginal.
Boone County (part)				
2000 Census tracts: 702, 703.01, 703.04, 703.05, 703.06, 703.07, 703.08, 703.09, 704.01, 704.02, 705.01, 705.02, 706.01, 706.03, 706.04				
Campbell County (part)				
2000 Census tracts: 501, 502, 503, 504, 505, 506, 511.01, 511.02, 512, 513, 519.01, 519.03, 519.04, 520.01, 520.02, 521, 522, 523.01, 523.02, 524, 525, 526, 528, 529, 530, 531				
Kenton County (part)				
2000 Census tracts: 603, 607, 609, 610, 611, 612, 613, 614, 616, 636.03, 636.04, 636.05, 636.06, 638, 640, 641, 642, 643, 644, 645, 646, 647, 648, 649, 650, 651, 652, 653, 654, 655.01, 655.02, 656, 657, 658, 659, 668, 669, 670, 671				
Rest of State: [3]				
Adair County		Unclassifiable/Attainment.		
Allen County		Unclassifiable/Attainment.		
Anderson County		Unclassifiable/Attainment.		
Ballard County		Unclassifiable/Attainment.		
Barren County		Unclassifiable/Attainment.		
Bath County		Unclassifiable/Attainment.		
Bell County		Unclassifiable/Attainment.		
Boone County (part)		Unclassifiable/Attainment.		
2000 Census tracts: 706.01 and 706.04				
Bourbon County		Unclassifiable/Attainment.		
Boyd County		Unclassifiable/Attainment.		
Boyle County		Unclassifiable/Attainment.		
Bracken County		Unclassifiable/Attainment.		
Breathitt County		Unclassifiable/Attainment.		
Breckinridge County		Unclassifiable/Attainment.		

KENTUCKY—2008 8-HOUR OZONE NAAQS—Continued

[Primary and secondary]

Designated area	Designation		Classification	
	Date [1]	Type	Date [1]	Type
Bullitt County		Unclassifiable/Attainment O=≥xl≥.		
Butler County		Unclassifiable/Attainment.		
Caldwell County		Unclassifiable/Attainment.		
Calloway County		Unclassifiable/Attainment.		
Campbell County (part)		Unclassifiable/Attainment.		
2000 Census tracts: 520.01 and 520.02				
Carlisle County		Unclassifiable/Attainment.		
Carroll County		Unclassifiable/Attainment.		
Carter County		Unclassifiable/Attainment.		
Casey County		Unclassifiable/Attainment.		
Christian County		Unclassifiable/Attainment.		
Clark County		Unclassifiable/Attainment.		
Clay County		Unclassifiable/Attainment.		
Clinton County		Unclassifiable/Attainment.		
Crittenden County		Unclassifiable/Attainment.		
Cumberland County		Unclassifiable/Attainment.		
Daviess County		Unclassifiable/Attainment.		
Edmonson County		Unclassifiable/Attainment.		
Elliott County		Unclassifiable/Attainment.		
Estill County		Unclassifiable/Attainment.		
Fayette County		Unclassifiable/Attainment.		
Fleming County		Unclassifiable/Attainment.		
Floyd County		Unclassifiable/Attainment.		
Franklin County		Unclassifiable/Attainment.		
Fulton County		Unclassifiable/Attainment.		
Gallatin County		Unclassifiable/Attainment.		
Garrard County		Unclassifiable/Attainment.		
Grant County		Unclassifiable/Attainment.		
Graves County		Unclassifiable/Attainment.		
Grayson County		Unclassifiable/Attainment.		
Green County		Unclassifiable/Attainment.		
Greenup County		Unclassifiable/Attainment.		
Hancock County		Unclassifiable/Attainment.		
Hardin County		Unclassifiable/Attainment.		
Harlan County		Unclassifiable/Attainment.		
Harrison County		Unclassifiable/Attainment.		
Hart County		Unclassifiable/Attainment.		
Henderson County		Unclassifiable/Attainment.		
Henry County		Unclassifiable/Attainment.		
Hickman County		Unclassifiable/Attainment.		
Hopkins County		Unclassifiable/Attainment.		
Jackson County		Unclassifiable/Attainment.		
Jefferson County		Unclassifiable/Attainment.		
Jessamine County		Unclassifiable/Attainment.		
Johnson County		Unclassifiable/Attainment.		
Kenton County (part)		Unclassifiable/Attainment.		
2000 Census tracts: 637.01 and 637.04				
Knott County		Unclassifiable/Attainment.		
Knox County		Unclassifiable/Attainment.		
Larue County		Unclassifiable/Attainment.		
Laurel County		Unclassifiable/Attainment.		
Lawrence County		Unclassifiable/Attainment.		
Lee County		Unclassifiable/Attainment.		
Leslie County		Unclassifiable/Attainment.		
Letcher County		Unclassifiable/Attainment.		
Lewis County		Unclassifiable/Attainment.		
Lincoln County		Unclassifiable/Attainment.		
Livingston County		Unclassifiable/Attainment.		
Logan County		Unclassifiable/Attainment.		
Lyon County		Unclassifiable/Attainment.		
McCracken County		Unclassifiable/Attainment.		
McCreary County		Unclassifiable/Attainment.		
McLean County		Unclassifiable/Attainment.		
Madison County		Unclassifiable/Attainment.		
Magoffin County		Unclassifiable/Attainment.		
Marion County		Unclassifiable/Attainment.		
Marshall County		Unclassifiable/Attainment.		
Martin County		Unclassifiable/Attainment.		

KENTUCKY—2008 8-HOUR OZONE NAAQS—Continued

[Primary and secondary]

Designated area	Designation		Classification	
	Date [1]	Type	Date [1]	Type
Mason County		Unclassifiable/Attainment.		
Meade County		Unclassifiable/Attainment.		
Menifee County		Unclassifiable/Attainment.		
Mercer County		Unclassifiable/Attainment.		
Metcalfe County		Unclassifiable/Attainment.		
Monroe County		Unclassifiable/Attainment.		
Montgomery County		Unclassifiable/Attainment.		
Morgan County		Unclassifiable/Attainment.		
Muhlenberg County		Unclassifiable/Attainment.		
Nelson County		Unclassifiable/Attainment.		
Nicholas County		Unclassifiable/Attainment.		
Ohio County		Unclassifiable/Attainment.		
Oldham County		Unclassifiable/Attainment.		
Owen County		Unclassifiable/Attainment.		
Owsley County		Unclassifiable/Attainment.		
Pendleton County		Unclassifiable/Attainment.		
Perry County		Unclassifiable/Attainment.		
Pike County		Unclassifiable/Attainment.		
Powell County		Unclassifiable/Attainment.		
Pulaski County		Unclassifiable/Attainment.		
Robertson County		Unclassifiable/Attainment.		
Rockcastle County		Unclassifiable/Attainment.		
Rowan County		Unclassifiable/Attainment.		
Russell County		Unclassifiable/Attainment.		
Scott County		Unclassifiable/Attainment.		
Shelby County		Unclassifiable/Attainment.		
Simpson County		Unclassifiable/Attainment.		
Spencer County		Unclassifiable/Attainment.		
Taylor County		Unclassifiable/Attainment.		
Todd County		Unclassifiable/Attainment.		
Trigg County		Unclassifiable/Attainment.		
Trimble County		Unclassifiable/Attainment.		
Union County		Unclassifiable/Attainment.		
Warren County		Unclassifiable/Attainment.		
Washington County		Unclassifiable/Attainment.		
Wayne County		Unclassifiable/Attainment.		
Webster County		Unclassifiable/Attainment.		
Whitley County		Unclassifiable/Attainment.		
Wolfe County		Unclassifiable/Attainment.		
Woodford County		Unclassifiable/Attainment.		

[1] This date is July 20, 2012, unless otherwise noted.
[2] Excludes Indian country located in each area, unless otherwise noted.
[3] Includes any Indian country in each county or area, unless otherwise specified.

■ 20. Section 81.319 is amended as follows:

■ a. By revising the table heading for ''Louisiana—Ozone (8-Hour Standard)'' to read ''Louisiana—1997 8-Hour Ozone NAAQS (Primary and Secondary)''

■ b. By adding a new table entitled ''Louisiana—2008 8-Hour Ozone NAAQS (Primary and Secondary)'' following the newly designated table ''Louisiana—1997 8-Hour Ozone NAAQS (Primary and Secondary)'' to read as follows:

§ 81.319 Louisiana.

* * * * *

LOUISIANA—2008 8-HOUR OZONE NAAQS

[Primary and secondary]

Designated area	Designation		Classification	
	Date [1]	Type	Date [1]	Type
Baton Rouge, LA: [2]		Nonattainment		Marginal.
Ascension Parish				
East Baton Rouge Parish				
Iberville Parish				
Livingston Parish				
West Baton Rouge Parish				
AQCR 019 Monroe-El Dorado Interstate: [3]				
Caldwell Parish		Unclassifiable/Attainment.		

LOUISIANA—2008 8-HOUR OZONE NAAQS—Continued

[Primary and secondary]

Designated area	Designation		Classification	
	Date [1]	Type	Date [1]	Type
Catahoula Parish		Unclassifiable/Attainment.		
Concordia Parish		Unclassifiable/Attainment.		
East Carroll Parish		Unclassifiable/Attainment.		
Franklin Parish		Unclassifiable/Attainment.		
La Salle Parish		Unclassifiable/Attainment.		
Madison Parish		Unclassifiable/Attainment.		
Morehouse Parish		Unclassifiable/Attainment.		
Ouachita Parish		Unclassifiable/Attainment.		
Richland Parish		Unclassifiable/Attainment.		
Tensas Parish		Unclassifiable/Attainment.		
Union Parish		Unclassifiable/Attainment.		
West Carroll Parish		Unclassifiable/Attainment.		
AQCR 022 Shreveport-Texarkana-Tyler Interstate: [3]				
Bienville Parish		Unclassifiable/Attainment.		
Bossier Parish		Unclassifiable/Attainment.		
Caddo Parish		Unclassifiable/Attainment.		
Claiborne Parish		Unclassifiable/Attainment.		
De Soto Parish		Unclassifiable/Attainment.		
Jackson Parish		Unclassifiable/Attainment.		
Lincoln Parish		Unclassifiable/Attainment.		
Natchitoches Parish		Unclassifiable/Attainment		
Red River Parish		Unclassifiable/Attainment.		
Sabine Parish		Unclassifiable/Attainment.		
Webster Parish		Unclassifiable/Attainment.		
Winn Parish		Unclassifiable/Attainment.		
AQCR 106 S. Louisiana-SE. Texas Interstate: (remainder) [3]				
Acadia Parish		Unclassifiable/Attainment.		
Allen Parish		Unclassifiable/Attainment.		
Assumption Parish		Unclassifiable/Attainment.		
Avoyelles Parish		Unclassifiable/Attainment.		
Beauregard Parish		Unclassifiable/Attainment.		
Calcasieu Parish		Unclassifiable/Attainment.		
Cameron Parish		Unclassifiable/Attainment.		
East Feliciana Parish		Unclassifiable/Attainment.		
Evangeline Parish		Unclassifiable/Attainment.		
Grant Parish		Unclassifiable/Attainment.		
Iberia Parish		Unclassifiable/Attainment.		
Jefferson Davis Parish		Unclassifiable/Attainment.		
Jefferson Parish		Unclassifiable/Attainment.		
Lafayette Parish		Unclassifiable/Attainment.		
Lafourche Parish		Unclassifiable/Attainment.		
Orleans Parish		Unclassifiable/Attainment.		
Plaquemines Parish		Unclassifiable/Attainment.		
Pointe Coupee Parish		Unclassifiable/Attainment.		
Rapides Parish		Unclassifiable/Attainment.		
St. Bernard Parish		Unclassifiable/Attainment.		
St. Charles Parish		Unclassifiable/Attainment.		
St. Helena Parish		Unclassifiable/Attainment.		
St. James Parish		Unclassifiable/Attainment.		
St. John the Baptist Parish		Unclassifiable/Attainment.		
St. Landry Parish		Unclassifiable/Attainment.		
St. Martin Parish		Unclassifiable/Attainment.		
St. Mary Parish		Unclassifiable/Attainment.		
St. Tammany Parish		Unclassifiable/Attainment.		
Tangipahoa Parish		Unclassifiable/Attainment.		
Terrebonne Parish		Unclassifiable/Attainment.		
Vermilion Parish		Unclassifiable/Attainment.		
Vernon Parish		Unclassifiable/Attainment.		
Washington Parish		Unclassifiable/Attainment.		
West Feliciana Parish		Unclassifiable/Attainment.		

[1] This date is July 20, 2012, unless otherwise noted.
[2] Excludes Indian country located in each area, unless otherwise noted.
[3] Includes any Indian country in each county or area, unless otherwise specified.

■ 21. Section 81.320 is amended as follows:

■ a. By revising the table heading for ''Maine—Ozone (8-Hour Standard)'' to read ''Maine—1997 8-Hour Ozone NAAQS (Primary and Secondary)''

■ b. By adding a new table entitled ''Maine—2008 8-Hour Ozone NAAQS (Primary and Secondary)'' following the newly designated table ''Maine—1997 8-Hour Ozone NAAQS (Primary and Secondary)'' to read as follows:

§ 81.320 Maine.

* * * * *

MAINE—2008 8-HOUR OZONE NAAQS

[Primary and secondary]

Designated area	Designation		Classification	
	Date [1]	Type	Date [1]	Type
Statewide: [2]		Unclassifiable/Attainment.		
Androscoggin County				
Aroostook County				
Cumberland County				
Franklin County				
Hancock County				
Kennebec County				
Knox County				
Lincoln County				
Oxford County				
Penobscot County				
Piscataquis County				
Sagadahoc County				
Somerset County				
Waldo County				
Washington County				
York County				

[1] This date is July 20, 2012, unless otherwise noted.
[2] Includes any Indian country in each county or area, unless otherwise specified.

■ 22. Section 81.321 is amended as follows:

■ a. By revising the table heading for ''Maryland—Ozone (8-Hour Standard)'' to read ''Maryland—1997 8-Hour Ozone NAAQS (Primary and Secondary)''

■ b. By adding a new table entitled ''Maryland—2008 8-Hour Ozone NAAQS (Primary and Secondary)'' following the newly designated table ''Maryland—1997 8-Hour Ozone NAAQS (Primary and Secondary)'' to read as follows:

§ 81.321 Maryland.

* * * * *

MARYLAND—2008 8-HOUR OZONE NAAQS

[Primary and secondary]

Designated area	Designation		Classification	
	Date [1]	Type	Date [1]	Type
Baltimore, MD: [2]		Nonattainment		Moderate.
Anne Arundel County				
Baltimore County				
Baltimore City				
Carroll County				
Harford County				
Howard County				
Philadelphia-Wilmington-Atlantic City, PA-NJ-MD-DE: [2]		Nonattainment		Marginal.
Cecil County				
Washington, DC-MD-VA: [2]		Nonattainment		Marginal.
Calvert County				
Charles County				
Frederick County				
Montgomery County				
Prince George's County				
AQCR 113 Cumberland-Keyser Interstate [3]		Unclassifiable/Attainment.		
Allegany County				
Garrett County				
Washington County				
AQCR 114 Eastern Shore Interstate: (remainder) [3]		Unclassifiable/Attainment.		
Caroline County				
Dorchester County				
Kent County				
Queen Anne's County				
Somerset County				

MARYLAND—2008 8-HOUR OZONE NAAQS—Continued

[Primary and secondary]

Designated area	Designation		Classification	
	Date [1]	Type	Date [1]	Type
Talbot County Wicomico County Worcester County AQCR 116 Southern Maryland Intrastate: (remainder) [3] St. Mary's County	.....	Unclassifiable/Attainment.		

[1] This date is July 20, 2012, unless otherwise noted.
[2] Excludes Indian country located in each area, unless otherwise noted.
[3] Includes any Indian country in each county or area, unless otherwise specified.

■ 23. Section 81.322 is amended as follows:

■ a. By revising the table heading for ''Massachusetts—Ozone (8-Hour Standard)'' to read ''Massachusetts—1997 8-Hour Ozone NAAQS (Primary and Secondary)''

■ b. By adding a new table entitled ''Massachusetts—2008 8-Hour Ozone NAAQS (Primary and Secondary)'' following the newly designated table ''Massachusetts—1997 8-Hour Ozone NAAQS (Primary and Secondary)'' to read as follows:

§ 81.322 Massachusetts.

* * * * *

MASSACHUSETTS—2008 8-HOUR OZONE NAAQS

[Primary and secondary]

Designated area	Designation		Classification	
	Date [1]	Type	Date [1]	Type
Dukes County, MA: [2] Dukes County Wampanoag Tribe of Gay Head (Aquinnah) of Massachusetts [3]	.....	Nonattainment	.....	Marginal.
Rest of State: [4]				
Barnstable County	.....	Unclassifiable/Attainment.		
Berkshire County	.....	Unclassifiable/Attainment.		
Bristol County	.....	Unclassifiable/Attainment.		
Essex County	.....	Unclassifiable/Attainment.		
Franklin County	.....	Unclassifiable/Attainment.		
Hampden County.	.....	Unclassifiable/Attainment.		
Hampshire County	.....	Unclassifiable/Attainment.		
Middlesex County	.....	Unclassifiable/Attainment.		
Nantucket County	.....	Unclassifiable/Attainment.		
Norfolk County	.....	Unclassifiable/Attainment.		
Plymouth County	.....	Unclassifiable/Attainment.		
Suffolk County	.....	Unclassifiable/Attainment.		
Worcester County	.....	Unclassifiable/Attainment.		

[1] This date is July 20, 2012, unless otherwise noted.
[2] Excludes Indian country located in each area, unless otherwise noted.
[3] Includes Indian country of the tribe listed in this table located in the identified area. Information pertaining to areas of Indian country in this table is intended for CAA planning purposes only and is not an EPA determination of Indian country status or any Indian country boundary. EPA lacks the authority to establish Indian country land status, and is making no determination of Indian country boundaries, in this table.
[4] Includes any Indian country in each county or area, unless otherwise specified.

■ 24. Section 81.323 is amended as follows:

■ a. By revising the table heading for ''Michigan—Ozone (8-Hour Standard)'' to read ''Michigan—1997 8-Hour Ozone NAAQS (Primary and Secondary)''

■ b. By adding a new table entitled ''Michigan—2008 8-Hour Ozone NAAQS (Primary and Secondary)'' following the newly designated table ''Michigan—1997 8-Hour Ozone NAAQS (Primary and Secondary)'' to read as follows:

§ 81.323 Michigan.

* * * * *

MICHIGAN—2008 8-HOUR OZONE NAAQS

[Primary and secondary]

Designated area	Designation		Classification	
	Date [1]	Type	Date [1]	Type
Statewide and Any Areas of Indian Country	.....	Unclassifiable/Attainment.		

[1] This date is July 20, 2012, unless otherwise noted.

■ 25. Section 81.324 is amended as follows:

■ a. By revising the table heading for ''Minnesota—Ozone (8-Hour Standard)'' to read ''Minnesota—1997 8-Hour Ozone NAAQS (Primary and Secondary)''

■ b. By adding a new table entitled ''Minnesota—2008 8-Hour Ozone NAAQS (Primary and Secondary)'' following the newly designated table ''Minnesota—1997 8-Hour Ozone NAAQS (Primary and Secondary)'' to read as follows:

§ 81.324 Minnesota.

* * * * *

MINNESOTA—2008 8-HOUR OZONE NAAQS

[Primary and secondary]

Designated area	Designation		Classification	
	Date [1]	Type	Date [1]	Type
Statewide and Any Areas of Indian Country		Unclassifiable/Attainment.		

[1] This date is July 20, 2012, unless otherwise noted.

■ 26. Section 81.325 is amended as follows:

■ a. By revising the table heading for ''Mississippi—Ozone (8-Hour Standard)'' to read ''Mississippi—1997 8–Hour Ozone NAAQS (Primary and Secondary)''

■ b. By adding a new table entitled ''Mississippi—2008 8-Hour Ozone NAAQS (Primary and Secondary)'' following the existing table ''Mississippi—1997 8-Hour Ozone NAAQS (Primary and Secondary)'' to read as follows:

§ 81.325 Mississippi.

* * * * *

MISSISSIPPI—2008 8-HOUR OZONE NAAQS

[Primary and secondary]

Designated area	Designation		Classification	
	Date [1]	Type	Date [1]	Type
Memphis, TN-MS-AR: [2].				
DeSoto County (part) Portion along MPO Lines		NonAttainment	Marginal.	
Rest of State: [3]				
Adams County		Unclassifiable/Attainment.		
Alcorn County		Unclassifiable/Attainment.		
Amite County		Unclassifiable/Attainment.		
Attala County		Unclassifiable/Attainment.		
Benton County		Unclassifiable/Attainment.		
Bolivar County		Unclassifiable/Attainment.		
Calhoun County		Unclassifiable/Attainment.		
Carroll County		Unclassifiable/Attainment.		
Chickasaw County		Unclassifiable/Attainment.		
Choctaw County		Unclassifiable/Attainment.		
Claiborne County		Unclassifiable/Attainment.		
Clarke County		Unclassifiable/Attainment.		
Clay County		Unclassifiable/Attainment..		
Coahoma County		Unclassifiable/Attainment.		
Copiah County		Unclassifiable/Attainment.		
Covington County		Unclassifiable/Attainment.		
DeSoto County (remainder)		Unclassifiable/Attainment.		
Forrest County		Unclassifiable/Attainment.		
Franklin County		Unclassifiable/Attainment.		
George County		Unclassifiable/Attainment.		
Greene County		Unclassifiable/Attainment.		
Grenada County		Unclassifiable/Attainment.		
Hancock County		Unclassifiable/Attainment.		
Harrison County		Unclassifiable/Attainment.		
Hinds County		Unclassifiable/Attainment.		
Holmes County		Unclassifiable/Attainment.		
Humphreys County		Unclassifiable/Attainment.		
Issaquena County		Unclassifiable/Attainment.		
Itawamba County		Unclassifiable/Attainment.		
Jackson County		Unclassifiable/Attainment.		
Jasper County		Unclassifiable/Attainment.		
Jefferson County		Unclassifiable/Attainment.		
Jefferson Davis County		Unclassifiable/Attainment.		
Jones County		Unclassifiable/Attainment.		
Kemper County		Unclassifiable/Attainment.		
Lafayette County		Unclassifiable/Attainment.		
Lamar County		Unclassifiable/Attainment.		
Lauderdale County		Unclassifiable/Attainment.		
Lawrence County		Unclassifiable/Attainment.		

MISSISSIPPI—2008 8-HOUR OZONE NAAQS—Continued

[Primary and secondary]

Designated area	Designation		Classification	
	Date[1]	Type	Date[1]	Type
Leake County	.....	Unclassifiable/Attainment.		
Lee County	.....	Unclassifiable/Attainment.		
Leflore County	.....	Unclassifiable/Attainment.		
Lincoln County	.....	Unclassifiable/Attainment.		
Lowndes County	.....	Unclassifiable/Attainment.		
Madison County	.....	Unclassifiable/Attainment.		
Marion County	.....	Unclassifiable/Attainment.		
Marshall County	.....	Unclassifiable/Attainment.		
Monroe County	.....	Unclassifiable/Attainment.		
Montgomery County	.....	Unclassifiable/Attainment.		
Neshoba County	.....	Unclassifiable/Attainment.		
Newton County	.....	Unclassifiable/Attainment.		
Noxubee County	.....	Unclassifiable/Attainment.		
Oktibbeha County	.....	Unclassifiable/Attainment.		
Panola County	.....	Unclassifiable/Attainment.		
Pearl River County	.....	Unclassifiable/Attainment.		
Perry County	.....	Unclassifiable/Attainment.		
Pike County	.....	Unclassifiable/Attainment.		
Pontotoc County	.....	Unclassifiable/Attainment.		
Prentiss County	.....	Unclassifiable/Attainment.		
Quitman County	.....	Unclassifiable/Attainment.		
Rankin County	.....	Unclassifiable/Attainment.		
Scott County	.....	Unclassifiable/Attainment.		
Sharkey County	.....	Unclassifiable/Attainment.		
Simpson County	.....	Unclassifiable/Attainment.		
Smith County	.....	Unclassifiable/Attainment.		
Stone County	.....	Unclassifiable/Attainment.		
Sunflower County	.....	Unclassifiable/Attainment.		
Tallahatchie County	.....	Unclassifiable/Attainment.		
Tate County.	.....	Unclassifiable/Attainment.		
Tippah County	.....	Unclassifiable/Attainment.		
Tishomingo County	.....	Unclassifiable/Attainment.		
Tunica County	.....	Unclassifiable/Attainment.		
Union County	.....	Unclassifiable/Attainment.		
Walthall County	.....	Unclassifiable/Attainment.		
Warren County	.....	Unclassifiable/Attainment.		
Washington County	.....	Unclassifiable/Attainment.		
Wayne County	.....	Unclassifiable/Attainment.		
Webster County	.....	Unclassifiable/Attainment.		
Wilkinson County	.....	Unclassifiable/Attainment.		
Winston County	.....	Unclassifiable/Attainment.		
Yalobusha County	.....	Unclassifiable/Attainment.		
Yazoo County	.....	Unclassifiable/Attainment.		

[1] This date is July 20, 2012, unless otherwise noted.
[2] Excludes Indian country located in each area, unless otherwise noted.
[3] Includes any Indian country in each county or area, unless otherwise specified.

■ 27. Section 81.326 is amended as follows:

■ a. By revising the table heading for ''Missouri—Ozone (8-Hour Standard)'' to read ''Missouri—1997 8-Hour Ozone NAAQS (Primary and Secondary)''

■ b. By adding a new table entitled ''Missouri—2008 8-Hour Ozone NAAQS (Primary and Secondary)'' following the newly designated table ''Missouri—1997 8-Hour Ozone NAAQS (Primary and Secondary)'' to read as follows:

§ 81.326 Missouri.

* * * * *

MISSOURI—2008 8-HOUR OZONE NAAQS

[Primary and secondary]

Designated area	Designation		Classification	
	Date[1]	Type	Date[1]	Type
St. Louis-St. Charles-Farmington, MO-IL:[2]	.....	Nonattainment	.....	Marginal.
Franklin County				
Jefferson County				
St. Charles County				
St. Louis County				

MISSOURI—2008 8-HOUR OZONE NAAQS—Continued

[Primary and secondary]

Designated area	Designation		Classification	
	Date [1]	Type	Date [1]	Type
St. Louis City				
Rest of State: [3]		Unclassifiable/Attainment.		
Adair County				
Andrew County				
Atchison County				
Audrain County				
Barry County				
Barton County				
Bates County				
Benton County				
Bollinger County				
Boone County				
Buchanan County				
Butler County				
Caldwell County				
Callaway County				
Camden County				
Cape Girardeau County				
Carter County				
Cass County				
Cedar County				
Chariton County				
Christian County				
Clark County				
Clay County				
Clinton County				
Cole County				
Cooper County				
Crawford County				
Dade County				
Dallas County				
Daviess County				
DeKalb County				
Dent County				
Douglas County				
Dunklin County				
Gasconade County				
Gentry County				
Greene County				
Grundy County				
Harrison County				
Henry County				
Hickory County				
Holt County				
Howard County				
Howell County				
Iron County				
Jackson County				
Jasper County				
Johnson County				
Knox County				
Laclede County				
Lafayette County				
Lawrence County				
Lewis County				
Lincoln County				
Linn County				
Livingston County				
McDonald County				
Macon County				
Madison County				
Maries County				
Marion County				
Mercer County				
Miller County				
Mississippi County				
Moniteau County				
Monroe County				
Montgomery County				

MISSOURI—2008 8-HOUR OZONE NAAQS—Continued

[Primary and secondary]

Designated area	Designation		Classification	
	Date [1]	Type	Date [1]	Type
Morgan County				
New Madrid County				
Newton County				
Nodaway County				
Oregon County				
Osage County				
Ozark County				
Pemiscot County				
Perry County				
Pettis County				
Phelps County				
Pike County				
Platte County				
Polk County				
Pulaski County				
Putnam County				
Ralls County				
Randolph County				
Ray County				
Reynolds County				
Ripley County				
St. Clair County				
St. Genevieve County				
St. Francois County				
Saline County				
Schuyler County				
Scotland County				
Scott County				
Shannon County				
Shelby County				
Stoddard County				
Stone County				
Sullivan County				
Taney County				
Texas County				
Vernon County				
Warren County				
Washington County				
Wayne County				
Webster County				
Worth County				
Wright County				

[1] This date is July 20, 2012, unless otherwise noted.
[2] Excludes Indian country located in each area, unless otherwise noted.
[3] Includes any Indian country in each county or area, unless otherwise specified.

■ 28. Section 81.327 is amended as follows:

■ a. By revising the table heading for ''Montana—Ozone (8-Hour Standard)'' to read ''Montana—1997 8-Hour Ozone NAAQS (Primary and Secondary)''

■ b. By adding a new table entitled ''Montana—2008 8-Hour Ozone NAAQS (Primary and Secondary)'' following the newly designated table ''Montana—1997 8-Hour Ozone NAAQS (Primary and Secondary)'' to read as follows:

§ 81.327 Montana.

* * * * *

MONTANA—2008 8-HOUR OZONE NAAQS

[Primary and secondary]

Designated area	Designation		Classification	
	Date [1]	Type	Date [1]	Type
Statewide and Any Areas of Indian Country	.....	Unclassifiable/Attainment.		

[1] This date is July 20, 2012, unless otherwise noted.

■ 29. Section 81.328 is amended as follows:

■ a. By revising the table heading for ''Nebraska—Ozone (8-Hour Standard)'' to read ''Nebraska—1997 8-Hour Ozone NAAQS (Primary and Secondary)

■ b. By adding a new table entitled ''Nebraska—2008 8-Hour Ozone NAAQS (Primary and Secondary)'' following the newly designated table ''Nebraska—1997 8-Hour Ozone NAAQS (Primary and Secondary)'' to read as follows:

§ 81.328 Nebraska.

* * * * *

NEBRASKA—2008 8-HOUR OZONE NAAQS

[Primary and secondary]

Designated area	Designation		Classification	
	Date [1]	Type	Date [1]	Type
Statewide: [2]	.....	Unclassifiable/Attainment.		
Adams County				
Antelope County				
Arthur County				
Banner County				
Blaine County				
Boone County				
Box Butte County				
Boyd County				
Brown County				
Buffalo County				
Burt County				
Butler County				
Cass County				
Cedar County				
Chase County				
Cherry County				
Cheyenne County				
Clay County				
Colfax County				
Cuming County				
Custer County				
Dakota County				
Dawes County				
Dawson County				
Deuel County				
Dixon County				
Dodge County				
Douglas County				
Dundy County				
Fillmore County				
Franklin County				
Frontier County				
Furnas County				
Gage County				
Garden County				
Garfield County				
Gosper County				
Grant County				
Greeley County				
Hall County				
Hamilton County				
Harlan County				
Hayes County				
Hitchcock County				
Holt County				
Hooker County				
Howard County				
Jefferson County				
Johnson County				
Kearney County				
Keith County				
Keya Paha County				
Kimball County				
Knox County				
Lancaster County				
Lincoln County				
Logan County				
Loup County				
McPherson County				
Madison County				
Merrick County				

NEBRASKA—2008 8-HOUR OZONE NAAQS—Continued

[Primary and secondary]

Designated area	Designation		Classification	
	Date [1]	Type	Date [1]	Type
Morrill County				
Nance County				
Nemaha County				
Nuckolls County				
Otoe County				
Pawnee County				
Perkins County				
Phelps County				
Pierce County				
Platte County				
Polk County				
Red Willow County				
Richardson County				
Rock County				
Saline County				
Sarpy County				
Saunders County				
Scotts Bluff County				
Seward County				
Sheridan County				
Sherman County				
Sioux County				
Stanton County				
Thayer County				
Thomas County				
Thurston County				
Valley County				
Washington County				
Wayne County				
Webster County				
Wheeler County				
York County				

[1] This date is July 20, 2012, unless otherwise noted.
[2] Includes any Indian country in each county or area, unless otherwise specified.

■ 30. Section 81.329 is amended as follows:

■ a. By revising the table heading for ''Nevada—Ozone (8-Hour Standard)'' to read ''Nevada—1997 8-Hour Ozone NAAQS (Primary and Secondary)''

■ b. By adding a new table entitled ''Nevada—2008 8-Hour Ozone NAAQS (Primary and Secondary)'' following the newly designated table ''Nevada—1997 8-Hour Ozone NAAQS (Primary and Secondary)'' to read as follows:

§ 81.329 Nevada.

* * * * *

NEVADA—2008 8-HOUR OZONE NAAQS

[Primary and secondary]

Designated area	Designation		Classification	
	Date [1]	Type	Date [1]	Type
Statewide and Any Areas of Indian Country: [2]	.....	Unclassifiable/Attainment.		

[1] This date is July 20, 2012, unless otherwise noted.
[2] Statewide refers to hydrographic areas as shown on the State of Nevada Division of Water Resources' map titled ''Water Resources and Inter-basin Flows'' (September 1971), as revised to include a division of Carson Desert (area 101) into two areas, a smaller area 101 and area 101A, and a division of Boulder Flat (area 61) into an Upper Unit 61 and a Lower Unit 61. See also 67 FR 12474 (March 19, 2002).

■ 31. Section 81.330 is amended as follows:

■ a. By revising the table heading for ''New Hampshire—Ozone (8-Hour Standard)'' to read ''New Hampshire—1997 8-Hour Ozone NAAQS (Primary and Secondary)

■ b. By adding a new table entitled ''New Hampshire—2008 8-Hour Ozone NAAQS (Primary and Secondary)'' following the newly designated table ''New Hampshire—1997 8-Hour Ozone NAAQS (Primary and Secondary)'' to read as follows:

§ 81.330 New Hampshire.

* * * * *

NEW HAMPSHIRE—2008 8-HOUR OZONE NAAQS

[Primary and secondary]

Designated area	Designation		Classification	
	Date [1]	Type	Date [1]	Type
Statewide: [2]		Unclassifiable/Attainment.		
Belknap County				
Carroll County				
Cheshire County				
Coos County				
Grafton County				
Hillsborough County				
Merrimack County				
Rockingham County				
Strafford County				
Sullivan County				

[1] This date is July 20, 2012, unless otherwise noted.
[2] Includes any Indian country in each county or area, unless otherwise specified.

■ 32. Section 81.331 is amended as follows:

■ a. By revising the table heading for ''New Jersey—Ozone (8-Hour Standard)'' to read ''New Jersey—1997 8-Hour Ozone NAAQS (Primary and Secondary)''

■ b. By adding a new table entitled ''New Jersey—2008 8-Hour Ozone NAAQS (Primary and Secondary)'' following the newly designated table ''New Jersey—1997 8-Hour Ozone NAAQS (Primary and Secondary)'' to read as follows:

§ 81.331 New Jersey.

* * * * *

NEW JERSEY—2008 8-HOUR OZONE NAAQS

[Primary and secondary]

Designated area	Designation		Classification	
	Date [1]	Type	Date [1]	Type
New York-N. New Jersey-Long Island, NY-NJ-CT: [2]		Nonattainment		Marginal.
Bergen County				
Essex County				
Hudson County				
Hunterdon County				
Middlesex County				
Monmouth County				
Morris County				
Passaic County				
Somerset County				
Sussex County				
Union County				
Warren County				
Philadelphia–Wilmington–Atlantic City, PA-NJ-MD-DE: [2].		Nonattainment		Marginal.
Atlantic County				
Burlington County				
Camden County				
Cape May County				
Cumberland County				
Gloucester County				
Mercer County				
Ocean County				
Salem County				

[1] This date is July 20, 2012, unless otherwise noted.
[2] Excludes Indian country located in each area, unless otherwise noted.

■ 33. Section 81.332 is amended as follows:

■ a. By revising the table heading for ''New Mexico—Ozone (8-Hour Standard)'' to read ''New Mexico—1997 8-Hour Ozone NAAQS (Primary and Secondary)''

■ b. By adding a new table entitled ''New Mexico—2008 8-Hour Ozone NAAQS (Primary and Secondary)'' following the newly designated table ''New Mexico—1997 8-Hour Ozone NAAQS (Primary and Secondary)'' to read as follows:

§ 81.332 New Mexico.

* * * * *

NEW MEXICO—2008 8-HOUR OZONE NAAQS

[Primary and secondary]

Designated area [1]	Designation		Classification	
	Date [2]	Type	Date [2]	Type
AQCR 012 New Mexico–Southern Border Intrastate:				
Grant County		Unclassifiable/Attainment.		
Hidalgo County		Unclassifiable/Attainment.		
Luna County		Unclassifiable/Attainment.		
AQCR 014 Four Corners Interstate (see 40 CFR 81.121):				
McKinley County (part)		Unclassifiable/Attainment.		
Río Arriba County (part)		Unclassifiable/Attainment.		
Sandoval County (part)		Unclassifiable/Attainment.		
San Juan County		Unclassifiable/Attainment.		
Valencia County (part)		Unclassifiable/Attainment.		
AQCR 152 Albuquerque–Mid Rio Grande Intrastate (see 40 CFR 81.83):				
Bernalillo County		Unclassifiable/Attainment.		
Sandoval County (part)		Unclassifiable/Attainment.		
Valencia County (part)		Unclassifiable/Attainment.		
AQCR 153 El Paso–Las Cruces–Alamogordo Interstate:				
Doña Ana County		Unclassifiable/Attainment.		
Lincoln County		Unclassifiable/Attainment.		
Otero County		Unclassifiable/Attainment.		
Sierra County		Unclassifiable/Attainment.		
AQCR 154 Northeastern Plains Intrastate:				
Colfax County		Unclassifiable/Attainment.		
Guadalupe County		Unclassifiable/Attainment.		
Harding County		Unclassifiable/Attainment.		
Mora County		Unclassifiable/Attainment.		
San Miguel County		Unclassifiable/Attainment.		
Torrance County		Unclassifiable/Attainment.		
Union County		Unclassifiable/Attainment.		
AQCR 155 Pecos–Permian Basin Intrastate:				
Chaves County		Unclassifiable/Attainment.		
Curry County		Unclassifiable/Attainment.		
De Baca County		Unclassifiable/Attainment.		
Eddy County		Unclassifiable/Attainment.		
Lea County		Unclassifiable/Attainment.		
Quay County		Unclassifiable/Attainment.		
Roosevelt County		Unclassifiable/Attainment.		
AQCR 156 SW Mountains–Augustine Plains (see 40 CFR 81.241):				
Catron County		Unclassifiable/Attainment.		
Cibola County		Unclassifiable/Attainment.		
McKinley County (part)		Unclassifiable/Attainment.		
Socorro County		Unclassifiable/Attainment.		
Valencia County (part)		Unclassifiable/Attainment.		
AQCR 157 Upper Rio Grande Valley Intrastate (see 40 CFR 81.239):				
Los Alamos County		Unclassifiable/Attainment.		
Río Arriba County (part)		Unclassifiable/Attainment.		
Santa Fe County		Unclassifiable/Attainment.		
Taos County		Unclassifiable/Attainment.		

[1] Includes any Indian country in each county or area, unless otherwise specified.
[2] This date is July 20, 2012, unless otherwise noted.

■ 34. Section 81.333 is amended as follows:

■ a. By revising the table heading for ''New York—Ozone (8-Hour Standard)'' to read ''New York—1997 8-Hour Ozone NAAQS (Primary and Secondary)''

■ b. By adding a new table entitled ''New York—2008 8-Hour Ozone NAAQS (Primary and Secondary)'' following the newly designated table ''New York—1997 8-Hour Ozone NAAQS (Primary and Secondary)'' to read as follows:

§ 81.333 New York.

* * * * *

NEW YORK—2008 8-HOUR OZONE NAAQS

[Primary and secondary]

Designated area	Designation		Classification	
	Date [1]	Type	Date [1]	Type
Jamestown, NY: [2] N		NonAttainment	Marginal.	
Chautauqua County				
New York-N. New Jersey-Long Island, NY-NJ-CT: [2]		Nonattainment		Marginal.
Bronx County				
Kings County				
Nassau County				
New York County				
Queens County				
Richmond County				
Rockland County				
Suffolk County				
Westchester County				
Shinnecock Indian Nation [3]				
Albany-Schenectady-Troy Area, NY: [4]		Unclassifiable/Attainment.		
Albany County				
Rensselaer County				
Saratoga County				
Schenectady County				
Schoharie County				
Buffalo-Niagara Falls Area, NY: [4]		Unclassifiable/Attainment.		
Erie County				
Niagara County				
Jefferson County Area, NY: [4]		Unclassifiable/Attainment.		
Jefferson County				
Kingston Area, NY: [4]		Unclassifiable/Attainment.		
Ulster County				
Poughkeepsie Area, NY: [4]		Unclassifiable/Attainment.		
Dutchess County				
Orange County				
Putnam County				
Rochester Area, NY: [4]		Unclassifiable/Attainment.		
Livingston County				
Monroe County				
Ontario County				
Orleans County				
Wayne County				
Syracuse, NY: [4]		Unclassifiable/Attainment.		
Madison County				
Onondaga County				
Oswego County				
Whiteface Mountain: [4]		Unclassifiable/Attainment.		
Essex County (part)				
The portion of Whiteface Mountain above 4500 feet in elevation in Essex County				
Rest of State and Rest of Indian Country		Unclassifiable/Attainment.		

[1] This date is July 20, 2012, unless otherwise noted.
[2] Excludes Indian country located in each area, unless otherwise noted.
[3] Includes Indian country of the tribe listed in this table located in the identified area. Information pertaining to areas of Indian country in this table is intended for CAA planning purposes only and is not an EPA determination of Indian country status or any Indian country boundary. EPA lacks the authority to establish Indian country land status, and is making no determination of Indian country boundaries, in this table.
[4] Includes any Indian country in each county or area, unless otherwise specified.

■ 35. Section 81.334 is amended as follows:

■ a. By revising the table heading for ''North Carolina—Ozone (8-Hour Standard)'' to read ''North Carolina—1997 8-Hour Ozone NAAQS (Primary and Secondary)''

■ b. By adding a new table entitled ''North Carolina—2008 8-Hour Ozone NAAQS (Primary and Secondary)'' following the newly designated table ''North Carolina—1997 8-Hour Ozone NAAQS (Primary and Secondary)'' to read as follows:

§ 81.334 North Carolina.

* * * * *

NORTH CAROLINA—2008 8-HOUR OZONE NAAQS

[Primary and secondary]

Designated area	Designation		Classification	
	Date [1]	Type	Date [1]	Type
Charlotte-Rock Hill, NC-SC: [2]		Nonattainment		Marginal.
Cabarrus County (part)				
Central Cabarrus Township, Georgeville Township, Harrisburg Township, Kannapolis Township, Midland Township, Mount Pleasant Township, New Gilead Township, Odell Township, Poplar Tent Township, Rimertown Township				
Gaston County (part)				
Crowders Mountain Township, Dallas Township, Gastonia Township, Riverbend Township, South Point Township				
Iredell County (part)				
Davidson Township, Coddle Creek Township				
Lincoln County (part)				
Catawba Springs Township, Ironton Township, Lincolnton Township				
Mecklenburg County				
Rowan County (part)				
Atwell Township, China Grove Township, Franklin Township, Litaker Township, Locke Township, Providence Township, Salisbury Township, Steele Township, Unity Township				
Union County (part) Goose Creek Township, Marshville Township, Monroe Township, Sandy Ridge Township, Vance Township				
Rest of State: [3]				
Alamance County		Unclassifiable/Attainment.		
Alexander County		Unclassifiable/Attainment.		
Alleghany County		Unclassifiable/Attainment.		
Anson County		Unclassifiable/Attainment.		
Ashe County		Unclassifiable/Attainment.		
Avery County		Unclassifiable/Attainment.		
Beaufort County		Unclassifiable/Attainment.		
Bertie County		Unclassifiable/Attainment.		
Bladen County		Unclassifiable/Attainment.		
Brunswick County		Unclassifiable/Attainment.		
Buncombe County		Unclassifiable/Attainment.		
Burke County		Unclassifiable/Attainment.		
Cabarrus County (part)				
Gold Hill Township		Unclassifiable/Attainment.		
Caldwell County		Unclassifiable/Attainment.		
Camden County		Unclassifiable/Attainment.		
Carteret County		Unclassifiable/Attainment.		
Caswell County		Unclassifiable/Attainment.		
Catawba County		Unclassifiable/Attainment.		
Chatham County		Unclassifiable/Attainment.		
Cherokee County		Unclassifiable/Attainment.		
Chowan County		Unclassifiable/Attainment.		
Clay County		Unclassifiable/Attainment.		
Cleveland County		Unclassifiable/Attainment.		
Columbus County		Unclassifiable/Attainment.		
Craven County		Unclassifiable/Attainment.		
Cumberland County		Unclassifiable/Attainment.		
Currituck County		Unclassifiable/Attainment.		
Dare County		Unclassifiable/Attainment.		
Davidson County		Unclassifiable/Attainment.		
Davie County		Unclassifiable/Attainment.		
Duplin County		Unclassifiable/Attainment.		
Durham County		Unclassifiable/Attainment.		
Edgecombe County		Unclassifiable/Attainment.		
Forsyth County		Unclassifiable/Attainment.		
Franklin County		Unclassifiable/Attainment.		
Gaston County (part)				
Cherryville. Township		Unclassifiable/Attainment.		
Gates County		Unclassifiable/Attainment.		
Graham County		Unclassifiable/Attainment.		

NORTH CAROLINA—2008 8-HOUR OZONE NAAQS—Continued

[Primary and secondary]

Designated area	Designation		Classification	
	Date [1]	Type	Date [1]	Type
Granville County		Unclassifiable/Attainment.		
Greene County		Unclassifiable/Attainment.		
Guilford County		Unclassifiable/Attainment.		
Halifax County		Unclassifiable/Attainment.		
Harnett County		Unclassifiable/Attainment.		
Haywood County		Unclassifiable/Attainment.		
Henderson County		Unclassifiable/Attainment.		
Hertford County		Unclassifiable/Attainment.		
Hoke County		Unclassifiable/Attainment.		
Hyde County		Unclassifiable/Attainment.		
Iredell County (part)				
Barringer Township		Unclassifiable/Attainment.		
Bethany Township		Unclassifiable/Attainment.		
Chambersburg Township		Unclassifiable/Attainment.		
Concord Township		Unclassifiable/Attainment.		
Cool Springs Township		Unclassifiable/Attainment.		
Eagle Mills Township		Unclassifiable/Attainment.		
Fallstown Township		Unclassifiable/Attainment.		
New Hope Township		Unclassifiable/Attainment.		
Olin Township		Unclassifiable/Attainment.		
Sharpesburg Township		Unclassifiable/Attainment.		
Shiloh Township		Unclassifiable/Attainment.		
Statesville Township		Unclassifiable/Attainment.		
Turnersburg Township		Unclassifiable/Attainment.		
Union Grove Township		Unclassifiable/Attainment.		
Jackson County		Unclassifiable/Attainment.		
Johnston County		Unclassifiable/Attainment.		
Jones County		Unclassifiable/Attainment.		
Lee County		Unclassifiable/Attainment.		
Lenoir County		Unclassifiable/Attainment.		
Lincoln County (part)				
Howard's Creek Township		Unclassifiable/Attainment.		
North Brook Township		Unclassifiable/Attainment.		
Macon County		Unclassifiable/Attainment.		
Madison County		Unclassifiable/Attainment.		
Martin County		Unclassifiable/Attainment.		
McDowell County		Unclassifiable/Attainment.		
Mitchell County		Unclassifiable/Attainment.		
Montgomery County		Unclassifiable/Attainment.		
Moore County		Unclassifiable/Attainment.		
Nash County		Unclassifiable/Attainment.		
New Hanover County		Unclassifiable/Attainment.		
Northampton County		Unclassifiable/Attainment.		
Onslow County		Unclassifiable/Attainment.		
Orange County		Unclassifiable/Attainment.		
Pamlico County		Unclassifiable/Attainment.		
Pasquotank County		Unclassifiable/Attainment.		
Pender County		Unclassifiable/Attainment.		
Perquimans County		Unclassifiable/Attainment.		
Person County		Unclassifiable/Attainment.		
Pitt County		Unclassifiable/Attainment.		
Polk County		Unclassifiable/Attainment.		
Randolph County		Unclassifiable/Attainment.		
Richmond County		Unclassifiable/Attainment.		
Robeson County		Unclassifiable/Attainment.		
Rockingham County		Unclassifiable/Attainment.		
Rowan County (part)				
Cleveland Township		Unclassifiable/Attainment.		
Morgan Township		Unclassifiable/Attainment.		
Mount Ulla Township		Unclassifiable/Attainment.		
Scotch Irish Township		Unclassifiable/Attainment.		
Rutherford County		Unclassifiable/Attainment.		
Sampson County		Unclassifiable/Attainment.		
Scotland County		Unclassifiable/Attainment.		
Stanly County		Unclassifiable/Attainment.		
Stokes County		Unclassifiable/Attainment.		
Surry County		Unclassifiable/Attainment.		
Swain County		Unclassifiable/Attainment.		
Transylvania County		Unclassifiable/Attainment.		

NORTH CAROLINA—2008 8-HOUR OZONE NAAQS—Continued

[Primary and secondary]

Designated area	Designation		Classification	
	Date [1]	Type	Date [1]	Type
Tyrrell County		Unclassifiable/Attainment.		
Union County (part).				
Buford Township		Unclassifiable/Attainment.		
Jackson Township		Unclassifiable/Attainment.		
Lanes Creek Township		Unclassifiable/Attainment.		
New Salem Township		Unclassifiable/Attainment.		
Vance County		Unclassifiable/Attainment.		
Wake County		Unclassifiable/Attainment.		
Warren County		Unclassifiable/Attainment.		
Washington County		Unclassifiable/Attainment.		
Watauga County		Unclassifiable/Attainment.		
Wayne County		Unclassifiable/Attainment.		
Wilkes County		Unclassifiable/Attainment.		
Wilson County		Unclassifiable/Attainment.		
Yadkin County		Unclassifiable/Attainment.		
Yancey County		Unclassifiable/Attainment.		

[1] This date is July 20, 2012, unless otherwise noted.
[2] Excludes Indian country located in each area, unless otherwise noted.
[3] Includes any Indian country in each county or area, unless otherwise specified.

■ 36. Section 81.335 is amended as follows:

■ a. By revising the table heading for ''North Dakota—Ozone (8-Hour Standard)'' to read ''North Dakota—1997 8-Hour Ozone NAAQS (Primary and Secondary)''

■ b. By adding a new table entitled ''North Dakota—2008 8-Hour Ozone NAAQS (Primary and Secondary)'' following the newly designated table ''North Dakota—1997 8-Hour Ozone NAAQS (Primary and Secondary)'' to read as follows:

§ 81.335 North Dakota.

* * * * *

NORTH DAKOTA—2008 8-HOUR OZONE NAAQS

[Primary and secondary]

Designated area	Designation		Classification	
	Date [1]	Type	Date [1]	Type
Statewide and Areas of Indian Country		Unclassifiable/Attainment.		

[1] This date is July 20, 2012, unless otherwise noted.

■ 37. Section 81.336 is amended as follows:

■ a. By revising the table heading for ''Ohio—Ozone (8-Hour Standard)'' to read ''Ohio—1997 8-Hour Ozone NAAQS (Primary and Secondary)''

■ b. By adding a new table entitled ''Ohio—2008 8-Hour Ozone NAAQS (Primary and Secondary)'' following the newly designated table ''Ohio—1997 8-Hour Ozone NAAQS (Primary and Secondary)'' to read as follows:

§ 81.336 Ohio.

* * * * *

OHIO—2008 8-HOUR OZONE NAAQS

[Primary and secondary]

Designated area	Designation		Classification	
	Date [1]	Type	Date [1]	Type
Cincinnati, OH-KY-IN: [2]		Nonattainment		Marginal.
Butler County				
Clermont County				
Clinton County				
Hamilton County				
Warren County				
Cleveland-Akron-Lorain, OH: [2]		Nonattainment		Marginal.
Ashtabula County				
Cuyahoga County				
Geauga County				
Lake County				
Lorain County				
Medina County				

OHIO—2008 8-HOUR OZONE NAAQS—Continued

[Primary and secondary]

Designated area	Designation		Classification	
	Date [1]	Type	Date [1]	Type
Portage County				
Summit County				
Columbus, OH: [2]		Nonattainment		Marginal.
Delaware County				
Fairfield County				
Franklin County				
Knox County				
Licking County				
Madison County				
Rest of State: [3]		Unclassifiable/Attainment.		

[1] This date is July 20, 2012, unless otherwise noted.
[2] Excludes Indian country located in each area, unless otherwise noted.
[3] Includes any Indian country in each county or area, unless otherwise specified.

■ 38. Section 81.337 is amended as follows:

■ a. By revising the table heading for ''Oklahoma—Ozone (8-Hour Standard)'' to read ''Oklahoma—1997 8-Hour Ozone NAAQS (Primary and Secondary)''

■ b. By adding a new table entitled ''Oklahoma—2008 8-Hour Ozone NAAQS (Primary and Secondary)'' following the newly designated table ''Oklahoma—1997 8-Hour Ozone NAAQS (Primary and Secondary)'' to read as follows:

§ 81.337 Oklahoma.

* * * * *

OKLAHOMA—2008 8-HOUR OZONE NAAQS

[Primary and secondary]

Designated area [1]	Designation		Classification	
	Date [2]	Type	Date [2]	Type
Adair County		Unclassifiable/Attainment.		
Alfalfa County		Unclassifiable/Attainment.		
Atoka County		Unclassifiable/Attainment.		
Beaver County		Unclassifiable/Attainment.		
Beckham County		Unclassifiable/Attainment.		
Blaine County		Unclassifiable/Attainment.		
Bryan County		Unclassifiable/Attainment.		
Caddo County		Unclassifiable/Attainment.		
Canadian County		Unclassifiable/Attainment.		
Carter County		Unclassifiable/Attainment.		
Cherokee County		Unclassifiable/Attainment.		
Choctaw County		Unclassifiable/Attainment.		
Cimarron County		Unclassifiable/Attainment.		
Cleveland County		Unclassifiable/Attainment.		
Coal County		Unclassifiable/Attainment.		
Comanche County		Unclassifiable/Attainment.		
Cotton County		Unclassifiable/Attainment.		
Craig County		Unclassifiable/Attainment.		
Creek County		Unclassifiable/Attainment.		
Custer County		Unclassifiable/Attainment.		
Delaware County		Unclassifiable/Attainment.		
Dewey County		Unclassifiable/Attainment.		
Ellis County		Unclassifiable/Attainment.		
Garfield County		Unclassifiable/Attainment.		
Garvin County		Unclassifiable/Attainment.		
Grady County		Unclassifiable/Attainment.		
Grant County		Unclassifiable/Attainment.		
Greer County		Unclassifiable/Attainment.		
Harmon County		Unclassifiable/Attainment.		
Harper County		Unclassifiable/Attainment.		
Haskell County		Unclassifiable/Attainment.		
Hughes County		Unclassifiable/Attainment.		
Jackson County		Unclassifiable/Attainment.		
Jefferson County		Unclassifiable/Attainment.		
Johnston County		Unclassifiable/Attainment.		
Kay County		Unclassifiable/Attainment.		
Kingfisher County		Unclassifiable/Attainment.		
Kiowa County		Unclassifiable/Attainment.		
Latimer County		Unclassifiable/Attainment.		

OKLAHOMA—2008 8-HOUR OZONE NAAQS—Continued

[Primary and secondary]

Designated area [1]	Designation		Classification	
	Date [2]	Type	Date [2]	Type
Le Flore County		Unclassifiable/Attainment.		
Lincoln County		Unclassifiable/Attainment.		
Logan County		Unclassifiable/Attainment.		
Love County		Unclassifiable/Attainment.		
Major County		Unclassifiable/Attainment.		
Marshall County		Unclassifiable/Attainment.		
Mayes County		Unclassifiable/Attainment.		
McClain County		Unclassifiable/Attainment.		
McCurtain County		Unclassifiable/Attainment.		
McIntosh County		Unclassifiable/Attainment.		
Murray County		Unclassifiable/Attainment.		
Muskogee County		Unclassifiable/Attainment.		
Noble County		Unclassifiable/Attainment.		
Nowata County		Unclassifiable/Attainment.		
Okfuskee County		Unclassifiable/Attainment.		
Oklahoma County		Unclassifiable/Attainment.		
Okmulgee County		Unclassifiable/Attainment.		
Osage County		Unclassifiable/Attainment.		
Ottawa County		Unclassifiable/Attainment.		
Pawnee County		Unclassifiable/Attainment.		
Payne County		Unclassifiable/Attainment.		
Pittsburg County		Unclassifiable/Attainment.		
Pontotoc County		Unclassifiable/Attainment.		
Pottawatomie County		Unclassifiable/Attainment.		
Pushmataha County		Unclassifiable/Attainment.		
Roger Mills County		Unclassifiable/Attainment.		
Rogers County		Unclassifiable/Attainment.		
Seminole County		Unclassifiable/Attainment.		
Sequoyah County		Unclassifiable/Attainment.		
Stephens County		Unclassifiable/Attainment.		
Texas County		Unclassifiable/Attainment.		
Tillman County		Unclassifiable/Attainment.		
Tulsa County		Unclassifiable/Attainment.		
Wagoner County		Unclassifiable/Attainment.		
Washington County		Unclassifiable/Attainment.		
Washita County		Unclassifiable/Attainment.		
Woods County		Unclassifiable/Attainment.		
Woodward County		Unclassifiable/Attainment.		

[1] Includes any Indian country in each county or area, unless otherwise specified.
[2] This date is July 20, 2012, unless otherwise noted.

■ 39. Section 81.338 is amended as follows:

■ a. By revising the table heading for ''Oregon—Ozone (8-Hour Standard)'' to read ''Oregon—1997 8-Hour Ozone NAAQS (Primary and Secondary)''

■ b. By adding a new table entitled ''Oregon—2008 8-Hour Ozone NAAQS (Primary and Secondary)'' following the newly designated table ''Oregon—1997 8-Hour Ozone NAAQS (Primary and Secondary)'' to read as follows:

§ 81.338 Oregon.

* * * * *

OREGON—2008 8-HOUR OZONE NAAQS

[Primary and secondary]

Designated area	Designation		Classification	
	Date [1]	Type	Date [1]	Type
Statewide and Any Areas of Indian Country		Unclassifiable/Attainment.		

[1] This date is July 20, 2012, unless otherwise noted.

■ 40. Section 81.339 is amended as follows:

■ a. By revising the table heading for ''Pennsylvania—Ozone (8-Hour Standard)'' to read ''Pennsylvania—1997 8-Hour Ozone NAAQS (Primary and Secondary)''

■ b. By adding a new table entitled ''Pennsylvania—2008 8-Hour Ozone NAAQS (Primary and Secondary)'' following the newly designated table ''Pennsylvania—1997 8-Hour Ozone NAAQS (Primary and Secondary)'' to read as follows:

§ 81.339 Pennsylvania.

* * * * *

PENNSYLVANIA—2008 8-HOUR OZONE NAAQS

[Primary and secondary]

Designated area	Designation		Classification	
	Date [1]	Type	Date [1]	Type
Allentown-Bethlehem-Easton, PA [2]		Nonattainment		Marginal.
Carbon County				
Lehigh County				
Northampton County				
Lancaster, PA [2]		Nonattainment		Marginal.
Lancaster County				
Philadelphia-Wilmington-Atlantic City, PA-NJ-MD-DE [2]		Nonattainment		Marginal.
Bucks County				
Chester County				
Delaware County				
Montgomery County				
Philadelphia County				
Pittsburgh-Beaver Valley, PA [2]		Nonattainment		Marginal.
Allegheny County				
Armstrong County				
Beaver County				
Butler County				
Fayette County				
Washington County				
Westmoreland County				
Reading, PA [2]		Nonattainment		Marginal.
Berks County				
AQCR 151 NE Pennsylvania Intrastate (remainder) [3]				
Bradford County		Unclassifiable/Attainment.		
Lackawanna County		Unclassifiable/Attainment.		
Luzerne County		Unclassifiable/Attainment.		
Monroe County		Unclassifiable/Attainment.		
Pike County		Unclassifiable/Attainment.		
Schuylkill County		Unclassifiable/Attainment.		
Sullivan County		Unclassifiable/Attainment.		
Susquehanna County		Unclassifiable/Attainment.		
Tioga County		Unclassifiable/Attainment.		
Wayne County		Unclassifiable/Attainment.		
Wyoming		Unclassifiable/Attainment.		
AQCR 178 NW Pennsylvania Intrastate [3]				
Cameron County		Unclassifiable/Attainment.		
Clarion County		Unclassifiable/Attainment.		
Clearfield County		Unclassifiable/Attainment.		
Crawford County		Unclassifiable/Attainment.		
Elk County		Unclassifiable/Attainment.		
Erie County		Unclassifiable/Attainment.		
Forest County		Unclassifiable/Attainment.		
Jefferson County		Unclassifiable/Attainment.		
Lawrence County		Unclassifiable/Attainment.		
McKean County		Unclassifiable/Attainment.		
Mercer County		Unclassifiable/Attainment.		
Potter County		Unclassifiable/Attainment.		
Venango County		Unclassifiable/Attainment.		
Warren County		Unclassifiable/Attainment.		
AQCR 195 Central Pennsylvania Intrastate [3]				
Bedford County		Unclassifiable/Attainment.		
Blair County		Unclassifiable/Attainment.		
Cambria County		Unclassifiable/Attainment.		
Centre County		Unclassifiable/Attainment.		
Clinton County		Unclassifiable/Attainment.		
Columbia County		Unclassifiable/Attainment.		
Fulton County		Unclassifiable/Attainment.		
Huntingdon County		Unclassifiable/Attainment.		
Juniata County		Unclassifiable/Attainment.		
Lycoming County		Unclassifiable/Attainment.		
Mifflin County		Unclassifiable/Attainment.		
Montour County		Unclassifiable/Attainment.		
Northumberland County		Unclassifiable/Attainment.		
Snyder County		Unclassifiable/Attainment.		
Somerset County		Unclassifiable/Attainment.		
Union County		Unclassifiable/Attainment.		
AQCR 196 South Central Pennsylvania (remainder) [3]				
Adams County		Unclassifiable/Attainment.		
Cumberland County		Unclassifiable/Attainment.		

PENNSYLVANIA—2008 8-HOUR OZONE NAAQS—Continued

[Primary and secondary]

Designated area	Designation		Classification	
	Date [1]	Type	Date [1]	Type
Dauphin County		Unclassifiable/Attainment.		
Franklin County		Unclassifiable/Attainment.		
Lebanon County		Unclassifiable/Attainment.		
Perry County		Unclassifiable/Attainment.		
York County		Unclassifiable/Attainment.		
AQCR 197 Southwest Pennsylvania (remainder) [3]				
Green County		Unclassifiable/Attainment.		
Indiana County		Unclassifiable/Attainment.		

[1] This date is July 20, 2012, unless otherwise noted.
[2] Excludes Indian country located in each area, unless otherwise noted.
[3] Includes any Indian country in each county or area, unless otherwise specified.

■ 41. Section 81.340 is amended as follows:

■ a. By revising the table heading for ''Rhode Island—Ozone (8-Hour Standard)'' to read ''Rhode Island—1997 8-Hour Ozone NAAQS (Primary and Secondary)''.

■ b. By adding a new table entitled ''Rhode Island—2008 8-Hour Ozone NAAQS (Primary and Secondary)'' following the newly designated table ''Rhode Island—1997 8-Hour Ozone NAAQS (Primary and Secondary)'' to read as follows:

§ 81.340 Rhode Island.

* * * * *

RHODE ISLAND—2008 8-HOUR OZONE NAAQS

[Primary and secondary]

Designated area	Designation		Classification	
	Date [1]	Type	Date [1]	Type
Providence (all of RI), RI: [2]		Unclassifiable/Attainment.		
Bristol County				
Kent County				
Newport County				
Providence County				
Washington County				

[1] This date is July 20, 2012, unless otherwise noted.
[2] Includes any Indian country in each county or area, unless otherwise specified.

■ 42. Section 81.341 is amended as follows:

■ a. By revising the table heading for ''South Carolina—Ozone (8-Hour Standard)'' to read ''South Carolina—1997 8-Hour Ozone NAAQS (Primary and Secondary)''

■ b. By adding a new table entitled ''South Carolina—2008 8-Hour Ozone NAAQS (Primary and Secondary)'' following the newly designated table ''South Carolina—1997 8-Hour Ozone NAAQS (Primary and Secondary)'' to read as follows:

§ 81.341 South Carolina.

* * * * *

SOUTH CAROLINA—2008 8-HOUR OZONE NAAQS

[Primary and secondary]

Designated area	Designation		Classification	
	Date [1]	Type	Date [1]	Type
Charlotte-Rock Hill, NC-SC: [2]		Nonattainment		Marginal.
York County (part)				
Portion along MPO lines				
Catawba Indian Nation (aka Catawba Tribe of South Carolina) [3].		Unclassifiable/Attainment.		
Rest of State: [4]		Unclassifiable/Attainment.		
Abbeville County		Unclassifiable/Attainment.		
Aiken County		Unclassifiable/Attainment.		
Allendale County		Unclassifiable/Attainment.		
Bamberg County		Unclassifiable/Attainment.		
Barnwell County		Unclassifiable/Attainment.		
Beaufort County		Unclassifiable/Attainment.		
Berkeley County		Unclassifiable/Attainment.		
Calhoun County		Unclassifiable/Attainment.		
Charleston County		Unclassifiable/Attainment.		

SOUTH CAROLINA—2008 8-HOUR OZONE NAAQS—Continued

[Primary and secondary]

Designated area	Designation		Classification	
	Date [1]	Type	Date [1]	Type
Cherokee County		Unclassifiable/Attainment.		
Chester County		Unclassifiable/Attainment.		
Chesterfield County		Unclassifiable/Attainment.		
Clarendon County		Unclassifiable/Attainment.		
Colleton County		Unclassifiable/Attainment.		
Darlington County		Unclassifiable/Attainment.		
Dillon County		Unclassifiable/Attainment.		
Dorchester County		Unclassifiable/Attainment.		
Edgefield County		Unclassifiable/Attainment.		
Fairfield County		Unclassifiable/Attainment.		
Florence County		Unclassifiable/Attainment.		
Georgetown County		Unclassifiable/Attainment.		
Greenwood County		Unclassifiable/Attainment.		
Hampton County		Unclassifiable/Attainment.		
Horry County		Unclassifiable/Attainment.		
Jasper County		Unclassifiable/Attainment.		
Kershaw County		Unclassifiable/Attainment.		
Lancaster County		Unclassifiable/Attainment.		
Laurens County		Unclassifiable/Attainment.		
Lee County		Unclassifiable/Attainment.		
Lexington County		Unclassifiable/Attainment.		
Marion County		Unclassifiable/Attainment.		
Marlboro County		Unclassifiable/Attainment.		
McCormick County		Unclassifiable/Attainment.		
Newberry County		Unclassifiable/Attainment.		
Oconee County		Unclassifiable/Attainment.		
Orangeburg County		Unclassifiable/Attainment.		
Pickens County		Unclassifiable/Attainment.		
Richland County		Unclassifiable/Attainment.		
Saluda County		Unclassifiable/Attainment.		
Sumter County		Unclassifiable/Attainment.		
Union County		Unclassifiable/Attainment.		
Williamsburg County		Unclassifiable/Attainment.		
York County (part) remainder		Unclassifiable/Attainment.		

[1] This date is July 20, 2012, unless otherwise noted.
[2] Excludes Indian country located in each area, unless otherwise noted.
[3] Includes Indian country of the tribe listed in this table located in the identified area. Information pertaining to areas of Indian country in this table is intended for CAA planning purposes only and is not an EPA determination of Indian country status or any Indian country boundary. EPA lacks the authority to establish Indian country land status, and is making no determination of Indian country boundaries, in this table.
[4] Includes any Indian country in each county or area, unless otherwise specified.

■ 43. Section 81.342 is amended as follows:

■ a. By revising the table heading for ''South Dakota—Ozone (8-Hour Standard)'' to read ''South Dakota—1997 8-Hour Ozone NAAQS (Primary and Secondary)''

■ b. By adding a new table entitled ''South Dakota—2008 8-Hour Ozone NAAQS (Primary and Secondary)'' following the newly designated table ''South Dakota—1997 8-Hour Ozone NAAQS (Primary and Secondary)'' to read as follows:

§ 81.342 South Dakota.

* * * * *

SOUTH DAKOTA—2008 8-HOUR OZONE NAAQS

[Primary and secondary]

Designated area	Designation		Classification	
	Date [1]	Type	Date [1]	Type
Statewide and Any Areas of Indian Country:		Unclassifiable/Attainment.		

[1] This date is July 20, 2012, unless otherwise noted.

■ 44. Section 81.343 is amended as follows:

■ a. By revising the table heading for ''Tennessee—Ozone (8-Hour Standard)'' to read ''Tennessee—1997 8-Hour Ozone NAAQS (Primary and Secondary)''

■ b. By adding a new table entitled ''Tennessee—2008 8-Hour Ozone NAAQS (Primary and Secondary)'' following the newly designated table ''Tennessee—1997 8-Hour Ozone NAAQS (Primary and Secondary)'' to read as follows:

§ 81.343 Tennessee.

* * * * *

TENNESSEE—2008 8-HOUR OZONE NAAQS

[Primary and secondary]

Designated area	Designation		Classification	
	Date [1]	Type	Date [1]	Type
Knoxville, TN: [2]		Nonattainment		Marginal.
Anderson County (part)				
2000 Census tracts: 202, 213.02				
Blount County				
Knox County				
Memphis, TN-MS-AR: [2]		Nonattainment		Marginal.
Shelby County				
Rest of State: [3]		Unclassifiable/Attainment.		
Anderson County (part) remainder		Unclassifiable/Attainment.		
Bedford County		Unclassifiable/Attainment.		
Benton County		Unclassifiable/Attainment.		
Bledsoe County		Unclassifiable/Attainment.		
Bradley County		Unclassifiable/Attainment.		
Campbell County		Unclassifiable/Attainment.		
Cannon County		Unclassifiable/Attainment.		
Carroll County		Unclassifiable/Attainment.		
Carter County		Unclassifiable/Attainment.		
Cheatham County		Unclassifiable/Attainment.		
Chester County		Unclassifiable/Attainment.		
Claiborne County		Unclassifiable/Attainment.		
Clay County		Unclassifiable/Attainment.		
Cocke County		Unclassifiable/Attainment.		
Coffee County		Unclassifiable/Attainment.		
Crockett County		Unclassifiable/Attainment.		
Cumberland County		Unclassifiable/Attainment.		
Davidson County		Unclassifiable/Attainment.		
Decatur County		Unclassifiable/Attainment.		
DeKalb County		Unclassifiable/Attainment.		
Dickson County		Unclassifiable/Attainment.		
Dyer County		Unclassifiable/Attainment.		
Fayette County		Unclassifiable/Attainment.		
Fentress County		Unclassifiable/Attainment.		
Franklin County		Unclassifiable/Attainment.		
Gibson County		Unclassifiable/Attainment.		
Giles County		Unclassifiable/Attainment.		
Grainger County		Unclassifiable/Attainment.		
Greene County		Unclassifiable/Attainment.		
Grundy County		Unclassifiable/Attainment.		
Hamblen County		Unclassifiable/Attainment.		
Hamilton County		Unclassifiable/Attainment.		
Hancock County		Unclassifiable/Attainment.		
Hardeman County		Unclassifiable/Attainment.		
Hardin County		Unclassifiable/Attainment.		
Hawkins County		Unclassifiable/Attainment.		
Haywood County		Unclassifiable/Attainment.		
Henderson County		Unclassifiable/Attainment.		
Henry County		Unclassifiable/Attainment.		
Hickman County		Unclassifiable/Attainment.		
Houston County		Unclassifiable/Attainment.		
Humphreys County		Unclassifiable/Attainment.		
Jackson County		Unclassifiable/Attainment.		
Jefferson County		Unclassifiable/Attainment.		
Johnson County		Unclassifiable/Attainment.		
Lake County		Unclassifiable/Attainment.		
Lauderdale County		Unclassifiable/Attainment.		
Lawrence County		Unclassifiable/Attainment.		
Lewis County		Unclassifiable/Attainment.		
Lincoln County		Unclassifiable/Attainment.		
Loudon County		Unclassifiable/Attainment.		
McMinn County		Unclassifiable/Attainment.		
McNairy County		Unclassifiable/Attainment.		
Macon County		Unclassifiable/Attainment.		
Madison County		Unclassifiable/Attainment.		
Marion County		Unclassifiable/Attainment.		
Marshall County		Unclassifiable/Attainment.		
Maury County		Unclassifiable/Attainment.		
Meigs County		Unclassifiable/Attainment.		
Monroe County		Unclassifiable/Attainment.		
Montgomery County		Unclassifiable/Attainment.		

TENNESSEE—2008 8-HOUR OZONE NAAQS—Continued

[Primary and secondary]

Designated area	Designation		Classification	
	Date [1]	Type	Date [1]	Type
Moore County		Unclassifiable/Attainment.		
Morgan County		Unclassifiable/Attainment.		
Obion County		Unclassifiable/Attainment.		
Overton County		Unclassifiable/Attainment.		
Perry County		Unclassifiable/Attainment.		
Pickett County		Unclassifiable/Attainment.		
Polk County		Unclassifiable/Attainment.		
Putnam County		Unclassifiable/Attainment.		
Rhea County		Unclassifiable/Attainment.		
Roane County		Unclassifiable/Attainment.		
Robertson County		Unclassifiable/Attainment.		
Rutherford County		Unclassifiable/Attainment.		
Scott County		Unclassifiable/Attainment.		
Sequatchie County		Unclassifiable/Attainment.		
Sevier County		Unclassifiable/Attainment.		
Smith County		Unclassifiable/Attainment.		
Stewart County		Unclassifiable/Attainment.		
Sullivan County		Unclassifiable/Attainment.		
Sumner County		Unclassifiable/Attainment.		
Tipton County		Unclassifiable/Attainment.		
Trousdale County		Unclassifiable/Attainment.		
Unicoi County		Unclassifiable/Attainment.		
Union County		Unclassifiable/Attainment.		
Van Buren County		Unclassifiable/Attainment.		
Warren County		Unclassifiable/Attainment.		
Washington County		Unclassifiable/Attainment.		
Wayne County		Unclassifiable/Attainment.		
Weakley County		Unclassifiable/Attainment.		
White County		Unclassifiable/Attainment.		
Williamson County		Unclassifiable/Attainment.		
Wilson County		Unclassifiable/Attainment.		

[1] This date is July 20, 2012, unless otherwise noted.
[2] Excludes Indian country located in each area, unless otherwise noted.
[3] Includes any Indian country in each county or area, unless otherwise specified.

■ 45. Section 81.344 is amended as follows:

■ a. By revising the table heading for ''Texas—Ozone (8-Hour Standard)'' to read ''Texas—1997 8-Hour Ozone NAAQS (Primary and Secondary)''

■ b. By adding a new table entitled ''Texas—2008 8-Hour Ozone NAAQS (Primary and Secondary)'' following the newly designated table ''Texas—1997 8-Hour Ozone NAAQS (Primary and Secondary)'' to read as follows:

§ 81.344 Texas.

* * * * *

TEXAS—2008 8-HOUR OZONE NAAQS

[Primary and secondary]

Designated area	Designation		Classification	
	Date [1]	Type	Date [1]	Type
Dallas-Fort Worth, TX: [2]		Nonattainment		Moderate.
Collin County				
Dallas County				
Denton County				
Ellis County				
Johnson County				
Kaufman County				
Parker County				
Rockwall County				
Tarrant County				
Wise County				
Houston-Galveston-Brazoria, TX: [2]		Nonattainment		Marginal.
Brazoria County				
Chambers County				
Fort Bend County				
Galveston County				
Harris County				

TEXAS—2008 8-HOUR OZONE NAAQS—Continued

[Primary and secondary]

Designated area	Designation		Classification	
	Date [1]	Type	Date [1]	Type
Liberty County				
Montgomery County				
Waller County				
Rest of State: [3]				
Anderson County		Unclassifiable/Attainment.		
Andrews County		Unclassifiable/Attainment.		
Angelina County		Unclassifiable/Attainment.		
Aransas County		Unclassifiable/Attainment.		
Archer County		Unclassifiable/Attainment.		
Armstrong County		Unclassifiable/Attainment.		
Atascosa County		Unclassifiable/Attainment.		
Austin County		Unclassifiable/Attainment.		
Bailey County		Unclassifiable/Attainment.		
Bandera County		Unclassifiable/Attainment.		
Bastrop County		Unclassifiable/Attainment.		
Baylor County		Unclassifiable/Attainment.		
Bee County		Unclassifiable/Attainment.		
Bell County		Unclassifiable/Attainment.		
Bexar County		Unclassifiable/Attainment.		
Blanco County		Unclassifiable/Attainment.		
Borden County		Unclassifiable/Attainment.		
Bosque County		Unclassifiable/Attainment.		
Bowie County		Unclassifiable/Attainment.		
Brazos County		Unclassifiable/Attainment.		
Brewster County		Unclassifiable/Attainment.		
Briscoe County		Unclassifiable/Attainment.		
Brooks County		Unclassifiable/Attainment.		
Brown County		Unclassifiable/Attainment.		
Burleson County		Unclassifiable/Attainment.		
Burnet County		Unclassifiable/Attainment.		
Caldwell County		Unclassifiable/Attainment.		
Calhoun County		Unclassifiable/Attainment.		
Callahan County		Unclassifiable/Attainment.		
Cameron County		Unclassifiable/Attainment.		
Camp County		Unclassifiable/Attainment.		
Carson County		Unclassifiable/Attainment.		
Cass County		Unclassifiable/Attainment.		
Castro County		Unclassifiable/Attainment.		
Cherokee County		Unclassifiable/Attainment.		
Childress County		Unclassifiable/Attainment.		
Clay County		Unclassifiable/Attainment.		
Cochran County		Unclassifiable/Attainment.		
Coke County		Unclassifiable/Attainment.		
Coleman County		Unclassifiable/Attainment.		
Collingsworth County		Unclassifiable/Attainment.		
Colorado County		Unclassifiable/Attainment.		
Comal County		Unclassifiable/Attainment.		
Comanche County		Unclassifiable/Attainment.		
Concho County		Unclassifiable/Attainment.		
Cooke County		Unclassifiable/Attainment.		
Coryell County		Unclassifiable/Attainment.		
Cottle County		Unclassifiable/Attainment.		
Crane County		Unclassifiable/Attainment.		
Crockett County		Unclassifiable/Attainment.		
Crosby County		Unclassifiable/Attainment.		
Culberson County		Unclassifiable/Attainment.		
Dallam County		Unclassifiable/Attainment.		
Dawson County		Unclassifiable/Attainment.		
Deaf Smith County		Unclassifiable/Attainment.		
Delta County		Unclassifiable/Attainment.		
DeWitt County		Unclassifiable/Attainment.		
Dickens County		Unclassifiable/Attainment.		
Dimmit County		Unclassifiable/Attainment.		
Donley County		Unclassifiable/Attainment.		
Duval County		Unclassifiable/Attainment.		
Eastland County		Unclassifiable/Attainment.		
Ector County		Unclassifiable/Attainment.		
Edwards County		Unclassifiable/Attainment.		
El Paso County		Unclassifiable/Attainment.		

TEXAS—2008 8-HOUR OZONE NAAQS—Continued

[Primary and secondary]

Designated area	Designation		Classification	
	Date [1]	Type	Date [1]	Type
Erath County		Unclassifiable/Attainment.		
Falls County		Unclassifiable/Attainment.		
Fannin County		Unclassifiable/Attainment.		
Fayette County		Unclassifiable/Attainment.		
Fisher County		Unclassifiable/Attainment.		
Floyd County		Unclassifiable/Attainment.		
Foard County		Unclassifiable/Attainment.		
Franklin County		Unclassifiable/Attainment.		
Freestone County		Unclassifiable/Attainment.		
Frio County		Unclassifiable/Attainment.		
Gaines County		Unclassifiable/Attainment.		
Garza County		Unclassifiable/Attainment.		
Gillespie County		Unclassifiable/Attainment.		
Glasscock County		Unclassifiable/Attainment.		
Goliad County		Unclassifiable/Attainment.		
Gonzales County		Unclassifiable/Attainment.		
Gray County		Unclassifiable/Attainment.		
Grayson County		Unclassifiable/Attainment.		
Gregg County		Unclassifiable/Attainment.		
Grimes County		Unclassifiable/Attainment.		
Guadalupe County		Unclassifiable/Attainment.		
Hale County		Unclassifiable/Attainment.		
Hall County		Unclassifiable/Attainment.		
Hamilton County		Unclassifiable/Attainment.		
Hansford County		Unclassifiable/Attainment.		
Hardeman County		Unclassifiable/Attainment.		
Hardin County		Unclassifiable/Attainment.		
Harrison County		Unclassifiable/Attainment.		
Hartley County		Unclassifiable/Attainment.		
Haskell County		Unclassifiable/Attainment.		
Hays County		Unclassifiable/Attainment.		
Hemphill County		Unclassifiable/Attainment.		
Henderson County		Unclassifiable/Attainment.		
Hidalgo County		Unclassifiable/Attainment.		
Hill County		Unclassifiable/Attainment.		
Hockley County		Unclassifiable/Attainment.		
Hood County		Unclassifiable/Attainment.		
Hopkins County		Unclassifiable/Attainment.		
Houston County		Unclassifiable/Attainment.		
Howard County		Unclassifiable/Attainment.		
Hudspeth County		Unclassifiable/Attainment.		
Hunt County		Unclassifiable/Attainment.		
Hutchinson County		Unclassifiable/Attainment.		
Irion County		Unclassifiable/Attainment.		
Jack County		Unclassifiable/Attainment.		
Jackson County		Unclassifiable/Attainment.		
Jasper County		Unclassifiable/Attainment.		
Jeff Davis County		Unclassifiable/Attainment.		
Jefferson County		Unclassifiable/Attainment.		
Jim Hogg County		Unclassifiable/Attainment.		
Jim Wells County		Unclassifiable/Attainment.		
Jones County		Unclassifiable/Attainment.		
Karnes County		Unclassifiable/Attainment.		
Kendall County		Unclassifiable/Attainment.		
Kenedy County		Unclassifiable/Attainment.		
Kent County		Unclassifiable/Attainment.		
Kerr County		Unclassifiable/Attainment.		
Kimble County		Unclassifiable/Attainment.		
King County		Unclassifiable/Attainment.		
Kinney County		Unclassifiable/Attainment.		
Kleberg County		Unclassifiable/Attainment.		
Knox County		Unclassifiable/Attainment.		
La Salle County		Unclassifiable/Attainment.		
Lamar County		Unclassifiable/Attainment.		
Lamb County		Unclassifiable/Attainment.		
Lampasas County		Unclassifiable/Attainment.		
Lavaca County		Unclassifiable/Attainment.		
Lee County	.	Unclassifiable/Attainment.		
Leon County		Unclassifiable/Attainment.		

TEXAS—2008 8-HOUR OZONE NAAQS—Continued

[Primary and secondary]

Designated area	Designation		Classification	
	Date [1]	Type	Date [1]	Type
Limestone County		Unclassifiable/Attainment.		
Lipscomb County		Unclassifiable/Attainment.		
Live Oak County		Unclassifiable/Attainment.		
Llano County		Unclassifiable/Attainment.		
Loving County		Unclassifiable/Attainment.		
Lubbock County		Unclassifiable/Attainment.		
Lynn County		Unclassifiable/Attainment.		
McCulloch County		Unclassifiable/Attainment.		
McLennan County		Unclassifiable/Attainment.		
McMullen County		Unclassifiable/Attainment.		
Madison County		Unclassifiable/Attainment.		
Marion County		Unclassifiable/Attainment.		
Martin County		Unclassifiable/Attainment.		
Mason County		Unclassifiable/Attainment.		
Matagorda County		Unclassifiable/Attainment.		
Maverick County		Unclassifiable/Attainment.		
Medina County		Unclassifiable/Attainment.		
Menard County		Unclassifiable/Attainment.		
Midland County		Unclassifiable/Attainment.		
Milam County		Unclassifiable/Attainment.		
Mills County		Unclassifiable/Attainment.		
Mitchell County		Unclassifiable/Attainment.		
Montague County		Unclassifiable/Attainment.		
Moore County		Unclassifiable/Attainment.		
Morris County		Unclassifiable/Attainment.		
Motley County		Unclassifiable/Attainment.		
Nacogdoches County		Unclassifiable/Attainment.		
Navarro County		Unclassifiable/Attainment.		
Newton County		Unclassifiable/Attainment.		
Nolan County		Unclassifiable/Attainment.		
Nueces County		Unclassifiable/Attainment.		
Ochiltree County		Unclassifiable/Attainment.		
Oldham County		Unclassifiable/Attainment.		
Orange County		Unclassifiable/Attainment.		
Palo Pinto County		Unclassifiable/Attainment.		
Panola County		Unclassifiable/Attainment.		
Parmer County		Unclassifiable/Attainment.		
Pecos County		Unclassifiable/Attainment.		
Polk County		Unclassifiable/Attainment.		
Potter County		Unclassifiable/Attainment.		
Presidio County		Unclassifiable/Attainment.		
Rains County		Unclassifiable/Attainment.		
Randall County		Unclassifiable/Attainment.		
Reagan County		Unclassifiable/Attainment.		
Real County		Unclassifiable/Attainment.		
Red River County		Unclassifiable/Attainment.		
Reeves County		Unclassifiable/Attainment.		
Refugio County		Unclassifiable/Attainment.		
Roberts County		Unclassifiable/Attainment.		
Robertson County		Unclassifiable/Attainment.		
Runnels County		Unclassifiable/Attainment.		
Rusk County		Unclassifiable/Attainment.		
Sabine County		Unclassifiable/Attainment.		
San Augustine County		Unclassifiable/Attainment.		
San Jacinto County		Unclassifiable/Attainment.		
San Patricio County	.	Unclassifiable/Attainment.		
San Saba County		Unclassifiable/Attainment.		
Schleicher County		Unclassifiable/Attainment.		
Scurry County		Unclassifiable/Attainment.		
Shackelford County		Unclassifiable/Attainment.		
Shelby County		Unclassifiable/Attainment.		
Sherman County		Unclassifiable/Attainment.		
Smith County		Unclassifiable/Attainment.		
Somervell County		Unclassifiable/Attainment.		
Starr County		Unclassifiable/Attainment.		
Stephens County		Unclassifiable/Attainment.		
Sterling County		Unclassifiable/Attainment.		
Stonewall County		Unclassifiable/Attainment.		
Sutton County		Unclassifiable/Attainment.		

TEXAS—2008 8-HOUR OZONE NAAQS—Continued

[Primary and secondary]

Designated area	Designation		Classification	
	Date [1]	Type	Date [1]	Type
Swisher County		Unclassifiable/Attainment.		
Taylor County		Unclassifiable/Attainment.		
Terrell County		Unclassifiable/Attainment.		
Terry County		Unclassifiable/Attainment.		
Throckmorton County	.	Unclassifiable/Attainment.		
Titus County		Unclassifiable/Attainment.		
Tom Green County		Unclassifiable/Attainment.		
Travis County		Unclassifiable/Attainment.		
Trinity County		Unclassifiable/Attainment.		
Tyler County		Unclassifiable/Attainment.		
Upshur County		Unclassifiable/Attainment.		
Upton County		Unclassifiable/Attainment.		
Uvalde County		Unclassifiable/Attainment.		
Val Verde County		Unclassifiable/Attainment.		
Van Zandt County		Unclassifiable/Attainment.		
Victoria County		Unclassifiable/Attainment.		
Walker County		Unclassifiable/Attainment.		
Ward County		Unclassifiable/Attainment.		
Washington County		Unclassifiable/Attainment.		
Webb County		Unclassifiable/Attainment.		
Wharton County		Unclassifiable/Attainment.		
Wheeler County		Unclassifiable/Attainment.		
Wichita County		Unclassifiable/Attainment.		
Wilbarger County		Unclassifiable/Attainment.		
Willacy County		Unclassifiable/Attainment.		
Williamson County		Unclassifiable/Attainment.		
Wilson County		Unclassifiable/Attainment.		
Winkler County		Unclassifiable/Attainment.		
Wood County		Unclassifiable/Attainment.		
Yoakum County		Unclassifiable/Attainment.		
Young County		Unclassifiable/Attainment.		
Zapata County		Unclassifiable/Attainment.		
Zavala County		Unclassifiable/Attainment.		

[1] This date is July 20, 2012, unless otherwise noted.
[2] Excludes Indian country located in each area, unless otherwise noted.
[3] Includes any Indian country in each county or area, unless otherwise specified.

■ 46. Section 81.345 is amended as follows:

■ a. By revising the table heading for ''Utah—Ozone (8-Hour Standard)'' to read ''Utah—1997 8-Hour Ozone NAAQS (Primary and Secondary)''

■ b. By adding a new table entitled ''Utah—2008 8-Hour Ozone NAAQS (Primary and Secondary)'' following the newly designated table ''Utah—1997 8-Hour Ozone NAAQS (Primary and Secondary)'' to read as follows:

§ 81.345 Utah.

* * * * *

UTAH—2008 8-HOUR OZONE NAAQS

[Primary and secondary]

Designated area	Designation		Classification	
	Date [1]	Type	Date [1]	Type
Uinta Basin, UT: [2]		Unclassifiable.		
Duchesne County				
Uintah County				
Ute Indian Tribe of the Uintah & Ouray Reservation [3]				
Rest of State and Rest of Indian Country		Unclassifiable/Attainment.		

[1] This date is July 20, 2012, unless otherwise noted.
[2] Excludes Indian country located in each area, unless otherwise noted.
[3] Includes Indian country of the tribe listed in this table located in the identified area. Information pertaining to areas of Indian country in this table is intended for CAA planning purposes only and is not an EPA determination of Indian country status or any Indian country boundary. EPA lacks the authority to establish Indian country land status, and is making no determination of Indian country boundaries, in this table.

■ 47. Section 81.346 is amended as follows:

■ a. By revising the table heading for ''Vermont—Ozone (8-Hour Standard)'' to read ''Vermont—1997 8-Hour Ozone NAAQS (Primary and Secondary)''

■ b. By adding a new table entitled ''Vermont—2008 8-Hour Ozone NAAQS (Primary and Secondary)'' following the newly designated table ''Vermont—1997 8-Hour Ozone NAAQS (Primary and Secondary)'' to read as follows:

§ 81.346 Vermont.

* * * * *

VERMONT—2008 8-HOUR OZONE NAAQS

[Primary and secondary]

Designated area [1]	Designation		Classification	
	Date [2]	Type	Date [2]	Type
AQCR 159 Champlain Valley Interstate:		Unclassifiable/Attainment.		
Addison County				
Chittenden County				
Franklin County				
Grand Isle County				
Rutland County				
AQCR 221 Vermont Intrastate:		Unclassifiable/Attainment.		
Bennington County				
Caledonia County				
Essex County				
Lamoille County				
Orange County				
Orleans County				
Washington County				
Windham County				
Windsor County				

[1] Includes any Indian country in each county or area, unless otherwise specified.
[2] This date is July 20, 2012, unless otherwise noted.

■ 48. Section 81.347 is amended as follows:

■ a. By revising the table heading for ''Virginia—Ozone (8-Hour Standard)'' to read ''Virginia—1997 8-Hour Ozone NAAQS (Primary and Secondary)''

■ b. By adding a new table entitled ''Virginia—2008 8-Hour Ozone NAAQS (Primary and Secondary)'' following the newly designated table ''Virginia—1997 8-Hour Ozone NAAQS (Primary and Secondary)'' to read as follows:

§ 81.347 Virginia.

* * * * *

VIRGINIA—2008 8-HOUR OZONE NAAQS

[Primary and secondary]

Designated area [1]	Designation		Classification	
	Date [2]	Type	Date [2]	Type
Washington, DC-MD-VA: [2]		Nonattainment		Marginal.
Arlington County				
Fairfax County				
Loudoun County				
Prince William County				
Alexandria City				
Fairfax City				
Falls Church City				
Manassas City				
Manassas Park City				
AQCR 207 Eastern Tennessee—SW Virginia Interstate: [3].		Unclassifiable/Attainment.		
Bland County				
Buchanan County				
Carroll County				
Dickenson County				
Grayson County				
Lee County				
Russell County				
Scott County				
Smyth County				
Tazewell County				
Washington County				
Wise County				
Wythe County				
Bristol City				
Galax City				
Norton City				
AQCR 222 Central Virginia Intrastate: [3]		Unclassifiable/Attainment.		

VIRGINIA—2008 8-HOUR OZONE NAAQS—Continued

[Primary and secondary]

Designated area [1]	Designation		Classification	
	Date [2]	Type	Date [2]	Type
Amelia County				
Amherst County				
Appomattox County				
Bedford County				
Brunswick County				
Buckingham County				
Campbell County				
Charlotte County				
Cumberland County				
Franklin County				
Halifax County				
Henry County				
Lunenburg County				
Mecklenburg County				
Nottoway County				
Patrick County				
Pittsylvania County				
Prince Edward County				
Bedford City				
Danville City				
Lynchburg City				
Martinsville City				
South Boston City				
AQCR 223 Hampton Roads Intrastate: [3]		Unclassifiable/Attainment.		
Isle of Wight County				
James City County				
Southampton County				
York County				
Chesapeake City				
Franklin City				
Hampton City				
Newport News City				
Norfolk City				
Poquoson City				
Portsmouth City				
Suffolk City				
Virginia Beach City				
Williamsburg City				
AQCR 224 NE Virginia Intrastate: [3]		Unclassifiable/Attainment.		
Accomack County				
Albemarle County				
Caroline County				
Culpeper County				
Essex County				
Fauquier County				
Fluvanna County				
Gloucester County				
Greene County				
King and Queen County				
King George County				
King William County				
Lancaster County				
Louisa County				
Madison County				
Mathews County				
Middlesex County				
Nelson County				
Northampton County				
Northumberland County				
Orange County				
Rappahannock County				
Richmond County				
Spotsylvania County				
Stafford County				
Westmoreland County				
Charlottesville City				
City of Fredericksburg				
AQCR 225 State Capital Intrastate: [3]		Unclassifiable/Attainment.		
Charles City County				

VIRGINIA—2008 8-HOUR OZONE NAAQS—Continued

[Primary and secondary]

Designated area [1]	Designation		Classification	
	Date [2]	Type	Date [2]	Type
Chesterfield County				
Dinwiddie County				
Goochland County				
Greensville County				
Hanover County				
Henrico County				
New Kent County				
Powhatan County				
Prince George County				
Surry County				
Sussex County				
Colonial Heights City				
Emporia City				
Hopewell City				
Petersburg City				
Richmond City				
AQCR 226 Valley of Virginia Intrastate: [3]		Unclassifiable/Attainment.		
Alleghany County				
Augusta County				
Bath County				
Botetourt County				
Clarke County				
Craig County				
Floyd County				
Frederick County				
Giles County				
Highland County				
Montgomery County				
Page County				
Pulaski County				
Roanoke County				
Rockbridge County				
Rockingham County				
Shenandoah County				
Warren County				
Buena Vista City				
Clifton Forge City				
Covington City				
Harrisonburg City				
Lexington City				
Radford City				
Roanoke City				
Salem City				
Staunton City				
Waynesboro City				
Winchester City				

[1] This date is July 20, 2012, unless otherwise noted.
[2] Excludes Indian country located in each area, unless otherwise noted.
[3] Includes any Indian country in each county or area, unless otherwise specified.

■ 49. Section 81.348 is amended as follows:

■ a. By revising the table heading for ''Washington—Ozone (8-Hour Standard)'' to read ''Washington—1997 8-Hour Ozone NAAQS (Primary and Secondary)''

■ b. By adding a new table entitled ''Washington—2008 8-Hour Ozone NAAQS (Primary and Secondary)'' following the newly designated table ''Washington—1997 8-Hour Ozone NAAQS (Primary and Secondary)'' to read as follows:

§ 81.348 Washington.

* * * * *

WASHINGTON—2008 8-HOUR OZONE NAAQS

[Primary and secondary]

Designated area	Designation [1]		Classification	
	Date [2]	Type	Date [1]	Type
Clark County		Unclassifiable/Attainment.		
King County		Unclassifiable/Attainment.		

WASHINGTON—2008 8-HOUR OZONE NAAQS—Continued

[Primary and secondary]

Designated area	Designation [1]		Classification	
	Date [2]	Type	Date [1]	Type
Pierce County		Unclassifiable/Attainment.		
Spokane County		Unclassifiable/Attainment.		
Thurston County		Unclassifiable/Attainment.		
Rest of state and rest of Indian country		Unclassifiable/Attainment.		

[1] Includes any Indian country in each county or area, unless otherwise specified.
[2] This date is July 20, 2012, unless otherwise noted.

■ 50. Section 81.349 is amended as follows:

■ a. By revising the table heading for ''West Virginia—Ozone (8-Hour Standard)'' to read ''West Virginia—1997 8-Hour Ozone NAAQS (Primary and Secondary)''

■ b. By adding a new table entitled ''West Virginia—2008 8-Hour Ozone NAAQS (Primary and Secondary)'' following the newly designated table ''West Virginia—1997 8-Hour Ozone NAAQS (Primary and Secondary)'' to read as follows:

§ 81.349 West Virginia.

* * * * *

WEST VIRGINIA—2008 8-HOUR OZONE NAAQS

[Primary and secondary]

Designated area[1]	Designation		Classification	
	Date [2]	Type	Date [2]	Type
Barbour County		Unclassifiable/Attainment.		
Berkeley County		Unclassifiable/Attainment.		
Boone County		Unclassifiable/Attainment.		
Braxton County		Unclassifiable/Attainment.		
Brooke County		Unclassifiable/Attainment.		
Cabell County		Unclassifiable/Attainment.		
Calhoun County		Unclassifiable/Attainment.		
Clay County		Unclassifiable/Attainment.		
Doddridge County		Unclassifiable/Attainment.		
Fayette County		Unclassifiable/Attainment.		
Gilmer County		Unclassifiable/Attainment.		
Grant County		Unclassifiable/Attainment.		
Greenbrier County		Unclassifiable/Attainment.		
Hampshire County		Unclassifiable/Attainment.		
Hancock County		Unclassifiable/Attainment.		
Hardy County		Unclassifiable/Attainment.		
Harrison County		Unclassifiable/Attainment.		
Jackson County		Unclassifiable/Attainment.		
Jefferson County		Unclassifiable/Attainment.		
Kanawha County		Unclassifiable/Attainment.		
Lewis County		Unclassifiable/Attainment.		
Lincoln County		Unclassifiable/Attainment.		
Logan County		Unclassifiable/Attainment.		
McDowell County		Unclassifiable/Attainment.		
Marion County		Unclassifiable/Attainment.		
Marshall County		Unclassifiable/Attainment.		
Mason County		Unclassifiable/Attainment.		
Mercer County		Unclassifiable/Attainment.		
Mineral County		Unclassifiable/Attainment.		
Mingo County		Unclassifiable/Attainment.		
Monongalia County		Unclassifiable/Attainment.		
Monroe County		Unclassifiable/Attainment.		
Morgan County		Unclassifiable/Attainment.		
Nicholas County		Unclassifiable/Attainment.		
Ohio County		Unclassifiable/Attainment.		
Pendleton County		Unclassifiable/Attainment.		
Pleasants County		Unclassifiable/Attainment.		
Pocahontas County		Unclassifiable/Attainment.		
Preston County		Unclassifiable/Attainment.		
Putnam County		Unclassifiable/Attainment.		
Raleigh County		Unclassifiable/Attainment.		
Randolph County		Unclassifiable/Attainment.		
Ritchie County		Unclassifiable/Attainment.		
Roane County		Unclassifiable/Attainment.		
Summers County		Unclassifiable/Attainment.		
Taylor County		Unclassifiable/Attainment.		

WEST VIRGINIA—2008 8-HOUR OZONE NAAQS—Continued

[Primary and secondary]

Designated area[1]	Designation		Classification	
	Date[2]	Type	Date[2]	Type
Tucker County		Unclassifiable/Attainment.		
Tyler County		Unclassifiable/Attainment.		
Upshur County		Unclassifiable/Attainment.		
Wayne County		Unclassifiable/Attainment.		
Webster County		Unclassifiable/Attainment.		
Wetzel County		Unclassifiable/Attainment.		
Wirt County		Unclassifiable/Attainment.		
Wood County		Unclassifiable/Attainment.		
Wyoming County		Unclassifiable/Attainment.		

[1] Includes any Indian country located in each county or area, unless otherwise noted.
[2] This date is July 20, 2012, unless otherwise noted.

■ 51. Section 81.350 is amended as follows:

■ a. By revising the table heading for ''Wisconsin—Ozone (8-Hour Standard)'' to read ''Wisconsin—1997 8-Hour Ozone NAAQS (Primary and Secondary)''

■ b. By adding a new table entitled ''Wisconsin—2008 8-Hour Ozone NAAQS (Primary and Secondary)'' following the newly designated table ''Wisconsin—1997 8-Hour Ozone NAAQS (Primary and Secondary)'' to read as follows:

§ 81.350 Wisconsin.

* * * * *

WISCONSIN—2008 8-HOUR OZONE NAAQS

[Primary and secondary]

Designated area	Designation		Classification	
	Date[1]	Type	Date[1]	Type
Sheboygan County, WI:[2] Sheboygan County		Nonattainment		Marginal.
Adams County[3]		Unclassifiable/Attainment.		
Ashland County[3]		Unclassifiable/Attainment.		
Barron County[3]		Unclassifiable/Attainment.		
Bayfield County[3]		Unclassifiable/Attainment.		
Brown County[3]		Unclassifiable/Attainment.		
Buffalo County[3]		Unclassifiable/Attainment.		
Burnett County[3]		Unclassifiable/Attainment.		
Calumet County[3]		Unclassifiable/Attainment.		
Chippewa County[3]		Unclassifiable/Attainment.		
Clark County[3]		Unclassifiable/Attainment.		
Columbia County[3]		Unclassifiable/Attainment.		
Crawford County[3]		Unclassifiable/Attainment.		
Dane County[3]		Unclassifiable/Attainment.		
Dodge County[3]		Unclassifiable/Attainment.		
Door County[3]		Unclassifiable/Attainment.		
Douglas County[3]		Unclassifiable/Attainment.		
Dunn County[3]		Unclassifiable/Attainment.		
Eau Claire County[3]		Unclassifiable/Attainment.		
Florence County[3]		Unclassifiable/Attainment.		
Fond du Lac County[3]		Unclassifiable/Attainment.		
Forest County[3]		Unclassifiable/Attainment.		
Grant County[3]		Unclassifiable/Attainment.		
Green County[3]		Unclassifiable/Attainment.		
Green Lake County[3]		Unclassifiable/Attainment.		
Iowa County[3]		Unclassifiable/Attainment.		
Iron County[3]		Unclassifiable/Attainment.		
Jackson County[3]		Unclassifiable/Attainment.		
Jefferson County[3]		Unclassifiable/Attainment.		
Juneau County[3]		Unclassifiable/Attainment.		
Kewaunee County[3]		Unclassifiable/Attainment.		
La Crosse County[3]		Unclassifiable/Attainment.		
Lafayette County[3]		Unclassifiable/Attainment.		
Langlade County[3]		Unclassifiable/Attainment.		
Lincoln County[3]		Unclassifiable/Attainment.		
Manitowoc County[3]		Unclassifiable/Attainment.		
Marathon County[3]		Unclassifiable/Attainment.		
Marinette County[3]		Unclassifiable/Attainment.		
Marquette County[3]		Unclassifiable/Attainment.		
Menominee County[3]		Unclassifiable/Attainment.		

WISCONSIN—2008 8-HOUR OZONE NAAQS—Continued

[Primary and secondary]

Designated area	Designation		Classification	
	Date [1]	Type	Date [1]	Type
Milwaukee County [3]		Unclassifiable/Attainment.		
Monroe County [3]		Unclassifiable/Attainment.		
Oconto County [3]		Unclassifiable/Attainment.		
Oneida County [3]		Unclassifiable/Attainment.		
Outagamie County [3]		Unclassifiable/Attainment.		
Ozaukee County [3]		Unclassifiable/Attainment.		
Pepin County [3]		Unclassifiable/Attainment.		
Pierce County [3]		Unclassifiable/Attainment.		
Polk County [3]		Unclassifiable/Attainment.		
Portage County [3]		Unclassifiable/Attainment.		
Price County [3]		Unclassifiable/Attainment.		
Racine County [3]		Unclassifiable/Attainment.		
Richland County [3]		Unclassifiable/Attainment.		
Rock County [3]		Unclassifiable/Attainment.		
Rusk County [3]		Unclassifiable/Attainment.		
St. Croix County [3]		Unclassifiable/Attainment.		
Sauk County [3]		Unclassifiable/Attainment.		
Sawyer County [3]		Unclassifiable/Attainment.		
Shawano County [3]		Unclassifiable/Attainment.		
Taylor County [3]		Unclassifiable/Attainment.		
Trempealeau County [3]		Unclassifiable/Attainment.		
Vernon County [3]		Unclassifiable/Attainment.		
Vilas County [3]		Unclassifiable/Attainment.		
Walworth County [3]		Unclassifiable/Attainment.		
Washburn County [3]		Unclassifiable/Attainment.		
Washington County [3]		Unclassifiable/Attainment.		
Waukesha County [3]		Unclassifiable/Attainment.		
Waupaca County [3]		Unclassifiable/Attainment.		
Waushara County [3]		Unclassifiable/Attainment.		
Winnebago County [3]		Unclassifiable/Attainment.		
Wood County [3]		Unclassifiable/Attainment.		

[1] This date is July 20, 2012, unless otherwise noted.
[2] Excludes Indian country located in each area, unless otherwise noted.
[3] Includes any Indian country in each county or area, unless otherwise specified.

■ 52. Section 81.351 is amended as follows:

■ a. By revising the table heading for ''Wyoming—Ozone (8-Hour Standard)'' to read ''Wyoming—1997 8-Hour Ozone NAAQS (Primary and Secondary)''

■ b. By adding a new table entitled ''Wyoming—2008 8-Hour Ozone NAAQS (Primary and Secondary)'' following the newly designated table ''Wyoming—1997 8-Hour Ozone NAAQS (Primary and Secondary)'' to read as follows:

§ 81.351 Wyoming.

* * * * *

WYOMING—2008 8-HOUR OZONE NAAQS

[Primary and secondary]

Designated area	Designation		Classification	
	Date [1]	Type	Date [1]	Type
Upper Green River Basin Area, WY: [2] Lincoln County (part)		Nonattainment		Marginal.

WYOMING—2008 8-HOUR OZONE NAAQS—Continued

[Primary and secondary]

Designated area	Designation		Classification	
	Date [1]	Type	Date [1]	Type
The area of the county north and east of the boundary defined by a line starting at the point defined by the intersection of the southwest corner Section 30 Range (R) 115 West Township (T) 27N and the northwest corner of Section 31 R 115 West T27N of Sublette County at Sublette County's border with Lincoln County. From this point the boundary moves to the west 500 feet to Aspen Creek. The boundary follows the centerline of Aspen Creek downstream to the confluence of Aspen Creek and Fontenelle Creek (in R116W T26N, Section 1). From this point the boundary moves generally to the south along the centerline of Fontenelle Creek to the confluence of Fontenelle Creek and Roney Creek (in R115W T24N Section 6). From the confluence, the boundary moves generally to the east along the centerline of Fontenelle Creek and into the Fontenelle Reservoir (in R112W T24N Section 6). The boundary moves east southeast along the centerline of the Fontenelle Reservoir and then toward the south along the centerline of the Green River to where the Green River in R111W T24N Section 31 crosses into Sweetwater County.				
Sublette County				
Sweetwater County (part)				
The area of the county west and north of the boundary which begins at the midpoint of the Green River, where the Green River enters Sweetwater County from Lincoln County in R111W T24N Section 31. From this point, the boundary follows the center of the channel of the Green River generally to the south and east to the confluence of the Green River and the Big Sandy River (in R109W T22N Section 28). From this point, the boundary moves generally north and east along the centerline of the Big Sandy River to the confluence of the Big Sandy River with Little Sandy Creek (in R106W T25N Section 33). The boundary continues generally toward the northeast along the centerline of Little Sandy Creek to the confluence of Little Sandy Creek and Pacific Creek (in R106W T25N Section 24). From this point, the boundary moves generally to the east and north along the centerline of Pacific Creek to the confluence of Pacific Creek and Whitehorse Creek (in R103W T26N Section 10). From this point the boundary follows the centerline of Whitehorse Creek generally to the northeast until it reaches the eastern boundary of Section 1 R103W T26N. From the point where Whitehorse Creek crosses the eastern section line of Section 1 R103W T26N, the boundary moves straight north along the section line to the southeast corner of Section 36 R103W T27N in Sublette County where the boundary ends.				
Rest of State and Rest of Indian Country	.....	Unclassifiable/Attainment.		

[1] This date is July 20, 2012, unless otherwise noted.

[2] Excludes Indian country located in each area, unless otherwise noted.

■ 53. Section 81.352 is amended as follows:

■ a. By revising the table heading for ''American Samoa—Ozone (8-Hour Standard)'' to read ''American Samoa—1997 8-Hour Ozone NAAQS (Primary and Secondary)''

■ b. By adding a new table entitled ''American Samoa—2008 8-Hour Ozone NAAQS (Primary and Secondary)'' following the newly designated table ''American Samoa—1997 8-Hour Ozone NAAQS (Primary and Secondary)'' to read as follows:

§ 81.352 American Samoa.

* * * * *

AMERICAN SAMOA—2008 8-HOUR OZONE NAAQS

[Primary and secondary]

Designated area	Designation		Classification	
	Date [1]	Type	Date [1]	Type
Territory Wide and Any Areas of Indian Country: American Samoa	.....	Unclassifiable/Attainment.		

[1] This date is July 20, 2012, unless otherwise noted.

■ 54. Section 81.353 is amended as follows:

■ a. By revising the table heading for ''Guam—Ozone (8-Hour Standard)'' to read ''Guam—1997 8-Hour Ozone NAAQS (Primary and Secondary)''

■ b. By adding a new table entitled ''Guam—2008 8-Hour Ozone NAAQS (Primary and Secondary)'' following the newly designated table ''Guam—1997 8-Hour Ozone NAAQS (Primary and Secondary)'' to read as follows:

§ 81.353 Guam.

* * * * *

GUAM—2008 8-HOUR OZONE NAAQS

[Primary and secondary]

Designated area	Designation		Classification	
	Date [1]	Type	Date [1]	Type
Territory Wide and Any Areas of Indian Country: Guam	.....	Unclassifiable/Attainment.		

[1] This date is July 20, 2012, unless otherwise noted.

■ 55. Section 81.354 is amended as follows:

■ a. By revising the table heading for ''Northern Mariana Islands—Ozone (8-Hour Standard)'' to read ''Northern Mariana Islands—1997 8-Hour Ozone NAAQS (Primary and Secondary)''

■ b. By adding a new table entitled ''Northern Mariana Islands—2008 8-Hour Ozone NAAQS (Primary and Secondary)'' following the newly designated table ''Northern Mariana Islands—1997 8-Hour Ozone NAAQS (Primary and Secondary)'' to read as follows:

§ 81.354 Northern Mariana Islands.

* * * * *

NORTHERN MARIANA ISLANDS—2008 8-HOUR OZONE NAAQS

[Primary and secondary]

Designated area	Designation		Classification	
	Date [1]	Type	Date [1]	Type
Northern Mariana Islands and Any Areas of Indian Country.	.....	Unclassifiable/Attainment.		

[1] This date is July 20, 2012, unless otherwise noted.

■ 56. Section 81.355 is amended as follows:

■ a. By revising the table heading for ''Puerto Rico—Ozone (8-Hour Standard)'' to read ''Puerto Rico—1997 8-Hour Ozone NAAQS (Primary and Secondary)''

■ b. By adding a new table entitled ''Puerto Rico—2008 8-Hour Ozone NAAQS (Primary and Secondary)'' following the newly designated table ''Puerto Rico—1997 8-Hour Ozone NAAQS (Primary and Secondary)'' to read as follows:

§ 81.355 Puerto Rico.

* * * * *

PUERTO RICO—2008 8-HOUR OZONE NAAQS

[Primary and secondary]

Designated area [1]	Designation		Classification	
	Date [2]	Type	Date [2]	Type
All of Puerto Rico AQCR 244		Unclassifiable/Attainment.		

[1] Includes any Indian country in each county or area, unless otherwise specified.
[2] This date is July 20, 2012, unless otherwise noted.

■ 57. Section 81.356 is amended as follows:

■ a. By revising the table heading for ''Virgin Islands—Ozone (8-Hour Standard)'' to read ''Virgin Islands—1997 8-Hour Ozone NAAQS (Primary and Secondary)''

■ b. By adding a new table entitled ''Virgin Islands—2008 8-Hour Ozone NAAQS (Primary and Secondary)'' following the newly designated table ''Virgin Islands—1997 8-Hour Ozone NAAQS (Primary and Secondary)'' to read as follows:

§ 81.356 Virgin Islands.

* * * * *

VIRGIN ISLANDS—2008 8-HOUR OZONE NAAQS

[Primary and secondary]

Designated area	Designation		Classification	
	Date [1]	Type	Date [1]	Type
All of Virgin Islands AQCR 247: [2]		Unclassifiable/Attainment.		

[1] This date is July 20, 2012, unless otherwise noted.
[2] Includes any Indian country in each county or area, unless otherwise specified.

[FR Doc. 2012–11618 Filed 5–18–12; 8:45 am]

BILLING CODE 6560–50–P

ENVIRONMENTAL PROTECTION AGENCY

40 CFR Parts 50 and 51

[EPA–HQ–OAR–2010–0885, FRL–9667–9]

RIN 2060–AR32

Implementation of the 2008 National Ambient Air Quality Standards for Ozone: Nonattainment Area Classifications Approach, Attainment Deadlines and Revocation of the 1997 Ozone Standards for Transportation Conformity Purposes

AGENCY: Environmental Protection Agency (EPA).

ACTION: Final rule.

SUMMARY: In this final rule, the EPA is establishing the air quality thresholds that define the classifications assigned to all nonattainment areas for the 2008 ozone national ambient air quality standards (NAAQS) (the ''2008 ozone NAAQS'') which were promulgated on March 12, 2008. The EPA is also granting reclassification for selected nonattainment areas that voluntarily reclassified under the 1997 ozone NAAQS. This rule also establishes December 31 of each relevant calendar year as the attainment date for all nonattainment area classification categories. Finally, this rule provides for the revocation of the 1997 ozone NAAQS for transportation conformity purposes to occur 1 year after the effective date of designations for the 2008 ozone NAAQS.

DATES: This rule is effective on July 20, 2012.

ADDRESSES: The EPA has established a docket for this action under Docket ID No. EPA–HQ–OAR–2010–0885. All documents in the docket are listed on the *http://www.regulations.gov* Web site. Although listed in the index, some information is not publicly available, e.g., confidential business information (CBI) or other information whose disclosure is restricted by statute. Certain other material, such as copyrighted material, will be publicly available only in hard copy form. Publicly available docket materials are available either electronically through *http://www.regulations.gov* or in hard copy at the Air and Radiation Docket and Information Center, EPA/DC, EPA West Building, Room 3334, 1301 Constitution Ave. NW., Washington, DC. The Public Reading Room is open from 8:30 a.m. to 4:30 p.m., Monday through Friday, excluding legal holidays. The telephone number for the Public Reading Room is (202) 566–1744, and the telephone number for the Air Docket is (202) 566–1742.

FOR FURTHER INFORMATION CONTACT: For further general information on this rulemaking, contact Dr. Karl Pepple, Office of Air Quality Planning and Standards, U.S. Environmental Protection Agency (C539–01), Research Triangle Park, NC 27711, phone number (919) 541–2683, or by email at *pepple.karl@epa.gov;* or Mr. Butch Stackhouse, Office of Air Quality Planning and Standards, U.S. Environmental Protection Agency (C539–01), Research Triangle Park, NC 27711, phone number (919) 541–5208, or by email at *stackhouse.butch@epa.gov.*

SUPPLEMENTARY INFORMATION:

I. General Information

A. Does this action apply to me?

Entities potentially affected directly by this final rule include state, local, and tribal governments. Entities potentially affected indirectly by the final rule include owners and operators of sources of emissions [volatile organic compounds (VOCs) and nitrogen oxides (NO_X)] that contribute to ground-level ozone concentrations.

B. Where can I get a copy of this document and other related information?

In addition to being available in the docket, an electronic copy of this notice will be posted at *http://www.epa.gov/air/ozonepollution/actions.html#impl* under ''recent actions.''

C. How is this notice organized?

The information presented in this notice is organized as follows:

I. General Information
A. Does this action apply to me?
B. Where can I get a copy of this document and other related information?
C. How is this notice organized?
II. Background
III. What are the final classification thresholds for nonattainment areas for the 2008 ozone NAAQS?
A. Summary of Proposed Classification Thresholds
B. Brief Summary of Comments on the Proposed Rule
C. Final Classification Thresholds
IV. How will areas that were voluntarily reclassified under the 1997 ozone NAAQS be addressed?
A. Summary of Proposed Reclassification of Selected Areas
B. Brief Summary of Comments Received
C. Final Action
V. What are the attainment deadlines for each classification?
A. Summary of Proposed Attainment Deadlines
B. Brief Summary of Comments Received
C. Final Action
VI. When is the EPA revoking the 1997 ozone NAAQS for transportation conformity purposes?
A. Summary of Proposal
B. Final Date for Revoking the 1997 Ozone NAAQS for Transportation Conformity Purposes
VII. Statutory and Executive Order Reviews
A. Executive Order 12866: Regulatory Planning and Review and Executive Order 13563: Improving Regulation and Regulatory Review
B. Paperwork Reduction Act
C. Regulatory Flexibility Act
D. Unfunded Mandates Reform Act
E. Executive Order 13132: Federalism
F. Executive Order 13175: Consultation and Coordination With Indian Tribal Governments
G. Executive Order 13045: Protection of Children From Environmental Health and Safety Risks
H. Executive Order 13211: Actions Concerning Regulations That Significantly Affect Energy Supply, Distribution, or Use
I. National Technology Transfer and Advancement Act
J. Executive Order 12898: Federal Actions To Address Environmental Justice in Minority Populations and Low-Income Populations
K. Congressional Review Act
VIII. Statutory Authority
List of Subjects

II. Background

On March 27, 2008,[1] the EPA published revisions to both the primary and secondary NAAQS for ozone to a level of 0.075 parts per million (ppm) (annual fourth-highest daily maximum 8-hour average concentration, averaged over 3 years). On July 16, 2009, the EPA announced that it would initiate a rulemaking to reconsider the NAAQS for various reasons, including the fact that the 0.075 ppm level fell outside of the range recommended by the Clean Air Scientific Advisory Committee. The EPA proposed reconsideration of the NAAQS on January 6, 2010. However, the EPA has not taken final action on the proposed reconsideration; thus, the current NAAQS for ozone remains at 0.075 ppm, as established in 2008. The 2008 ozone NAAQS retains the same general form and averaging time as the 0.08 ppm NAAQS set in 1997 but is set at a more protective level.

The EPA deferred initial designation of areas for the 2008 ozone NAAQS until March 12, 2011, pending the NAAQS reconsideration.[2] *See* 75 FR 2936, January 19, 2010. After the March 12, 2011, designation deadline passed, WildEarth Guardians and Elizabeth Crowe (WildEarth Guardians) filed a lawsuit seeking to compel the EPA to take action to designate areas for the 2008 ozone NAAQS. *WildEarth Guardians and Elizabeth Crowe* v. *Jackson* (D. Ariz. 11–CV–01661). The EPA and WildEarth Guardians settled the case by entering into a consent decree that requires the EPA Administrator to sign a final rule designating areas for the 2008 ozone NAAQS by May 31, 2012. In September 2011, the EPA reinitiated efforts[3] to designate areas for the 2008 ozone NAAQS, and notified states of the EPA's preliminary designation decisions on or about December 9, 2011.[4] On February 14, 2012, the EPA proposed this rulemaking to address the classifications and attainment deadlines that apply to the areas that are designated as nonattainment for the 2008 ozone NAAQS. *See* 77 FR 8197. The public comment period for this rule ran to March 15, 2012. The EPA received 41 comments on the Notice of Proposed Rulemaking. This document discusses the comments received and how they were considered by the EPA in general terms. The Response to Comments document provides more detailed responses to the comments received. The public comments received on this rulemaking and the EPA's Response to Comments document are posted in the docket at *www.regulations.gov.*

We are taking four actions in this final rule: (1) Establishing the air quality thresholds that define each of the five Clean Air Act (CAA) classifications for areas designated nonattainment for the 2008 ozone NAAQS; (2) establishing the attainment deadline associated with each classification; (3) granting reclassification for selected nonattainment areas that voluntarily reclassified under the 1997 ozone NAAQS; and (4) revoking the 1997 ozone NAAQS for purposes of transportation conformity one year after the effective date of the designations for the 2008 ozone NAAQS.

First, we are establishing the air quality thresholds for classification categories that are assigned to all areas designated nonattainment for the 2008 ozone NAAQS according to the ''percent-above-the-standard'' methodology. In accordance with CAA section 181(a)(1), each area designated as nonattainment for the 2008 ozone NAAQS will be classified by operation of law at the same time as the area is designated by the EPA. Under subpart 2 of part D of title I of the CAA, state planning and emissions control requirements for ozone are determined, in part, by a nonattainment area's classification. In 1990, Congress amended part D of title I of the CAA by adding several new subparts, including subpart 2, which specifies implementation requirements for ozone nonattainment areas. For areas classified under subpart 2, these requirements apply in addition to the general State Implementation Plan (SIP) planning requirements applicable to all nonattainment areas under subpart 1 of part D. Under subpart 2, ozone nonattainment areas are classified based on the severity of their ozone levels (as determined based on the area's ''design value,'' which represents air quality in the area for the most recent 3 years).[5] The possible classifications are Marginal, Moderate, Serious, Severe, and Extreme. Nonattainment areas with a ''lower'' classification have ozone levels that are closer to the standard than areas with a ''higher'' classification.

[1] *See* 73 FR 16436. The secondary ozone standard, designed to protect public welfare, was set at the same level and with the same averaging time as the primary standard. Since the primary and secondary standards are identical, we refer to them, both individually and together, as the ''2008 ozone standard'' (or, alternatively, the ''2008 ozone NAAQS'') throughout this preamble. For a detailed explanation of the calculation of the 3-year 8-hour average, see 40 CFR part 50, Appendix I.

[2] The 2008 ozone NAAQS were promulgated on March 12, 2008. The presumptive 2-year designation requirement found in CAA § 107(d)(1)(B) required designations for areas by March 12, 2010. The EPA invoked the additional year for designations as allowed under CAA § 107(d)(1)(B) because we determined that due to the reconsideration there was insufficient information to designate areas.

[3] *http://www.epa.gov/airquality/ozonepollution/pdfs/OzoneMemo9-22-11.pdf.*

[4] *http://www.epa.gov/airquality/ozonepollution/designations/2008standards/state.htm.*

[5] The air quality design value for the 8-hour ozone NAAQS is the 3-year average of the annual 4th highest daily maximum 8-hour average ozone concentration. *See* 40 CFR Part 50, Appendix I.

Areas in the lower classification levels have fewer and/or less stringent mandatory air quality planning and control requirements than those in higher classifications. For instance, among other things, for a Marginal area a state is required to adopt an emissions statement rule for stationary sources, submit a baseline emissions inventory, and implement a nonattainment area preconstruction permit program; however, states are not required to prepare an attainment demonstration and associated contingency measures for Marginal areas. For a Moderate area, a state needs to comply with the Marginal area requirements plus certain other requirements, including the requirement to submit a demonstration that the area will attain in 6 years, the requirement to adopt and implement certain emissions controls, such as reasonably available control technology, a basic vehicle inspection and maintenance program if the area meets the applicable population threshold, and provisions for greater emissions offsets for new or modified sources under the state's new source review (NSR) program. Each higher classification similarly requires emissions controls and stricter NSR offset requirements in addition to those required for the lower classifications. In addition, under the higher classifications, smaller sources are considered ''major sources'' for permitting and other requirements.

Second, the EPA is setting the attainment date as the number of years specified in Table 1 in section 181(a) from December 31, 2012. Because the attainment dates established in Table 1 have all passed and application of those dates would produce an absurd result, the EPA must reasonably interpret Table 1 to establish attainment dates for the 2008 ozone NAAQS. We believe the approach we are adopting is consistent with the intent of Congress at the time Table 1 was enacted as part of the CAA Amendments of 1990.

Third, the EPA is addressing situations where states have voluntarily requested reclassifications for areas under the 1997 ozone NAAQS. Six areas in California and one area in Texas were voluntarily reclassified at the request of the states for the 1997 ozone NAAQS. These areas have initial classifications for the 2008 ozone NAAQS under the percent-above-the-standard approach we are promulgating that are higher than their classifications under the 1997 NAAQS. In some cases, this would result in these areas being required to attain the more stringent 2008 ozone NAAQS prior to the deadline associated with the area's classification for the 1997 ozone NAAQS. The EPA proposed to interpret the voluntary reclassification requests for the 1997 ozone NAAQS for such areas to also apply for the more stringent 2008 ozone NAAQS unless the state were to expressly request otherwise. Texas requested that the voluntary reclassification for the 1997 NAAQS for the Houston area not apply for the 2008 NAAQS. California commented that it supports the approach of applying its requests for voluntary reclassification for the six areas for the 1997 NAAQS to the 2008 ozone NAAQS. The EPA is finalizing the voluntary reclassifications for the six California areas for the 2008 ozone NAAQS.

Fourth, in this rulemaking, the EPA is revoking the 1997 primary and secondary ozone NAAQS for transportation conformity purposes only.[6] The revocation of the 1997 ozone NAAQS for this limited purpose will occur 1 year after the effective date of the initial area designation for each area for the 2008 ozone NAAQS. This approach results in only one ozone NAAQS—the more protective 2008 ozone NAAQS—applying for purposes of transportation conformity, after the end of the 1-year transportation conformity grace period that applies to newly designated nonattainment areas. *See* CAA section 176(c)(6). In the absence of this final action, areas currently in nonattainment or maintenance for the 1997 ozone NAAQS that are designated nonattainment for the 2008 ozone NAAQS would be required to implement the transportation conformity program for both the 1997 and 2008 ozone NAAQS concurrently. The EPA intends to address potential revocation of the 1997 ozone NAAQS for all other purposes in a future, separate rulemaking.

III. What are the final classification thresholds for nonattainment areas for the 2008 ozone NAAQS?

A. Summary of Proposed Classification Thresholds

The subpart 2 classification table in CAA section 181(a)(1) is based on 1-hour ozone nonattainment area design values (DVs) (i.e., beginning at a level of 0.121 ppm) because it was designed for implementation of the 0.12 ppm 1-hour standard, which was the effective ozone standard when Congress added the table to the CAA in 1990. Because the table is based on DVs for a 0.12 ppm 1-hour standard, the EPA recognized that it did not make sense to apply the thresholds listed in the table for implementing an 8-hour form of the ozone standard, first established in 1997. *See* 69 FR at 23998. We adopted by regulation a modified version of the subpart 2 classification table for the 1997 8-hour ozone standard which contains 8-hour DV thresholds for each classification, rather than the statutory 1-hour DV thresholds. 40 CFR 51.903(a). We translated the classification thresholds in the subpart 2 classification table from 1-hour DVs to 8-hour DVs based on the percentage by which each classification threshold in the table exceeds the 1-hour ozone NAAQS. We noted that these percentages, as established by Congress in 1990, set the classification thresholds at certain percentages or fractions above the level of the standard.[7] See 69 FR at 23957. We refer to this method as the ''percent-above-the-standard'' method. We proposed to take the same approach for the 2008 ozone NAAQS. After analyzing various alternative options, we proposed to use the same ''percent-above-the-standard'' methodology as was used for the 1997 ozone NAAQS[8] modified to account for the new level of 0.075 ppm as compared to the level of 0.08 ppm used to establish the classification table for the 1997 ozone NAAQS. *See* 77 FR at 8201–02.

The proposed percent-above-the-standard method is a simple and straightforward method for establishing classification thresholds that is based on principles inherent in the subpart 2 classification table itself. The principles include the following:

- Areas are grouped by the severity of their air quality problem as characterized by the degree of nonattainment based on their DV.
- Classification would occur ''by operation of law'' without relying on the EPA exercising discretion for individual situations (prior to any application of the 5 percent adjustment provision under section 181(a)(4) which may occur in the 90-day period following initial designations and classifications). *See* section III.C of this rule for additional details on how the EPA intends to address previous requests for

[6] When the EPA revises a NAAQS, the prior NAAQS is not automatically revoked. Accordingly, both the 1997 ozone NAAQS and the more stringent 2008 ozone NAAQS are active standards unless and until the EPA takes action to revoke the previous 1997 standard.

[7] The upper thresholds of the Marginal, Moderate, Serious, and Severe classifications are precise percentages or fractions above the level of the standard, namely 15 percent (3/20ths more than the standard), 33.33 percent (one-third more than the standard), 50 percent (one-half more than the standard), and 133.3 percent (one and one-third more than the standard).

[8] Background Information Document: Additional Options Considered for Classification of Nonattainment Areas under the Proposed 2008 Ozone NAAQS. January 2012.

voluntary reclassification for the 1997 ozone NAAQS.

• Classification thresholds are derived using the same percentages above the standard that Congress used when promulgating Table 1 in section 181(a) for purposes of the 1-hour ozone standard, and reflect reasonable attainment periods for most areas that fall into the various classifications.

B. Brief Summary of Comments on the Proposed Rule

The EPA received several comments on the percent-above-the-standard methodology. Most of the commenters supported the adoption of this approach, stating that it was consistent with the CAA as well as the methodology used in the implementation of the 1997 ozone NAAQS. Those opposing this option did so for a number of reasons, including concerns that: It puts too many areas in the ''Marginal'' category; the outcome of the approach does not properly address the role of transport in the ability of downwind nonattainment areas to attain by the Marginal or Moderate attainment date; and a delay in progress will result from Marginal areas not attaining by the specified date in 2015.

Other commenters that did not directly support or oppose the use of the percent-above-the-standard methodology suggested that the EPA should have considered other options such as the use of subpart 1 for classifying areas. These comments, and the EPA's responses, are discussed in more detail in the Response to Comments document in the docket.

C. Final Classification Thresholds

In this section, we describe the EPA's methodology for establishing final classification thresholds for purposes of classifying ozone nonattainment areas with respect to the 2008 ozone NAAQS as well as the basis for the decision. After considering the comments, the EPA is finalizing the percent-above-the-standard methodology as proposed. Using this approach for the 2008 ozone NAAQS, the classification thresholds listed for the 1-hour NAAQS in the subpart 2 classification table are translated into a corresponding set of thresholds for the 2008 8-hour NAAQS by setting threshold DVs in the new table at the same percentages above the 2008 ozone NAAQS as the DV levels in the subpart 2 classification table are above the 1-hour ozone NAAQS. For example, the threshold separating the Marginal and Moderate classifications in the subpart 2 classification table (0.138 ppm) is 15 percent above the 1-hour ozone NAAQS (0.12 ppm). Thus, under this approach, the threshold separating the Marginal and Moderate classifications for the 2008 ozone NAAQS is 0.075 ppm plus 15 percent, or 0.086 ppm. Table 1, below, depicts this translation for all classifications as they apply for the 2008 ozone NAAQS.

TABLE 1—SUBPART 2 1-HOUR OZONE DESIGN VALUE CLASSIFICATION TABLE TRANSLATION TO 8-HOUR DESIGN VALUES FOR THE 2008 OZONE NAAQS OF 0.075 PPM

Area classification		1-hour design value (ppm)	Percent above 1-hour ozone NAAQS	8-hr ozone design value (ppm)
Marginal	From	0.121	0.833	0.076
	up to [1]	0.138	15.000	0.086
Moderate	From	0.138	15.000	0.086
	up to [1]	0.160	33.333	0.100
Serious	From	0.160	33.333	0.100
	up to [1]	0.180	50.000	0.113
Severe-15	From	0.180	50.000	0.113
	up to[1]	0.190	58.333	0.119
Severe-17	From	0.190	58.333	0.119
	up to[1]	0.280	133.333	0.175
Extreme	equal to or above	0.280	133.333	0.175

Note 1: But not including.

In conjunction with this final rule, the EPA is also finalizing initial nonattainment area designations for 45 areas with ambient ozone concentrations exceeding the 2008 ozone NAAQS.[9] The 45 nonattainment areas are distributed in each classification category as shown in Table 2. As described further in section IV.A of this rule, six areas are being voluntarily reclassified to a higher classification as part of this rule. Specifically, the areas listed in Table 3 will receive higher classifications based on their voluntary reclassification requests for the 1997 ozone NAAQS. These higher classifications are reflected in Table 2.

TABLE 2—NUMBER OF NONATTAINMENT AREAS IN EACH CLASSIFICATION CATEGORY UNDER THE 2008 OZONE NAAQS [1]

Classification	Number of hypothetical areas estimated in the proposal	Actual number of areas
Marginal	43	36
Moderate	6	3
Serious	3	2
Severe	0	3
Extreme	0	2

[9] The EPA is also intending to designate as nonattainment a 46th area based on a monitor in the Chicago, IL area that is violating the 2008 NAAQS based on final 2009–2011 data. The EPA intends to complete that action by May 31, 2012. We anticipate that the Chicago nonattainment area will be classified Marginal.

TABLE 2—NUMBER OF NONATTAINMENT AREAS IN EACH CLASSIFICATION CATEGORY UNDER THE 2008 OZONE NAAQS [1]—Continued

Classification	Number of hypothetical areas estimated in the proposal	Actual number of areas
Total	52	46

Note 1: The EPA relied on air quality data from 2008–2010 to develop the hypothetical nonattainment areas for purposes of the proposed rule. Several areas, including the Chicago area, certified their 2011 air quality data early, which allowed the EPA to consider that data for purposes of final designations. This table includes the Chicago nonattainment area in the total number of areas.

The EPA is finalizing this approach because the percent-above-the-standard methodology reflects the same approach codified in the CAA, as amended in 1990. It also results in the majority of areas receiving a classification with an attainment date that we believe the areas can meet. The EPA performed an analysis that indicates that the majority of areas classified as Marginal will be able to attain the 2008 ozone NAAQS within 3 years of designation (i.e., in 2015) due to reductions of ozone precursors resulting from a number of federal and state emission reduction programs that have already been adopted.[10] Such programs include more stringent emission standards for onroad and nonroad vehicles and equipment (with associated fleet turnover), and regional reductions in power plant emissions to address interstate transport.[11] For areas classified Moderate and above that are required to develop attainment demonstrations and adopt reasonably available control measures, it is unlikely that already adopted federal and existing state measures will be sufficient to bring the areas into attainment. The EPA did not attempt to forecast additional federal, regional, state or local control measures that may be implemented prior to the relevant attainment dates in 2018 that might help these areas attain the NAAQS. However, we note that the federal and regional programs already in place, in conjunction with others that may be adopted in the next several years, such as maximum achievable control technology standards for boilers, will help these areas make progress toward attainment. In addition, the CAA requires these areas to meet reasonable progress goals out to their attainment date and also requires these areas to evaluate what reasonably available control measures are available in order to attain as expeditiously as practicable. For these reasons, we anticipate that these areas will be able to attain the 2008 ozone NAAQS by the attainment date for their classification. We note, as provided further below, several areas with the most persistent ozone problems are most likely not to attain by the attainment date associated with their classification by operation of law, and are being voluntarily reclassified to a higher classification in this final rule.

IV. How will areas that were voluntarily reclassified under the 1997 ozone NAAQS be addressed?

A. Summary of Proposed Reclassification of Selected Areas

CAA section 181(b)(3) provides that a state may voluntarily request that the EPA reclassify a nonattainment area within the state to a higher classification. The EPA has no discretion to deny such requests. Once an area is reclassified to a higher classification, it becomes subject to the associated additional planning and control requirements for that higher classification as well and must attain the standard no later than the later maximum attainment date for that classification.

There are seven areas for which states requested a voluntary reclassification with respect to the 1997 ozone NAAQS. The EPA has granted voluntary reclassification requests for six of these areas, and is in the process of completing the request for one area.[12] These areas are initially classified for the 2008 ozone NAAQS with a lower classification than the areas have for the 1997 ozone NAAQS. Moreover, the maximum attainment date for the 2008 ozone NAAQS based on that lower classification would be before the maximum attainment date for the area for the less stringent 1997 ozone NAAQS. The EPA proposed to interpret the voluntary reclassification requests for the 1997 ozone NAAQS for such areas also to apply for the more stringent 2008 ozone NAAQS unless the state were to expressly request otherwise. Based on discussions with affected areas, we believed it was reasonable to expect that in most instances, where a state requested a voluntary reclassification under the less stringent 1997 ozone NAAQS, it would make the same request for the 2008 ozone NAAQS. The EPA proposed this approach in order to minimize burden on states and to address the concern that some areas might have an earlier attainment date for the more stringent 2008 ozone standard. Moreover, this approach would obviate the need to process separate voluntary reclassification requests for the 2008 NAAQS which might have the effect of delaying certain actions while an area's classification was being modified.

B. Brief Summary of Comments Received

The EPA received several comments on the application of the voluntary reclassification requests for the 1997 ozone NAAQS to the more stringent 2008 ozone NAAQS. Supporters of the proposal included the affected state and local air quality management agencies in California. Almost all of the commenters supporting this approach indicated that an area that needed to request more time to attain the 1997 ozone NAAQS would likely need additional time to meet the more stringent 2008 ozone NAAQS. The State of Texas indicated that it did not want the voluntary reclassification request for the Houston area for the 1997 ozone NAAQS to be interpreted to also apply for the 2008 ozone NAAQS. One commenter questioned the authority of the EPA to apply the reclassification request for an area under the 1997 ozone NAAQS to the area's classification

[10] Technical note to docket # EPA–HQ–OAR–2010–0885, February 2012. ''The Hypothetical Nonattainment Area Projections of 2008–2010 Design Values to 2015.''

[11] Federal Implementation Plans: Interstate Transport of Fine Particulate Matter and Ozone and Correction of SIP Approvals. August 8, 2011; 76 FR 48208.

[12] Ventura County, CA was reclassified from Moderate to Serious (Approved 05/20/2008, 73 FR Page 29073, Effective: 06/19/2008). Houston-Galveston-Brazoria, TX was reclassified from Moderate to Severe-15 (Approved 10/01/2008, 73 FR Page 56983, Effective: 10/31/2008). Reclassification of the Los Angeles-South Coast, San Joaquin Valley, Riverside County, and Sacramento Metro areas (May 5, 2010, 75 FR 24409) became effective June 4, 2010. The EPA is in the process of approving the requested voluntary reclassification of West Mojave Desert, CA from Moderate to Severe.

under the 2008 ozone NAAQS. These comments, and the EPA's responses, are discussed in more detail in the Response to Comments document in the docket.

C. Final Action

Once the initial area designations and classifications for the 2008 ozone NAAQS are completed, the CAA provides three mechanisms for addressing nonattainment areas that may not be attaining or are not able to attain by the attainment date provided for their classification. First, section 181(a)(4) provides that within 90 days of the effective date of designation and classification, the Administrator may exercise discretion to reclassify an area to a higher classification if its DV is within 5 percent of the DV range of the higher classification.[13] Any state interested in taking advantage of this flexibility should submit a request to the EPA in sufficient time for the Administrator to make a determination within the 90 days provided.

The second mechanism, as provided in section 181(b)(3), allows a state to voluntarily request at any time that the EPA reclassify the area to a higher classification. The EPA has no discretion to deny such requests. Once an area is reclassified to a higher classification, it becomes subject to the associated additional planning and control requirements for that higher classification and must attain the standard no later than the later maximum attainment date for that classification. Any state may request a voluntary reclassification under the 2008 ozone NAAQS at any time prior to the area's attainment deadline.

The third mechanism, as provided in section 181(b)(2), requires that an area be reclassified to the next higher classification (i.e., ''bumped-up'') if the EPA determines that the area has failed to attain the standard by the area's attainment date and does not qualify for a 1-year attainment date extension as allowed under CAA section 181(b)(2).[14] Areas classified as Severe are not reclassified to Extreme, as provided under CAA section 181(b)(2)(A), but instead are subject to other requirements as provided in section 181(b)(4).

The areas for which states requested a voluntary reclassification would initially have been classified with a lower classification with an earlier maximum attainment date for the more stringent 2008 NAAQS than the area had for the 1997 NAAQS. At the time the EPA issued the proposed rule, we believed it likely that these areas would as a result have requested a similar reclassification for the 2008 NAAQS. The EPA is obligated to approve such voluntary reclassification requests if made. During the comment period, the State of California confirmed that it wished for the EPA to interpret its voluntary reclassification requests for areas within the state for the 1997 ozone NAAQS to also apply for the 2008 ozone NAAQS. The State of Texas indicated that it did not wish for the EPA to interpret its reclassification request for the 1997 ozone NAAQS for the Houston area as applying to the 2008 NAAQS. Therefore, we are treating the prior requests made for the nonattainment areas in California listed in Table 3 as requests that also apply to the 2008 ozone NAAQS. This final rule reduces the burden on the State of California and the affected air management districts by obviating the need to go through a separate process to request bump-up for the 2008 NAAQS.

TABLE 3—AREAS RECEIVING VOLUNTARY RECLASSIFICATION UNDER THE 2008 OZONE NAAQS

Nonattainment area	State	Initial 2008 ozone NAAQS classification	Voluntary reclassification under 2008 ozone NAAQS
Los Angeles-South Coast Air Basin	CA	Serious	Extreme.
San Joaquin Valley	CA	Serious	Extreme.
Riverside County (Coachella Valley)	CA	Moderate	Severe.
Sacramento Metro	CA	Serious	Severe.
Ventura County	CA	Moderate	Serious.
Western Mojave	CA	Moderate	Severe.

V. What are the attainment deadlines for each classification?

A. Summary of Proposed Attainment Deadlines

The CAA provides that the primary NAAQS attainment dates for areas subject to subpart 2 must be as expeditious as practicable but no later than the deadlines provided in the subpart 2 classification table in CAA section 181(a)(1). The deadlines for attainment in the subpart 2 classification table are specified in terms of a certain number of years from the date of enactment of the 1990 Amendments to the CAA (i.e., November 15, 1990). For instance, the attainment date for Moderate areas is expressed as ''6 years after November 15, 1990.'' Because these time periods are clearly inappropriate for a new ozone standard promulgated in 2008, we proposed to interpret the attainment deadlines in the subpart 2 classification table as they would apply to the 2008 ozone NAAQS.

The EPA proposed two options for establishing the maximum attainment dates for areas in each nonattainment classification. Under the first option, the attainment dates would be the precise number of years specified in Table 1 with such time period running from the effective date of designation. Under the second option, the attainment dates would be December 31 of the year that is the specified number of years in Table 1 after the effective date of designation.

The first option, which was the same approach we took for the 1997 ozone NAAQS, would interpret ''year'' in the subpart 2 classification table to mean consecutive 365-day periods,[15] and we would substitute ''after the effective date of designation'' for the CAA's ''after November 15, 1990'' language in the subpart 2 classification table. Under this approach, the attainment deadline would fall a precise number of years after the effective date of designation.

[13] This CAA provision also provides the same authority for reclassifying areas to a lower classification. Since the vast majority of nonattainment areas for the 2008 NAAQS are classified Marginal, very few areas are eligible to request a reclassification to a lower classification. We anticipate that no states will request a reclassification to a lower classification because our analyses indicate that these areas will need longer than 3 years to attain the NAAQS and additional controls will be necessary for attainment.

[14] We note that for purposes of the 1997 ozone NAAQS, we promulgated a regulation interpreting CAA section 181(b)(4) for purposes of an 8-hour ozone NAAQS. 40 CFR 51.907. We anticipate that we will propose a similar regulation for the 2008 ozone standard as part of the proposed implementation rule.

[15] Except in the case of a leap year, where the year would be a rolling 366-day period.

For the second option, the attainment date would be specified as a certain number of years from the end of the calendar year in which an area's nonattainment designation is effective (i.e., from December 31, 2012). The EPA explained in its proposal that where the designation is effective late in the ozone season, as we expected to be the case for the 2008 ozone NAAQS, the first option had the effect of providing one less complete ozone season for areas to improve their air quality than was accorded areas under the CAA as amended in 1990. We described that under the first option, a Marginal area effectively would have only two full ozone seasons following the effective date of designation to improve its air quality in order to attain by its attainment date. This is because attainment is based on three full ozone seasons of air quality data; thus in order to attain ''by'' its attainment date, the area could not consider air quality for an ozone season during which the attainment date falls.

We explained our belief that the second option is consistent with the time periods provided for attainment of the 1-hour ozone NAAQS at the time the CAA was amended. The CAA Amendments were enacted on November 15, 1990, after the end of the ozone season for virtually all areas, and for the few areas that had year-round ozone seasons, the EPA interpreted the Act to allow consideration of air quality in the attainment year even though the attainment date fell on November 15. Thus, when the CAA was amended in mid-November 1990, 1-hour Marginal areas had three full ozone seasons to achieve any reductions necessary for attainment, and Moderate areas had six full ozone seasons, because the attainment deadline was the anniversary of the enactment of the 1990 CAA (November 15).

B. Brief Summary of Comments Received

The EPA received numerous comments on the attainment deadlines proposal. A few commenters supported the first option based on what they believed to be a plain reading of the CAA. A number of commenters opposed the first option, because it would not allow air quality data from the attainment year to be used in determining if the area attained the NAAQS by the deadline. Most of the commenters supported the adoption of the second option believing that it was most consistent with the 1990 CAA Amendments and that it would ensure that at least three full ozone seasons of data following designation (2013–2015) would be used for Marginal areas (and six (2013–2018) for Moderate areas, etc.) to determine attainment with the 2008 ozone NAAQS. Those opposing the second option indicated it would result in further delays in implementing controls in areas required to attain the 2008 ozone NAAQS, and that it arbitrarily endangers human health. These comments, and the EPA's responses, are discussed in more detail in the Response to Comments document in the docket.

C. Final Action

The EPA is finalizing the second proposed option. Attainment deadlines for the 2008 ozone NAAQS nonattainment areas will be December 31 of the calendar year that is the number of years specified for each classification in Table 1 with the number of years running from 2012. The EPA believes that this approach is appropriate for several reasons. First, we believe it is consistent with the intent of Congress at the time the CAA Amendments of 1990 were enacted. Since ozone seasons for most areas run during the spring, summer and fall,[16] the CAA, as amended in 1990, allowed Marginal areas three full ozone seasons to attain and maintain the NAAQS (and six full ozone seasons for Moderate areas, etc.) after the time that areas were designated and classified by operation of law at the time of enactment of the CAA Amendments. If the attainment date runs from the effective date of designation (i.e., mid-2012), to the extent measures beyond federal measures or state measures that are already in place would be needed for attainment of the 2008 ozone NAAQS by Marginal areas, states would have 18 to 21 months[17] to adopt and implement such measures no later than the beginning of the 2014 ozone season. This is less time than such areas had for purposes of the 1-hour ozone standard under the CAA as amended in 1990. At that time, states with Marginal areas had over two years to adopt and implement such measures prior to the final ozone season used for purposes of determining attainment.[18] In addition, this approach is consistent with the regulatory provisions specifying how to determine whether an area has attained the 2008 ozone NAAQS, which require an evaluation of monitoring data from 3 consecutive calendar years running from January 1 to December 31 of each year.

Accordingly, areas initially classified as Marginal are required to attain the 2008 ozone NAAQS no later than December 31, 2015, and the EPA will evaluate whether the area attained the NAAQS based on monitored ozone data from 2013–2015. Areas initially classified as Moderate are required to attain the 2008 ozone NAAQS no later than December 31, 2018, and the EPA will evaluate whether the area attained the NAAQS based on monitored ozone data from 2016–2018. Serious, Severe, and Extreme areas are required to attain the 2008 ozone NAAQS by December 31, 2021, 2027 and 2032, respectively. Table 4 summarizes the final attainment deadlines for all classification categories.

[16] A few of the most southern areas in the country do have a year-round ozone season. For purposes of the 1-hour NAAQS, the EPA effectively interpreted the November 15 attainment date as the end of the calendar year (i.e., the end of calendar years 1993, 1996, 1999, 2005, 2007 and 2010).

[17] The ozone season for all areas of California, Nevada, Arizona, Southern Texas and Southern Louisiana starts in January, which would provide 18 months for areas classified as Marginal in such states to adopt and implement any additional measures needed for attainment. The ozone season for all areas of Colorado, Northern Texas, Northern Louisiana, Alabama, Mississippi, Georgia, Florida, Tennessee and Kentucky starts in March, which would provide 20 months for areas classified as Marginal in such states to adopt and implement any additional measures needed for attainment. The ozone season for all other areas designated nonattainment for the 2008 NAAQS begins in April, which would provide 21 months for areas classified as Marginal in such states to adopt and implement any additional measures needed for attainment.

[18] The same is true for the higher classifications if the attainment date falls in the middle of the year. For example, under Option 1, Moderate areas would have approximately 4½ years to adopt and implement measures necessary to attain the 2008 ozone NAAQS (i.e., no later than the beginning of the 2016 ozone season, which would be the final ozone season relied on for attainment), whereas at the time of the CAA Amendments of 1990, Moderate areas had approximately 5 years to adopt and implement measures prior to the beginning of the 1996 ozone season, which was the final ozone season considered for determining whether an area attained by the November 1996 Moderate area attainment date.

TABLE 4—ATTAINMENT DATES FOR THE 2008 PRIMARY OZONE NAAQS

Classification	Attainment date	Attainment dates for areas designated in 2012
Marginal	December 31 of the calendar year 3 years from the date of designation	December 31, 2015.
Moderate	December 31 of the calendar year 6 years from the date of designation	December 31, 2018.
Serious	December 31 of the calendar year 9 years from the date of designation	December 31, 2021.
Severe	December 31 of the calendar year 15 years from the date of designation	December 31, 2027.
Extreme	December 31 of the calendar year 20 years from the date of designation	December 31, 2032.

VI. When is the EPA revoking the 1997 ozone NAAQS for transportation conformity purposes?

A. Summary of Proposal

Transportation conformity is required under CAA section 176(c) to ensure that transportation plans, transportation improvement programs (TIPs) and federally supported highway and transit projects are consistent with (''conform to'') the purpose of the SIP. Conformity to the purpose of the SIP means that transportation activities will not cause new air quality violations, worsen existing violations, or delay timely attainment of the relevant NAAQS or interim reductions and milestones. The EPA's Transportation Conformity Rule (40 CFR 51.390 and Part 93, subpart A) establishes the criteria and procedures for determining whether transportation activities conform to the SIP.

The EPA proposed to revoke the 1997 ozone NAAQS one year after the effective date of designations for the 2008 ozone NAAQS for transportation conformity purposes only. As the EPA described in the proposal, revoking the 1997 ozone NAAQS for transportation conformity purposes would bring certainty to the transportation planning process in ozone nonattainment and maintenance areas. It would also ensure that backsliding does not occur for purposes of transportation conformity as areas designated nonattainment for the 2008 ozone NAAQS will be required to use adequate or approved SIP motor vehicle emissions budgets for the 1997 ozone NAAQS or 1-hour ozone NAAQS, if the area has such SIP budgets for one of these ozone NAAQS, until SIP budgets are found adequate or are approved for the 2008 ozone NAAQS as required by recent court decisions discussed below and as required by CAA 176(c)(1) and by the transportation conformity rule (40 CFR 93.109(c)(2)).[19,20] Specifically, CAA section 176(c)(1) states, in part, ''No metropolitan planning organization designated under section 134 of Title 23 shall give its approval to any project, program, or plan which does not conform to an implementation plan approved or promulgated under section 7410 of this title.'' Under the EPA's regulations (40 CFR 93.109(c)(2)), adequate or approved motor vehicle emissions budgets for a prior NAAQS must be used in transportation conformity determinations for a revised NAAQS until such time that budgets for the revised NAAQS are either found adequate or are approved. The EPA is finalizing this limited revocation of the 1997 ozone NAAQS at this time to provide certainty to the transportation planning process. In a subsequent rulemaking the EPA will consider whether to also revoke the 1997 ozone NAAQS on the same timeline for all other purposes.

This approach was the same approach the EPA used to transition from the 1-hour ozone NAAQS to the more stringent 1997 ozone NAAQS. For that transition, our Phase 1 implementation rule for the 1997 ozone NAAQS revoked the 1-hour ozone NAAQS for all purposes one year after the effective date of the initial area designations for the 1997 ozone NAAQS. *See* 69 FR 23954. The Phase 1 rule also established comprehensive anti-backsliding provisions to ensure that requirements for the 1-hour ozone NAAQS would continue in place as areas transitioned to implementing the more stringent 1997 ozone NAAQS.

The revocation of the 1-hour standard and the associated anti-backsliding provisions were the subject of litigation. In its December 2006 decision on that challenge, as modified following rehearing, the Court held with respect to the anti-backsliding approach for transportation conformity that 1-hour motor vehicle emissions budgets must be used where such budgets have been found adequate or approved, as part of 8-hour conformity determinations until 8-hour motor vehicle emissions budgets are available (*South Coast Air Quality Management District* v. *EPA,* 472 F.3d at 882). In addition, the Court affirmed more broadly that in order for transportation conformity determinations to fulfill the requirements of CAA section 176(c)(1), motor vehicle emissions budgets for a prior NAAQS must be used in transportation conformity determinations under a revised NAAQS until emissions budgets for the revised NAAQS are either found adequate or are approved, but that conformity determinations need not be made for a revoked standard. Therefore, areas designated nonattainment for the 2008 ozone NAAQS that have adequate or approved SIP budgets for either the 1997 ozone NAAQS or the 1-hour ozone NAAQS must continue to use such budgets in transportation conformity determinations until budgets for the 2008 ozone NAAQS are found adequate or are approved.[21]

Similar to our rationale in the Phase 1 rule for implementation of the 1997 ozone NAAQS, we explained at proposal that we believe this approach makes the most sense because it would result in only one ozone NAAQS—the 2008 ozone NAAQS—applying for purposes of transportation conformity, after the end of the 1-year transportation conformity grace period that applies to newly designated nonattainment areas (CAA section 176(c)(6)). If the 1997

[19] A motor vehicle emissions budget is that portion of the total allowable emissions defined in the submitted or approved control strategy implementation plan revision or maintenance plan for a certain date for the purpose of meeting reasonable further progress milestones or demonstrating attainment or maintenance of the NAAQS, for any criteria pollutant or its precursors, allocated to highway and transit vehicle use and emissions.

[20] On March 14, 2012, the EPA finalized a revision to the transportation conformity rule, which among other things revised the rule to specifically require that a nonattainment area that has approved or adequate motor vehicle emissions budgets in an applicable implementation plan or implementation plan submission for another NAAQS for the same pollutant must use those budgets in transportation conformity determinations until motor vehicle emissions budgets for the current NAAQS are submitted by the state and found adequate or are approved by the EPA. This revision to the conformity rule was effective on April 13, 2012. (77 FR 14979.)

[21] Areas without adequate or approved SIP budgets for either the 1997 ozone NAAQS or the 1-hour ozone NAAQS are required to demonstrate conformity using one or both of the interim emissions tests depending on their classification as required by 40 CFR 93.119.

ozone NAAQS were to remain in place after conformity applies for the 2008 ozone NAAQS, metropolitan planning organizations and other state, local, and federal transportation and air quality agencies in areas that are currently nonattainment or maintenance for the 1997 ozone NAAQS and will be designated nonattainment for the 2008 ozone NAAQS would be required to implement the transportation conformity program for both ozone NAAQS concurrently. This could lead to unnecessary complexity for conformity determinations, especially if an area's boundaries for the two ozone NAAQS differ from one another and the same test of conformity cannot be used for both ozone NAAQS. Even where an area's boundaries are unchanged, different analysis years under the conformity rules may be required for each ozone NAAQS. Furthermore, we believe that it is more important to determine conformity for the new 2008 ozone NAAQS that is more protective of health and welfare. Therefore, for transportation conformity purposes, this final rule provides a seamless transition from demonstrating conformity for the 1997 ozone NAAQS to demonstrating conformity for the 2008 ozone NAAQS. Revoking the 1997 ozone NAAQS one year after the effective date of designations for the limited purpose of transportation conformity would leave no gap in conformity's application in any 2008 ozone nonattainment area.

B. Final Date for Revoking the 1997 Ozone NAAQS for Transportation Conformity Purposes

The EPA received many comments regarding the revocation of the 1997 ozone NAAQS for purposes of transportation conformity. Most of the commenters supported revoking the 1997 ozone NAAQS for transportation conformity purposes one year after the effective date of designations for the 2008 ozone NAAQS, as proposed, because this would minimize the burden on states, and focus efforts on the more stringent 2008 ozone NAAQS. Those opposing this option did so as a result of concerns about backsliding and the legality of revoking the 1997 ozone NAAQS at all. Several other comments were received that were directed at topics such as general conformity and revocation of the 1997 ozone NAAQS for other purposes that will be addressed in a subsequent rule addressing SIP requirements for the 2008 ozone NAAQS. These comments, and the EPA's responses, are discussed in more detail in the Response to Comments document in the docket. After considering the comments and for the reasons described above, the EPA is finalizing the proposed revocation.

This final rule does not revoke the 1997 ozone NAAQS for purposes other than transportation conformity. A subsequent proposal addressing SIP requirements for the 2008 ozone NAAQS will cover the broader anti-backsliding requirements that might apply if the 1997 standard is revoked for purposes other than transportation conformity.

VII. Statutory and Executive Order Reviews

A. Executive Order 12866: Regulatory Planning and Review and Executive Order 13563: Improving Regulation and Regulatory Review

This action is not a ''significant regulatory action'' under the terms of Executive Order 12866 (58 FR 51735, October 4, 1993) and is therefore not subject to review under Executive Orders 12866 and 13563 (76 FR 3821, January 21, 2011).

B. Paperwork Reduction Act

This action does not impose an information collection burden under the provisions of the *Paperwork Reduction Act,* 44 U.S.C. 3501 *et seq.* Burden is defined at 5 CFR 1320.3(b).

The final Classifications Rule for the 2008 ozone NAAQS establishes the air quality thresholds associated with each classification, which is assigned by operation of law at the time of designation as provided in section 181(a) of the CAA. It also reclassifies six areas in California to a higher classification, consistent with the State of California's previous request to reclassify such areas for the 1997 ozone NAAQS. This rule establishes the attainment date as December 31st of the year that is the number of years specified in Table 1 in CAA section 182(a) running from the year of designation (i.e., 2012). This rule also revokes the 1997 ozone NAAQS for transportation conformity purposes only. This limited revocation will bring certainty to the transportation conformity process consistent with prior court decisions and CAA section 176(c). This rule, in conjunction with another implementation rule we plan to propose in the future, will help states identify planning requirements that apply for purposes of attaining and maintaining the 2008 ozone NAAQS. No new information needs to be collected from the states as a result of this final rule.

C. Regulatory Flexibility Act

The Regulatory Flexibility Act (RFA) generally requires an agency to prepare a regulatory flexibility analysis of any regulation subject to notice and comment rulemaking requirements under the Administrative Procedures Act or any other statute unless the agency certifies the rule will not have a significant economic impact on a substantial number of small entities. Small entities include small businesses, small organizations, and small governmental jurisdictions.

For purposes of assessing the impacts of these final rules on small entities, small entity is defined as: (1) A small business as defined in the Small Business Administration's (SBA) regulations at 13 CFR 121.201; (2) a small governmental jurisdiction that is a government of a city, county, town, school district or special district with a population of less than 50,000; and (3) a small organization that is any not-for-profit enterprise which is independently owned and operated and is not dominant in its field.

The CAA requires the EPA to designate areas and provides for nonattainment areas to be classified by operation of law at the time of designation, and allows areas to request reclassification to a higher classification. This rule establishes the thresholds that define these initial classifications and reclassifies some areas, and also establishes the attainment deadline for each classification. The CAA also requires that nonattainment and maintenance areas make transportation conformity determinations. This rule revokes the 1997 ozone NAAQS one year after the effective date of designations so that areas designated nonattainment for the 2008 ozone NAAQS are required to address conformity requirements for only the more protective 2008 ozone NAAQS.

After considering the economic impacts of this final rule on small entities, the EPA certifies that this action will not have a significant economic impact on a substantial number of small entities. This final rule will not impose any requirements on small entities.

D. Unfunded Mandates Reform Act

This action contains no federal mandate under the provisions of Title II of the Unfunded Mandates Reform Act of 1995 (UMRA), 2 U.S.C. 1531–1538 for state, local, and tribal governments, in the aggregate, or the private sector. This action imposes no enforceable duty on any state, local or tribal governments or the private sector. Therefore, this action is not subject to the requirements of section 202 and 205 of the UMRA.

This action is not subject to the requirements of section 203 of UMRA because it contains no regulatory requirements that might significantly or uniquely affect small governments.

E. Executive Order 13132: Federalism

This action does not have federalism implications. It will not have substantial direct effects on the states, on the relationship between the national government and the states, or on the distribution of power and responsibilities among the various levels of government, as specified in Executive Order 13132. The requirements to designate nonattainment areas, which are then classified by operation of law, as well as the requirement to grant reclassification requests are imposed by the CAA. Thus, Executive Order 13132 does not apply to these final regulations.

Although this action does not have federalism implications as defined in Executive Order 13132, the EPA recognizes that the adoption in 2008 of the more health-protective ozone standard has triggered CAA requirements for state agencies responsible for managing air quality programs. Under the CAA, achieving these health benefits requires the combined efforts of the federal, state, and local governments, each accomplishing the tasks for which they are best suited. In the spirit of Executive Order 13132 and consistent with the EPA policy to promote communications between the EPA and state and local governments, the EPA solicited comments on the proposal to this final rule from state and local officials.

F. Executive Order 13175: Consultation and Coordination With Indian Tribal Governments

This action does not have tribal implications, as specified in Executive Order 13175 (65 FR 67249, November 9, 2000). The final rules do not have a substantial direct effect on one or more Indian tribes under these regulatory revisions, and does not significantly or uniquely affect the communities of Indian tribal governments. Furthermore, these final regulatory revisions do not affect the relationship or distribution of power and responsibilities between the federal government and Indian tribes. The CAA and the Tribal Air Rule establish the relationship of the federal government and tribes in developing plans to attain the NAAQS, and these revisions to the regulations do nothing to modify that relationship. These proposed regulatory revisions do not have tribal implications. Thus, Executive Order 13175 does not apply to this action.

The EPA solicited comment on the proposal for this final action from tribal officials.

G. Executive Order 13045: Protection of Children From Environmental Health and Safety Risks

The EPA interprets Executive Order 13045 (62 FR 19885, April 23, 1997) as applying only to those regulatory actions that concern health or safety risks, such that the analysis required under section 5–501 of the Executive Order has the potential to influence the regulation. This action is not subject to Executive Order 13045 because it does not establish an environmental standard intended to mitigate health or safety risks.

H. Executive Order 13211: Actions Concerning Regulations That Significantly Affect Energy Supply, Distribution, or Use

This action is not subject to Executive Order 13211 (66 FR 28355 (May 22, 2001)), because it is not a significant regulatory action under Executive Order 12866.

I. National Technology Transfer and Advancement Act

Section 12(d) of the National Technology Transfer Advancement Act of 1995 (NTTAA), Public Law 104–113, section 12(d) (15 U.S.C. 272 note) directs the EPA to use voluntary consensus standards in its regulatory activities unless to do so would be inconsistent with applicable law or otherwise impractical. The voluntary consensus standards are technical standards (e.g., materials specifications, test methods, sampling procedures, and business practices) that are developed or adopted by voluntary consensus standards bodies. NTTAA directs the EPA to provide Congress, through OMB, explanations when the agency decides not to use available and applicable voluntary consensus standards.

These final revisions to the regulations do not involve technical standards. Therefore, the EPA did not consider the use of any voluntary consensus standards.

J. Executive Order 12898: Federal Actions To Address Environmental Justice in Minority Populations and Low-Income Populations

Executive Order 12898 (59 FR 7629 (Feb. 16, 1994)) establishes federal executive policy on environmental justice. Its main provision directs federal agencies, to the greatest extent practicable and permitted by law, to make environmental justice part of their mission by identifying and addressing, as appropriate, disproportionately high and adverse human health or environmental effects of their programs, policies, and activities on minority populations and low-income populations in the United States.

The EPA has determined that this final rule will not have disproportionately high and adverse human health or environmental effects on minority or low-income populations because it does not affect the level of protection provided to human health or the environment. The final regulations establish classification thresholds and attainment deadlines for designated nonattainment areas for the 2008 ozone NAAQS, which are designed to protect all segments of the general populations. As such, they do not adversely affect the health or safety of minority or low-income populations and are designed to protect and enhance the health and safety of these and other populations. Today's action also revokes the 1997 ozone NAAQS for transportation conformity purposes only. Such a revocation would not lead to disproportionately high and adverse human health or environmental effects on minority or low-income populations as the CAA requires transportation conformity to apply in any area that is designated nonattainment or maintenance by the EPA. This final rule ensures that transportation conformity is demonstrated in all areas that are designated nonattainment for the more protective 2008 ozone NAAQS.

K. Congressional Review Act

The Congressional Review Act, 5 U.S.C. 801 *et seq.,* as added by the Small Business Regulatory Enforcement Fairness Act of 1996, generally provides that before a rule may take effect, the agency promulgating the rule must submit a rule report, which includes a copy of the rule, to each House of the Congress and to the Comptroller General of the United States. The EPA will submit a report containing this rule and other required information to the U.S. Senate, the U.S. House of Representatives, and the Comptroller General of the United States prior to publication of the rule in the **Federal Register**. A Major rule cannot take effect until 60 days after it is published in the **Federal Register**. This action is not a ''major rule'' as defined by 5 U.S.C. 804(2). This rule will be effective 60 day s after publication in the **Federal Register**.

VIII. Statutory Authority

The statutory authority for this action is provided by sections 110; 176; 181; and 301(a)(1) of the CAA, as amended (42 U.S.C. 7409; 42 U.S.C. 7506; 42 U.S.C. 7511; 42 U.S.C. 7601(a)(1)).

List of Subjects

40 CFR Part 50

Environmental protection, Air pollution control, Carbon monoxide, Lead, Nitrogen dioxide, Ozone, Particulate matter, Sulfur oxides.

40 CFR Part 51

Air pollution control, Intergovernmental relations, Ozone, Particulate matter, Transportation, Volatile organic compounds.

Dated: April 30, 2012 .

Lisa P. Jackson,

Administrator.

For the reasons stated in the preamble, Title 40, Chapter I of the Code of Federal Regulations is amended as follows:

PART 50—NATIONAL PRIMARY AND SECONDARY AMBIENT AIR QUALITY STANDARDS

■ 1. The authority citation for Part 50 continues to read as follows:

Authority: 42 U.S.C. 7401, *et seq.*

■ 2. Section 50.10 is amended by adding a paragraph (c) to read as follows:

§ 50.10 National 8-hour primary and secondary ambient air quality standards for ozone.

* * * * *

(c) The 1997 ozone NAAQS set forth in paragraph (a) of this section will no longer apply to an area for transportation conformity purposes 1 year after the effective date of the designation of the area for the 2008 ozone NAAQS pursuant to section 107 of the CAA. The 1997 ozone NAAQS set forth in this section will continue to remain applicable to all areas for all other purposes notwithstanding the promulgation of the 2008 ozone NAAQS under § 50.15 or the designation of areas for the 2008 ozone NAAQS. Area designations and classifications with respect to the 1997 ozone NAAQS are codified in 40 CFR part 81.

PART 51—REQUIREMENTS FOR PREPARATION, ADOPTION, AND SUBMITTAL OF IMPLEMENTATION PLANS

■ 3. The authority citation for Part 51 continues to read as follows:

Authority: 23 U.S.C. 101; 42 U.S.C. 7401–7671q.

■ 4. Part 51 is amended by adding subpart AA to read as follows:

Subpart AA—Provisions for Implementation of the 2008 Ozone National Ambient Air Quality Standards

Sec.
51.1100 Definitions.
51.1101 Applicability of Part 51.
51.1102 Classification and nonattainment area planning provisions.
51.1103 Application of classification and attainment date provisions in CAA section 181 of subpart 2 to areas subject to § 51.1102(a).

Subpart AA—Provisions for Implementation of the 2008 Ozone National Ambient Air Quality Standards

§ 51.1100 Definitions.

The following definitions apply for purposes of this subpart. Any term not defined herein shall have the meaning as defined in 40 CFR 51.100.

(a) *1-hour NAAQS* means the 1-hour primary and secondary ozone national ambient air quality standards codified at 40 CFR 50.9.

(b) *1997 NAAQS* means the 1997 8-hour primary and secondary ozone national ambient air quality standards codified at 40 CFR 50.10.

(c) *2008 NAAQS* means the 2008 8-hour primary and secondary ozone NAAQS codified at 40 CFR 50.15.

(d) *1-hour ozone design value* is the 1-hour ozone concentration calculated according to 40 CFR part 50, Appendix H and the interpretation methodology issued by the Administrator most recently before the date of the enactment of the CAA Amendments of 1990.

(e) *8-hour ozone design value* is the 8-hour ozone concentration calculated according to 40 CFR part 50, Appendix P.

(f) *CAA* means the Clean Air Act as codified at 42 U.S.C. 7401—7671q (2010).

(g) *Attainment area* means, unless otherwise indicated, an area designated as either attainment, unclassifiable, or attainment/unclassifiable.

(h) *Attainment year ozone season* shall mean the ozone season immediately preceding a nonattainment area's maximum attainment date.

(i) *Designation for the 2008 NAAQS* shall mean the effective date of the designation for an area for the 2008 NAAQS.

(j) *Higher classification/lower classification.* For purposes of determining whether a classification is higher or lower, classifications under subpart 2 of part D of title I of the CAA are ranked from lowest to highest as follows: Marginal; Moderate; Serious; Severe; and Extreme.

(k) *Initially designated* means the first designation that becomes effective for an area for the 2008 NAAQS and does not include a redesignation to attainment or nonattainment for the 2008 NAAQS.

(l) *Maintenance area* means an area that was designated nonattainment for a specific NAAQS and was redesignated to attainment for that NAAQS subject to a maintenance plan as required by CAA section 175A.

(m) *Nitrogen Oxides (NO_X)* means the sum of nitric oxide and nitrogen dioxide in the flue gas or emission point, collectively expressed as nitrogen dioxide.

(n) *Ozone season* means for each state, the ozone monitoring season as defined in 40 CFR part 58, Appendix D, section 4.1(i) for that state.

§ 51.1101 Applicability of Part 51.

The provisions in subparts A–X of part 51 apply to areas for purposes of the 2008 NAAQS to the extent they are not inconsistent with the provisions of this subpart.

§ 51.1102 Classification and nonattainment area planning provisions.

An area designated nonattainment for the 2008 ozone NAAQS will be classified in accordance with CAA section 181, as interpreted in § 51.1103(a), and will be subject to the requirements of subpart 2 of part D of title I of the CAA that apply for that classification.

§ 51.1103 Application of classification and attainment date provisions in CAA section 181 of subpart 2 to areas subject to § 51.1102.

(a) In accordance with CAA section 181(a)(1), each area designated nonattainment for the 2008 ozone NAAQS shall be classified by operation of law at the time of designation. The classification shall be based on the 8-hour design value for the area at the time of designation, in accordance with Table 1 below. A state may request a higher or lower classification as provided in paragraphs (b) and (c) of this section. For each area classified under this section, the attainment date for the 2008 NAAQS shall be as expeditious as practicable but not later than the date provided in Table 1 as follows:

TABLE 1—CLASSIFICATION FOR 2008 8-HOUR OZONE NAAQS (0.075 PPM) FOR AREAS SUBJECT TO SECTION 51.1102(A)

Area class		8-hour design value (ppm ozone)	Primary standard attainment date (years after designation for 2008 primary NAAQS)
Marginal	from	0.076	3 years after December 31, 2012.
	up to*	0.086	
Moderate	from	0.086	6 years after December 31, 2012.
	up to*	0.100	
Serious	from	0.100	9 years after December 31, 2012.
	up to*	0.113	
Severe-15	from	0.113	15 years after December 31, 2012.
	up to*	0.119	
Severe-17	from	0.119	17 years after December 31, 2012.
	up to*	0.175	
Extreme	equal to or above	0.175	20 years after December 31, 2012.

* But not including.

(b) A state may request, and the Administrator must approve, a higher classification for any reason in accordance with CAA section 181(b)(3).

(c) A state may request, and the Administrator may in the Administrator's discretion approve, a higher or lower classification in accordance with CAA section 181(a)(4).

(d) The following nonattainment areas are reclassified for the 2008 ozone NAAQS as follows: Serious—Ventura County, CA; Severe—Los Angeles-San Bernardino Counties (West Mojave Desert), Riverside County (Coachella Valley), and Sacramento Metro, CA; Extreme—Los Angeles-South Coast Air Basin, and San Joaquin Valley, CA.

[FR Doc. 2012–11605 Filed 5–18–12; 8:45 am]

BILLING CODE 6560–50–P

FEDERAL REGISTER

Vol. 77 Monday,

No. 98 May 21, 2012

Part IV

Department of Justice

28 CFR Parts 35 and 36

Amendment of Americans With Disabilities Act Title II and Title III Regulations To Extend Compliance Date for Certain Requirements Related to Existing Pools and Spas Provided by State and Local Governments and by Public Accommodations; Final Rule

DEPARTMENT OF JUSTICE

28 CFR Parts 35 and 36

[CRT Docket No. 123; A.G. Order No. 3332–2012]

RIN 1190–AA69

Amendment of Americans With Disabilities Act Title II and Title III Regulations To Extend Compliance Date for Certain Requirements Related to Existing Pools and Spas Provided by State and Local Governments and by Public Accommodations

AGENCY: Department of Justice, Civil Rights Division.

ACTION: Final rule.

SUMMARY: This final rule revises the Department of Justice regulations implementing the Americans with Disabilities Act to extend until January 31, 2013, the compliance date for the application of sections 242 and 1009 of the 2010 Americans with Disabilities Act (ADA) Standards for Accessible Design for existing pools and spas.

DATES: *Effective Date:* This rule will take effect on May 21, 2012.

FOR FURTHER INFORMATION CONTACT: Allison Nichol, Chief, Disability Rights Section, Civil Rights Division, U.S. Department of Justice, at (202) 307–0663 (voice or TTY). This is not a toll-free number. Information may also be obtained from the Department's toll-free ADA Information Line at (800) 514–0301 (voice) or (800) 514–0383 (TTY).

SUPPLEMENTARY INFORMATION:

Background

The Department of Justice published its revised final regulations implementing the Americans with Disabilities Act (ADA) for title II (State and local government services) and title III (public accommodations and commercial facilities) on September 15, 2010. *See* 75 FR 56164, 56236 (September 15, 2010). The revised ADA rules were the result of a six-year process to update the Department's ADA regulations. As part of this process, the Department sought public comment, issuing an Advance Notice of Proposed Rulemaking (ANPRM) on September 30, 2004, 69 FR 58768, and two Notices of Proposed Rulemaking (NPRM) on June 17, 2008, 73 FR 34466 (title II) and 73 FR 34508 (title III). The Department also held a public hearing on the NPRMs and received more than 4,435 written public comments. This process culminated with publication of the Department's final rules on September 15, 2010.

As part of this revision, the Department adopted the 2010 ADA Standards for Accessible Design (''2010 Standards''). A copy of the 2010 ADA Standards is available at *http://www.ada.gov/2010ADAstandards_index.htm*. The 2010 Standards replace the 1991 ADA Standards for Accessible Design and, for the first time, contain specific accessibility requirements for certain types of recreational facilities, including the requirement to provide accessible means of entry and exit to swimming pools, wading pools, and spas. With limited exceptions, the Department's revised ADA title II and title III regulations went into effect on March 15, 2011. The regulations provided that covered entities were not obligated to comply with the 2010 Standards until March 15, 2012 (the compliance date).

The 2010 Standards are based in large part on the 2004 ADA Accessibility Guidelines, which were adopted by the United States Access Board (''Access Board'') in 2004 following a decade-long effort to revise the Board's 1991 ADA Accessibility Guidelines. *See* 69 FR 44084 (July 23, 2004). The ADA requires the Department to issue regulations that include enforceable accessibility standards applicable to facilities subject to title II or title III that are consistent with the ''minimum guidelines'' issued by the Access Board, 42 U.S.C. 12134(c), 12186(c). The Attorney General has sole responsibility for promulgating accessibility standards that fall within the Department's jurisdiction and enforcing the Department's regulations, which include the accessibility standards.

The 2010 Standards set minimum scoping and technical requirements for accessible means of entry (and exit) for newly constructed and altered swimming pools, wading pools, and spas (collectively, ''pools''). The 2010 Standards include requirements for accessible means of entry for large and small pools. These requirements are found at sections 242 and 1009 of the 2010 Standards. Specifically, section 242 provides that large pools (pools with 300 linear feet of pool wall or more) must have two accessible means of entry, one of which must be a pool lift or sloped entry; the other accessible means of entry include a transfer wall, transfer system, or pool stairs. Small pools (pools with less than 300 linear feet of pool wall) must provide at least one accessible means of entry, which must be either a pool lift or a sloped entry.

The 2010 Standards also provide details about what features an accessible means of entry should include. Specifically, section 1009 addresses pool lift requirements such as the location, size of the seat, lifting capacity, and clear floor space, as well as the requirements for sloped entry, transfer wall, transfer system, or pool stairs.

Sections 35.151(d) and 36.406(b) of the respective title II and title III regulations specify that the 2010 Standards only apply to fixed or built-in elements. Sections 35.151(c) and 36.406(a) provide that the 2010 Standards apply to new construction and alterations of covered buildings and facilities.

With regard to existing facilities, the title II rule published in 2010 provided that, as of March 15, 2012, the 2010 Standards apply whenever public entities choose to meet their title II ADA program accessibility obligations by making structural alterations to their existing facilities, 28 CFR 35.150(b)(1).[1] The title III rule published in 2010 provided that on or after March 15, 2012, public accommodations must generally use the 2010 Standards as the benchmark for their ongoing obligation to remove architectural barriers in existing facilities to the extent such compliance is readily achievable. 28 CFR 36.304(d).[2] As discussed below, with respect to the provision of title II program accessibility and title III readily achievable barrier removal, the Department has postponed the compliance date for the specific requirements in the 2010 Standards relating to accessible means of entry for existing pools until May 21, 2012.

Under the ADA, the Department is responsible for providing technical assistance to entities covered by titles II and III to help them understand their obligations under the ADA. 42 U.S.C. 12206(c)(1). Since issuing its revised rule, the Department has developed and published technical assistance documents to assist entities to understand the revised regulations. To

[1] Section 35.150(b)(1) of the title II regulation, which addresses program accessibility in existing facilities, provides state and local governments with flexibility to use other means such as acquisition or redesign of equipment, or reassignment of programs or services to accessible buildings, in lieu of making structural alterations to facilities when they are providing program accessibility in their existing programs, services, or activities.

[2] Section 36.304(d)(1) requires covered entities to apply the alterations provisions of the regulations (except the path of travel provisions) when removing barriers, but only to the extent that it is readily achievable to do so. Section 36.304(d)(2)(iii) provides that elements in existing facilities that are subject to the supplemental requirements, including the accessible means of entry requirements for pools and spas, must be modified to the extent readily achievable to comply with the 2010 Standards.

help educate pool owners and operators concerning the requirements imposed by the Department's 2010 regulations, the Civil Rights Division published a technical assistance document entitled ''ADA 2010 Revised Requirements: Accessible Pools—Means of Entry and Exit'' (the ''TA Document'') on January 31, 2012. Available at *http://www.ada.gov/pools_2010.htm.* This document provided an overview of the new accessibility requirements for pools and discussed the application of the requirements in the context of the longstanding obligations of covered entities to provide readily achievable barrier removal (title III) and program accessibility (title II).

Inquiries received by the Department both prior to the TA Document's publication and in response to the TA Document revealed that there were significant concerns and misunderstandings among a substantial number of pool owners and operators with respect to what was required for title III entities in order to engage in readily achievable barrier removal, or for title II entities to provide program accessibility with respect to their existing pools now that the ADA regulations included minimum scoping and technical requirements for accessible means of entry for pools. Some pool owners and operators believed that taking certain steps would always satisfy their obligations when in fact those steps would not necessarily result in compliance with the ADA regulations. For example, some pool owners and operators believed, incorrectly, that providing non-fixed lifts (lifts that are not attached to the pool deck and often referred to as portable lifts) would in all circumstances achieve compliance with the ADA regulations, even in circumstances where providing a fully compliant lift is readily achievable. Others expressed the view that they would have to close pools due to an inability to provide access, even though the regulations allow pool owners and operators to use non-fixed lifts or no lifts at all in circumstances where the provision of access is not readily achievable. The vast majority of pool owners and operators expressing these concerns were title III entities.

Recognizing the extent of the misunderstandings in determining appropriate compliance when faced with an immediate compliance date, and consistent with Executive Order 13563, ''Improving Regulation and Regulatory Review'' (with its emphasis on promoting predictability and public participation), the Department determined that it would be impracticable and contrary to the public interest to retain the March 15, 2012, compliance date for application of these requirements to existing pools. 77 FR 16163, 16164 (March 20, 2012). Thus, the Department issued a Final Rule extending the date for compliance with sections 242 and 1009 of the 2010 Standards as they relate to existing pools (pools built before March 15, 2012) from March 15, 2012, to May 21, 2012. 77 FR 16163, 16163 (March 20, 2012).[3] The Department's action had no effect on the compliance date for these requirements as they applied to newly constructed pools or pools altered for purposes other than to provide program accessibility or barrier removal (e.g., scheduled alterations or improvements).

Contemporaneously with issuing the rule extending the compliance date for existing pools until May 21, 2012, the Department issued an NPRM seeking public comment regarding whether a longer extension of the compliance date would be appropriate to allow pool owners and operators additional time to meet their obligations with regard to providing access into their existing pools. 77 FR 16196 (March 20, 2012). Specifically, the Department requested comment on a proposed extension that would postpone the required compliance date for sections 242 and 1009 of the 2010 Standards until September 17, 2012—a total of just over 180 days from the original March 15, 2012, compliance date specified in the September 2010 final regulations. The NPRM proposed that this extension would ''provide pool owners and operators additional time to evaluate and comply with their program accessibility and readily achievable barrier removal obligations with respect to sections 242 and 1009 of the 2010 Standards.'' 77 FR at 16198. The Department also anticipated that an extension would serve ''the interest of promoting clear and consistent application of the ADA's requirements to existing facilities.'' 77 FR at 16196. The proposed extension would have no impact on the March 15, 2012, compliance date for new construction and alterations of swimming pools and spas. In addition, the NPRM made it clear that, although the Department was considering extending the compliance date for the application of the requirements to existing pools, the NPRM was not proposing to change those requirements or modify the ADA regulations in any other way and, thus, the Department was not soliciting comments on the merits of the requirements. 77 FR at 16197.

Discussion of Public Comments

In response to its proposal, the Department received approximately 1,915 public comments from individuals with disabilities, organizations representing individuals with disabilities, pool owners and operators, and other entities covered by the regulations. Approximately 1,420 commenters supported the proposal and approximately 495 commenters opposed it. While the vast majority of commenters were concerned about the impact of the requirements on title III public accommodations, there were some comments from title II entities.

Organizations representing the hotel industry and individual owners and operators of hotels and campgrounds provided the largest number of comments in support of postponing the compliance date. Of these comments, approximately 520 were form comments submitted anonymously. Other commenters who supported the proposal included homeowners associations, pool lift manufacturers, individual owners and operators of pools and spas, and some title II entities. Commenters opposed to the proposed extension included many organizations representing persons with disabilities, including veterans with disabilities, numerous individuals with disabilities, and some title II entities. Many comments illustrated the kinds of misunderstandings and concerns that led to the Department's decision to propose the extension. This final rule will not address specific comments about the merits of the requirements for accessible means of entry for pools, except to the extent that they illustrate these misunderstandings or provide support or opposition for the proposed compliance date extension.

The Department received numerous comments opposing a further extension of the effective date for the provisions requiring an accessible means of entry for existing pools. Commenters with disabilities and their families, as well as organizations representing individuals with disabilities, urged the Department not to extend the deadline further. These commenters provided a variety of reasons why the deadline should not be extended. Some commenters objected on the grounds that the regulatory process, which included numerous opportunities for public comment, had yielded carefully constructed

[3] *See* 77 FR at 16163 (''Effective on March 15, 2012, the compliance date for 28 CFR 35.150(b)(1), (b)(2)(ii), and 28 CFR 36.304(d)(2)(iii) for sections 242 and 1009 of the 2010 Standards is delayed to May 21, 2012.''). The referenced sections in 28 CFR for which the compliance date was delayed apply only to existing facilities, not to new construction or alterations.

regulations and accessibility standards. Several commenters noted that entities have had nearly two years to plan for and comply with the revised requirements for access into existing pools and, thus, additional time was unnecessary. One organization representing individuals with disabilities noted that the barrier removal concept has not changed since the ADA was passed in 1990 and that title III entities have had over 20 years and extensive technical assistance on the concept to understand their obligations. The organization believed an additional four months would not yield a better understanding. The same organization felt strongly that the extension was inappropriate for title II entities, which have long been required to address access into their existing pools under the program access requirement.

Many commenters emphasized the negative impact that an extension would have for individuals with disabilities. Commenters stated that an extension would require them to continue to pay full price for a hotel room during the extension period while not having full access to the amenities of the facilities. One commenter took issue with the categorization of pool access as a luxury, stating that access to other amenities, such as restaurants, could similarly be considered luxuries, yet access to such amenities is required for all paying customers.

Some of the most moving comments came from families with individuals with disabilities. Parents of children with disabilities shared their stories of how their children were getting too big for them to carry in and out of the pool safely or with dignity. Several recounted how their older children loved to swim and wanted to partake in family outings to the pool, but then explained that it was difficult to safely transfer a wet and slippery child across a slick pool deck. Parents with disabilities also lamented their inability to join their children in the pool. For these families, an extension of the compliance date for the pool requirements would mean another year of summer vacations without access.

The Department also heard from organizations representing veterans with disabilities who indicated that, after a decade of war, a significant number of service members have returned with injuries and are reintegrating into their communities by participating in adaptive sports and that these individuals should have access to pools and spas in their communities without further delay. One veteran with a disability stated that he had very few methods of exercise that he could use to stay in shape and expressed frustration about having to travel long distances to a pool with a compliant lift for his weekly swim. Many other commenters also stated that swimming was one of the few exercises available to many individuals with disabilities and that the extension would further delay pool access that has been long sought.

Several state-level advisory organizations on disability issues provided comments opposing the extension. These organizations stated that they believed that there had been ample time for title II and title III entities to comply and that delaying implementation further would constitute a roll-back of the ADA. These organizations were especially concerned about the resistance of public accommodations in their states to implement the new requirements and the impact this would have on residents and visitors with disabilities.

The Department also received numerous comments supporting a further extension of the effective date for the provisions requiring an accessible means of entry for existing pools, primarily as they apply to the obligations of title III entities to engage in barrier removal. Many of these commenters supported a longer extension for the compliance period, for a minimum of six additional months. These commenters believed that an extension of the compliance date was necessary in order to give public accommodations sufficient time to fully understand and implement the pool access requirements and to arrange for installation of fixed lifts (lifts that are attached to the pool deck), given that many pool owners and operators had previously believed that portable lifts were permissible even when it was readily achievable to provide a fixed lift.

Two other categories of comments, primarily provided by owners and operators of pools at public accommodations who supported the Department's proposal to extend the compliance date, further underscored the misunderstandings and concerns that have arisen about the pool accessibility requirements adopted in the 2010 Standards. First, some commenters suggested that the requirement that the pool lift be fixed was not part of the title III regulation published by the Department in September 2010, but was, instead, an interpretation the Department later developed outside of the rulemaking process. However, the Department has had a longstanding position that the ADA Standards apply to fixed and built-in elements. *See, e.g.,* Department of Justice, Americans With Disabilities Act, *ADA Title III Technical Assistance Manual Covering Public Accommodations and Commercial Facilities* (Supp. 1994), III–5.3000, available at *http://www.ada.gov/taman3up.html,* (providing that ''[o]nly equipment that is fixed or built in to the facility, is covered by the accessibility standards''). The Department codified that position in both the revised title II and title III regulations, *see* 28 CFR 35.151(d) and 36.406(b). Throughout the six-year process of revising the ADA regulations, the Department stated that the ADA Standards did not apply to freestanding (e.g., non-fixed, moveable, or portable) equipment. For example, the 2004 ANPRM included a section entitled, ''Application of ADA Standards and ADA to Free-Standing Equipment,'' in which the Department stated that the ADA Standards do not apply to portable equipment. *See* 69 FR 58768, 58775 (Sept. 30, 2004) (providing that ''the revised ADA Standards will apply directly only to fixed equipment—as described above, equipment that becomes built into the structure of a facility—and not to free-standing equipment''). The 2008 title III NPRM and the 2010 Final Rules reiterated this point. *See* 73 FR 34508, 34543 (June 17, 2008) (''The Department is proposing a new § 36.406(b) that would clarify that the requirements established by this section, including those contained in the proposed standards (and the 2004 [ADA Accessibility Guidelines]) prescribe the requirements necessary to ensure that fixed or built-in elements in new or altered facilities are accessible to people with disabilities.''); 75 FR 56236, 56303 (Sept. 15, 2010) (''The final [title III] rule contains a new § 36.406(b) that clarifies that the requirements established by this section, including those contained in the 2004 [ADA Accessibility Guidelines], prescribe the requirements necessary to ensure that fixed or built-in elements in new or altered facilities are accessible to individuals with disabilities.'').[4]

Section 36.304(d) of the title III regulation specifies that measures taken to comply with the readily achievable barrier removal requirement must comply with the applicable

[4] Moreover, the Regulatory Impact Analysis (RIA) for the final rule looked at the costs with respect to fixed and built-in elements when analyzing the provisions of the 2010 Standards. With respect to pools, the RIA included both the cost of purchasing a lift as well as the cost of installing the lift for barrier removal in existing pools. *See* Final RIA at pp. 59–60, 283 (July 23, 2010), available at *http://www.ada.gov/regs2010/RIA_2010regs/DOJ%20ADA%20Final%20RIA.pdf.*

requirements for alterations as set forth in § 36.402 and §§ 36.404 through 36.406, which reference the 2010 Standards. Given that the ADA Standards apply only to fixed or built-in elements, the title III regulation requires the use of fixed elements when removing barriers in existing facilities unless it is not readily achievable to do so. Thus, it follows that public accommodations engaged in barrier removal must provide a fixed or built-in lift in existing pools as long as it is readily achievable.

A second group of commenters who owned or operated public accommodations and who supported the extension mistakenly believed that if they could not comply with the pool access requirements of the 2010 Standards (because compliant pool lifts were unavailable or they could not afford to provide a lift, for example), they would be forced to close their pools. This is also a misunderstanding of the ADA regulations. Compliance with the 2010 Standards is only required to the extent that it is ''readily achievable''—a term that means ''easily accomplishable and able to be carried out without much difficulty or expense.'' *See* 28 CFR 36.104. Thus, title III of the ADA does not require that a public accommodation close its pool facility if, for example, compliant pool lifts are not available or if the facility cannot afford such a lift. In such circumstances, a public accommodation can achieve compliance with its ADA obligations without installing a fully compliant pool lift, because that measure would not be ''easily accomplishable'' or ''able to be carried out without much difficulty or expense.'' *Id.* The revised 2010 title III regulation, like the 1991 regulation that preceded it, implements the ''readily achievable'' definition established by Congress in the statute and maintains unchanged the definition of ''readily achievable'' incorporated in the 1991 regulation.

To determine whether providing an accessible means of entry to an existing pool is readily achievable, businesses must use the same general barrier removal analysis that has always applied to other covered elements in existing facilities. Both the ADA statute, which Congress passed in 1990, and the Department's ADA title III regulation, which was originally published in 1991, set out a case-by-case analysis to be used in determining whether removing certain barriers is readily achievable. Specifically, the regulations provide at § 36.104 that in determining whether an action is readily achievable, the factors to be considered include:

(1) The nature and cost of the action;

(2) The overall financial resources of the site or sites involved, the number of persons employed at the site, the effect on expenses and resources, legitimate safety requirements necessary for safe operation, including crime prevention measures, and any other impact of the action on the operation of the site;

(3) The geographic separateness, and the administrative or fiscal relationship of the site or sites in question to any parent corporation or entity;

(4) If applicable, the overall financial resources of any parent corporation or entity, the overall size of the parent corporation or entity with respect to the number of its employees, and the number, type, and location of its facilities; and

(5) If applicable, the type of operation or operations of any parent corporation or entity, including the composition, structure, and functions of the workforce of the parent corporation or entity.[5]

Under this standard, which has applied to places of public accommodation since 1991, hotels and other public accommodations will not be required to close their existing pools if compliance with the applicable ADA Accessibility Standards is not easily accomplishable or able to be carried out without much difficulty or expense. Similarly, the inability of a public accommodation to install a lift due to insufficient space at the side of the pool deck would be addressed by using the barrier removal analysis, which does not require entities to undertake changes that cannot be accomplished without much difficulty or expense.

Several commenters, including a pool lift manufacturer, supported an extension on the basis that there is currently a significant backlog in availability of compliant lifts. They were concerned that if the pool access requirements took effect, pool owners and operators who could not acquire a lift because of a manufacturing backlog would be in violation of the ADA. However, the lack of availability of a compliant lift because of limitations in manufacturing capacity would demonstrate that it is not readily achievable to comply with the requirements, until such time as a lift becomes available.

The Department received a small number of comments from title II entities, the majority of which were from small local governments. Most of these commenters favored the proposed extension. A number of them believed a moveable lift was appropriate to comply with the revised ADA requirements and had not accounted for the costs associated with a fixed pool lift in their yearly budgets. As a result, these entities supported the extension in order to secure additional funding. However, the title II program accessibility requirements allow the use of equipment as an alternative to making structural changes to an existing facility; thus these entities would not necessarily have to provide a fixed lift in order to satisfy their program accessibility obligation.[6]

Some title II entities stated that they would have to close down community pools rather than incur the expense of complying with the regulation. To the contrary the title II program accessibility regulation does not require title II entities to make changes to their programs, services, or activities if the changes would constitute a fundamental alteration or would impose an undue financial and administrative burden. Title II does not require a facility to close when compliance with the program accessibility requirements poses an undue financial and administrative burden. This is the case whether the title II facility in question is a public office, a school, or a swimming pool.

Some of the comments the Department received reflected misconceptions about the abilities of persons with disabilities to participate in the same activities that are afforded persons without disabilities. The ADA was intended, in part, to address these misconceptions.

Without the pool access requirement of the regulations, it is clear that many individuals with disabilities would not be able to avail themselves of pool amenities offered by covered entities. As noted by many commenters opposed to the proposed extension, individuals with disabilities have long awaited the

[5] Since the title III regulation first took effect, the Department has provided extensive technical assistance regarding the readily achievable barrier requirement for existing facilities. The technical assistance material provided by the Department contains examples of the application of this requirement. Pool owners and operators can access information on barrier removal on the Department's ADA Web site, *www.ada.gov.* Publications that address barrier removal include, but are not limited to, the 1993 ADA Title III Technical Assistance Manual (Section III–4.4200), available at *http://www.ada.gov/taman3.html,* the 1996 ADA Guide for Small Businesses (revised and reissued in 1999), which was published in conjunction with the Small Business Administration (''SBA''), available at *http://www.ada.gov/smbusgd.pdf,* and a 2005 online course entitled ''Reaching Out to Customers With Disabilities,'' which is available at *http://www.ada.gov/reachingout/intro1.htm.*

[6] Section 35.150 requires that title II entities operate each service, program or activity, so that when viewed in its entirety, the service, program or activity is readily accessible to and usable by individuals with disabilities.

ADA Accessibility Standards that address access to recreational facilities, such as pools. These comments illustrate the significant impact that a further extension would have on many individuals with disabilities and their families during yet another summer pool season. On the other hand, as stated above and in the Department's NPRM, it is clear to the Department that a significant number of pool owners and operators may continue to have misunderstandings and concerns about their obligations with regard to providing access to existing pools. These misunderstandings have affected pool operators and owners in at least three ways that are relevant to the Department's proposal. First, it appears that some places of public accommodation initially proceeded on the misunderstanding that a portable pool lift would in all circumstances satisfy the pool accessibility requirements of the 2010 Standards. Those pool operators and owners will need time to undertake a fact-specific analysis about whether the installation of a fully compliant pool lift is ''readily achievable,'' and to implement their compliance plan. Second, the comments suggested that at least some pool owners and operators who generally speaking would find installation of a compliant pool lift to be ''readily achievable'' currently are having difficulty locating compliant pool lifts that are available for purchase. The Department believes that this circumstance provides an additional reason to postpone the compliance date, thereby allowing a greater number of covered entities to purchase and install compliant pool lifts. Third, comments received by the Department also raise concerns that, absent an extension, some covered entities might respond to the compliance date by taking steps that the law does not require and that would actually undermine the goal of ensuring that individuals with disabilities obtain the benefits that the regulations sought to ensure—safe and compliant pool access to existing pools when it is readily achievable to provide it. For example, if pool owners and operators close pools because they incorrectly believe that the 2010 Standards require that a fully compliant pool lift must be installed in all cases, those closures will reduce access to pools for everyone, including individuals with disabilities. Similarly, if pool owners and operators are unable to obtain compliant lifts because of the lack of availability, they may unwittingly purchase non-compliant lifts that will not provide safe and independent pool access to persons with disabilities.

After carefully considering all of these factors, including the unique burdens that an additional postponement would impose on individuals with disabilities, the Department has concluded that a further extension of the compliance date is warranted. Although the Department originally proposed a four-month extension until September 17, 2012, based on the breadth of the concerns and the misunderstandings about the requirements expressed in the comments the Department received, the Department has decided to extend the compliance date for sections 242 and 1009 of the 2010 Standards for existing pools subject to title III barrier removal and to title II program access until January 31, 2013. That date is one year from the date that the Department issued its initial guidance clarifying that the ADA regulations required fixed pool lifts, and is still well in advance of next year's swim season. The Department emphasizes that this extension is consistent with Executive Order 13563, which emphasizes the importance of promoting predictability and reducing uncertainty, and which also stresses the value of public participation and an ''open exchange of information and perspectives.''

This longer extension will provide additional time for the Department to continue to educate covered entities about their obligations under the 2010 Standards with regard to providing access into their existing pools, to respond to relevant concerns, and to address misunderstandings that could lead covered entities to take unnecessary and counterproductive steps, thereby allowing all stakeholders to have the same understanding of what is required by the ADA and promoting broader compliance with the rule. The Department also believes that the additional time will allow covered entities to complete the fact-specific evaluation required by the ''readily achievable'' standard, and to implement their compliance plans, including by taking the steps necessary to comply with the pool accessibility requirements of the 2010 Standards.

Section-by-Section Analysis

Section 35.150(b)(1)

Currently, § 35.150(b)(1) specifies that if a public entity chooses to make structural alterations to existing buildings in order to meet its program accessibility obligations, it shall comply with the accessibility requirements set forth in § 35.151. The current title II regulation specifies, at § 35.151(c)(3), that all facilities that are newly constructed or altered on or after March 15, 2012 must comply with the 2010 Standards.[7] The final rule postpones the compliance date, as applied to the requirements for accessible means of entry for existing pools, by adding a new paragraph (b)(4) to § 35.150. The new paragraph reads: ''The requirements set forth in sections 242 and 1009 of the 2010 Standards shall not apply until January 31, 2013, if a public entity chooses to make structural changes to existing swimming pools, wading pools, or spas built before March 15, 2012, for the sole purpose of complying with the program accessibility requirements set forth in this section.

Section 36.304

Section 36.304(d) currently specifies that on or after March 15, 2012, public accommodations must generally use the 2010 Standards as the benchmark for their ongoing obligation to remove architectural barriers in existing facilities to the extent such compliance is readily achievable. The final rule extends the compliance date for applying the barrier removal requirements for accessible means of entry for pools, by adding paragraph (g)(5), which states the following: ''The application of this requirement to facilities built before March 15, 2012, for accessible means of entry for swimming pools, wading pools, and spas as set forth in sections 242 and 1009 of the 2010 Standards shall not apply until January 31, 2013.''

The final rule also modifies the Appendix to § 36.304(d) to reflect the extension of the compliance date.

Regulatory Certifications

Administrative Procedure Act

The Department finds good cause to make this regulation effective without a 30-day delay in the effective date, pursuant to 5 U.S.C. 553(d), as it relieves a restriction by extending the compliance dates for the title II program accessibility requirements pursuant to 28 CFR 35.150 and the title III barrier removal obligations pursuant to 28 CFR 36.304 as they relate to accessible means of entry into existing swimming pools, wading pools, and spas, from May 21, 2012, until January 31, 2013.

[7] As discussed earlier, the Department issued a Final Rule extending the date for compliance with sections 242 and 1009 of the 2010 Standards as they relate to existing pools (pools built as of March 15, 2012), until May 21, 2012. *See* 77 FR at 16163. However, the regulatory text was not revised.

Executive Order 13563 and Executive Order 12866—Regulatory Planning and Review

This regulation has been drafted and reviewed in accordance with Executive Order 13563, ''Improving Regulation and Regulatory Review,'' and Executive Order 12866, ''Regulatory Planning and Review'' section 1(b), The Principles of Regulation. The Department of Justice has determined that this rule is a ''significant regulatory action'' under Executive Order 12866, section 3(f), and accordingly this rule has been reviewed by the Office of Management and Budget (OMB).

Executive Order 12988—Civil Justice Reform

This rule meets the applicable standards set forth in sections 3(a) and 3(b)(2) of Executive Order 12988.

Executive Order 13132—Federalism

This rule will not have substantial direct effects on the States, on the relationship between the Federal Government and the States, or on distribution of power and responsibilities among the various levels of government. Therefore, in accordance with Executive Order 13132, it is determined that this rule does not have sufficient federalism implications to warrant the preparation of a Federalism Assessment.

Regulatory Flexibility Act

The Attorney General, in accordance with the Regulatory Flexibility Act, 5 U.S.C. 605(b), has reviewed this regulation, and by approving it certifies that it will not have a significant economic impact on a substantial number of small entities. This rule merely extends the compliance dates for the title II program accessibility requirements pursuant to 28 CFR 35.150 and the title III barrier removal obligations pursuant to 28 CFR 36.304 as they relate to accessible means of entry into existing swimming pools, wading pools, and spas. The extension provides regulated entities additional time to evaluate and comply with their program accessibility and readily achievable barrier removal obligations.

Small Business Regulatory Enforcement Fairness Act of 1996

This rule is not a major rule as defined by section 251 of the Small Business Regulatory Enforcement Fairness Act of 1996, 5 U.S.C. 804. This rule will not result in an annual effect on the economy of $100,000,000 or more, a major increase in costs or prices, or significant adverse effects on competition, employment, investment, productivity, innovation, or on the ability of United States-based companies to compete with foreign-based companies in domestic and export markets.

Unfunded Mandates Reform Act of 1995

Section 4(2) of the Unfunded Mandates Reform Act of 1995, 2 U.S.C. 1503(2), excludes from coverage under that Act any proposed or final Federal regulation that ''establishes or enforces any statutory rights that prohibit discrimination on the basis of race, color, religion, sex, national origin, age, handicap, or disability.'' Accordingly, this rulemaking is not subject to the provisions of the Unfunded Mandates Reform Act.

Paperwork Reduction Act of 1995

This rule does not contain any information collection requirements that require approval by OMB under the Paperwork Reduction Act, 44 U.S.C. 3501 *et seq.*

List of Subjects for 28 CFR Parts 35 and 36

Administrative practice and procedure, Buildings and facilities, Civil rights, Communications, Individuals with disabilities, Reporting and recordkeeping requirements, State and local governments, Business and industry.

By the authority vested in me as Attorney General by law, including 28 U.S.C. 509 and 510, 5 U.S.C. 301, and sections 204 and 306 of the Americans with Disabilities Act of 1990, Public Law 101B336 (42 U.S.C. 12134 and 12186), chapter I of title 28 of the Code of Federal Regulations is amended as follows:

PART 35—NONDISCRIMINATION ON THE BASIS OF DISABILITY IN STATE AND LOCAL GOVERNMENT SERVICES

■ 1. The authority citation for part 35 continues to read as follows:

Authority: 5 U.S.C. 301; 28 U.S.C. 509, 510; 42 U.S.C. 12134.

■ 2. In § 35.150, paragraph (b)(4) is added to read as follows:

§ 35.150 Existing facilities.

* * * * *

(b) * * *

(4) *Swimming pools, wading pools, and spas.* The requirements set forth in sections 242 and 1009 of the 2010 Standards shall not apply until January 31, 2013, if a public entity chooses to make structural changes to existing swimming pools, wading pools, or spas built before March 15, 2012, for the sole purpose of complying with the program accessibility requirements set forth in this section.

* * * * *

PART 36—NONDISCRIMINATION ON THE BASIS OF DISABILITY IN PUBLIC ACCOMMODATIONS AND COMMERCIAL FACILITIES

■ 3. The authority citation for part 36 continues to read as follows:

Authority: 5 U.S.C. 301; 28 U.S.C. 509, 510; 42 U.S.C. 12186(b).

■ 4. Amend § 36.304 as follows:

■ a. Revise the Appendix to § 36.304(d), and

■ b. Add paragraph (g)(5), to read as follows:

§ 36.304 Removal of barriers.

* * * * *

(d) * * *

Appendix to § 36.304(d)

COMPLIANCE DATES AND APPLICABLE STANDARDS FOR BARRIER REMOVAL AND SAFE HARBOR

Date	Requirement	Applicable standards
Before March 15, 2012	Elements that do not comply with the requirements for those elements in the 1991 Standards must be modified to the extent readily achievable. **Note:** Noncomplying newly constructed and altered elements may also be subject to the requirements of § 36.406(a)(5).	1991 Standards or 2010 Standards.

COMPLIANCE DATES AND APPLICABLE STANDARDS FOR BARRIER REMOVAL AND SAFE HARBOR—Continued

Date	Requirement	Applicable standards
On or after March 15, 2012	Elements that do not comply with the requirements for those elements in the 1991 Standards or that do not comply with the supplemental requirements (*i.e.,* elements for which there are neither technical nor scoping specifications in the 1991 Standards), must be modified to the extent readily achievable. There is an exception for existing pools, wading pools, and spas built before March 15, 2012 [See § 36.304(g)(5)]. **Note:** Noncomplying newly constructed and altered elements may also be subject to the requirements of § 36.406(a)(5).	2010 Standards.
On or after January 31, 2013	For existing pools, wading pools, and spas built before March 15, 2012, elements that do not comply with the supplemental requirements for entry to pools, wading pools, and spas must be modified to the extent readily achievable [See § 36.304(g)(5)].	Sections 242 and 1009 of the 2010 Standards.
Elements not altered after March 15, 2012.	Elements that comply with the requirements for those elements in the 1991 Standards do not need to be modified.	Safe Harbor.

* * * * *

(g) * * *

(5) With respect to facilities built before March 15, 2012, the requirements in this section for accessible means of entry for swimming pools, wading pools, and spas, as set forth in sections 242 and 1009 of the 2010 Standards, shall not apply until January 31, 2013.

* * * * *

Dated: May 17, 2012.

James M. Cole.

Acting Attorney General.

[FR Doc. 2012–12365 Filed 5–17–12; 4:15 pm]

BILLING CODE 4410–13–P

FEDERAL REGISTER

Vol. 77 Monday,

No. 98 May 21, 2012

Part V

The President

Notice of May 18, 2012—Continuation of the National Emergency With Respect to the Stabilization of Iraq

Federal Register
Vol. 77, No. 98
Monday, May 21, 2012

Presidential Documents

Title 3—

The President

Notice of May 18, 2012

Continuation of the National Emergency With Respect to the Stabilization of Iraq

On May 22, 2003, by Executive Order 13303, the President declared a national emergency protecting the Development Fund for Iraq and certain other property in which Iraq has an interest, pursuant to the International Emergency Economic Powers Act (50 U.S.C. 1701–1706). The President took this action to deal with the unusual and extraordinary threat to the national security and foreign policy of the United States posed by obstacles to the orderly reconstruction of Iraq, the restoration and maintenance of peace and security in the country, and the development of political, administrative, and economic institutions in Iraq.

In Executive Order 13315 of August 28, 2003, Executive Order 13350 of July 29, 2004, Executive Order 13364 of November 29, 2004, and Executive Order 13438 of July 17, 2007, the President modified the scope of the national emergency declared in Executive Order 13303 and took additional steps in response to this national emergency.

Because the obstacles to the orderly reconstruction of Iraq, the restoration and maintenance of peace and security in the country, and the development of political, administrative, and economic institutions in Iraq continue to pose an unusual and extraordinary threat to the national security and foreign policy of the United States, the national emergency declared in Executive Order 13303, as modified in scope and relied upon for additional steps taken in Executive Orders 13315, 13350, 13364, and 13438, must continue in effect beyond May 22, 2012. Therefore, in accordance with section 202(d) of the National Emergencies Act (50 U.S.C. 1622(d)), I am continuing for 1 year the national emergency with respect to the stabilization of Iraq.

This notice shall be published in the *Federal Register* and transmitted to the Congress.

THE WHITE HOUSE,
May 18, 2012.

[FR Doc. 2012–12487
Filed 5–18–12; 2:15 pm]
Billing code 3295–F2–P

Reader Aids

Federal Register

Vol. 77, No. 98

Monday, May 21, 2012

CUSTOMER SERVICE AND INFORMATION

Federal Register/Code of Federal Regulations	
General Information, indexes and other finding aids	**202–741–6000**
Laws	**741–6000**
Presidential Documents	
Executive orders and proclamations	**741–6000**
The United States Government Manual	**741–6000**
Other Services	
Electronic and on-line services (voice)	**741–6020**
Privacy Act Compilation	**741–6064**
Public Laws Update Service (numbers, dates, etc.)	**741–6043**
TTY for the deaf-and-hard-of-hearing	**741–6086**

ELECTRONIC RESEARCH

World Wide Web

Full text of the daily Federal Register, CFR and other publications is located at: **www.fdsys.gov.**

Federal Register information and research tools, including Public Inspection List, indexes, and links to GPO Access are located at: **www.ofr.gov.**

E-mail

FEDREGTOC-L (Federal Register Table of Contents LISTSERV) is an open e-mail service that provides subscribers with a digital form of the Federal Register Table of Contents. The digital form of the Federal Register Table of Contents includes HTML and PDF links to the full text of each document.

To join or leave, go to **http://listserv.access.gpo.gov** and select *Online mailing list archives, FEDREGTOC-L, Join or leave the list (or change settings);* then follow the instructions.

PENS (Public Law Electronic Notification Service) is an e-mail service that notifies subscribers of recently enacted laws.

To subscribe, go to **http://listserv.gsa.gov/archives/publaws-l.html** and select *Join or leave the list (or change settings);* then follow the instructions.

FEDREGTOC-L and **PENS** are mailing lists only. We cannot respond to specific inquiries.

Reference questions. Send questions and comments about the Federal Register system to: **fedreg.info@nara.gov**

The Federal Register staff cannot interpret specific documents or regulations.

Reminders. Effective January 1, 2009, the Reminders, including Rules Going Into Effect and Comments Due Next Week, no longer appear in the Reader Aids section of the Federal Register. This information can be found online at **http://www.regulations.gov.**

CFR Checklist. Effective January 1, 2009, the CFR Checklist no longer appears in the Federal Register. This information can be found online at **http://bookstore.gpo.gov/.**

FEDERAL REGISTER PAGES AND DATE, MAY

25577–25858 1
25859–26148 2
26149–26412 3
26413–26658 4
26659–26910 7
26911–27112 8
27113–27356 9
27357–27560 10
27561–28236 11
28237–28470 14
28471–28756 15
28757–29206 16
29207–29518 17
29519–29852 18
29853–30184 21

CFR PARTS AFFECTED DURING MAY

At the end of each month the Office of the Federal Register publishes separately a List of CFR Sections Affected (LSA), which lists parts and sections affected by documents published since the revision date of each title.

3 CFR

Proclamations:
8805 25859
8806 26645
8807 26647
8808 26649
8809 26651
8810 26653
8811 26655
8812 26657
8813 26907
8814 26909
8815 27555
8816 28759
8817 28761
8818 29519
8819 29525
8820 29527
8821 29529
8822 29531

Executive Orders:
13607 25861
13608 26409
13609 26413
13610 28469
13611 29533

Administrative Orders:
Memorandums:
Memorandum of April 20, 2012 28757
Notices:
Notice of May 10, 2012 27559
Notice of May 18, 2012 30183

5 CFR

213 28226
302 28226
315 28226
330 28226
334 28226
362 28226
531 28226
532 28471
536 28226
537 28226
550 28226
575 28226
733 26659
890 28226
1600 26417
1601 26417
1604 26417
1605 26417
1650 26417
1651 26417
1653 26417
1655 26417
1690 26417
2423 26430
2424 26430
2425 26430
2429 26430

Proposed Rules:
Ch. XXII 28518

7 CFR

205 28472
1208 26911
1485 29474
1728 29537
1755 29537
1942 29537
3203 26660

Proposed Rules:
457 27658
3201 25632

9 CFR

304 26991
381 26991
417 26991
418 26991

Proposed Rules:
1 28799
2 28799
92 29914
93 29914
94 29914
95 29914
96 29914
98 29914
417 27135
424 26706

10 CFR

11 26149
25 26149
73 27561
110 27113
431 ..... 26608, 28928
609 29853

Proposed Rules:
11 26213
25 26213
54 28316
61 26991
Ch. II 28518
429 ..... 28519, 28674, 28805
430 ..... 28519, 28674, 28805
Ch. III 28518
Ch. X 28518

12 CFR

618 25577
1012 26154

Proposed Rules:
404 27140

13 CFR

124 28237

Proposed Rules:
121 ..... 28520, 29130

124 29130
125 29130
126 29130
127 29130

14 CFR

39 ....26154, 26156, 26158, 26663, 26937, 26943, 26945, 26948, 28238, 28240, 29207, 29210, 29212, 29214, 29855, 29857, 29861, 29863
71 ....26160, 28243, 28244, 28245, 28246, 28247, 29865, 29866, 29867, 29868, 29869, 29870, 29871, 29872, 29873, 29874, 29875
91 28247
95 27357
97 ....26667, 26669
117 28763
119 28763
121 28763
1240 27365
Proposed Rules:
16 29250
23 28530
25 28533
39 ....25642, 25644, 25647, 25930, 26216, 26993, 26996, 26998, 27142, 27144, 27659, 27661, 27663, 28328, 29914
43 30054
71 ....27146, 27148, 27149, 27666, 27667, 29916, 29917, 29918, 29920, 29921
91 30054
145 30054

15 CFR

744 28250
Proposed Rules:
742 ....25932, 29564
772 29564
774 ....25932, 29564

16 CFR

Proposed Rules:
20 29922

17 CFR

1 26672
275 28476
Proposed Rules:
1 28819
49 26709
240 27150

18 CFR

35 26674
40 ....26688, 27574
Proposed Rules:
40 26714
284 28331

19 CFR

351 29875

20 CFR

655 28764

21 CFR

179 27586
201 27591
310 27591
510 ....26697, 29216
520 ....28252, 29216
522 ....26161, 26697, 29216
558 ....26161, 29216
600 26162
610 26162
680 26162

22 CFR

62 27593
123 25865
126 25865
Proposed Rules:
121 ....25944, 29575

23 CFR

655 ....28456, 28460

24 CFR

91 28765
576 28765
Proposed Rules:
5 ....26218, 28742
200 26218
207 26218
232 26218
982 28742
983 28742

26 CFR

1 ....26175, 26698, 27669
602 26175
Proposed Rules:
1 27612

27 CFR

Proposed Rules:
9 27001

28 CFR

0 26181
35 30174
36 30174
Proposed Rules:
90 29579

29 CFR

104 25868
4022 28477
Proposed Rules:
1206 28536
2200 27669

30 CFR

915 25868
936 25872
938 25874
1210 25877
1218 ....25877, 25881
Proposed Rules:
943 25949

31 CFR

1 28478
150 29884
Proposed Rules:
Ch. X 27381

32 CFR

236 27615
706 28487
Proposed Rules:
2402 27151

33 CFR

100 ....27115, 27621, 28766
110 25587
117 ....25590, 25591, 25592, 25889, 25890, 26437, 27115, 27624, 28488, 28767, 29895, 29897
165 ....25592, 25595, 25890, 25892, 26699, 27116, 27118, 27120, 27123, 27621, 27625, 28253, 28255, 28766, 28769, 28770, 28771, 29898, 29899, 29901
Proposed Rules:
100 ....25650, 28538
117 ....25653, 25655, 29924, 29927
162 ....27007, 28825
165 ....27156, 27159, 27381, 29251, 29254, 29929, 29932
334 ....25952, 26229

34 CFR

690 25893
Proposed Rules:
Ch. VI 25658

37 CFR

Proposed Rules:
1 ....28331, 28541
41 28331
202 29257
385 29259

38 CFR

17 28258
51 26183
Proposed Rules:
4 27009

39 CFR

20 28488
111 ....26185, 27125, 28259
233 25596

40 CFR

9 29168
50 ....28424, 30160
51 ....28424, 28772, 30160
52 ....25901, 26438, 26441, 26444, 26448, 27626, 28261, 28264, 28489, 28491, 28782, 29540, 29904
81 ....26950, 28424, 30088
82 29218
97 28785
136 29540
141 26072
142 26072
180 ....25903, 25904, 26450, 26456, 26462, 26467, 26954, 27126, 27130, 27628, 28266, 28270, 28276, 28493, 29543, 29548
260 29758
272 29231
300 27368
423 29758
430 29758
435 29758
449 29168
799 28281
Proposed Rules:
52 ....25660, 25953, 26474, 26475, 27162, 27671, 28336, 28338, 28543, 28825, 29270, 29581, 29586
60 26476
98 29935
131 29271
147 26231
180 ....25661, 25954, 26477, 27164
272 29275
799 28340

42 CFR

Ch. IV 29002
441 26828
482 29034
485 29034
Proposed Rules:
412 27870
413 27870
424 27870
430 ....26232, 26362
431 ....26232, 26362
435 ....26232, 26362
436 ....26232, 26362
438 27671
440 ....26232, 26362
441 ....26232, 26362, 27671
447 ....26232, 26362, 27671
476 27870
489 27870

43 CFR

Proposed Rules:
3160 27691

44 CFR

64 ....28282, 29552
67 ....26959, 26968
206 28786

45 CFR

153 29235
158 ....28788, 28790
Proposed Rules:
171 28543

47 CFR

11 26701
12 28797
15 29236
51 26987
54 ....25609, 26987
73 27631
90 28797
Proposed Rules:
1 29275

48 CFR

1 ....27546, 27551
9 27547
25 27548
30 27550
52 ....27547, 27548, 27550
Proposed Rules:
2 26232
22 26232
31 29305
52 26232

49 CFR

40 26471
Ch. II 25610
228 26703
231 26703
236 28285
350 ....28448, 28451
384 26989

385 .....26989, 28448, 28451
395.....28448, 28451
396.....28448
571.....29247
1152.....25910
Proposed Rules:
219.....29307
544.....28343
661.....26723, 29953
1333.....27384

50 CFR
17.....25611, 26191
223.....29905
226.....25611
424.....25611
622 .....27374, 28305, 28308, 29555
635.....28496
648 .....25623, 25630, 26104, 26129, 26704, 28311
660.....25915, 28497
679.....26212, 29556
Proposed Rules:
13.....27174, 28347
17 .....25664, 25668, 25792, 27010, 27386, 27403, 28347, 28704, 28846, 29078
20.....29516
22.....27174
223 .....26478, 27411, 29586
224.....26478
402.....28347
600.....26238
635.....25669
640.....28560
648.....27175
660.....29955
679.....29961

LIST OF PUBLIC LAWS

This is a continuing list of public bills from the current session of Congress which have become Federal laws. It may be used in conjunction with "P L U S" (Public Laws Update Service) on 202–741–6043. This list is also available online at *http://www.archives.gov/federal-register/laws*.

The text of laws is not published in the **Federal Register** but may be ordered in "slip law" (individual pamphlet) form from the Superintendent of Documents, U.S. Government Printing Office, Washington, DC 20402 (phone, 202–512–1808). The text will also be made available on the Internet from GPO's Federal Digital System (FDsys) at *http://www.gpo.gov/fdsys*. Some laws may not yet be available.

H.R. 298/P.L. 112–107

To designate the facility of the United States Postal Service located at 500 East Whitestone Boulevard in Cedar Park, Texas, as the "Army Specialist Matthew Troy Morris Post Office Building". (May 15, 2012; 126 Stat. 328)

H.R. 1423/P.L. 112–108

To designate the facility of the United States Postal Service located at 115 4th Avenue Southwest in Ardmore, Oklahoma, as the "Specialist Michael E. Phillips Post Office". (May 15, 2012; 126 Stat. 329)

H.R. 2079/P.L. 112–109

To designate the facility of the United States Postal Service located at 10 Main Street in East Rockaway, New York, as the "John J. Cook Post Office". (May 15, 2012; 126 Stat. 330)

H.R. 2213/P.L. 112–110

To designate the facility of the United States Postal Service located at 801 West Eastport Street in Iuka, Mississippi, as the "Sergeant Jason W. Vaughn Post Office". (May 15, 2012; 126 Stat. 331)

H.R. 2244/P.L. 112–111

To designate the facility of the United States Postal Service located at 67 Castle Street in Geneva, New York, as the "Corporal Steven Blaine Riccione Post Office". (May 15, 2012; 126 Stat. 332)

H.R. 2660/P.L. 112–112

To designate the facility of the United States Postal Service located at 122 North Holderrieth Boulevard in Tomball, Texas, as the "Tomball Veterans Post Office". (May 15, 2012; 126 Stat. 333)

H.R. 2668/P.L. 112–113

Brian A. Terry Memorial Act (May 15, 2012; 126 Stat. 334)

H.R. 2767/P.L. 112–114

To designate the facility of the United States Postal Service located at 8 West Silver Street in Westfield, Massachusetts, as the "William T. Trant Post Office Building". (May 15, 2012; 126 Stat. 336)

H.R. 3004/P.L. 112–115

To designate the facility of the United States Postal Service located at 260 California Drive in Yountville, California, as the "Private First Class Alejandro R. Ruiz Post Office Building". (May 15, 2012; 126 Stat. 337)

H.R. 3246/P.L. 112–116

To designate the facility of the United States Postal Service located at 15455 Manchester Road in Ballwin, Missouri, as the "Specialist Peter J. Navarro Post Office Building". (May 15, 2012; 126 Stat. 338)

H.R. 3247/P.L. 112–117

To designate the facility of the United States Postal Service located at 1100 Town and Country Commons in Chesterfield, Missouri, as the "Lance Corporal Matthew P. Pathenos Post Office Building". (May 15, 2012; 126 Stat. 339)

H.R. 3248/P.L. 112–118

To designate the facility of the United States Postal Service located at 112 South 5th Street in Saint Charles, Missouri, as the "Lance Corporal Drew W. Weaver Post Office Building". (May 15, 2012; 126 Stat. 340)

S. 1302/P.L. 112–119

To authorize the Administrator of General Services to convey a parcel of real property in Tracy, California, to the City of Tracy. (May 15, 2012; 126 Stat. 341)

Last List April 12, 2012

Public Laws Electronic Notification Service (PENS)

PENS is a free electronic mail notification service of newly enacted public laws. To subscribe, go to *http://listserv.gsa.gov/archives/publaws-l.html*

Note: This service is strictly for E-mail notification of new laws. The text of laws is not available through this service. **PENS** cannot respond to specific inquiries sent to this address.